SONY

EDITSTATION

ES-7

BASIC DME SWITCHER BOARD
ESBK-7021

3D EFFECT BOARD FOR BASIC DME SWITCHER
ESBK-7022

ADVANCED DME SWITCHER BOARD
ESBK-7023

3D EFFECT BOARD FOR ADVANCED DME SWITCHER
ESBK-7024

EXTERNAL SWITCHER INTERFACE BOARD
ESBK-7025

QSDI INTERFACE BOARD
ESBK-7031

SDI INTERFACE BOARD
ESBK-7032

DISK RECORDER BOARD
ESBK-7041

SCSI OPTION
ESBK-7051

ETHERNET OPTION
ESBK-7052

ESDRAW
ESBK-7071

SERVICE MANUAL

1st Edition

EDIT STATION™

SAFETY CHECK-OUT

After correcting the original service problem, perform the following safety checks before releasing the set to the customer :

Check the metal trim, "metallized" knobs, screws, and all other exposed metal parts for AC leakage. Check leakage as described below.

LEAKAGE TEST

The AC leakage from any exposed metal part to earth ground and from all exposed metal parts to any exposed metal part having a return to chassis, must not exceed 0.5 mA (500 microampers). Leakage current can be measured by any one of three methods.

1. A commercial leakage tester, such as the Simpson 229 or RCA WT-540A. Follow the manufacturers' instructions to use these instruments.

2. A battery-operated AC milliammeter. The Data Precision 245 digital multimeter is suitable for this job.

3. Measuring the voltage drop across a resistor by means of a VOM or battery-operated AC voltmeter. The "limit" indication is 0.75 V, so analog meters must have an accurate low-voltage scale. The Simpson 250 and Sanwa SH-63Trd are examples of a passive VOM that is suitable. Nearly all battery operated digital multimeters that have a 2 V AC range are suitable. (See Fig. A)

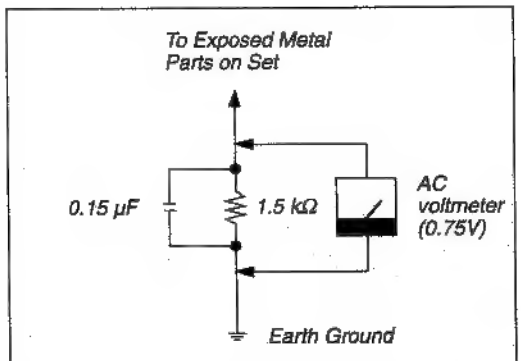

Fig A. Using an AC voltmeter to check AC leakage.

このマニュアルに記載されている事柄の著作権は当社にあり，説明内容は機器購入者の使用を目的としています。
従って，当社の許可なしに無断で複写したり，説明内容(操作，保守等)と異なる目的で本マニュアルを使用することを禁止します。

The material contained in this manual consists of information that is the property of Sony Corporation and is intended solely for use by the purchasers of the equipment described in this manual.
Sony Corporation expressly prohibits the duplication of any portion of this manual or the use thereof for any purpose other than the operation or maintenance of the equipment described in this manual without the express written permission of Sony Corporation.

Le matériel contenu dans ce manuel consiste en informations qui sont la propriété de Sony Corporation et sont destinées exclusivement à l'usage des acquéreurs de l'équipement décrit dans ce manuel.
Sony Corporation interdit formellement la copie de quelque partie que ce soit de ce manuel ou son emploi pour tout autre but que des opérations ou entretiens de l'équipement à moins d'une permission écrite de Sony Corporation.

Das in dieser Anleitung enthaltene Material besteht aus Informationen, die Eigentum der Sony Corporation sind, und ausschließlich zum Gebrauch durch den Käufer der in dieser Anleitung beschriebenen Ausrüstung bestimmt sind.
Die Sony Corporation untersagt ausdrücklich die Vervielfältigung jeglicher Teile dieser Anleitung oder den Gebrauch derselben für irgendeinen anderen Zweck als die Bedienung oder Wartung der in dieser Anleitung beschriebenen Ausrüstung ohne ausdrückliche schriftliche Erlaubnis der Sony Corporation.

MANUAL STRUCTURE

Purpose of this manual

This manual is the Service Manual of the Edit Station ES-7 and the following option boards.

Basic DME switcher board	: ESBK-7021
3D effect board for basic DME switcher	: ESBK-7022
Advanced DME switcher board	: ESBK-7023
3D effect board for advanced DME switcher	: ESBK-7024
Externel switcher interface board	: ESBK-7025
QSDI interface board	: ESBK-7031
SDI interface board	: ESBK-7032
Disk recorder board	: ESBK-7041
SCSI option	: ESBK-7051
Ethernet option	: ESBK-7052
ES Draw	: ESBK-7071

This manual describes the servicing information for blocks and boards replacements of the equipment.

Contents

The sections covered in the manual are summarized below to give you a general understanding of the manual.

Section 1 OPERATING INSTRUCTIONS

Describes and the contents of the operating instructions related to the operations.

Section 2 SERVICE OVERVIEW

Describes the external cabinet removal procedures during servicing, location of the main parts, board removal procedures, switch setting, notes and so on.

Section 3 DIAGNOSTICS FUNCTION

Describes the information related to when the system experiences a problem.

Section 4 ELECTRICAL ALIGNMENTS

Describes the electrical adjustments of each board.

Section 5 BLOCK DIAGRAMS

Illustrates the block diagrams which show each board function and signal flow, and describes outlines of the circuits.

Section 6 FRAME DIAGRAMS & BOARD LAYOUTS

Shows the schematic diagram and board layouts of the follwing boards.
FP-74 board, LE-154 board, MB-639 board, CN-1237/1238/1242 board.

Section 7 SPARE PARTS & OPTIONAL FIXTURES

Describes the blocks, boards and mechanical parts.

Ethernet is a registered trademark of FUJI XEROX CO., LTD.

Related Manuals

In addition to this Service Manual, the following operating instructions and manuals are provided.

- **Service Manual (Not supplied with each equipment)**
  Part No. 9-977-662-01 <ESBK-7011>
  Part No. 9-977-663-01 <ESBK-7045>
  Describes the servicing information for blocks and boards replacements of the equipment.

- **Factory Service Manual (Not supplied with each equipment)**
  Part No. 9-977-661-01 <ES-7/ESBK-7021/ESBK-7022/ESBK-7023/ESBK-7024/
  ESBK-7025/ESBK-7031/ESBK-7032/ESBK-7041/
  ESBK-7051/ESBK-7052/ESBK-7071>
  Describes the information (block diagrams, schematic diagrams, board layouts, semiconductor pin assignments and parts lists etc.) on service and covers information on parts.

- **Operating Instructions (Supplied with each equipment)**
  Part No. 3-856-429-11 <ES-7 English>
  Part No. 3-856-429-21 <ES-7 French>
  Part No. 3-856-429-31 <ES-7 German>
  Part No. 3-856-422-01 <ESBK-7011 English/French/German>
  Part No. 3-856-431-01 <ESBK-7021/7022/7023/7024/7025/7031/7032/7041
  English/ Franch/German>
  Part No. 3-858-088-01 <ESBK-7045 English/French/German>
  Part No. 3-856-427-01 <ESBK-7051 English/ French/German>
  Part No. 3-858-273-01 <ESBK-7052 English/French/German>
  Part No. 3-856-854-01 <ESBK-7071 English/French/German>
  Part No. 3-856-430-01 <RMM-ES7 English/French/German>
  Part No. 3-858-087-01 <RMM-ES701 English/French/German>
  Describes the information for the application and operation of each equipment.

- **ES Draw Operation Manual ESBK-7092E (Not supplied with ESBK-7071)**
  Describes the detailed information about how to use ESDraw ESBK-7071.

- **Online Manual (Supplied on CD-ROM) and Operation Manual ESBK-7091E (Not supplied with ES-7)**
  The Operation Manual ESBK-7091E is a printed version of a CD-ROM disk that contains an online manual.
  Describes the detailed instructions about how to operate the Edit Station and the details of operation and installation which are not covered in the Operation Instructions.

TABLE OF CONTENTS

1. OPERATING INSTRUCTION

2. SERVICE INFORMATION

2-1. INSTALLATION 2-1
2-1-1. Installation 2-1
2-1-2. RACK-MOUNTING 2-1
2-2. CONNECTING SYSTEM COMPONENTS 2-3
2-2-1. Connecting VCRs 2-3
2-2-2. Connecting ESBK-7045 Disk Units 2-6
2-2-3. Connecting Computer Peripherals 2-7
2-2-4. Connecting Video/Audio Monitors and Audio Equipment 2-8
2-2-5. Connecting an External DME Switcher 2-9
2-3. Connector 2-11
2-3-1. Connectors 2-11
2-3-2. Connector Input/Output Signal 2-13
2-4. SWITCHES/JUMPERS/LEDS 2-20
2-4-1. ES-7 2-20
2-4-2. ESBK-7021 2-23
2-4-3. ESBK-7031 2-23
2-4-4. ESBK-7032 2-24
2-4-5. ESBK-7045 2-25
2-5. Location of Main Parts 2-26
2-5-1. Location of Main Parts 2-26
2-5-2. Board Layouts 2-27
2-6. CABINET REMOVAL 2-29
2-7. PARTS REPLACEMENT 2-30
2-7-1. Floppy Disk Drive/CD ROM Drive Replacement 2-30
2-7-2. Hard Disk Drive Replacement 2-31
2-7-3. Power Block (RE-122 Board) Replacement 2-32
2-7-4. Fuse Replacement 2-33
2-7-5. DC Fan Replacement 2-33
2-7-6. AU-217 Board Replacement 2-33
2-7-7. MB-639 Board Replacement 2-34
2-7-8. PC Main Board Replacement/Adjustment .. 2-35
2-7-9. Flash Memory Replacement 2-42
2-7-10. Lithium Battery Replacement 2-42
2-8. Notes on Spare Parts 2-43
2-8-1. Notes on Spare Parts 2-43
2-8-2. Replacement of Chip Parts 2-43
2-8-3. Removal of PLCC IC 2-44
2-8-4. Power Supplied Cord for CE 2-45

3. DIAGNOSIS FUNCTION

3-1. OVERVIEW 3-1
3-2. FUNCTION 3-1
3-3. DIAGNOSIS PROCEDURES 3-1
3-3-1. Start-up/End of Diagnosis Program (SelfDiag) 3-1
3-3-2. Diagnosis on the Block Basis 3-4

4. ELECTRICAL ALIGNMENT

4-1. ADJUSTMENT SEQUENCE 4-1
4-2. ADJUSTMENT PREPARATIONS 4-3
4-2-1. Connection 4-3
4-2-2. Tools/Measuring Equipments 4-5
4-2-3. Built-in Color Bars 4-5
4-2-4. Layout of Adjustment Controls 4-8
4-3. DA-95 BOARD ADJUSTMENT 4-10
4-3-1. GEN LOCK Adjustment 4-10
4-3-2. COMPONENT RGB MATRIX LEVEL BALANCE Adjustment 4-12
4-3-3. PROGRAM OUTPUT G GAIN Adjustment 4-13
4-3-4. PROGRAM OUTPUT R GAIN Adjustment 4-13
4-3-5. PROGRAM OUTPUT B GAIN Adjustment 4-14
4-3-6. PROGRAM OUTPUT COMPONENT Y GAIN Adjustment 4-15
4-3-7. PROGRAM OUTPUT COMPONENT R-Y GAIN Adjustment 4-16
4-3-8. PROGRAM OUTPUT COMPONENT B-Y GAIN Adjustment 4-17
4-3-9. Y/R-Y DELAY Adjustment 4-18
4-3-10. Y/B-Y DELAY Adjustment 4-18
4-3-11. COMPOSITE SC LEAK BALANCE Adjustment 4-19
4-3-12. COMPOSITE CHROMA GAIN Adjustment 4-20
4-3-13. COMPOSITE Y GAIN Check 4-22
4-3-14. COMPOSITE BURST GAIN Adjustment 4-23
4-3-15. INT SC PHASE Adjustment 4-24
4-3-16. EXT SC PHASE Adjustment 4-26
4-3-17. INT SC FREQUENCY Adjustment 4-28
4-3-18. S-VIDEO COMPONENT Y GAIN Check 4-29
4-3-19. S-VIDEO CHROMA GAIN Adjustment ... 4-31
4-3-20. EXT SC-H Adjustment (B B OUT) 4-33
4-3-21. INT SC-H Adjustment (B B OUT) 4-35
4-3-22. B B OUTPUT GAIN Adjustment 4-37
4-3-23. SYNC OUT LEVEL Adjustment 4-38
4-4. DAC-20 BOARD ADJUSTMENT 4-39
4-4-1. COMPONENT RGB MATRIX LEVEL BALANCE Adjustment 4-39

4-4-2. MONITOR OUTPUT G GAIN Adjustment 4-40
4-4-3. MONITOR OUTPUT R GAIN Adjustment 4-40
4-4-4. MONITOR OUTPUT B GAIN Adjustment 4-41
4-4-5. MONITOR OUTPUT COMPONENT Y GAIN Adjustment 4-42
4-4-6. MONITOR OUTPUT COMPONENT R-Y GAIN Adjustment 4-43
4-4-7. MONITOR OUTPUT COMPONENT B-Y GAIN Adjustment 4-44
4-4-8. Y/R-Y DELAY Adjustment 4-45
4-4-9. Y/B-Y DELAY Adjustment 4-45
4-5. AD-115 BOARD ADJUSTMENT 4-46
4-5-1. COMPONENT Y LEVEL Adjustment 4-46
4-5-2. COMPONENT CHROMA LEVEL Adjustment 4-48
4-5-3. W HD PHASE Adjustment 4-50
4-5-4. COMPONENT Y/C DELAY Adjustment 4-52
4-5-5. AUX COMPONENT Y LEVEL Adjustment 4-53
4-5-6. AUX COMPONENT CHROMA LEVEL Adjustment 4-55
4-5-7. Y/C Input Y LEVEL Adjustment 4-57
4-5-8. CHROMA DECODER CLOCK FREQUENCY Adjustment 4-59
4-5-9. Y/C CHROMA LEVEL Adjustment 4-61
4-5-10. APC LOCK Adjustment 4-63
4-5-11. COMPOSITE Y LEVEL Adjustment 4-65
4-6. AU-217 BOARD ADJUSTMENT 4-67
4-6-1. PLAYER/AUX INPUT LEVEL Adjustment 4-67
4-6-2. RECORDER INPUT LEVEL Adjustment 4-68
4-6-3. LINE OUT LEVEL Adjustment 4-69

5. BLOCK DIAGRAMS

5-1. OVERALL 5-1
5-2. Operations/Functions of Circuit Boards 5-3
5-2-1. ANALOG VIDEO Input/Output 5-3
5-2-2. AUDIO 5-3
5-2-3. SYSTEM CONTROL 5-3
5-2-4. GRAPHICS BOARD 5-4
5-2-5. CPU BLOCK 5-4
5-2-6. POWER SUPPLY 5-4
5-2-7. MISCELLANEOUS 5-4
5-2-8. DME SW'ER OPTION 5-5
5-2-9. NON-LINEAR OPTION 5-6
5-2-10. DIGITAL I/O OPTION 5-6
5-2-11. ES DRAW 5-6

6. FRAME WIRING & BOARD LAYOUTS

FRAME WIRING
CN-1237 6-2
CN-1238 6-2
CN-1242 6-2
FP-74 6-2
LE-154 6-2
MB-639 6-10
BOARD LAYOUTS
CN-1237 6-25
CN-1238 6-24
CN-1242 6-24
FP-74 6-24
LE-154 6-24
MB-639 6-22

7. SPARE PARTS AND OPTIONAL FIXTURES

7-1. NOTES ON SPARE PARTS 7-1
7-2. EXPLODED VIEWS 7-2
7-3. ELECTRICAL PARTS LIST 7-14

Table of Contents

Chapter 1

Overview

Features 7
Contents of the Package 8
System Configuration 9
Analog Hybrid Editing System 9
Digital Hybrid Editing System 10
Digital Non-Linear Editing System 11
Analog Linear Editing System 12
Analog Linear Editing System With External Switcher 13
Optional Components and Software 14
Optional System Upgrade Devices 14
Optional Expansion Boards 14
Optional Software Products 15
Related Manuals 15

Chapter 2

Introduction to Editing Operations

Starting and Shutting Down the System 17
Starting the System 17
Using the Mouse 20
Using the Keyboard 22
Using Windows 24
Shutting Down the System 26
The Basics of Editing With EditStation 28
Reference Editing System 28
The Flow of an Editing Session 29
Starting EditStation 30
Identifying Parts of the EditStation Initial Screen 32
Preparing a Master Tape 33
Creating Video Clips 34
Copying Video Clips to the Disk Recoder 38
Editing With Cut Transitions 39
Previewing the Edit Results 40
Adjusting Edit Points 42
Adding Wipe Effects 45
Adding Fade-in and Fade-out Effects 48

(Continued)

Chapter 2

Introduction to Editing Operations

(Continued)

Inserting a Title 52
Recording the Edit Results 58
Saving the Edit File 59
Using the Online Manual 60
Exiting EditStation 63

Chapter 3

Connections and Settings

Arranging System Components 65
Using Floppy Disks 66
Using CD-ROM Discs 68
Connecting System Components 69
Connecting VCRs 69
Connecting ESBK-7045 Disk Units 72
Connecting Computer Peripherals 73
Connecting Video/Audio Monitors and Audio Equipment 74
Connecting an External DME Switcher 75
Installing Optional Boards 77
Installing Expansion Boards on the Motherboard 78
Installing Daughter Boards 82
Installing Expansion Boards in ISA Slots 86
Connectable Video and Audio Equipment 87
Setting the Video Signal Format 88
Setting the Date and Time 89
Reinstalling the Software 90
Registering User Names and Passwords 91
Executing the Self Diagnostics 93
Pin Assignments 94
GPI Pin Assignments 94
Computer Connector Section Pin Assigments 94

SECTION 1
OPERATING INSTRUCTION

This section is extracted from operation manual.

Chapter 4

Location and Function of Parts

Front Panel **97**
Rear Panel **98**
Common Section 98
Connector Sections 99

Appendixes

Error Messages **107**
Precautions **108**
Maintaining the Performance of This Unit 108
Protecting Data on the Hard Disk 108
Handling CD-ROM Discs 108
Handling Floppy Disks 109
Menu Reference **111**
When the Clip Bin Window Is the Active Window 111
When the Timeline Window Is the Active Window 112
Specifications **114**
Glossary **117**

Index **118**

Features

The ES-7 EditStation™ is a video editing system that includes as built-in equipment all of the devices required for video editing. Powerful editing software running under the pre-installed Microsoft Windows NT[1] operating system provides a graphical user interface that allows you to perform linear editing of video materials on tape and non-linear editing of materials on a disk recorder.[2] The combination of easy-to-use editing software and expansion board developed especially for the EditStation enables the EditStation to function as an A/B roll editing system, video switcher, digital multi-effects, audio mixer, titler, and drawing platform. It supports a rich variety of analog and digital video signal formats and features a high-speed digital transfer function that enables you to transfer video data between the disk recorder and DSR-series VCRs at four times normal speed with no loss in video quality.

High-quality video compression

Dynamic video compression provides efficient storage of digital signals on the disk recorder. The compression ratio is adjusted to accommodate the amount of information in the data while preserving high video quality.

High-speed uploads and downloads

You can copy edit materials from DSR-series VCRs to the EditStation disk recorder (upload) and copy edit results from the EditStation disk recorder to DSR-series VCRs (download) at four times normal speed. The EditStation and DSR-series VCRs share a common internal format, eliminating the need for compression and decompression during uploads and downloads. This eliminates the deterioration in video quality which can result from copy operations.

Many advanced special effect functions

Optional special effects expansion boards with built-in video switcher functions are available to provide more than 300 high-quality special effects in real time. Installation of an additional optional expansion board provides advanced non-linear three-dimensional effects such as lighting, which depicts the object as if illuminated by a light source, and trail, which produces a trail across the video image.

Convenient graphics tools

Optional drawing software and an expansion board for drawing functions are available to provide superimposed graphics on video signals. This allows you to create graphics while checking the effect on the monitor. Lettering is provided by standard EditStation software (Text Composer) that can be used from the editing screen. This allows you to create titles and other lettering without the need to acquire a separate character generator. A file converter is also provided as a standard feature, allowing you to convert graphics data created with Photoshop[3] and other graphics applications for use with this unit.

High-quality audio signal processing

The system features a digital audio mixer as standard equipment. If you install the optional digital input/output board, you can perform input and output of video and audio signals in completely digital formats. High-quality recording of analog audio input signals is also possible.

1) Windows NT is a trademark of Microsoft Corporation.
2) The disk recorder is a combination of the ESBK-7041 Disk Recorder Board and one or more ESBK-7045 Disk Units.
3) Photoshop is a registered trademark of Adobe Systems Incorporated.

Support for DSR-series VCRs

The EditStation can read and perform high-speed editing of MARK IN edit point video and MARK IN and MARK OUT edit point timecode recorded with DSR-series camcorders. You can use DSR-series VCRs to upload video from tape to the EditStation's disk recorder in the background while performing other editing tasks.

Easy operation

You can check the sequence of video clips in your EDL (Edit Decision List) in a single glance at the display on the computer monitor. Compared to conventional character-based systems, the visual display makes EDL operations easy and intuitive. You can move or insert video clips through simple drag-and-drop operations with the mouse, eliminating the need to learn complicated commands.

Compatible with wide variety of analog and digital systems

You can mix both analog and digital equipment in the same editing system, and combine linear and non-linear editing. This makes it easy to begin with an inexpensive analog editing system and upgrade it by adding digital and non-linear components.

Control panel

An optional control panel is available, featuring a jog/shuttle dial, a fader lever and other editing controls. Use of the control panel makes it easy to control VCR tape transport and perform fine adjustments of edit points.

Contents of the Package

The ES-7 EditStation package contains the following.

- ES-7 main unit (1)
- Power cord (1)
- Keyboard (1)
- Mouse (1)
- Extension cable for keyboard/mouse, length 4 m (2)
- Parallel GPD D-sub 15-pin connector (1)
- Software and online manual (CD-ROM disc) (1)
- Windows NT package (CD-ROM disc and manuals) (1)
- Operating Instructions (this manual) (1)
- Software License Agreement (1)
- User registration card (1)

System Configuration

You can configure a variety of editing systems around the ES-7 EditStation. The main types are as follows.

- Analog hybrid editing system
- Digital hybrid editing system
- Digital non-linear editing system
- Analog linear editing system

The following sections show how each type of editing system is configured.

Analog Hybrid Editing System

As the video switcher, this system employs the optional ESBK-7021 Basic DME Switcher Board or ESBK-7023 Advanced DME Switcher Board. As the three-dimensional effects processor, it employs the optional ESBK-7022 3D Effect Board for Basic DME Switcher or ESBK-7024 3D Effect Board for Advanced DME Switcher.
The configuration includes two analog player VCRs and one analog recorder VCR. This enables hybrid editing, which is the application of special effects while switching between video stored on the disk recorder and video stored on tape.

For editing with a large number of short cuts, video clips can be copied from tape to the disk redorder. This improves editing efficiency by taking advantage of the rapid cue-up times for clips stored on disk. Longer cuts can be recorded directly from tape, saving the time required to copy clips to the disk recorder. Depending on the materials and contents of the edit, you can choose whichever method is most efficient.
The results of the edit are recorded on tape by the recorder VCR. The MO drive is used to store and access edit data.

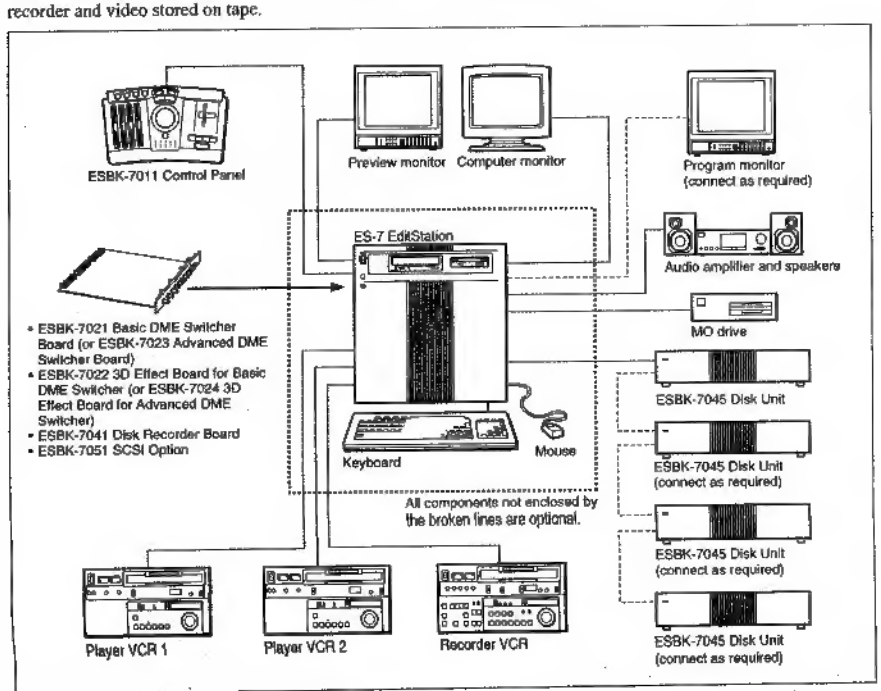

Analog hybrid editing system

Digital Hybrid Editing System

As the video switcher, this system employs the optional ESBK-7021 Basic DME Switcher Board or ESBK-7023 Advanced DME Switcher Board. As the three-dimensional effects processor, it employs the optional ESBK-7022 3D Effect Board for Basic DME Switcher or ESBK-7024 3D Effect Board for Advanced DME Switcher.

The configuration includes DSR-series or digital Betacam player and recorder VCRs. This enables hybrid editing, which is the application of special effects while switching between video stored on the disk recorder and video stored on tape.
The results of the edit are recorded on tape as digital data by a digital VCR. The MO drive is used to store and access edit data.

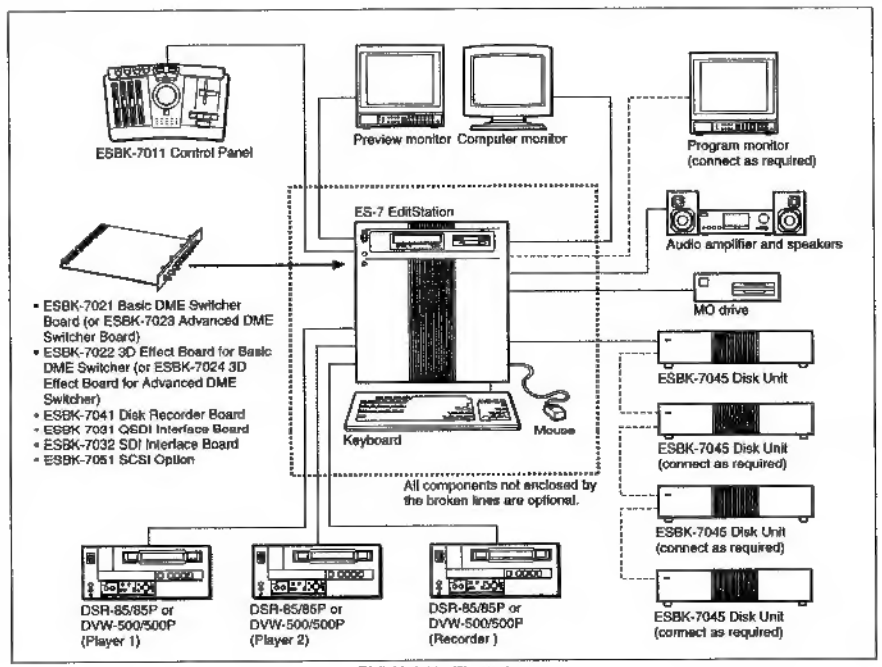

Digital hybrid editing system

Digital Non-Linear Editing System

As the video switcher, this system employs the optional ESBK-7021 Basic DME Switcher Board or ESBK-7023 Advanced DME Switcher Board. As the three-dimensional effects processor, it employs the optional ESBK-7022 3D Effect Board for Basic DME Switcher or ESBK-7024 3D Effect Board for Advanced DME Switcher.

A DSR-series digital VCR is connected as the recorder. Materials for editing are uploaded from the digital VCR to the system's hard disks at four times normal speed. Editing is non-linear, employing data stored on the disk recorder. The results of the edit are downloaded to the digital VCR at four times normal speed. The MO (magneto-optiocal disk) drive is used to store and access edit data.

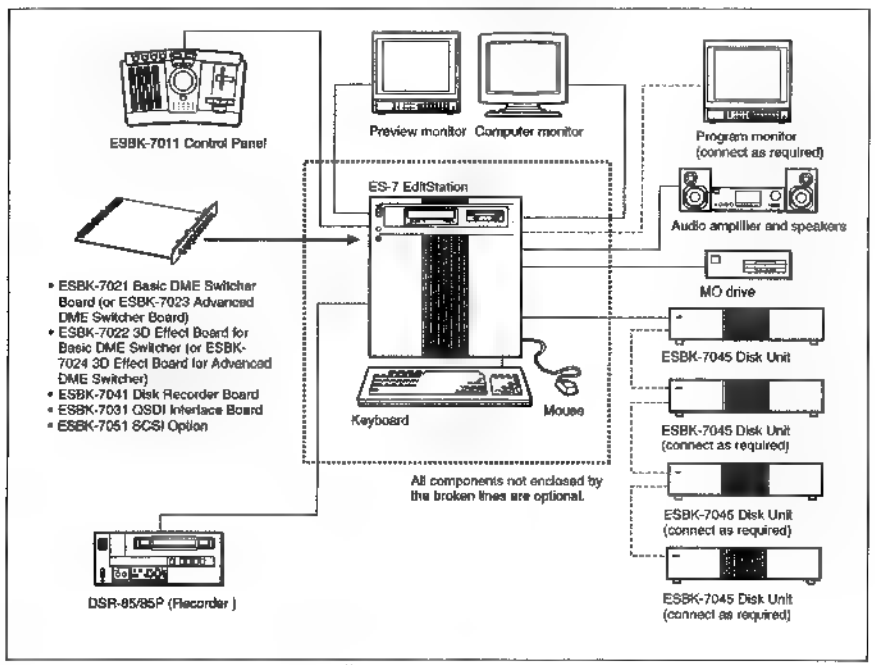

Digital non-linear editing system

Analog Linear Editing System

As the video switcher, this system employs the optional ESBK-7021 Basic DME Switcher Board or ESBK-7023 Advanced DME Switcher Board. As the three-dimensional effects processor, it employs the optional ESBK-7022 3D Effect Board for Basic DME Switcher or ESBK-7024 3D Effect Board for Advanced DME Switcher.

Two analog VCRs are connected as players, and one analog VCR is connected as the recorder. This system permits tape-based linear editing only. The results of the edit are recorded on tape by the recorder. The MO drive is used to store and access edit data.

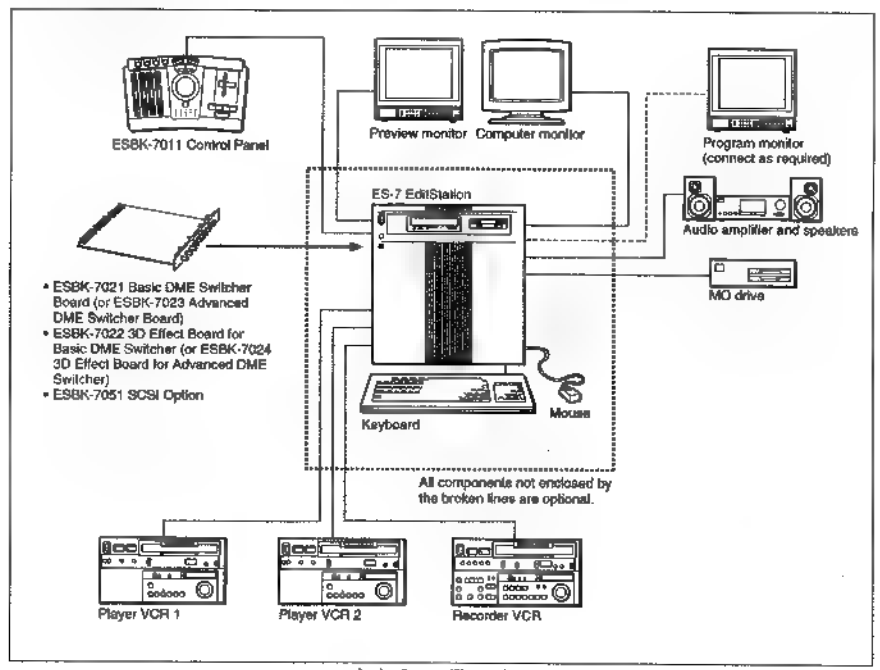

Analog linear editing system

Analog Linear Editing System With External Switcher

If you already own a DFS-300/300P or DFS-500/500P DME Switcher, you can combine the EditStation and your current switcher.
This system employs a DFS-300/300P or DFS-500/500P DME Switcher as the video switcher and effects processor. Two analog VCRs are connected ■ players, and one analog VCR is connected as the recorder. This system permits tape-based linear editing only.

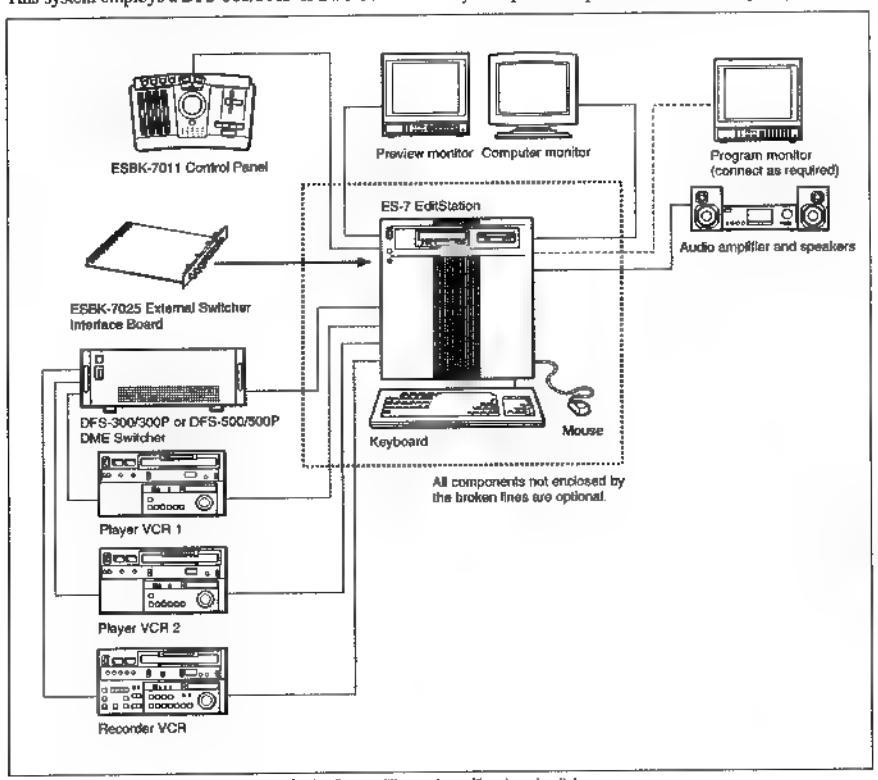

Analog linear editing system with external switcher

Optional Components and Software

Optional System Upgrade Devices

ESBK-7045 Disk Unit

This is a hard disk drive for storage of video and audio signals. The fast random access of the hard disk means that any part of the data can be accessed quickly. Unlike clips stored on tape, clips stored on a disk unit can be cued up instantly. In high-quality mode, one disk unit can store up to one hour of video. Up to four disk units can be connected to the EditStation.

ESBK-7041 Disk Recorder Board

This board installs in a slot on the motherboard of the EditStation. It controls the ESBK-7045 Disk Unit and enables non-linear editing using data on the disk unit.

ESBK-7011 Control Panel

This is a control panel for the EditStation featuring a jog/shuttle dial, a fader lever, adjustment knobs, MARK IN and MARK OUT buttons, and other editing controls. Use of the control panel makes it easy to control tape transport, adjust edit points, and manually specify the timing of edit transitions.

Optional Expansion Boards

ESBK-7021 Basic DME Switcher Board

This is a set of two expansion boards that install in slots on the motherboard of the EditStation. The boards provide video and audio switcher functions and two-dimensional DME (Digital Multi-Effects) functions. They also provide color correction, a downstream keyer, and a chroma key function.

ESBK-7022 3D Effect Board for Basic DME Switcher

This is a daughter board that installs on the Basic DME Switcher Board. It provides linear and non-linear three-dimensional special effects.

ESBK-7023 Advanced DME Switcher Board

This is a set of two expansion boards that install in slots on the motherboard of the EditStation. The boards provide video and audio switcher functions and two-dimensional DME (Digital Multi-Effects) functions. They also provide color correction, a downstream keyer, and a chroma key function. Compared to the Basic DME Switcher Board, these boards provide even higher picture quality, enabling the addition of a wide variety of advanced special effects.

ESBK-7024 3D Effect Board for Advanced DME Switcher

This is a daughter board that installs on the Advanced DME Switcher Board. ■ provides linear and non-linear three-dimensional special effects.
■ also provides lighting and trails effects.

ESBK-7025 External Switcher Interface Board

This is an expansion board that installs in a slot on the motherboard of the EditStation.
It enables control of DFS-500/500P or DFS-300/300P DME Switcher from the EditStation while playing back VCR tapes for linear editing.

ESBK-7031 QSDI Interface Board

This is an expansion board that installs in a slot on the motherboard of the EditStation. It enables input and output of QSDI (Quarter-inch Serial Digital Interface) video signals and AES/EBU digital audio signals. Install this board when you wish to connect equipment such as a DSR-series VCR, a CD player, or ■ DAT (Digital Audio Tape) recorder and player for input and output of digital audio signals.

ESBK-7032 SDI Interface Board

This is a daughter board that installs on the ESBK-7031 QSDI Interface Board. It provides input and output of digital video signals in the component digital format (D1 format). Install this board when you wish to connect equipment such as a DSR-series digital VCR or a DVW-series digital Betacam VCR. This board is required to perform digital linear editing with the EditStation and a DSR-series VCR.

ESBK-7051 SCSI Option

This is an expansion board that installs in an ISA slot of the EditStation to enable connection of an external MO drive. The MO drive is used to exchange edit data, including index pictures of video clips, with external equipment.

ESBK-7052 Ethernet Option

This is an expansion board that installs in an ISA slot of the EditStation. It enables you to connect the EditStation to an Ethernet[1] network. Install this board when you wish to use a network to exchange graphics or index pictures and other edit data.

Optional Software Products

ESBK-7071 ESDraw™

This is a drawing program for the EditStation, provided on CD-ROM (Compact Disc Read-Only Memory). It is supplied with an adapter board which, when installed in the EditStation, enables you to perform drawing operations and view the results on a video monitor while other processing is performed in the background. An online manual explaining how to use the software is provided together with the software on the CD-ROM disc.

ESBK-7092E Operation Manual

This is a printed manual that provides detailed information about how to use ESDraw.
The contents of this manual are also provided on the ESBK-7071 ESDraw CD-ROM disc.

Related Manuals

The EditStation is supplied with a CD-ROM disc that contains an online manual with detailed operating instructions. The online manual is also available in a printed version as the ESBK-7091E EditStation Operation Manual.
The contents of the EditStation manuals are as follows.

- **Operating Instructions (this manual)**

This manual provides an overview of the system, information about installation and connections, and basic operating instructions. It also explains how to use the online manual and provides information about specifications and other supplementary topics.
After purchasing the unit, read this manual for information about installation, connections, and basic operating procedures.

- **Online Manual (supplied on CD-ROM) and Operation Manual (optional printed manual)**

These manuals provide detailed instructions about how to operate the EditStation. Refer to these manuals for details of operation and installation which are not covered in the Operating Instructions.

1) Ethernet is a registered trademark of FUJI XEROX CO., LTD.

Starting and Shutting Down the System

This chapter explains how to start and shut down the EditStation system, how to use the mouse and keyboard, and how to perform window operations. The operations described here are used by all editing functions.

Starting the System

When you power the system on, a screen appears asking you to enter your user name and password. This is the logon screen, designed to prevent unauthorized use by non-registered users.
In the factory default configuration, you can begin using the EditStation immediately, simply pressing the Enter key without entering a user name and password at the logon screen.
If you wish to limit use of the EditStation to specific users, you can register their user names and passwords.

For details, see "Registering User Names and Passwords" (page 91).

To launch the system software, proceed as follows.

1 Power on the system hardware in the following order.
1) Computer monitor, MO drive, printer and other peripherals, and VCRs, video monitor, audio amplifier or audio monitor system
2) EditStation main unit

After a few moments, the message "Press Ctrl + Alt + Del to log on." appears.

2 Press the Delete key while holding down the Ctrl and Alt keys.

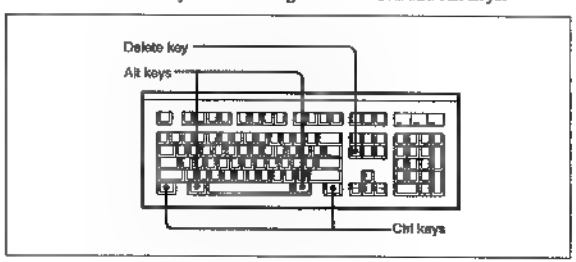

(Continued)

The logon screen appears.
The meanings of the fields in the logon screen are as following.

Username: The name registered when the EditStation is shipped from the factory is "Creator". ■ other user names have been registered, the name of the user who used the system most recently is displayed.

From: The name registered when the unit is shipped from the factory is "ES-7". Normally you will not need to change this name. ■ you wish ■ connect two or more ES-7 units on a network, you will need to assign different names to each unit. For more information about how to change the name, refer to the Operating Instructions of the ESBK-7052 Ethernet Option.

Password: Nothing is registered for this field when the EditStation is shipped from the factory. ■ you have registered a password, enter ■ in this field.

3 Enter your user name.

When you move the pointer to the user name field, its shape changes from an arrow to a vertical line. When its shape changes, click the left mouse button. The cursor in the user name field begins to blink to indicate that you can enter your user name.
You do not need to carry out this step unless you have changed the factory default assignment and wish to use a user name other than the name displayed.

For more information about using the mouse, see page 20.
For more information about using the keyboard, see page 22.

4 Enter your password.

Move the pointer to the password field , click the left mouse button and enter your password. The characters that you type are masked on the screen, appearing as a row of asterisks (*****).
You do not need to carry out this step unless you have registered a password. No password is registered when the EditStation is shipped from the factory.

5 Press the Enter key on the keyboard, or move the pointer to the OK button and click.

The logon procedure is completed, and the Windows NT operating system is launched.
After a few moments, the Program Manager window appears. You will use this window when you start to use the EditStation, and when you turn off the power after use.

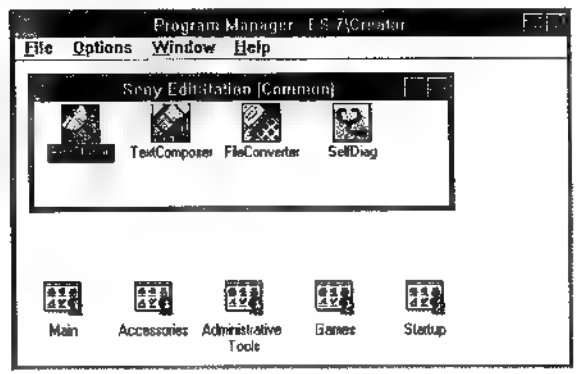

Using the Mouse

Moving the pointer

Learn how to use the mouse pointer by moving the mouse and checking the movement of the pointer on the screen.

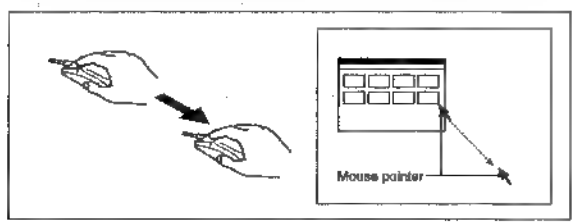

Clicking

Pressing the left button of the mouse and then releasing it immediately is called "clicking". For example, "click the icon" means to move the pointer over an icon, press the left mouse button, and then release it. (Icons are pictures on the screen which represent programs and files.)
Unless an explanation specifically instructs you to "click the right mouse button", clicking is always done with the left mouse button.

Double clicking

Pressing the left button of the mouse and releasing it twice in rapid succession is called "double clicking". Note that if the interval between the two clicks is too long, they are treated as two separate clicks, not as a double click.
You launch the EditStation editing software by double clicking the EditStation icon.

Dragging

Using the mouse to move icons and windows on the screen is called "dragging". To drag an item on the screen, move the pointer over the item, press the left mouse button, and while keeping the mouse button pressed move the pointer to the location where you want to move the item. The movement stops ■ the point where you release the mouse button.
In the EditStation software, you can drag pictures of video clips to arrange them in the desired recording order.

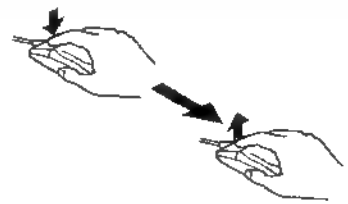

1-9

Entering text and numbers

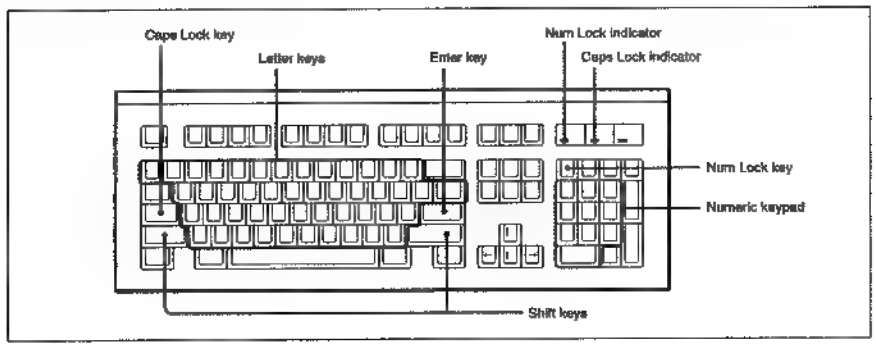

Entering uppercase and lowercase letters

To enter a lowercase letter or number, press the corresponding key. To enter an uppercase letter, press the corresponding key while pressing the Shift key.

Entering all uppercase letters

To enter all uppercase letters, press the Caps Lock key while pressing the Shift key so that the Caps Lock indicator lights. All of the letters that you enter will be uppercase letters.

To cancel entry of all uppercase letters, press the Caps Lock key again while pressing the Shift key so that the Caps Lock indicator goes out.

Entering new lines and confirming input

To enter a new line, press the Enter key. In dialog boxes, press the Enter key after entering a file name or other input text to confirm the input.

Entering a series of numbers

The numeric keypad is convenient for entering a series of numbers. To enter numbers with the numeric keypad, Press the Num Lock key so that the Num Lock indicator lights.

If you press the Num Lock key so that the Num Lock indicator goes out, the keys on the numeric keypad function as cursor keys, page movement keys, delete key and so on.

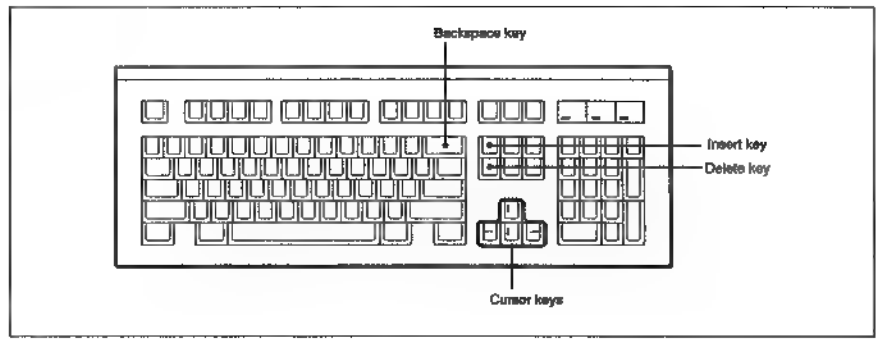

Deleting text

To delete the letter before the cursor, press the Backspace key.

To delete the letter after the cursor, press the Delete key.

Moving the cursor

To move the cursor, press the ←, →, ↑ and ↓ keys.

Switching between insert mode and overwrite mode

To switch between insert mode and overwrite mode, press the Insert key. Each press of the key selects insert mode or overwrite mode.

In insert mode, a letter is inserted at the cursor position when you press a key. The letter that was formerly at the cursor position is shifted to the right.

In overwrite mode, the letter that was formerly at the cursor position is replaced by the new letter when you press a key.

Using Windows

Moving windows

To move a window, move the pointer to the window's title bar and drag it ■ the desired position.

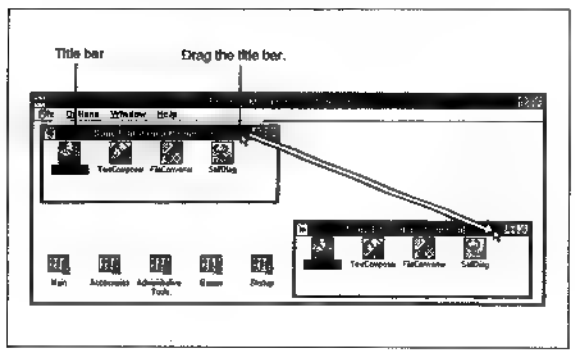

Changing the size of a window

Changing the window size by clicking the window size buttons

You can use the buttons in the upper right corner of a window to change the size of the window.
To maximize the window, press the ■ button.
To restore the window to its original size, press the ▣ button.
To reduce the window to an icon, press the ▽ button. The window returns to its original size when you double click the icon.

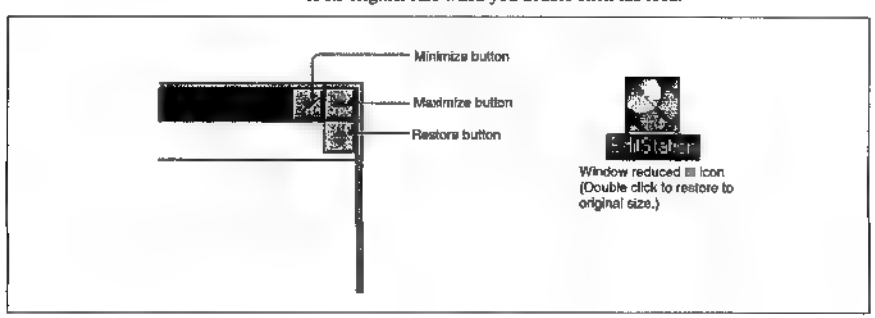

Changing the window size by dragging the borders

Whenever the window is not at maximum size, you can drag any of the four corners of the window to freely adjust its size.
You can also drag the left and right borders to change the window's width or drag the top and bottom borders to change its height.

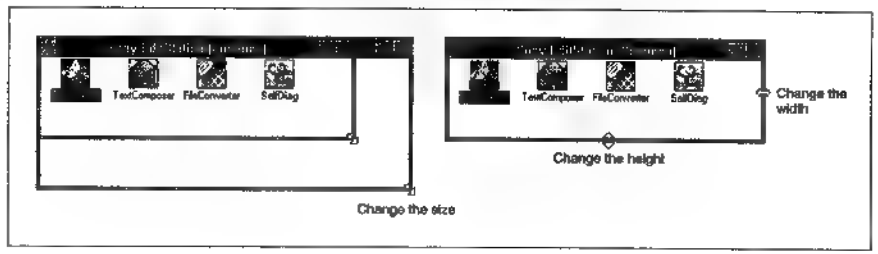

Selecting menu commands

Displaying a menu command list

Directly below the title bar of a window is the menu bar. A list of menu commands appears when you click an item in the menu bar.

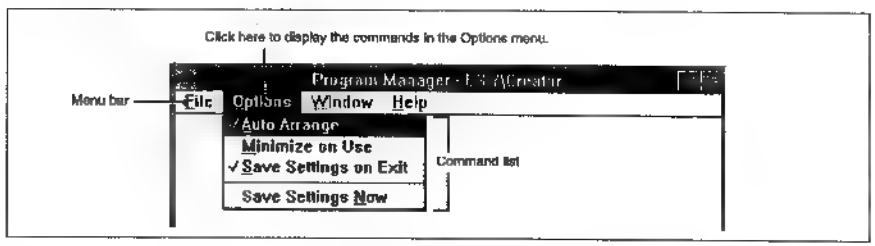

Selecting a menu command

With the command list displayed, keep the left mouse button pressed with the pointer over the command that you want to select. The command is highlighted and executed when you release the mouse button. This operation is called "selecting a menu command".
The following example shows how to select the "How to Use Help" command from the Help menu.

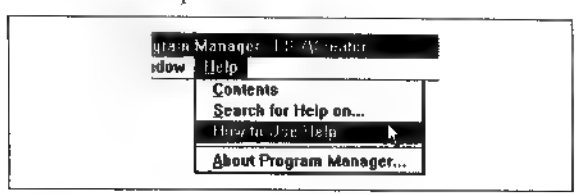

1-11

Scrolling to view more information

If a picture or document is too large to fit on the screen, scroll bars like the ones shown below are displayed. You can use the scroll bars to move the display area up or down, or left and right.

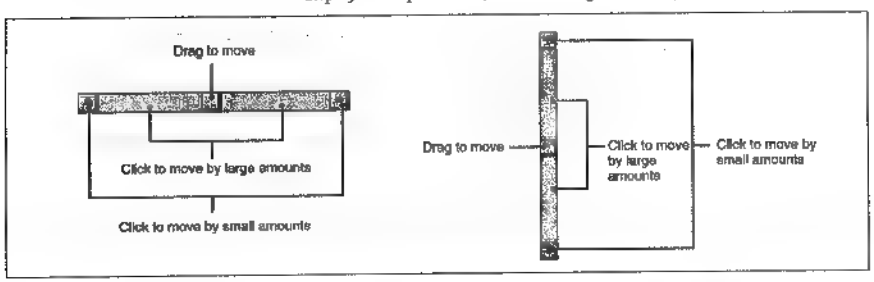

Shutting Down the System

When you have finished using the editing software, use the following procedure to turn off the power. In this manual, turning off the power is referred to as "shutting down" the system.

For more information about using the mouse, see page 20.

1 Move the pointer to the File menu and click the left mouse button.

The commands of the File menu are displayed.

2 Move the pointer to "Shutdown" and click the left mouse button.

After a few moments, the message "It is now safe to turn off your computer." appears.

3 Turn off the power.

Note

This unit is equipped with an internal hard disk for storage of system files and data other than video clips. Do not turn off the power before the message "It's now safe to turn off your computer." appears. Doing so can damage the data on the unit's hard disk. In the worst case, you may not be able to start the system again.

Backing up hard disk data

You should make periodic backup copies of the data on the unit's internal hard disk. Sony cannot be responsible for loss of data or records stored on the hard disk because of hardware failures or any other reason.

The Basics of Editing With EditStation

This section will describe a typical editing session. It will show how to copy materials from tape to the disk recorder, how to specify the recording order, how to apply transitions between video clips, how to insert titles, and other common operations. Read this section as a guide ■ basic editing procedures before using the system for the first time.
This section is intended for readers who have experience in video editing but are not familiar with Windows[1] or readers who are familiar with Windows but have no experience in video editing.
After learning the basic editing procedures, experiment by trying other editing operations while consulting the online manual.

Reference Editing System

The examples in this chapter assume the use of an editing system configured as follows.

- Player 1: PVW-2800/2800P (1)
- Recorder: PVW-2800/2800P (1)
- Disk recorder board: ESBK-7041 (1 set)
- Disk unit: ESBK-7045 (1)
- Preview monitor: PVM-1454Q/2054Q (1)
- DME switcher: ESBK-7021 Basic DME Switcher Board (1 set)
- Audio monitor: Audio amplifier (1) and speakers (2)
- Control panel: ESBK-7011 (1)

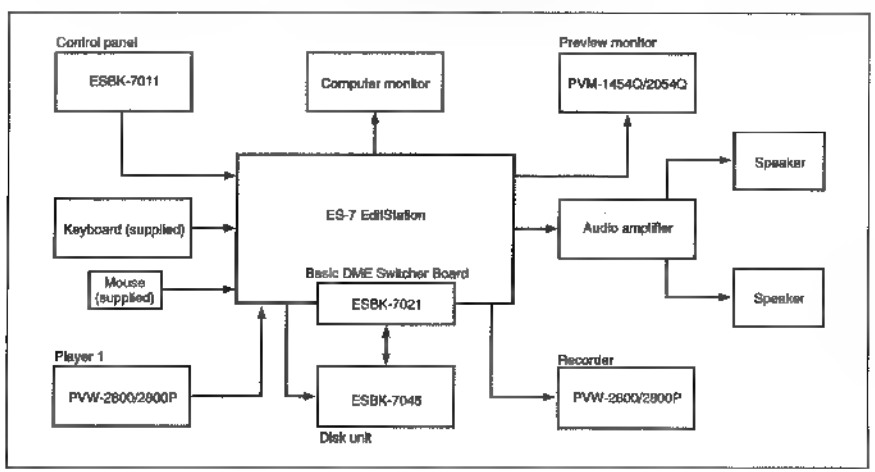

Reference editing system

1) Windows is a trademark of Microsoft Corporation.

The Flow of an Editing Session

The flow of the editing session described in this chapter is as follows.

1. Play back a tape on the player VCR and select video clips.
2. Copy the selected video clips from the tape to the disk recorder.
3. Specify the recording order of the video clips.
4. Apply wipe effects for the transitions between video clips.
5. Apply fade-in and fade-out effects at the start and end of the sequence.
6. Insert titles over the video.
7. Record the editing results on tape.
8. Play back the recorded tape to check the finished edit.

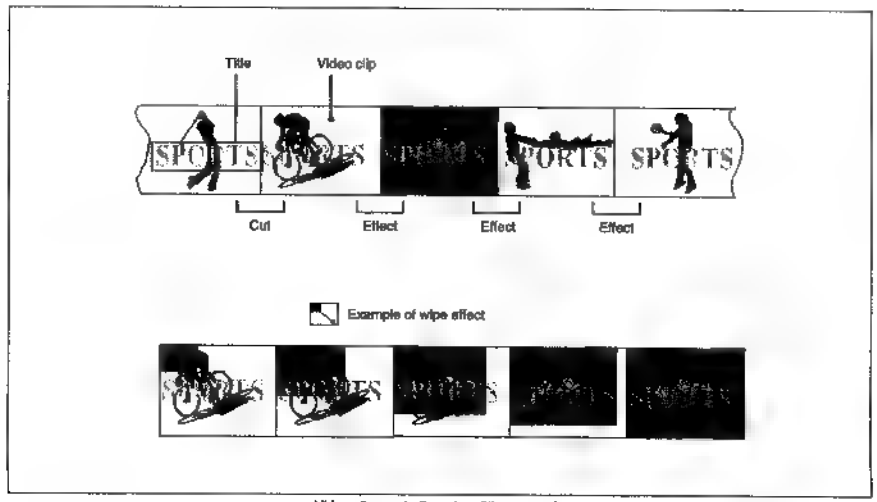

Video clips and effects in editing example

Starting EditStation

Proceed as follows to edit with the EditStation editing software.

1 Start the system.

For more information about starting the system, see page 17.

The following screen appears.

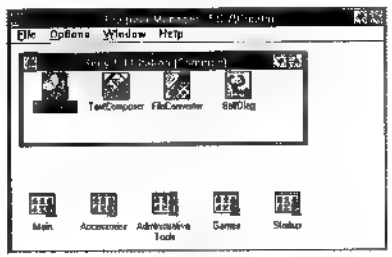

2 Double click the EditStation icon in the Sony EditStation group.

For more information about double clicking, see page 20.

The following screen appears.

This screen is called the EditStation initial screen. Most edit operations are performed here.

To exit EditStation

See "Shutting Down the System" on page 26.

Identifying Parts of the EditStation Initial Screen

The following illustration identifies the parts of the screen that will be used in this chapter.

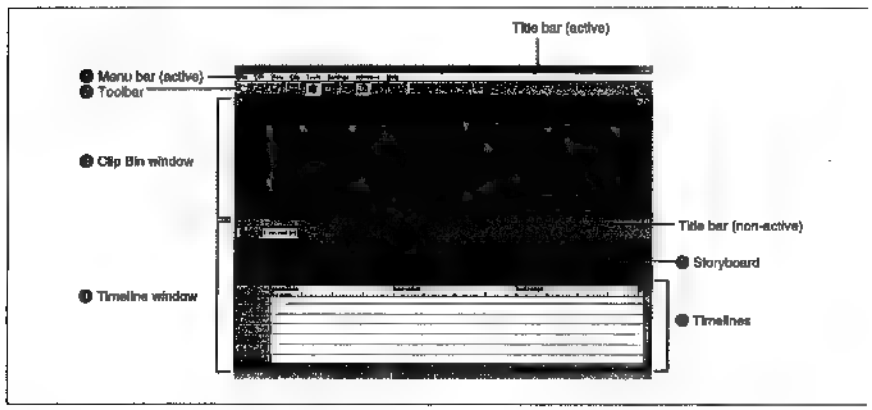

● Menu bar
Displays menu items, which you can click to display lists of menu commands. To close a menu, click somewhere else on the screen.
The items displayed in the menu bar and the commands in menu lists vary depending on whether the Clip Bin window or the Timeline window is the active window. The active window is the window affected by editing operations. Its title bar is highlighted. To make a window the active window, click somewhere in that window.

● Toolbar
The toolbar contains a group of toolbar buttons . Clicking one of the buttons has the same effect as selecting a menu command. The toolbar buttons are very convenient because they allow you to perform common editing operations with a single click of the mouse.

The online manual contains more information about the functions of the toolbar buttons.

● Clip Bin window
The Clip Bin window is a temporary storage area for video clips that you have created. You can assemble a group of clips in the Clip Bin window so that they are readily available when you are choosing clips to record.

● Timeline window
The timeline window is where you perform most editing operations, such as specifying the order of edits (the smallest unit of editing data), setting transitions between scenes, inserting titles, and so on.

● Storyboard
The storyboard is where you arrange edits in the order that you want to record. You can use the storyboard to copy, delete, and rearrange edits.

● Timelines
The timelines display detailed information by track along the temporal axis of the recorder tape. This is where you arrange, modify, and delete edits, set up effects, insert titles, and execute editing operations such as preview and recording. There are separate timelines for the video, audio, effect and other tracks.

Preparing a Master Tape

To edit with the EditStation, you will need to prepare a tape with pre-recorded black burst signals, CTL (control) signals, and timecode. This tape is called the master tape. It is used to record the results of the edit.
If you already have a master tape, you can proceed to "Creating Video Clips" on page 34.
If you do not have a master tape, follow the procedure below to prepare one.

1 Insert a new tape into the recorder VCR.

If the tape has been partially played back, rewind it to the start.

2 In the EditStation initial screen, select Create Master Tape from the Tools menu.

The Create Master Tape dialog box appears.

3 Select RECORDER in the Select VTR field, enter 23:59:30:00 in the Start timecode field, and click the OK button.

Timecode is expressed in units of Hours:Minutes:Seconds:Frames. Black burst signals, CTL signals, and timecode are recorded on the entire tape from the start to the end.

Creating Video Clips

Video clips are the materials that you will use to create your edit. The first step in an edit is to create video clips by using the following procedure.

1 Insert a tape with source materials into the player VCR.

2 In the EditStation initial screen, click the Clip icon.

If the Clip icon is dimmed and cannot be selected, click somewhere in the Clip Bin window to make it the active window.

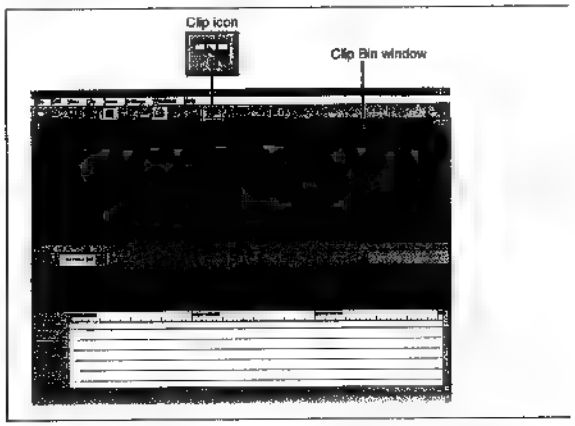

The following window appears. This is the Video Clip Editor dialog box.
P1 (player 1) is selected as the source VCR, and the video of player 1 is displayed in the LIVE window.

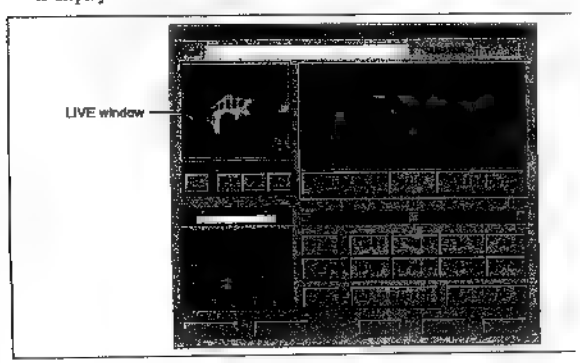

3 Play back the tape in player 1 to find the desired scene.

Use the following buttons.

You can also perform the same operations with the control panel.

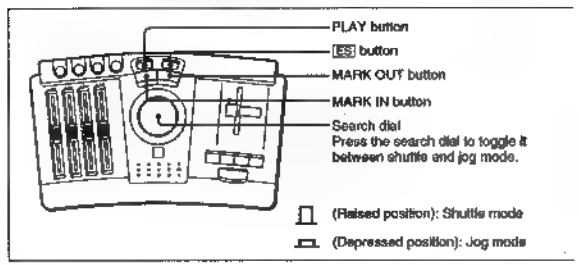

Operation	Video Clip Editor operation	Control panel operation
Normal playback	Click ▶.	Press the PLAY button.
Reverse playback	Click ◀.	In shuttle mode, rotate the search dial slightly in the counterclockwise direction.
High-speed search	Click ◀◀ or ▶▶.	In shuttle mode, rotate the search dial all the way in the clockwise or counterclockwise direction.
Low-speed search	Click ⏮ or ⏭ for frame-by-frame playback.	In jog mode, rotate the search dial slowly.
Still playback	Click the STILL button.	Move the search dial to the center position. If the STILL function has been assigned to the ES button, press the ES button.

4 Specify the start (IN point) of the video clip.

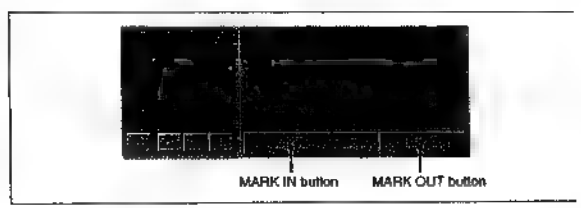

Video Clip Editor: Click the MARK IN button at the desired scene.
Control panel: Press the MARK IN button at the desired scene.

(Continued)

5 Specify the end (OUT point) of the video clip.

Video Clip Editor: Click the MARK OUT button at the desired scene.
Control panel: Press the MARK OUT button at the desired scene.

6 In the Video Clip Editor dialog box, click the Name field and enter the name of the video clip.

The name can be up to 128 characters long.

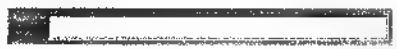

7 Click the Add button in the Video Clip Editor dialog box.

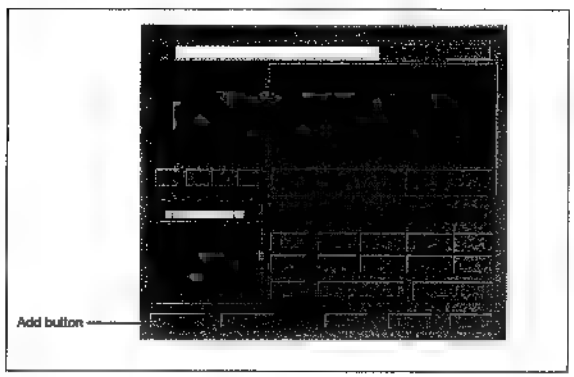

A reel name dialog box like the one shown below appears once when you create the first video clip after inserting a program materials cassette.

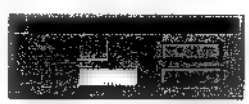

Enter a reel name up to 6 characters in length and click the OK button. An icon appears in the Clip Bin window, showing the video for the IN point of the clip you have created.

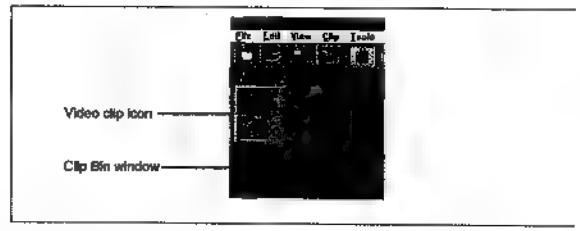

Once you have entered the reel name, you can simply click the Add button to add more clips. However, if you change the playback VCR or insert a new program materials cassette, you will have to enter a reel name again after clicking the Add button.

8 Repeat steps **3** to **7** to create more video clips.

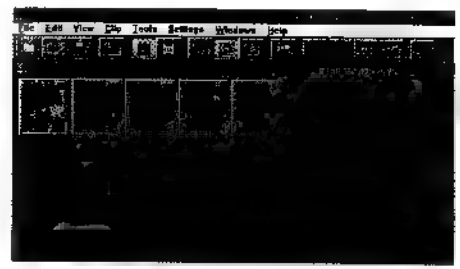

9 Click the Close button in the Video Clip Editor dialog box.

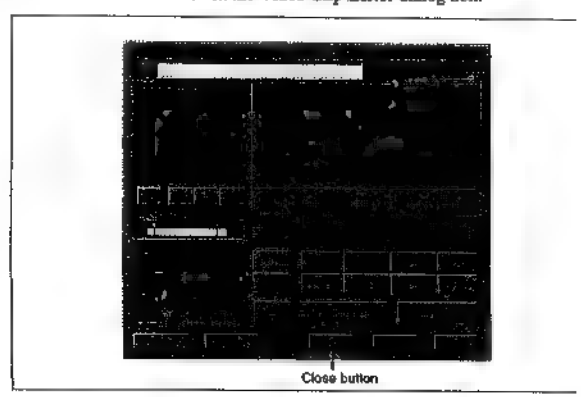

The Video Clip Editor dialog box closes.

The next step is to copy the newly created video clips to the EditStation's disk recorder. Copying the clips to the disk recorder is not mandatory, but clips located on the disk recorder can be cued up instantly, for greater editing efficiency.
Proceed as follows to copy the clips.

1 While holding down the Shift key on the keyboard, click the Clip Bin window icon for the clip that you want to copy.

The frame of the selected clip changes color from black to light blue. If you wish, you can select several clips at once.

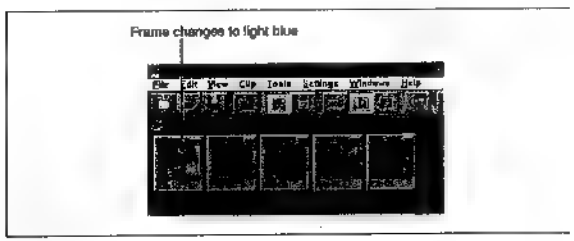

2 Select Upload to Disk Recorder from the Clip menu, and then select Selected.

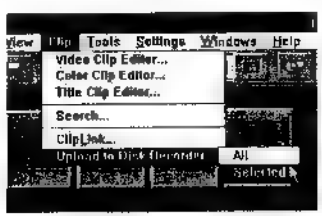

Player 1 begins to play back the tape and the clips selected in step 1 are copied to the disk recorder.
The disk indicators of the clips that have been copied to the disk recorder light in green.

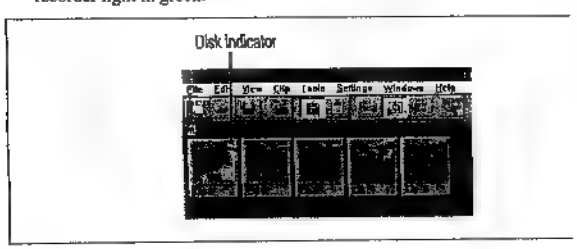

A cut is a transition in which one scene is replaced instantly by another scene. If you have arranged your clips in the storyboard and have not specified otherwise, the transitions between scenes will be cuts.
The following procedure uses cuts to link scenes D, C, and B.

1 Drag video clip D from the Clip Bin window to the storyboard.

See page 21 for more information about dragging.

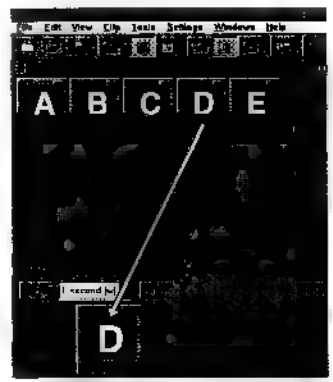

2 Drag video clips C and B in that order from the Clip Bin window to the storyboard.

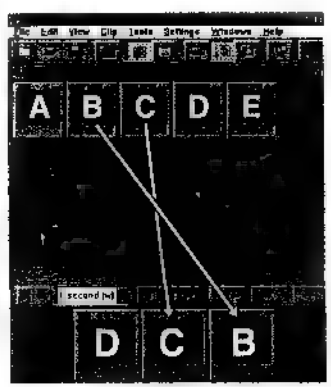

This specifies cut transitions between video clips D and C and video clips C and B.

Previewing the Edit Results

A preview is a rehearsal in which you play back the edited video to check whether you have achieved the results you want. A preview is not recorded by the recorder.
In this section we will conduct a preview to check the results of our cut editing.

To conduct a preview, proceed as follows.

1 Click the timecode ruler at any point above the edit[1] where you want to start the preview.

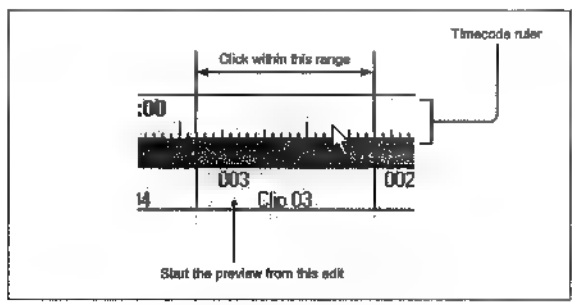

The timeline cursor[2] moves to the clicked position.

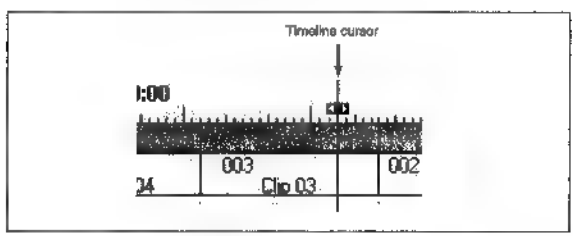

2 Click the Preview button.

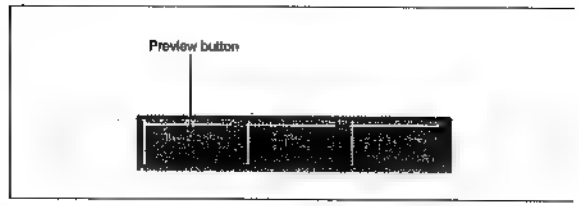

The timeline cursor moves to the start of the edit and the preview begins from that point. The preview video is displayed on the video monitor.

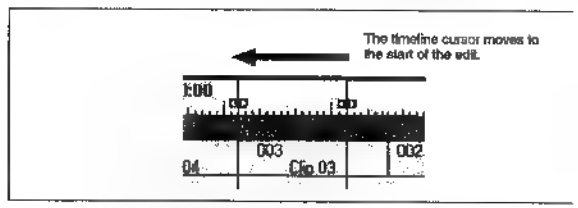

In the example on page 39, when a preview is executed from the first edit, D, C, and B are played back in order with a cut transition between each scene.

After conducting a preview, make any adjustments that may be necessary and proceed to the next stage in the editing.

Stopping a preview before it finishes

Click the ALL STOP button on the screen, or press the ALL STOP button on the control panel.

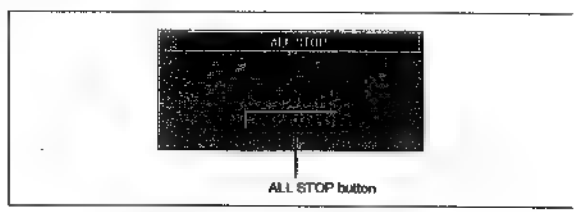

1) An edit is the smallest unit of editing data. Edits are shown on the timeline as rectangular frames. Each edit corresponds to a specific video clip in the Clip Bin window.

2) The timeline cursor is the cursor that shows the current position on the timeline. Video under the timeline cursor is displayed on the video monitor.

Adjusting Edit Points

If a preview shows that you need to adjust the duration of a clip, adjust the clip's IN point or OUT point.

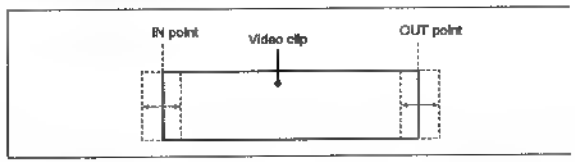

You can use the same methods to adjust the duration of clips in the Clip Bin window and clips on the storyboard. If you adjust the duration of a clip in one window, the duration of the clip in the other window changes automatically.

Proceed as follows to adjust the duration of a clip.

1 Double click the icon of the video clip you want to adjust.

The Video Clip Editor dialog box opens.

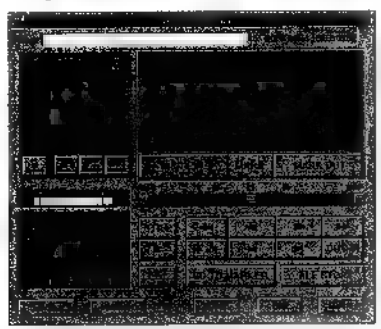

2 Click the |◀ IN button or the OUT ▶| button.

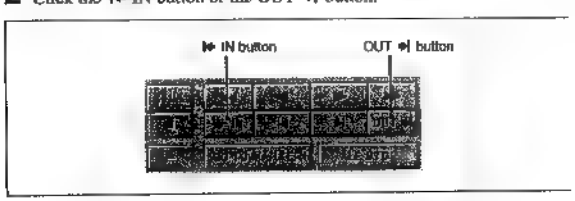

The playback position changes to the position of the IN point or OUT point, and the video for that position appears in the LIVE window.

3 Click the |◀ button or the ▶| button to adjust the IN point or OUT point, then click the MARK IN or MARK OUT button to set the new IN or OUT point.

Each time you click the button, the playback position moves one frame forward or back.
You can also put the search dial on the control panel into jog mode and rotate it slowly to make fine adjustments of the playback position.

4 Click the Replace button.

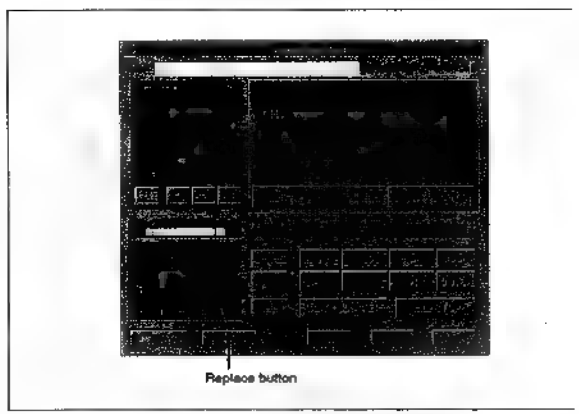

The Video Clip Editor dialog box closes and the IN or OUT timecode value of the video clip in the Clip Bin window and storyboard changes to reflect the adjusted IN or OUT point.

Points to note when increasing the duration of a video clip

In the factory default configuration, video from two seconds before the IN point to two seconds after the OUT point is copied to the disk recorder when you copy video clips from tape to the disk recorder. Therefore, you cannot add more than two seconds at the start and end of a clip when working with clips stored on the disk recorder.
If you wish, you can increase the length of video recorded at the start and end of a clip to more than two seconds. Make the Clip Bin window the active window, select Options from the Settings menu, and set the desired length.

As shown in the figure below, you can begin by copying a video clip with more than enough duration to the disk recorder and then create shorter clips from the longer clip. In this case there is no limitation on the adjustment of edit points, even when you are working with clips stored on the disk recorder.

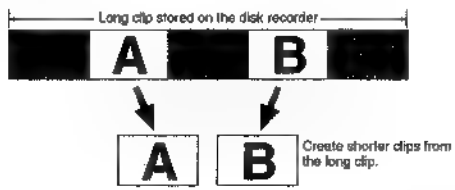

If you know in advance that you may want to change the edit points of a video clip, you should normally start by uploading a longer clip to the disk recorder, or use the Settings menu to change the factory default length.

Tesla 2 Wipe

A wipe is a transition effect in which one scene gradually expands to replace another scene. This section will explain an example that adds two types of wipe transition, and then uses a cut as the third transition. When you preview after adding the wipes, the scenes change as shown below.

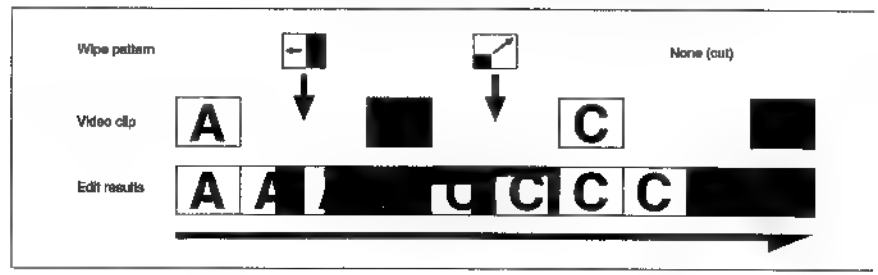

Proceed as follows.

1 Click the effect button at the top of the Timeline window.

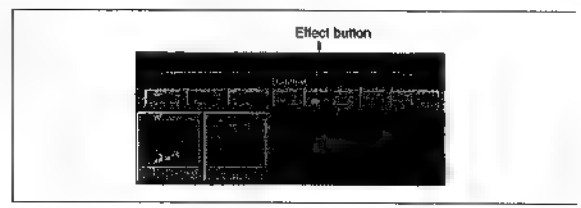

The Effect dialog box opens.

2 Click the Wipe tab in the Effect dialog box.

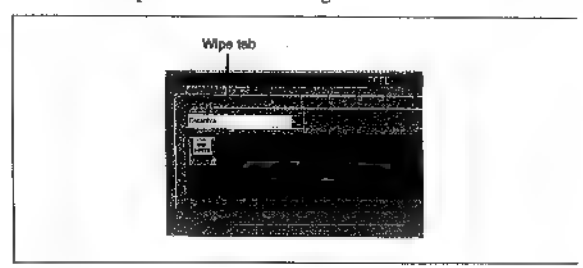

This shows wipe patterns.

(Continued)

3 On video track V1 or V2, click the edit that you want to remain as the scene after the wipe transition.

The frame of the clicked edit becomes thicker to show that the edit is selected.

4 Drag a wipe pattern to the position where you want to insert it on the Effect track.

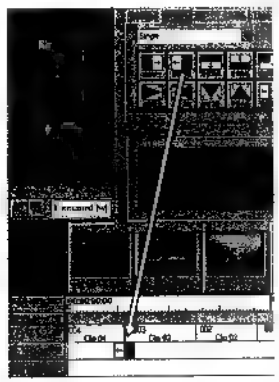

The wipe pattern is displayed on the Effect track. The edit that will be visible when the wipe finishes moves automatically to the V2 track. There is an overlap between the edits visible before and after the wipe. The length of the overlap is equivalent to the duration of the wipe.

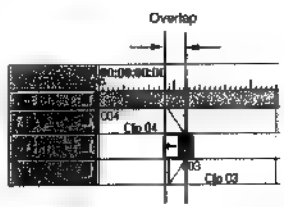

5 Repeat steps **3** and **4** to set a second wipe pattern.

The timelines now appear as shown below.

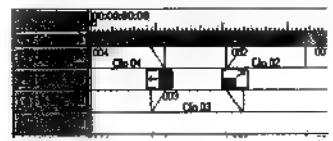

6 Click the Close button in the Effect dialog box.

The Effect dialog box closes.

About edit blocks

When you add an effect, such as wipe, that involves a transition between scenes, neighboring blocks on the timeline are joined into a single block. This kind of block on the Edit track is called an edit block.

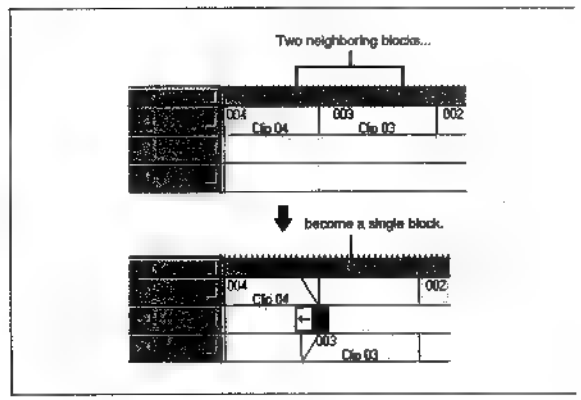

Previews are conducted in units of edit blocks. For example, if you click the Preview button when the timeline cursor is located in the position shown below, the timeline cursor will move to the start of Clip 004 (not to the start of Clip 002), and the preview will start from the start of Clip 004.

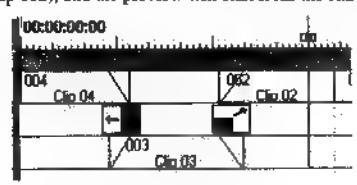

Fade in and fade out are effects in which the video appears or disappears gradually.
This section will explain an example that uses a black clip background to fade in from black and to fade out to black. The procedure uses the Dissolve tab of the Effect dialog box. Dissolve is another effect in which video appears or disappears gradually.

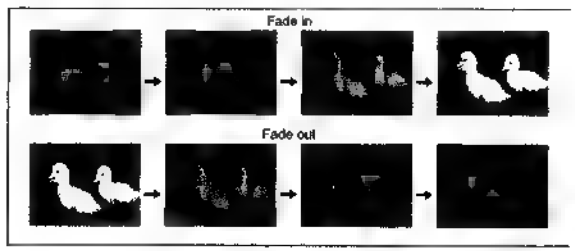

Proceed as follows.

1 Make the Clip Bin window the active window and select Color Clip Editor from the Clip menu.

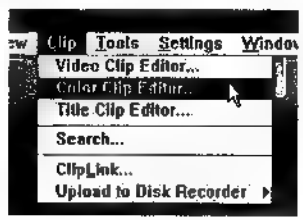

The Color Clip Editor dialog box appears.

2 Clip the Black tab and enter 00:00:02:00 in the Duration field.

The duration is expressed in units of Hours:Minutes:Seconds:Frames. This example creates a clip that displays a black picture for two seconds.

3 Click the Add button and then the Close button.

A black clip icon appears in the Clip Bin window and the Color Clip Editor dialog box closes.

4 Drag the black clip icon from the Clip Bin window to the beginning and end of the edits on the storyboard.

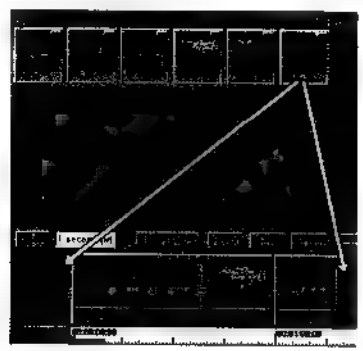

(Continued)

5 Click the effect button in the Timeline window.

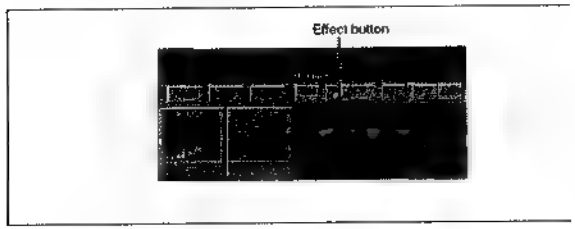

The Effect dialog box appears.

6 Click the Dissolve tab in the Effect dialog box.

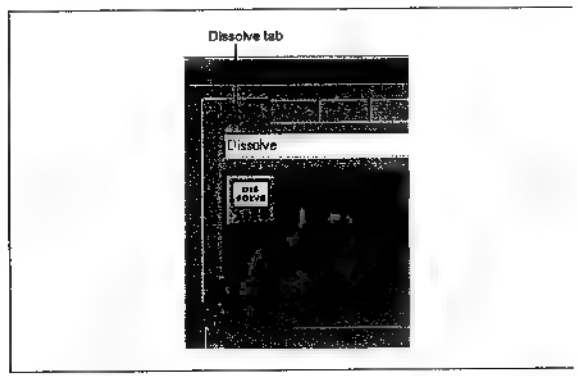

7 On the V1 track, click the edit for the scene that will remain after the fade-in (the second edit from the start).

The frame of the clicked edit becomes thicker to show that the edit is selected.

8 Drag the dissolve icon to the first transition on the Effect track.

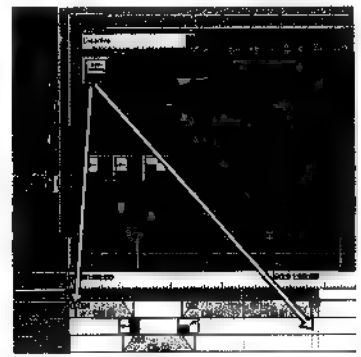

9 Click the final edit on the V1 track.

The frame of the clicked edit becomes thicker to show that the edit is selected.

10 Drag the dissolve icon to the final transition on the Effect track.

As shown below, a dissolve effect if set for the first and final edits.

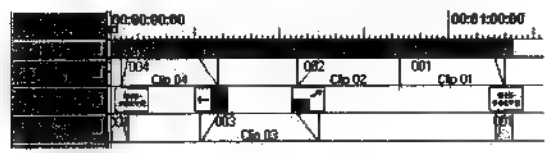

11 Click the Close button of the Effect dialog box.

The Effect dialog box closes.

Inserting a Title

The flow of operations for inserting a title into video is as follows. To prepare the title text, use the Text Composer software that comes pre-installed on the system. You can call Text Composer from within EditStation.

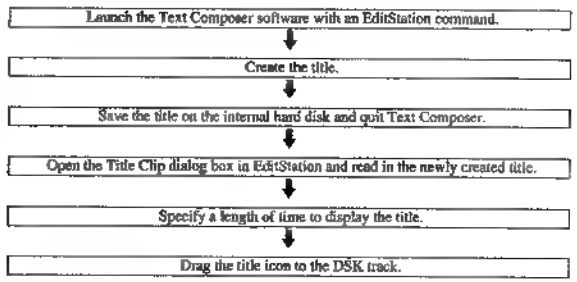

Creating a title

Proceed as follows ■ create a title.

1 Select Text Composer from the Tools menu.

Text Composer is launched, and the following screen appears on the video monitor. This is the Text Composer main screen.

2 Click the create text button on the main menu, use the mouse to move the text cursor (the vertical line) to the position on the screen where you want to insert the title, and click the position.

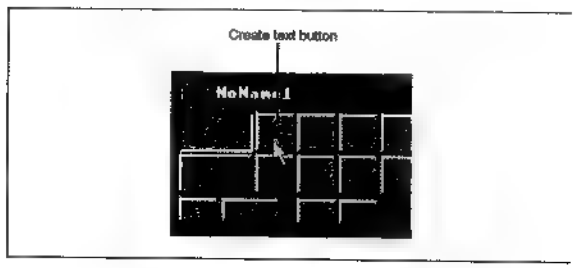

3 Enter the title from the keyboard and click somewhere on the screen away from the title text to confirm the input.

The title that you entered is displayed on the video monitor with edge and shadow effects.

For details about changing the size and color of the title and adding or removing edge and shadow effects, refer to the online manual.

4 Click the File button on the main menu.

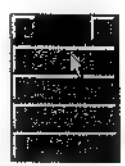

The File menu appears.

(Continued)

5 Click the Save button on the File menu.

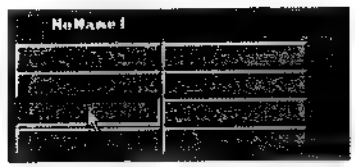

The Save dialog box appears.

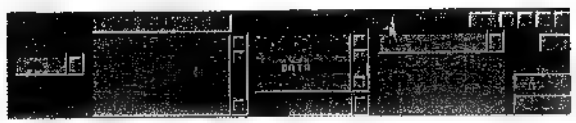

6 Click the With Image check box to make a check mark appear in the box, enter a file name for the title file in the name field, and click the OK button.

File names can be up to 256 characters in length, and can contain spaces. Uppercase letters are distinguished from lowercase letters. For this example, enter the file name "Title 1" and click the OK button.

When you click the OK button, the screen returns to the main menu.

7 Click the File button on the main menu and click the Quit button on the File menu.

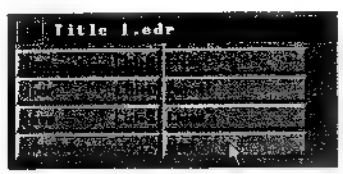

The Text Composer screen closes.

Inserting a title into the video

Proceed as follow to insert a title into the video.

1 Make the Clip Bin window the active window and select Title Clip Editor from the Clip menu.

The Title Clip Editor dialog appears.

2 Click the Still tab, and then click the Browse button.

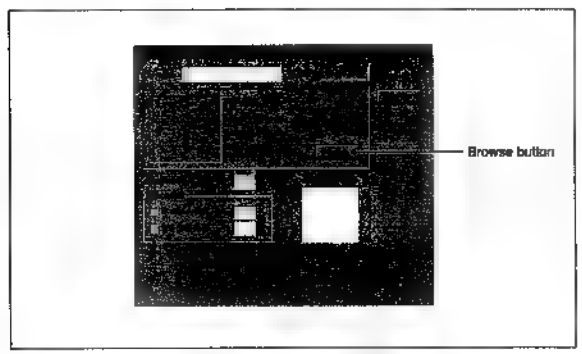

A dialog box appears so that you can browse the hard disk for the title file created earlier.

(Continued)

3 Select the directory "C:\ES-7\DATA".

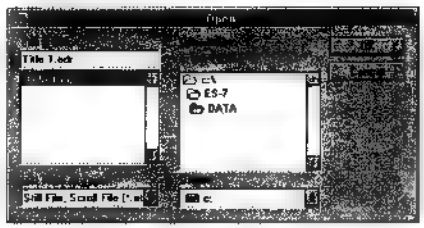

Double click the directory "C:\" at the top of the directory list to show the directories located below that directory. Find the directory "ES-7" and double click it. Then find the directory "DATA" below the "ES-7" directory and double click it. The directory changes to "C:\ES-7\DATA".

4 Select "Title 1.edr" from the file list by clicking it, and then click the OK button.

The title that you created earlier is read in.

5 Enter 300 in the Pause Time box.

The pause time unit is frames. The title will be displayed for the length of time specified in this field. In this example, the title will be displayed for 300 frames (about 10 seconds).

6 Click the Add button, and then the Close button.

A title clip icon appears in the Clip Bin window and the Title Clip Editor dialog box closes.

7 Drag the title clip icon from the Clip Bin window to the DSK track.

To adjust the position of the title clip on the DSK track, click the title clip icon, click the magnifying glass button in the Timeline window, and press the → and ← keys on the keyboard.
In the position shown below, the title will be superimposed over the video of clip 004 for about 10 seconds after completion of the fade in.

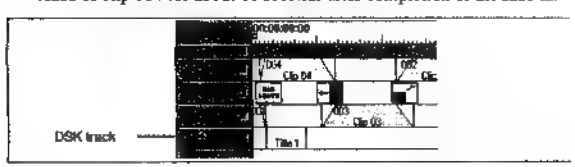

Previewing the edit results

The steps above complete the operations required for this example.

Before recording, it is a good idea to conduct a preview to check the overall contents and make sure that you achieved the results you wanted. If necessary, you can then go back and make any required adjustments.

To conduct a complete preview, proceed as follows.

1 Make the Timeline window the active window and select Set Timeline Cursor from the Execute menu.

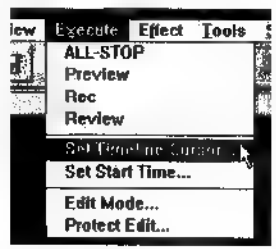

A timecode input dialog box appears.

2 Enter 00:00:00:00 in the text box and click the OK button.

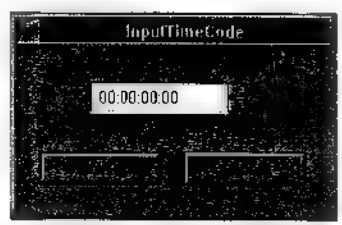

The timeline cursor moves to the left edge of the timeline.

You can click the left edge of the timeline ruler to move the timeline cursor all the way to the left.

3 Click the Preview button.

The preview starts from the first edit on the timeline.

Recording the Edit Results

If the preview revealed no problems, you are ready to record the edit results on tape.
To record, make the Timeline window active and select Download to VTR from the Tools menu.

The recorder tape begins to run and the edit results are recorded. The recorder tape stops automatically when recording finishes.

Checking the recording

To check what you have recorded, proceed as follows.

1 Click the clip icon in the Clip Bin window.

The Video Clip Editor dialog box opens.

2 Click the R button under the LIVE window.

The recorder VCR becomes the source VCR.

3 Use the tape transport control buttons in the Video Clip Editor dialog box to rewind the tape to the beginning and play it back.

The video recorded on the tape appears on the video monitor.

Saving the Edit File

After finishing the edit, you will want to save the edit file. The file saved at this point contains the video clips, effects, titles, and other data that were used in the editing. Saving the data in a file allows you to recreate the edit results. For example, you can work up to the preview stage, save the data in a file, and come back the next day to record the edit results. Or you can finish part of the project and come back to it later to add new material.

Proceed as follows to save the edit data in a file.

1 Select Save As from the EditStation File menu.

The Save As dialog box appears.

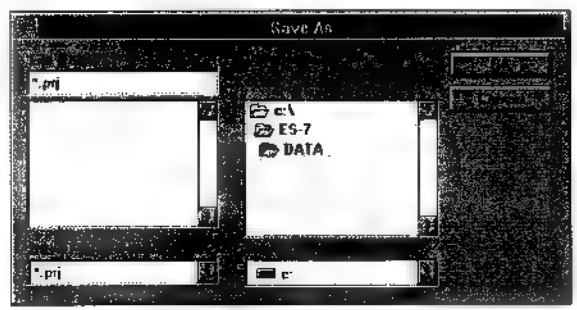

2 Enter the file name and click the OK button.

The file name can be up to 256 characters long. Specify ".prj" as the extension at the end of the file name.
The current state of every EditStation window is saved in the file, enabling you to come back and pick up where you left off.
To open the edit file, select Open from the EditStation File menu and enter the file name.

Using the Online Manual

In real-life editing situations, the basic operations described in this chapter will not be enough. You will need more detailed information about advanced operations and settings. The online manual is a detailed guide with information about every aspect of the EditStation.
To use the online manual, proceed as follows.

1 Insert the supplied CD-ROM disc.

For more information about inserting CD-ROM discs, see "Inserting and removing CD-ROM discs" (page 68).

2 Select Contents from the EditStation Help menu.

The Contents tab of the Help Topics window appears.

The book icons represent topics organized by category. To view the topics in a category, click the book icon and then click the Open button. The book opens and the topics appear. To close a book and remove the topics from the screen, click the book and then click the Close button.

The [?] icons represent the help topics in a category.

3 To view the contents of a topic, click the [?] icon and then click the Display button.

The contents of the topic are displayed.

To return from a help topic to the Contents

Click the Contents button.

Using jumps and glossary definitions to find information

Most help topics contain jumps and glossary definitions: words that are underlined and displayed in green indicate that they lead to further information.

Jumps

Jumps are displayed in green with a solid underline. You can click a jump to go to another topic with related information. To return from a jump, click the Back button at the top of the Help window.

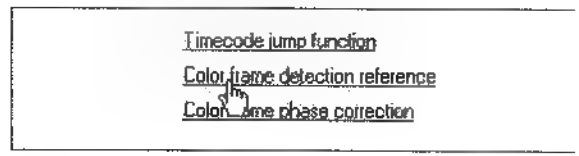

Glossary definitions

Glossary terms are displayed in green with a dotted underline. When you click a glossary term, a pop-up window appears with a definition of the term. To remove the definition from your screen, click anywhere on your screen, or press the ESC key.

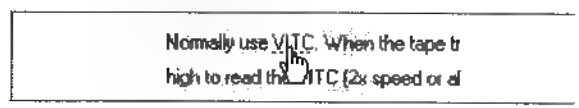

1-29

Using index to find information

When you want to find information about a certain word, you can use the Index tab to display all topics associated with that word.
To search for information using Index, proceed as follows.

1 Click the Index button of the Help Topics window.

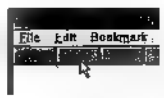

2 Type a word, or select one from the list of matching words. Then click Display.

A list of topics associated with that word is displayed.

3 Select the topic that you want to view, then click Display.

The Help topic that you selected is displayed.

To close the online manual

Select Exit from the File menu of the Help Topics window.

Exiting EditStation

This completes the introduction to EditStation.
To exit EditStation, proceed as follows.

From the File menu, select Exit.

If you have made any editing changes and not yet saved them in a file, a dialog box appears asking whether you want to save them. Save the changes if necessary.
If there are no unsaved changes, the EditStation window closes immediately.

Arranging System Components

To increase editing efficiency, take the following points into consideration when installing the EditStation.

- Place the video monitor on the left side of the operator and the computer monitor[1] on the right side.
- Operate the control panel with the left hand and the mouse or tablet with the right hand.
- Place the ES-7 main unit[2] and VCRs where they will be easily accessible, according to the space available in your work environment.

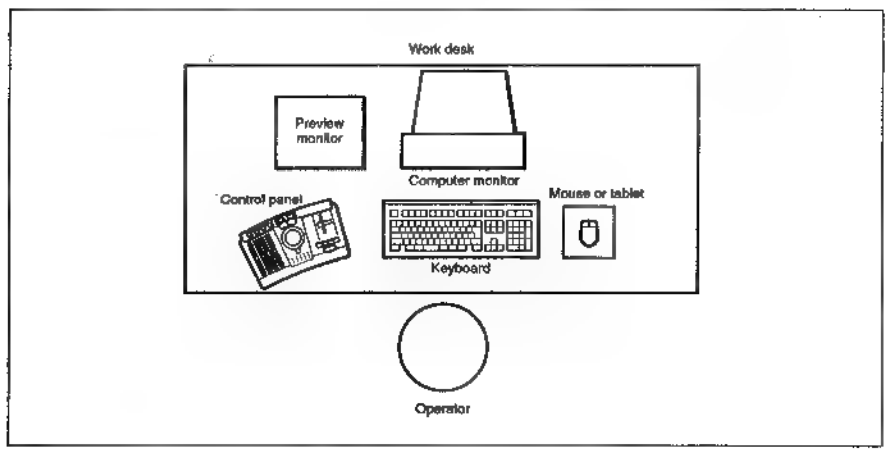

Arrangement of system components

1) If you wish to install the ES-7 main unit at a distance from the computer monitor, use a multi-cable with a D-sub 15-pin connector on one end and 5 BNC cables on the other end. Use 5 BNC extension cables, connected to the BNC connectors of the multi-cable. Always use BNC extension cables of the same length and characteristics. If the cables are of different lengths, the phase of the output signals from the BNC connectors will not be the same. Use of a multi-cable extension cable is recommended. However, note that picture quality may decline if the extension cable is too long.

2) To allow the ES-7 main unit to be installed at a distance from the mouse and keyboard, connect the supplied 4-meter keyboard and mouse extension cables to the regular keyboard and mouse cables. A 5-meter connection cable is supplied for the control panel.

Using Floppy Disks

The EditStation uses floppy disks to share EDL data with other editing units. Software upgrades may also be provided on floppy disks. This section will explain the basics of handling floppy disks.

Types of floppy disks

You can use 2DD and 2HD floppy disks with this unit. The differences between 2DD and 2HD floppy disks are as shown below.

Type	Recording capacity for formatting
2DD	720 KB
2HD	1.44 MB

Some editing units can read only 2DD floppy disks. To exchange editing data with these units, you will need to use 2DD floppy disks.

Inserting and removing floppy disks

Insert floppy disks with the label side up. Push the disk into the disk drive until you hear a click. To remove a floppy disk, wait until the access indicator goes out and then press the disk drive eject button.

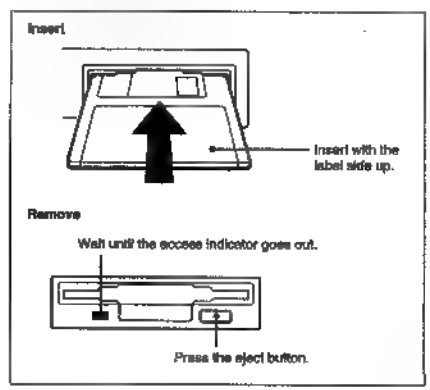

Floppy disk drive names

To read the data from a floppy disk, you must specify the drive name of the floppy disk drive. The floppy disk drive of this unit has the drive name "A:".

Formatting floppy disks

Before using a floppy disk, you will need to initialize it by formatting it.
Proceed as follows to format a floppy disk.

1 Log on using the procedure explained in "Starting the System" (page 17).

The Program Manager window appears.

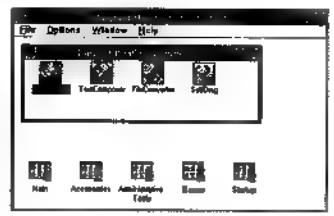

2 Insert a floppy disk into the disk drive slot.

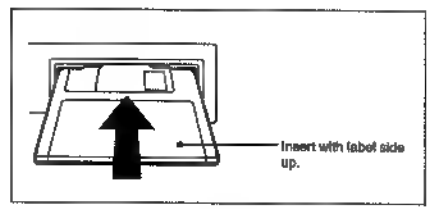

Note

When you format a floppy disk, any data that may have been stored on the disk is erased. Before formatting a floppy disk, check to be sure that it does not contain any valuable information.

3 Double click the File Manager icon in the Main group.

The File Manger window opens.

4 Select Format Disk from the Disk menu.

The following dialog box appears.

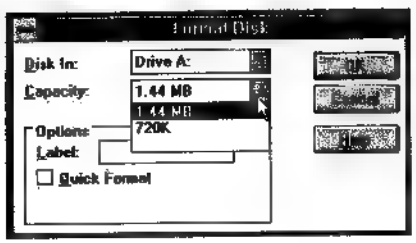

5 Select 1.44 MB (2HD) or 720K (2DD) from the Capacity list and click the OK button.

Formatting begins when you click the Yes button in the Confirm Format Disk dialog box.
When formatting is finished, a message appears asking if you want to format another floppy disk. Click the Yes or No button as required.

6 When finished, select Exit from the File Manager File menu.

The File Manager window closes.

Using CD-ROM Discs

The software and online manual for this unit are supplied on a CD-ROM disc. Software upgrades may also be provided on CD-ROM discs.
This section will explain the basics of handling floppy disks.

Inserting and removing CD-ROM discs

Inserting CD-ROM discs

Proceed as follows to insert a CD-ROM disc.

1 Press the EJECT button to bring the tray out.

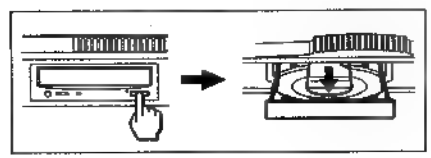

2 Place the CD-ROM disc on the tray with the label side up.

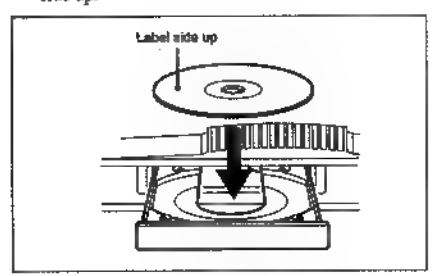

Be careful to place the disc so that it is level on the tray.

3 Press the EJECT button to close the tray.

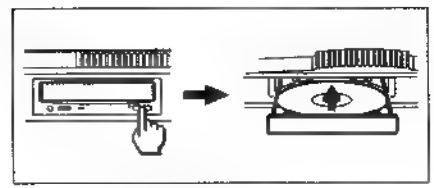

Removing CD-ROM discs

To remove a CD-ROM disc, press the EJECT button to bring the tray out, lift the disc from the tray, and press the EJECT button again to close the tray.

If the tray does not come out when you press the eject button

First shut down the system using the procedure explained in "Shutting Down the System" (page 26). Then open the tray as follows.

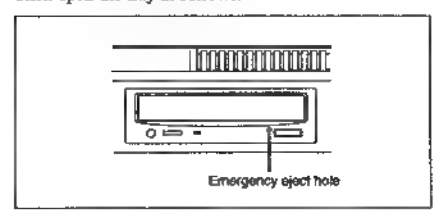

Insert a tool with a long metal tip into the emergency eject hole, and push in until the tray cover opens slightly. When the tray cover opens, grasp it and pull the tray the rest of the way out.

CD-ROM drive names

To read the data from a CD-ROM disc, you must specify the drive name of the CD-ROM disc drive. The CD-ROM disc drive of this unit has the drive name "D:".

Connecting System Components

This section provides examples that show how to connect the components in your editing system.

The VCR connection examples in this section assume that an ESBK-7045 Disk Unit has been connected to the EditStation.

For more information about connecting a disk unit, see page 72.

Connecting analog VCRs

You can do the following with a system configured as shown below.

- Do linear editing using materials stored on tape and VCR playback.
- Copy clips from tape to the disk recorder.
- Do non-linear editing using materials stored on the disk recorder.
- Record the results of the edit on tape as analog component video signals.

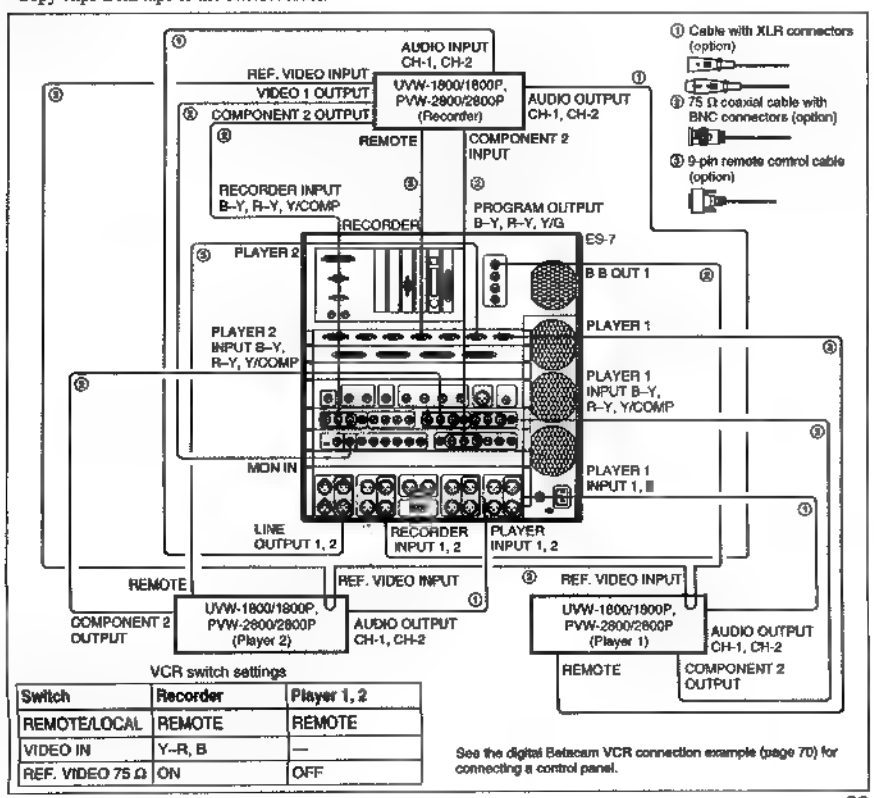

VCR switch settings

Switch	Recorder	Player 1, 2
REMOTE/LOCAL	REMOTE	REMOTE
VIDEO IN	Y–R, B	—
REF. VIDEO 75 Ω	ON	OFF

See the digital Betacam VCR connection example (page 70) for connecting a control panel.

Connecting digital Betacam VCRs

You can do the following with a system configured as shown below.

- Do linear editing using materials stored on tape and VCR playback.
- Copy clips from tape to the disk recorder.
- Do non-linear editing using materials stored on the disk recorder.
- Record the results of the edit on tape as digital Betacam video signals.

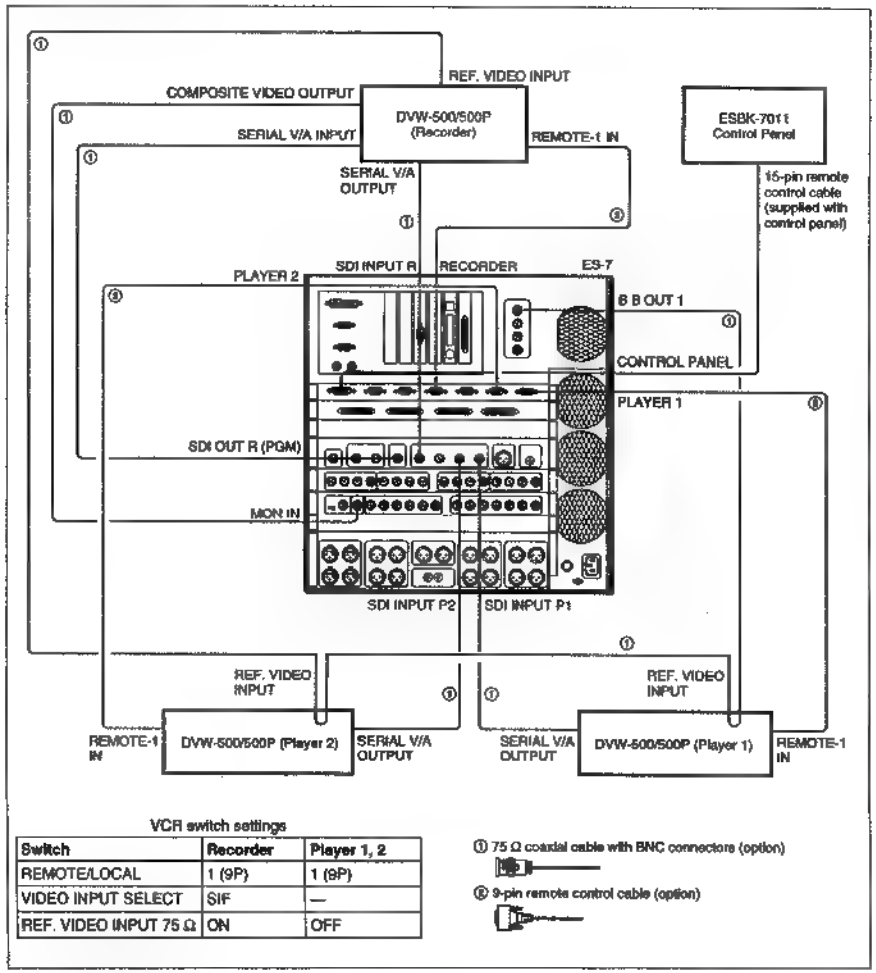

VCR switch settings

Switch	Recorder	Player 1, 2
REMOTE/LOCAL	1 (9P)	1 (9P)
VIDEO INPUT SELECT	SIF	—
REF. VIDEO INPUT 75 Ω	ON	OFF

① 75 Ω coaxial cable with BNC connectors (option)

② 9-pin remote control cable (option)

Connecting DSR-series digital VCRs

You can do the following with a system configured as shown below.

- Do linear editing using VCR playback of materials stored on tape.
- Copy clips from tape to the disk recorder at 4 times normal speed.
- Do non-linear editing using materials stored on the disk recorder.
- Record the results of the edit on tape as serial digital video signals at 4 times normal speed.

In this example, both SDI and QSDI signals are connected. The roles of the signals are as follows.

SDI signals: Used in linear editing and hybrid editing.

QSDI signals: Used in non-linear editing and for uploads and downloads at 4 times normal speed.

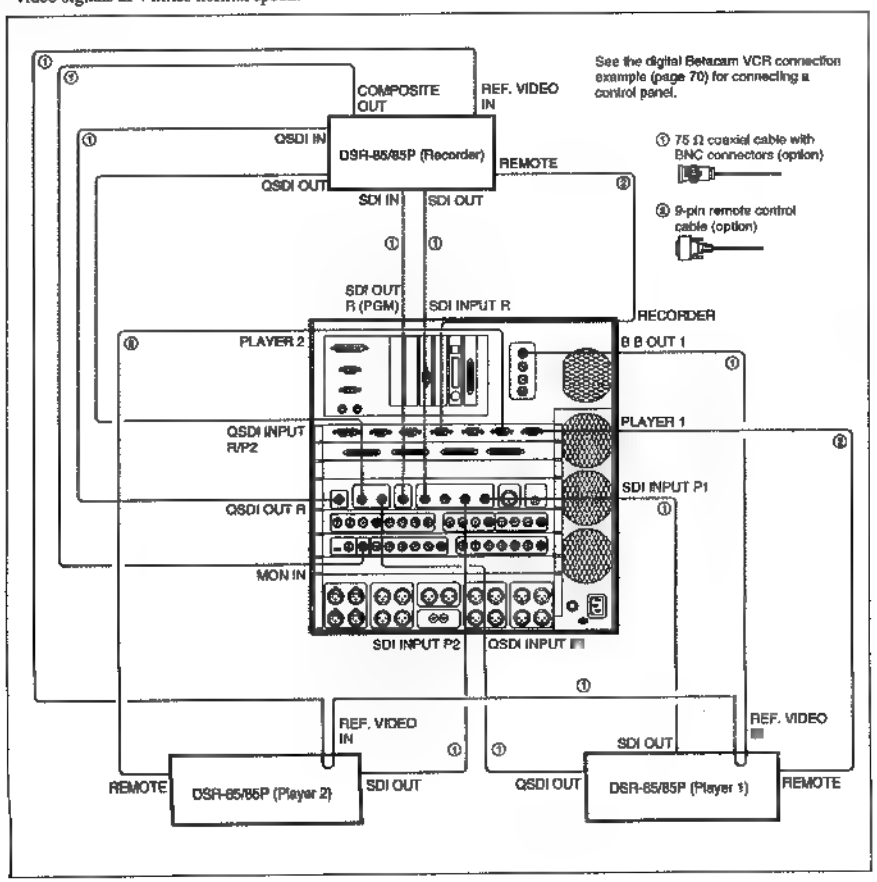

You can do the following with a system configured as shown below.

- Do non-linear editing using materials stored on the disk recorder.
- Record up to 4 hours of video on the disk recorder in high-quality mode.

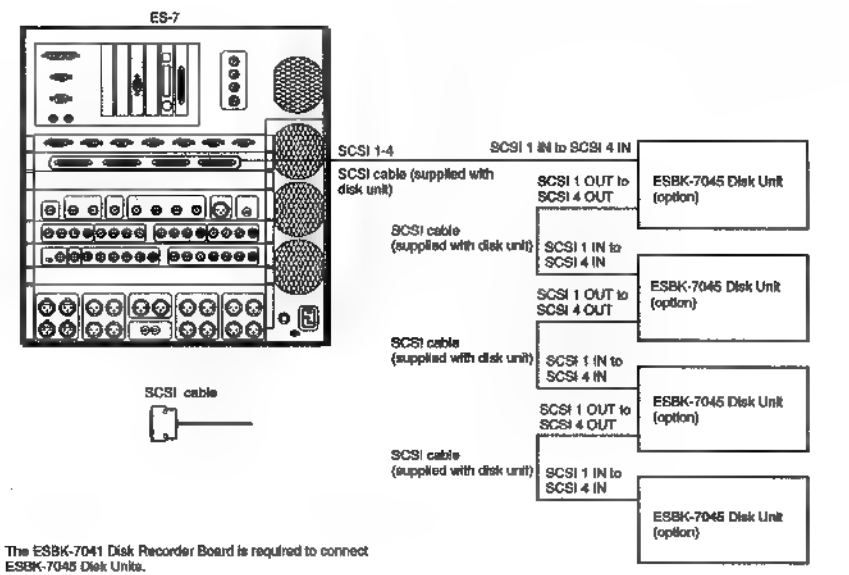

Connecting a Computer Peripheral

You can do the following with a system configured as shown below.

- Use a tablet to create graphics.
- Send and receive video and editing data over a network.
- Store editing data on MO disks.
- Print editing data.

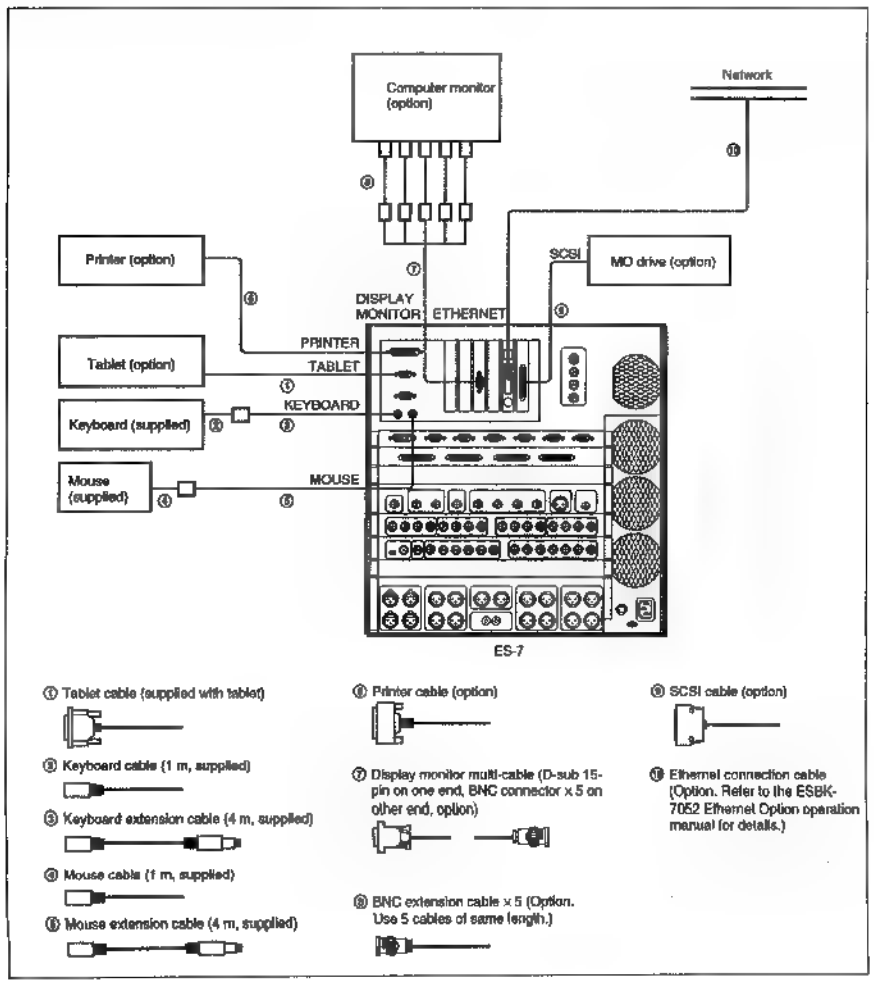

Connecting Audio Equipment

You can do the following with a system configured as shown below.

- Record digital audio signals from CDs or DATs to videotape.
- Monitor audio signals.
- Monitor video signals before recording.
- Monitor signals input to the recorder.

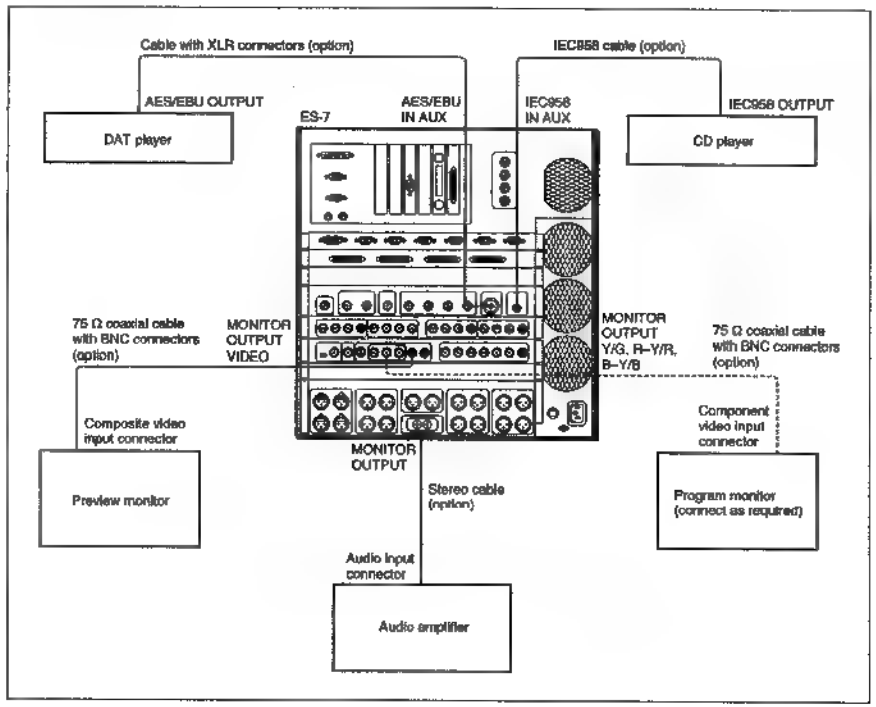

Connecting an External DME Switcher

You can do the following with a system configured as shown below.

- Do linear editing using materials stored on tape and VCR playback.
- Use the DFS-300/300P/500/500P to apply effects and switch between scenes.
- Record the edit results as analog component video signals.

Setting the editor selection switch on the DME switcher

When connecting a DFS-300/300P/500/500P DME switcher, set the editor selection switch on the DME switcher as follows.

DFS-300/300P: PVE-500
DFS-500/500P: BVE-900

Types of editing that can be done

The only kind of editing that can be done with a system configured as shown below is linear editing of analog video signals. Non-linear editing and editing of digital signals are not possible.

Signal connections, settings, and limitations

- When you connect an external DME switcher, the outputs of the MONITOR OUTPUT and PROGRAM OUTPUT connectors of the ES-7 are as follows.
  MONITOR OUTPUT connector: The output is always the component key fill signal of the internal titler of the ES-7. Connect to the DSK VIDEO IN connector or the INPUT-4 connector of the DFS-300/300P/500/500P.
  PROGRAM OUTPUT connector: The output is always the key source signal of the internal titler of the ES-7.
- When inputting the key fill signal to both the DSK VIDEO IN and INPUT-4 connectors, an external signal distributor is required.
- When you connect an external DME switcher, connect the output of the PGM OUT connectors of the DFS-300/300P/500/500P to the AUX INPUT connectors of the ES-7.
- The correspondence between VCRs and the INPUT 1 to 4 connectors of the DFS-300/300P/500/500P is as follows.
  INPUT-1: PLAYER-1
  INPUT-2: PLAYER-2
  INPUT-3: AUX
  (INPUT-4: Titler key fill)
  Set the input signal formats with the input signal format selection switches on the AD board of the DFS-300/300P/500/500P. You cannot set the format from the ES-7 editing software.
- Connect the video monitor that you will use for previews to the VIDEO OUT connector of the recorder VCR.
- In the EditStation editing software, make the Timeline window the active window, select Options from the Settings menu, and set Preview Mode to PB/EE.
- When you connect an external DME switcher, you cannot use the function that superimposes status information on the output of the MONITOR OUTPUT VIDEO connector.
- You can operate the DFS-300/300P/500/500P from the control panel supplied with the DFS-300/300P/500/500P. However, these operations will not be reflected in the screens of the EditStation editing software.

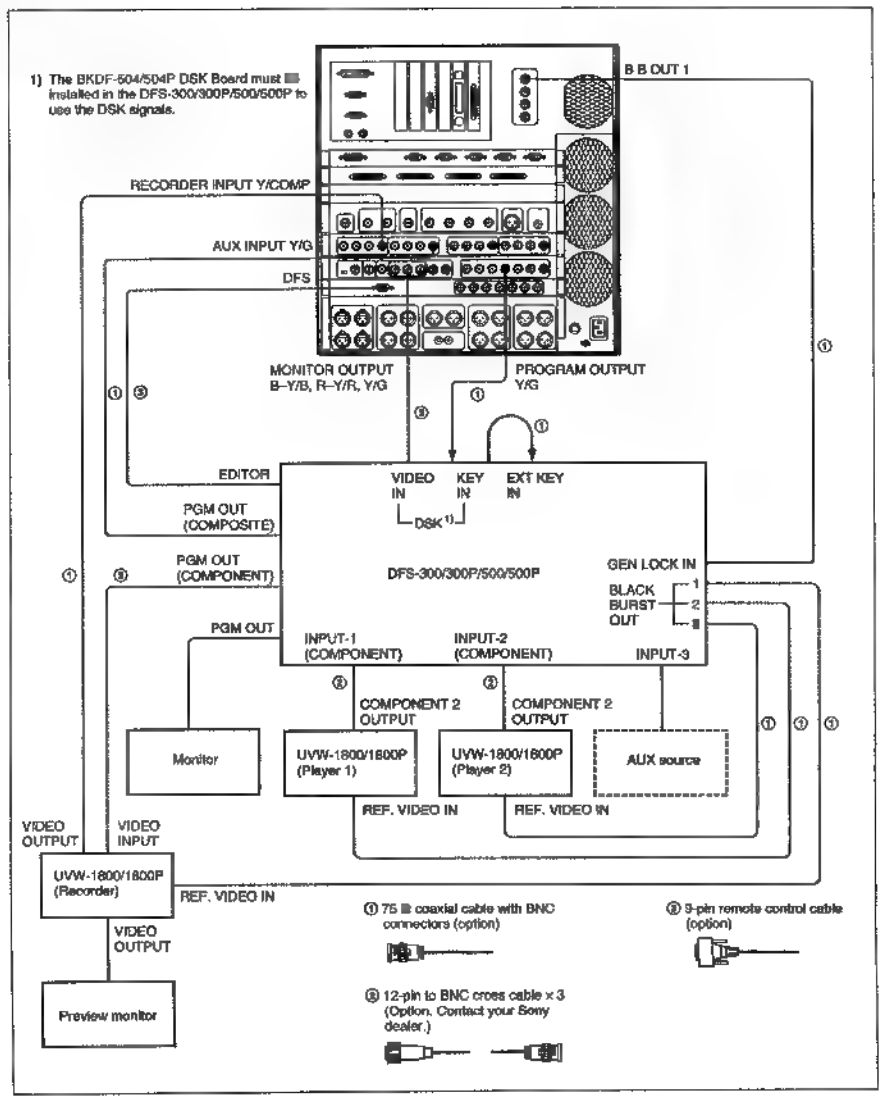

Installing Optional Boards

A variety of expansion boards are available for use with the ES-7. This section explains how to install the optional expansion boards.

Warning

- Always power the unit off before installing an expansion board. Installing boards with the power on risks fire and electric shock.
- Be careful not to injure your hands or fingers by cutting them on the edges of expansion boards or other components.

When installing an optional board, be sure to install it in the correct slot, as shown in the figure below. Installation in the wrong slot can result in damage to the unit.

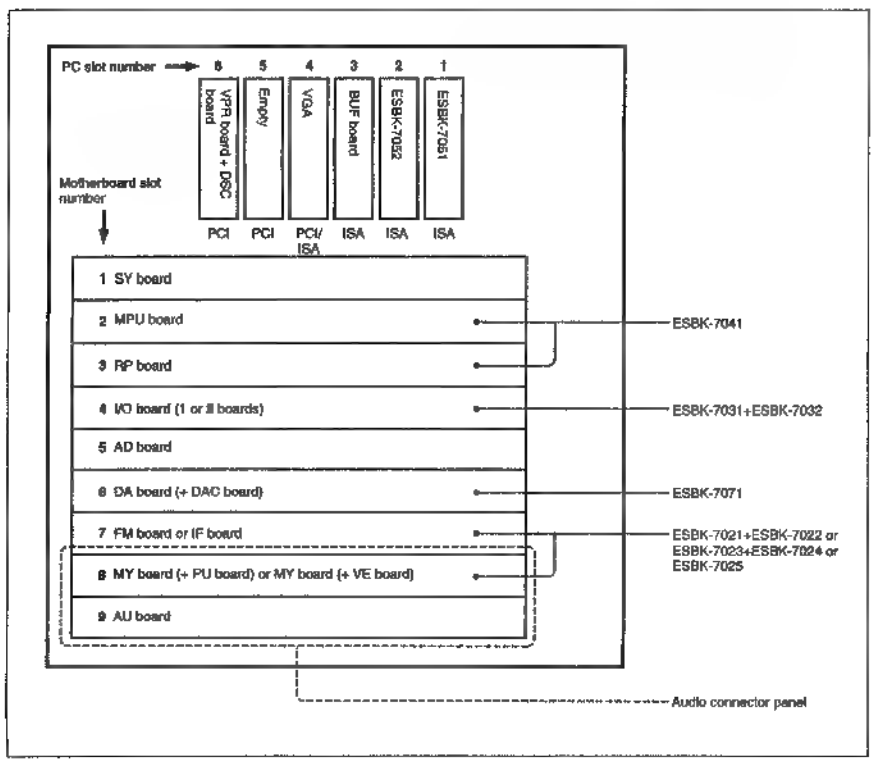

Installing Expansion Boards on the Motherboard

Use the procedure described below to install the following expansion boards on the motherboard.

- ESBK-7041 Disk Recorder Board
- ESBK-7031 QSDI Interface Board
- ESBK-7021 Basic DME Switcher Board
- ESBK-7023 Advanced DME Switcher Board
- ESBK-7025 External Switcher Interface Board

Note

The following optional boards are daughter boards that install on another optional board (parent board). Before installing the parent board on the motherboard, install the daughter board on the parent board.

If you want to install a daughter board on a parent board that has already been installed on the motherboard, remove the parent board from the motherboard and reinstall it after installing the daughter board.

- ESBK-7022 3D Effect Board for Basic DME Switcher *(see page 82)*
- ESBK-7024 3D Effect Board for Advanced DME Switcher *(see page 83)*
- ESBK-7032 SDI Interface Board *(see page 84)*
- DAC Board for ESBK-7071 *(see page 85)*

1 Remove the two screws and remove the blank panel.

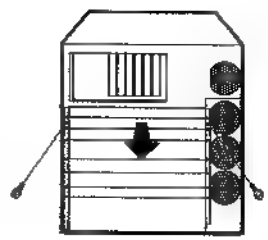

2 Insert the optional board into the specified slot.

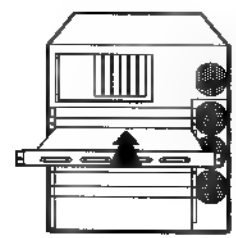

3 Firmly push the board all the way in.

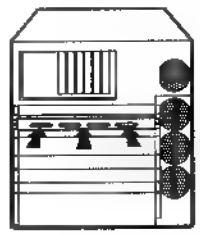

4 Replace the blank panel and fasten with the screws removed in step **1**.

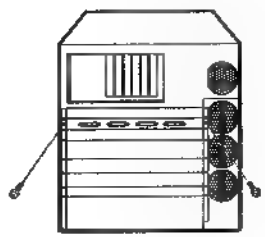

Notes on Installing the DME switcher boards

The ESBK-7021/7023 DME switcher boards are supplied as 2-board sets.
Before attaching the DME switcher boards, remove the audio connector panels.

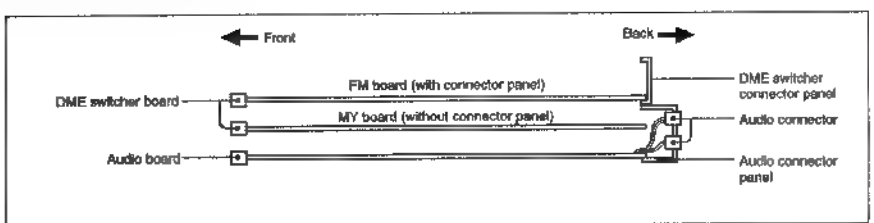

Side view of ES-7

Installing Optional Boards

Installing the ESBK-7021/7023 MY board

1 Remove the two screws from the audio connector panel.

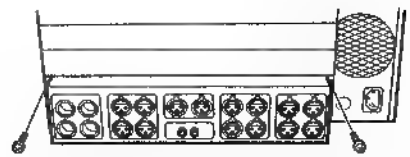

2 Pull the audio connector panel and the AU board halfway out.

Note

Place the ES-7 on a desk or table with enough working space to avoid applying excessive force to the cables connecting the AU board to the audio connector panel.

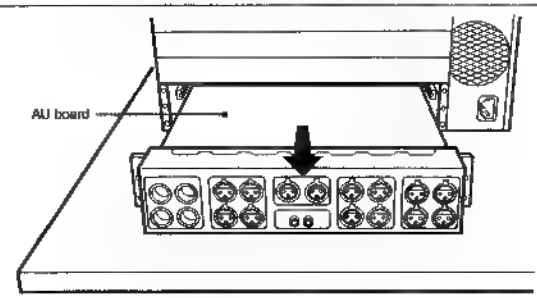

3 Remove the cables connecting the AU board to the audio connector panel.

4 Install the MY board of ESBK-7021 or ESBK-7023 in motherboard slot 8, the slot located just above the AU board slot.

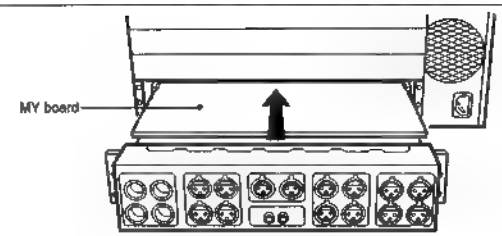

5 Repeat steps **1** to **3** in reverse to return the AU board and audio connector panel to their original positions.

For the positions of the motherboard slots for the following boards, see page 77.

ESBK-7021 Basic DME Switcher Board or ESBK-7023 Advanced DME Switcher Board

Install the two boards of the ESBK-7021/7023 in the motherboard slots shown below.

Board name	Position
FM board	Motherboard slot 7
MY board	Motherboard slot 8

Installation Notes

- When installing the ESBK-7022/7024 3D Effect Board together with the DME switcher board, mount the 3D Effect Board on the MY board of the DME switcher board before installing the DME switcher board in the motherboard slot.

For installation of the 3D effect boards, see "Installing the ESBK-7022 3D Effect Board for Basic DME Switcher" (page 82), or "Installing the ESBK-7024 3D Effect Board for Advanced DME Switcher" (page 83).

- The motherboard slot for the MY board is located behind the audio connector panel. The audio connector panel must be removed before installing the board.

For installation of the MY board, see "Installing the ESBK-7021/7023 MY board" (page 80).

ESBK-7025 External Switcher Interface Board

Install the two boards of the ESBK-7025 in the positions shown below.

Board name	Position
DAC board	On the video output (DA) board
IF board	Motherboard slot 7

For more information about installing the DAC board, see "Installing the adapter board (DAC) supplied with ESBK-7071 ESDraw" (page 85).

Note

If ESDraw and the ESBK-7071 DAC board are already installed, you do not need to install the DAC board on the external switcher video output (DA) board.

ESBK-7041 Disk Recorder Board

Install the two boards of the ESBK-7041 in the motherboard slots shown below.

Board name	Position
MPU board	Motherboard slot 2
RP board	Motherboard slot 3

ESBK-7031 QSDI Interface Board

Install the ESBK-7031 QSDI Interface Board in motherboard slot 4.

Note

When installing both the ESBK-7031 and the ESBK-7032 SDI Interface Board, mount the SDI Interface Board on the IO board before installing the ESBK-7031 in the motherboard slot.

For more information about installing the ESBK-7032, see "Installing the ESBK-7032 SDI Interface Board" (page 84).

Installing the ESBK-7022 3D Effect Board for Basic DME Switcher

Proceed as follows to install the ESBK-7022 board on the MY-74 board of the ESBK-7021 Basic DME Switcher Board. (The MY-74 board is the board without a connector panel.)

1 Press the ESBK-7022 board down onto the MY-74 board until the two connectors on the ESBK-7022 are firmly seated in the two connectors on the MY-74 board.

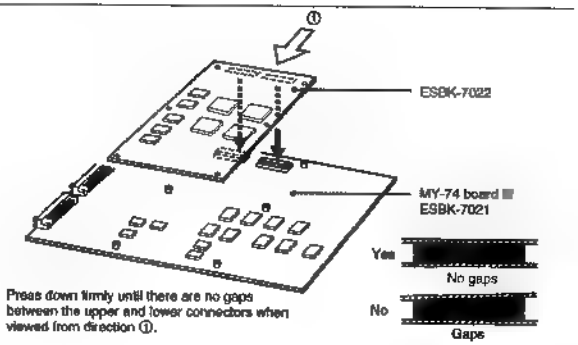

Press down firmly until there are no gaps between the upper and lower connectors when viewed from direction ①.

2 Using the supplied screws, fasten the ESBK-7022 board to the MY-74 board.

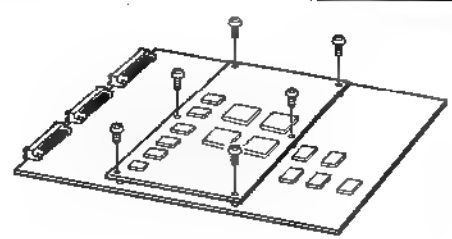

3 Remove the connector panel of the FM-43 board of the ESBK-7021.

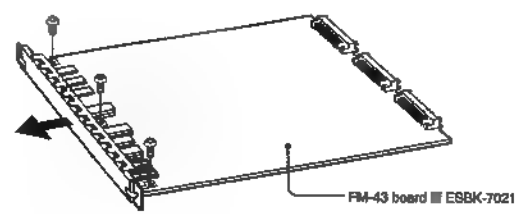

4 Insert the two ROMs (IC5 and IC6) supplied with the ESBK-7022 into the sockets of the FM-43 board of the ESBK-7021 board. When inserting, align the notches on the ROMs with the notches in the sockets. After inserting the ROMs, attach the connector panel of the FM-43 board in its original position.

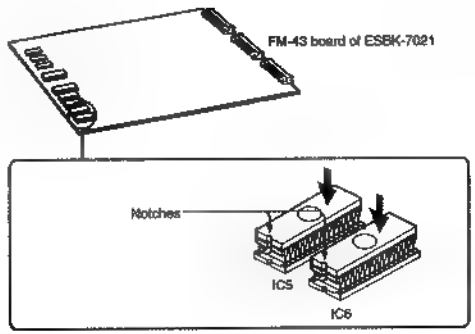

Installing the ESBK-7024 3D Effect Board for Advanced DME Switcher

Proceed as follows to install the ESBK-7024 board on the MY-75 board of the ESBK-7023 Advanced DME Switcher Board. (The MY-75 board is the board without a connector panel.)

1 Press the ESBK-7024 board down onto the MY-75 board until the three connectors on the ESBK-7024 are firmly seated in the three connectors on the MY-75 board.

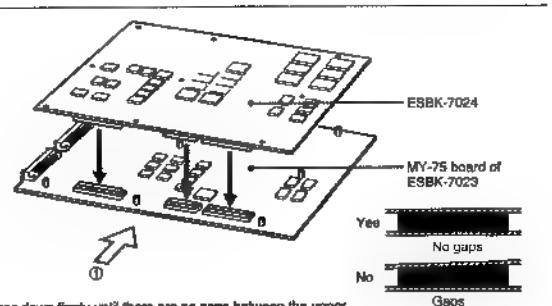

2 Using the supplied screws, fasten the ESBK-7024 board to the MY-75 board.

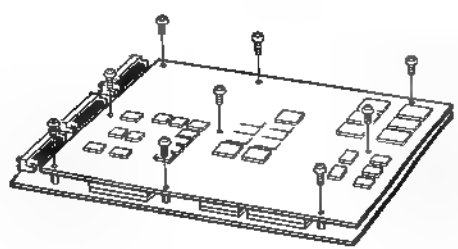

Installing the ESBK-7032 SDI Interface Board

Proceed as follows to install the ESBK-7032 board on the ESBK-7031 QSDI Interface Board.

1 Press the ESBK-7032 board down onto the ESBK-7031 board until the two connectors on the ESBK-7032 are firmly seated in the two connectors on the ESBK-7031 board.

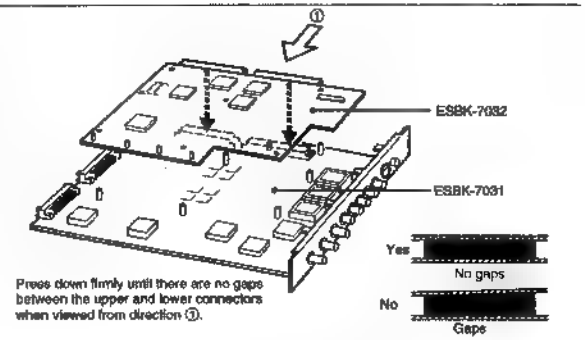

2 Using the supplied screws, fasten the ESBK-7032 board to the ESBK-7031 board.

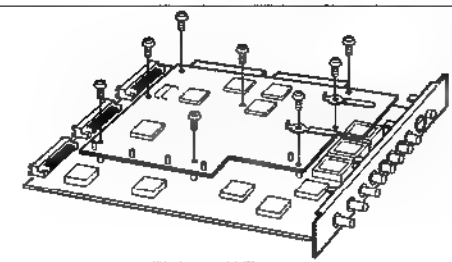

3 Using the coaxial cables supplied with the ESBK-7032, connect the SDI input and output connectors on the ESBK-7031 connector panel to the mini BNC connectors on the ESBK-7032 board.

Connect to the destinations shown in the illustration.

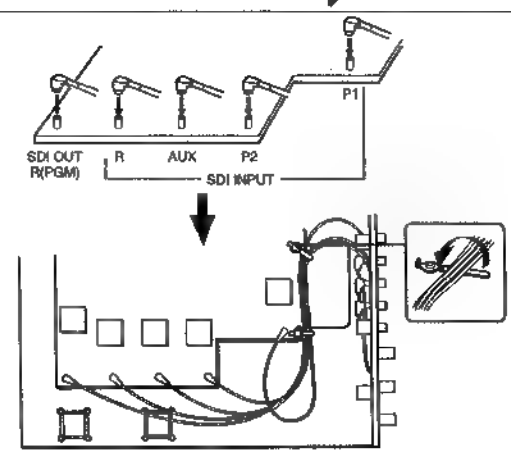

Installing the adapter board (DAC) supplied with ESBK-7071 ESDraw

An adapter board (DAC) is supplied with the ESBK-7071 ESDraw drawing software. Install this board on the video signal output board.

1 Remove the video signal output board.

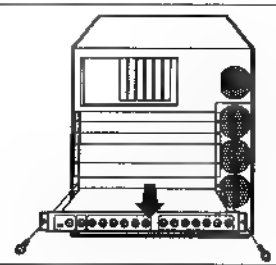

2 Press down firmly until the connectors of the DAC board are completely seated in the connectors of the video signal output board.

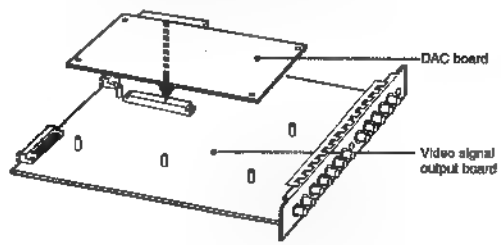

3 Using the supplied screws, fasten the DAC adapter board to the video signal output board.

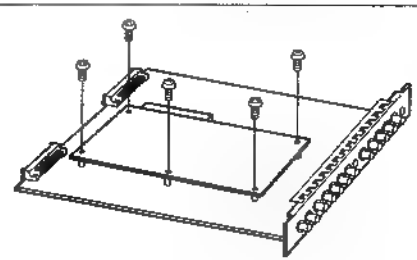

Installing Optional Boards

Proceed as follows to install the following optional expansion boards in the ISA slots of the ES-7.

- ESBK-7051 SCSI Option
- ESBK-7052 Ethernet Option

1 Remove the cover of the ES-7 main unit.

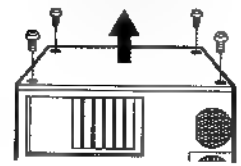

2 Remove the slot cover screw and remove the slot cover.

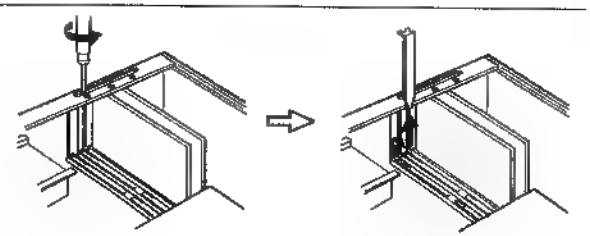

3 Press the expansion board down firmly into the specified slot, and fasten with the screw removed in step **2**.

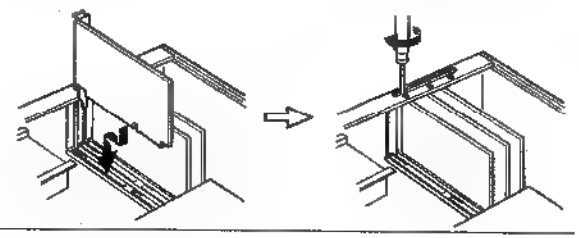

4 Replace the cover of the ES-7 main unit.

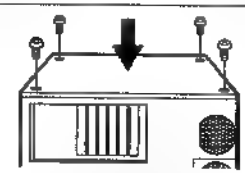

5 Refer to the operation manual of the expansion board and install the required driver software.

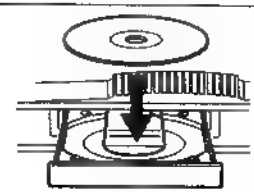

Connectable Video and Audio Equipment

The ES-7 can use status signals sent from video and audio equipment connected to the remote control connectors (PLAYER 1, PLAYER 2, RECORDER, AUX) of the rear panel system control section to automatically detect the device type of the connected equipment, and control the operation of the connected equipment using device constants for the detected device types. The ES-7 has built-in device constants for the following video and audio equipment.

Equipment type	Model
8mm VCR	EVO-9850/9850P
S-VHS VCR	SVO-5800/5800P, SVP-5600/5600P
Betacam VCR	BVW-50/50P/60/60P/65/65P/70/70P/75/75P/D265/D75/D75PS, UVW-1600/1600P/1700G/1700GP/1800/1800P, PVW-2600/2600P/2650/2650P/2800/2800P
U-matic VCR	BVU-900/900P/920/950/950P, VO-9800/9800P/9850/9850P
4:2:2 component digital (D1) VCR	DVR-1000 (525)/1000 (625)/2100 (525)/2100 (625)
1-inch VTR	BVH-3000/3000PS/3100/3100PS
Digital Betacam VCR	DVW-500/500P/A500/A500P/510/510P/A510/A510P
DVCAM VCR	DSR-85/85P/80/80P/60/60P
DAT recorder	PCM-7030/7050
CD player	CDP-3100

Setting the Video Signal Format

After connecting the VCRs and other peripheral equipment in your system, use the EditStation Settings menu to set their video signal formats.

1 Log on and start EditStation using the procedures explained in "Starting the System" *(page 17)* and "Starting EditStation" *(page 30)*.

The EditStation initial screen appears.

2 Make the Clip Bin window the active window and select Device from the Setting menu.

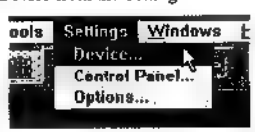

The Device dialog box appears.

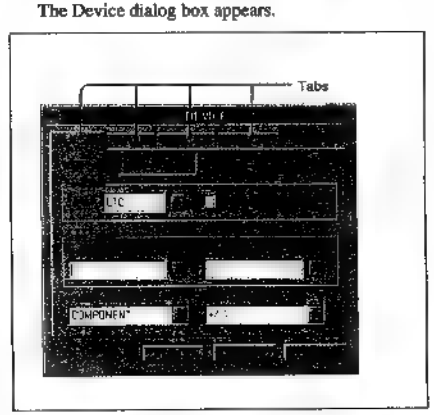

3 Click the tab for the VCR whose signal format you want to set.

4 Click the ▣ button for Video Format.

A list of video formats appears. Click the ↓ or ↑ scroll button to scroll the list and display other formats.

5 Select the desired video signal format from the list and click it.

The selected format is highlighted in the list box.

6 Click the OK button.

This completes the selection of the video signal format. You can begin editing with the selected format.

For more information about the other items in the Settings menu, see the online manual.

Setting the Date and Time

Whenever you save data with this unit, the current date and time are saved together with the data. The correct date and time are not set when the unit is shipped from the factory, so ■ sure to carry out the following procedure to set the date and time before saving your data.

1 In the Program Manager window, double click the Main icon ■ open the Main group, and double click the Control Panel icon.

The Control Panel window opens.

2 In the Control Panel window, double click the Date/Time icon.

The Date/Time dialog box opens.

3 Set the date and time, and click the OK button.

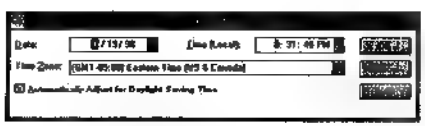

When the dialog box opens, the month is highlighted. Set the month and press the TAB key to move to the next item. Continue by making the correct setting and pressing the TAB key to move to the next item in the order Date, Time Zone, Daylight Saving Time Adjustment and Time. To return to the previous item, press the TAB key while holding down the Shift key.
When finished, click the OK button to save the changes and close the Date/Time dialog box.

4 ■ the Control Panel window, double click the ⊟ button in the upper left corner to close the Control Panel window.

5 In the Main window, double click the ⊟ button to close the Main window.

Reinstalling the Software

If the EditStation software fails to operate because of corrupt program files, reinstall the software using the following procedure.

1 Log on using the procedure explained in "Starting the System" *(page 17)*.

The Program Manager window appears.

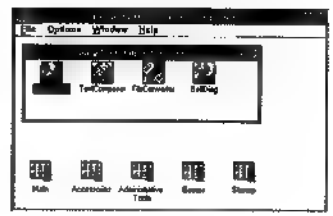

2 Insert the supplied CD-ROM disc.

For more information about inserting CD-ROM discs, see "Inserting and removing CD-ROM Discs" (page 68).

3 Select Run from the File menu.

The following dialog box appears.

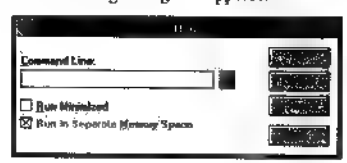

4 Enter "D:\SETUP.EXE" on the command line and click the OK button.

The setup program starts. Follow the instructions displayed on the screen.

5 When the installation of the software in complete, press the CD-ROM EJECT button to remove the CD-ROM disc.

Registering User Names and Passwords

You can register users and passwords in prevent persons who do not have user names and passwords from using the system.
The following operations can be performed by users who belong to the Administrators group or the Power Users group. Users who log on using the factory default configuration (user name: "Creator"; password: none), belong to the Administrators group.

For more information about user groups, refer to the "User Manager" section in the Windows NT Workstation System Guide.

To register user names and passwords, proceed as follows.

1 Log on using the procedure explained in "Starting the System" *(page 17)*.

The Program Manager window appears.

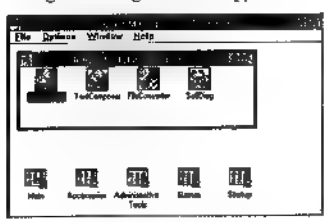

2 Double click the Administrative Tools group icon.

A group window like the one below opens.

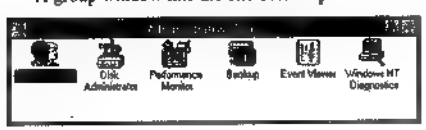

3 Double click the User Manager icon.

The User Manager window opens.

4 Select New User from the User menu.

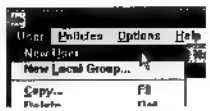

The New User dialog box appears.

5 Enter a user name in the Username field.

User names can be up to 20 characters long. You can use any combination of uppercase and lowercase letters and any other characters except the following:
" / \ [ ] : ; | = , + * ? < >

You cannot assign a user name that has already been registered.

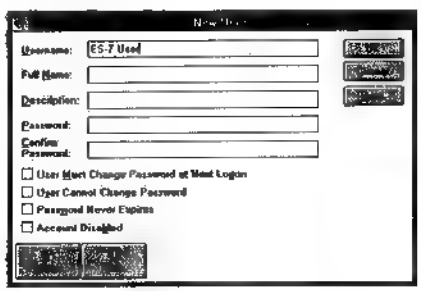

6 Enter a password in the Password field and the Confirm Password field.

Passwords can be up to 14 characters long. Uppercase letters are distinguished from lowercase letters.

(Continued)

7 Click the Groups button.

A Group Memberships dialog box like the one below appears.

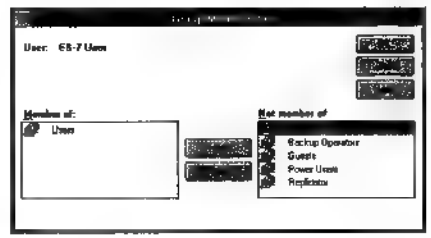

8 From the Not member of list, select the Administrators, highlighting it, and click the Add button.

The Administrators is added to the Member of list.

9 Click the OK button.

The Group Memberships dialog box closes.

10 Click the OK button of the New User dialog box.

The New User dialog box closes.
The user name that you just registered is displayed in the Username list of the User Manager window.

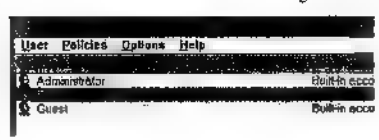

11 Select Exit from the User menu.

The User Manager window closes.

Executing the Self Diagnostics

The ES-7 has a self-diagnostics function that helps you to locate the cause of the problem when trouble occurs in the system.
Technical service will be able ■ assist you more rapidly if you report the results of self diagnostics when requesting repairs for the system.
This section will explain the basics of using the self diagnostics function.

For more detailed information, refer to the online manual.

Proceed as follows to execute the self diagnostics.

1 Log on using the procedure explained in "Starting the System" *(page 17)*.

The Program Manager window appears.

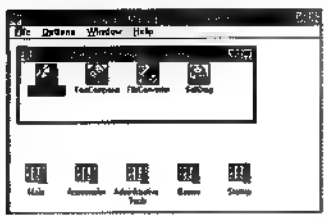

2 Click the SelfDiag icon in the Sony EditStation group.

The initial screen of the self diagnostics software appears.

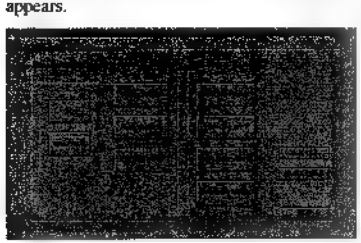

3 Click the System Check button.

The self diagnostics start, and the operation of each block in the system ■ checked.
If any errors are discovered by the self diagnostics, they are recorded in an error log[1].

To check a specific block

In ■e initial screen of the self diagnostics software, click the button for the block you want to check.

To view the error log

In the initial screen of the self diagnostics software, click the Error Log button.

For information about the contents of the error log, refer to the online manual.

1) A file that records the date and time of the self diagnostics and the error status of each block.

Pin Assignments

[redacted]

To connect external equipment to the GPI connectors on the rear panel of the ES-7, attach the supplied GPI connectors ■ the connection cables.
The GPI pin assignments on the ES-7 side are as follows.

GPI (PARALLEL) connector

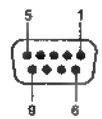

Pin no.	Signal
1	TTL1 OUT
2	RELAY1
3	RETURN1
4	TTL3 OUT
5	GND
6	TTL2 OUT
7	RELAY2
8	RETURN2
9	TTL4 OUT

GPI (232) connector

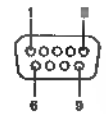

Pin no.	Signal
1	N.C.
2	GPI RXD IN
3	GPI TXD OUT
4	(DTR)
5	SIGNAL GND
6	(DSR)
7	(RTS)
8	(CTS)
9	N.C.

Pins 4 and 6 are connected internally.
Pins 7 and 8 are connected internally.

[redacted]

PRINTER connector

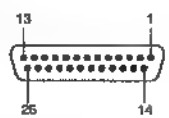

Pin no.	Signal	Pin no.	Signal
1	STROBE	10	ACKNLG
2	DATA1	11	BUSY
3	DATA2	12	PE
4	DATA3	13	SLCT
5	DATA4	14	AUTOFD
6	DATA5	15	ERROR
7	DATA6	16	INIT
8	DATA7	17	SLCTIN
9	DATA8	18 to 25	GND

COM 1 and COM 2 connectors

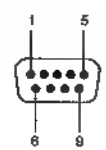

Pin no.	Signal
1	CD
■	RD
3	TD
4	ER
5	SG
6	DR
7	RS
8	CS
9	RI

DISPLAY MONITOR connector

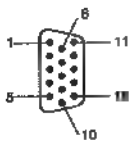

Pin no.	Signal
1	Red Video
2	Green Video
3	Blue Video
4	Not Used
5	Ground
6	Red Return
7	Green Return
8	Blue Return
9	No Connection
10	Sync Return
11	Not Used
12	Not Used
13	Horizontal Sync
14	Vertical Sync
15	Not Used

Front Panel

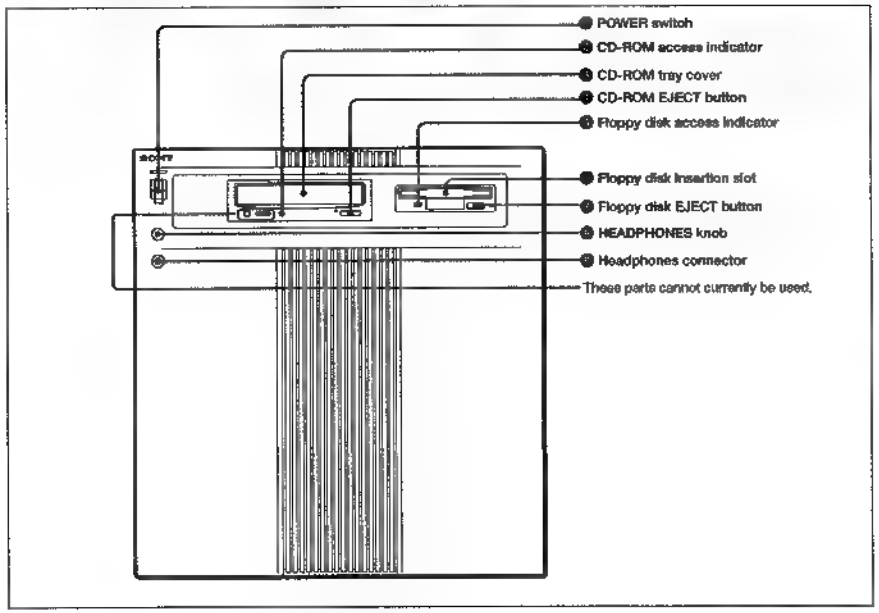

❶ POWER switch
Turns the power on and off. Be sure to carry out the Windows NT shutdown procedure before turning the power off.

For the Windows NT shutdown procedure, see "Shutting Down the System" (page 26).

❷ CD-ROM access indicator
Normally lights in green, and lights in orange to indicate that the unit is reading from a CD-ROM disc.

❸ CD-ROM tray cover
This is the cover of the tray where CD-ROM discs are placed.

❹ CD-ROM EJECT button
Press this button to open the CD-ROM tray to insert or remove a disc. To close the tray, push it in.

❺ Floppy disk access indicator
Lights to indicate that the unit is writing to or reading from a floppy disk.

❻ Floppy disk insertion slot
Insert 3.5-inch floppy disks here.

❼ Floppy disk EJECT button
Press to eject a floppy disk.

Note

Do not press this button while the floppy disk access indicator is lit.

❽ HEADPHONES knob
Controls the volume of the headphones connected to the headphones connector ❾.

❾ Headphones connector (stereo phone jack)
Connect headphones. This connector outputs the same signals as the MONITOR OUTPUT 1/3, 2/4 connectors on the rear panel.

Rear Panel

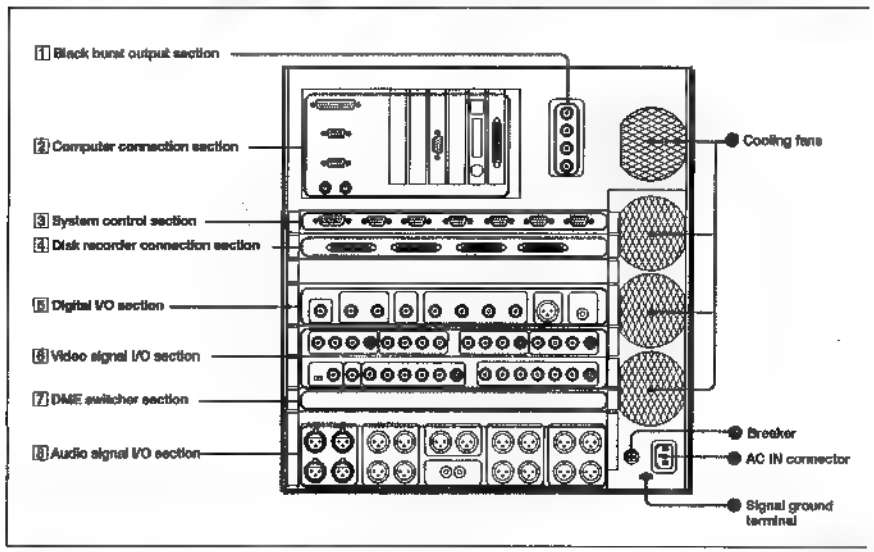

● Cooling fans
These provide air circulation and prevent temperatures from rising inside the unit.

Note

When installing the unit, be sure not to block the vents of the cooling fans.

● Breaker
Excessive current flows in the internal circuits trip this breaker, shutting off the power supply. If this occurs, contact your Sony dealer or Sony service representative.

● AC IN connector
Connect the supplied AC power cord.

● Signal ground terminal
Connect to the ground terminal of a rack or other equipment.

1-47

1 Black burst output section

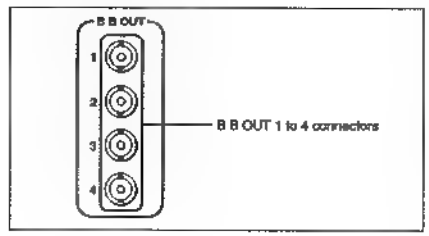

B B OUT 1 to 4 (black burst output signal 1 to 4) connectors (BNC type)
Output black burst signals generated by the built-in sync signal generator.
The same signals are output from all 4 connectors.
Connect these signals to the reference video input connectors (REF. VIDEO IN, GENLOCK IN, SYNC IN, etc.) of your source VCRs ■ synchronize the source VCRs and this unit.

2 Computer connection section

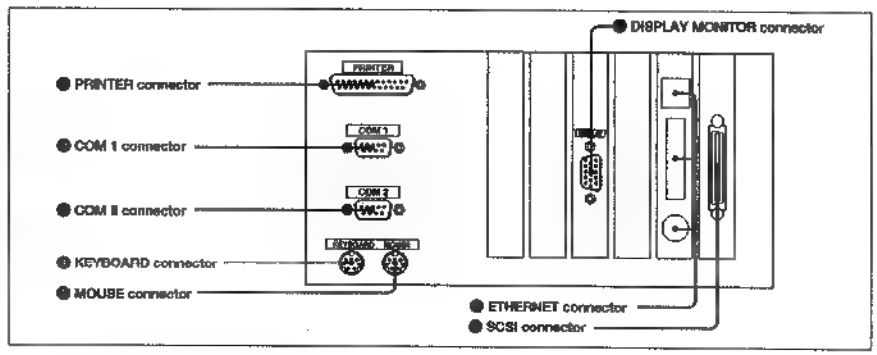

● PRINTER connector (D-sub 25-pin)
Connect a printer to print edit data. Connect a printer equipped with a Centronics compatible interface.
Printer driver software ■ required to control the printer. For details refer to the operating instructions of your printer and the descriptions of the Print Manager in your Windows NT manual.

● COM 1 (serial COM port 1) connector (D-sub 9-pin)
Connect a tablet for use as a drawing input device.

● COM 2 (serial COM port 2) connector (D-sub 9-pin)
Connect an external computer or modem. Use to exchange data with external equipment over the RS-232C interface.

● KEYBOARD connector (mini DIN 6-pin)
Connect the supplied keyboard.

● MOUSE connector (mini DIN 6-pin)
Connect the supplied mouse.

● DISPLAY MONITOR connector (D-sub 15-pin)
Connect an optional computer monitor.
Connect a monitor that supports a vertical refresh rate of 75 Hz at a resolution of 1024 × 768 pixels.

● ETHERNET connector (option)
This connector is attached to the ESBK-7052 Ethernet Option board. Connect an Ethernet cable to exchange graphics and edit data with other equipment over an Ethernet network.

Rear Panel

● SCSI connector (option)
This connector is attached to the ESBK-7051 SCSI Option board. It allows you to connect an MO drive. The MO drive is used ■ store edit data with index pictures, and to exchange edit data with other equipment.

3 System control section

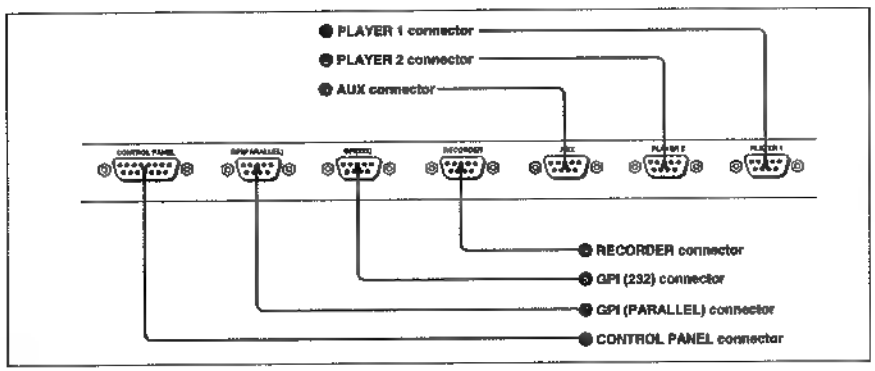

● PLAYER 1 connector (D-sub 9-pin)
Outputs control signals for the player 1 VCR. Connect to the REMOTE connector of the player 1 VCR.

● PLAYER 2 connector (D-sub 9-pin)
Outputs control signals for the player 2 VCR. Connect to the REMOTE connector of the player 2 VCR.

● AUX (auxiliary) connector (D-sub 9-pin)
Outputs control signals for an auxiliary VCR. Connect to the REMOTE connector of the VCR connected to the AUX connector..

● RECORDER connector (D-sub 9-pin)
Outputs control signals for the recorder VCR. Connect to the REMOTE connector of the recorder VCR.

● GPI (232) connector (D-sub 9-pin)
Outputs commands to control external equipment. This connector complies with the RS 323C standard.

See page 94 for the pin assignments.

● GPI (PARALLEL) connector (D-sub 9-pin)
Outputs timing pulses to control external equipment. Connect to the GPI input connector of the external equipment. There are 4 ports. The signals output by the 4 ports are as follows.
Ports 1, 2: TTL output and relay output
Ports 3, 4: TTL output

See page 94 for the pin assignments.

● CONTROL PANEL connector (D-sub 15-pin)
Connect the optional ESBK-7011 Control Panel.

4 Disk recorder connection section (option)

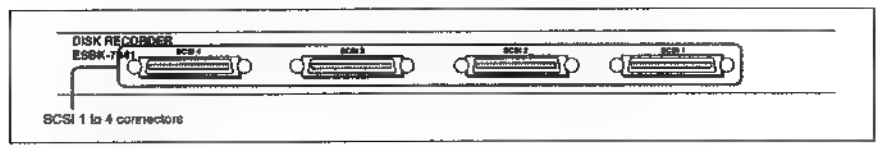

SCSI 1 to 4 connectors (50-pin high-density SCSI-2, option)
Connect to the SCSI IN 1 to 4 connectors of optional ESBK-7045 Disk Units.

5 Digital I/O section (option)

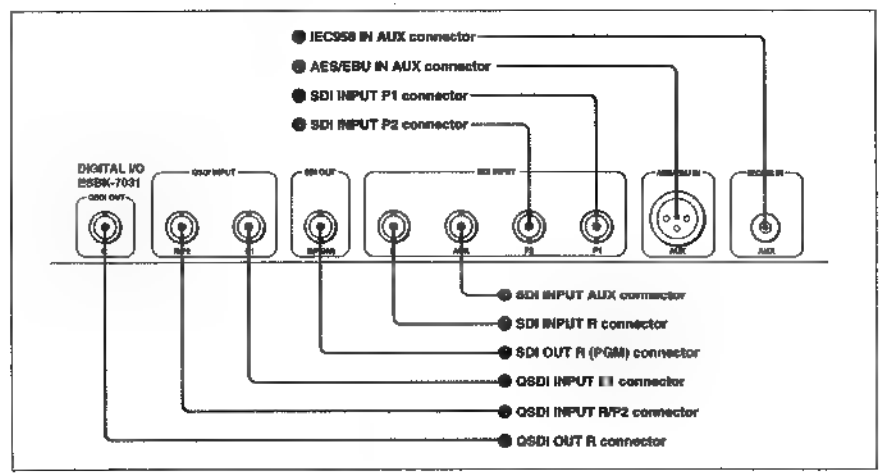

● IEC958 IN AUX (IEC958 format digital audio input) connector (IEC958 connector)
Input IEC958 format digital audio signals. Connect to the IEC958 output connector of a CD player.

● AES/EBU IN AUX (AES/EBU format digital audio input) connector (XLR 3-pin)
Input AES/EBU format digital audio signals. Connect to the AES/EBU output connector of a DAT player or other audio equipment.

● SDI INPUT P1 (serial digital interface player 1 input) connector (BNC type)
Input D1 format video and audio signals. Connect to the serial digital video and audio signal output connector of the VCR, when connecting a DVR-series or DVW-series VCR as player 1. When connecting a DSR-series VCR to perform linear editing with digital signals, connect to the SDI output connector of the DSR-series VCR.

● SDI INPUT P2 (serial digital interface player 2 input) connector (BNC type)
Input D1 format video and audio signals. Connect ■ the serial digital video and audio signal output connector of the VCR, when connecting a DVR-series or DVW-series VCR as player 2. When connecting a DSR-series VCR to perform linear editing with digital signals, connect ■ the SDI output connector of the DSR-series VCR.

● SDI INPUT AUX (serial digital interface auxiliary input) connector (BNC type)
Input D1 format video and audio signals. Connect to the serial digital video and audio signal output connector of the VCR when connecting a DVR-series or DVW-series VCR as an auxiliary VCR. When connecting a DSR-series VCR to perform linear editing with digital signals, connect to the SDI output connector of the DSR-series VCR.

● SDI INPUT R (serial digital interface recorder input) connector (BNC type)
Input D1 format video and audio signals. Connect to the serial digital video and audio signal output connector of the VCR when connecting a DVR-series or DVW-series VCR as the recorder VCR. When connecting a DSR-series VCR to perform linear editing with digital signals, connect to the SDI output connector of the DSR-series VCR.

● SDI OUT II (PGM) (serial digital interface recorder (program) output) connector (BNC type)
Output D1 format video and audio signals to the recorder. Connect to the serial digital video and audio signal input connector of the VCR when using a DVR-series or DVW-series VCR as the recorder.

● QSDI INPUT P1 (quarter-inch serial digital interface player 1 input) connector (BNC type)
Input QSDI format video and audio signals. Connect to the QSDI output connector of the VCR when using a DSR-series VCR as player 1.

● QSDI INPUT R/P2 (quarter-inch serial digital interface recorder/player 2 input) connector (BNC type)
Input QSDI format video and audio signals. Use for uploading in non-linear editing. Connect to the QSDI output connector of the VCR when using a DSR-series VCR as the recorder or player 2.

● QSDI OUT R (quarter-inch serial digital interface recorder output) connector (BNC type)
Output QSDI format video and audio signals to the recorder. Use to download edit results and for backup recording. Connect to the QSDI input connector of the VCR when using a DSR-series VCR as the recorder. When using a DSR-series VCR on the player side only in non-linear editing, connect to the QSDI input connector of the DSR-series VCR for backup recording.

8 Video signal I/O section

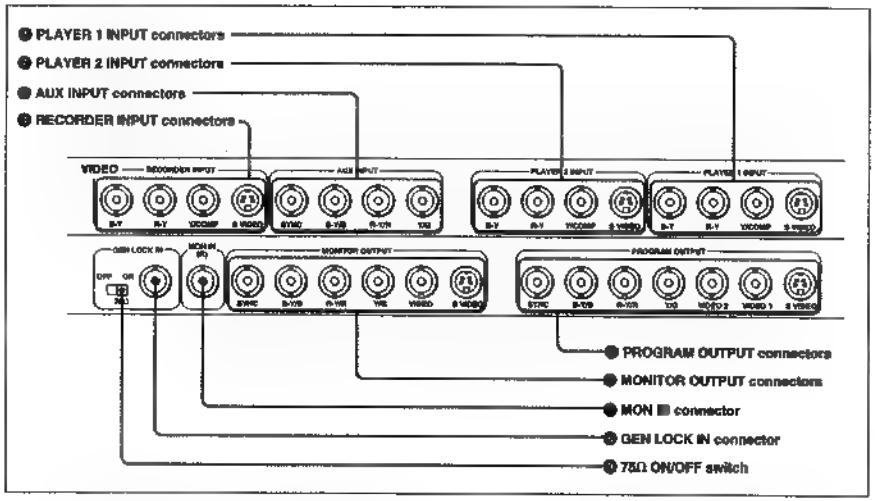

When the component video input and output connectors of a connected VCR are multi-connectors, connect with a cable having a 12-pin multi-connector on one end and 3, 4, or 5 BNC connectors on the other end. For more information about these cables, contact your Sony dealer or Sony service representative.

Depending on the utilized connectors, an EditStation software setting may be required to specify the input signal format. For details, see "Setting the Video Signal Format" (page 88).

● PLAYER 1 INPUT connectors
Input video signals from an external VCR. Connect to the video signal output connectors of the player 1 VCR.

S VIDEO connector (mini DIN 4-pin): Connect to the S-video output connector of the player 1 VCR.

Y/COMP (composite) connector (BNC type): Connect to the Y output connector or the composite video output connector of the player 1 VCR. Specify whether to input Y signals or composite signals by an EditStation software setting.

R–Y connector (BNC type): Connect to the R–Y output connector of the player 1 VCR.

B–Y connector (BNC type): Connect to the B–Y output connector of the player 1 VCR.

● PLAYER 2 INPUT connectors
Input video signals from an external VCR. Connect to the video signal output connectors of the player 2 VCR.

S VIDEO connector (mini DIN 4-pin): Connect to the S-video output connector of the player 2 VCR.

Y/COMP (composite) connector (BNC type): Connect ■ the Y output connector or the composite video output connector of the player 2 VCR. Specify whether to input Y signals or composite signals by an EditStation software setting.

R–Y connector (BNC type): Connect to the R–Y output connector of the player 2 VCR.

B–Y connector (BNC type): Connect to the B–Y output connector of the player 2 VCR.

1-49

Rear Panel

● AUX INPUT (auxiliary input) connectors
Input video signals from an external VCR. Connect to the video signal output connectors of auxiliary video equipment.

Y/G connector (BNC type): Connect to the Y output connector, composite video output connector, or G output connector of auxiliary video equipment. Specify whether to input Y signals, composite signals, or G signals by an EditStation software setting.

R–Y/R connector (BNC type): Connect to the R–Y or R output connector of auxiliary video equipment.

B–Y/B connector (BNC type): Connect to the B–Y or B output connector of auxiliary video equipment.

SYNC connector (BNC type): Connect to the reference video signal output connector of auxiliary video equipment (in RGBS mode only).

● RECORDER INPUT connectors
Input video signals from an external recorder VCR. Connect to the video signal output connectors of the recorder VCR.

S VIDEO connector (mini DIN 4-pin): Connect to the S-video output connector of the recorder VCR.

Y/COMP (composite) connector (BNC type): Connect to the Y output connector or the composite video output connector of the recorder VCR. Specify whether to input Y signals or composite signals by an EditStation software setting.

R–Y connector (BNC type): Connect to the R–Y output connector of the recorder VCR.

B–Y connector (BNC type): Connect to the B–Y output connector of the recorder VCR.

● PROGRAM OUTPUT connectors
Output the video signals recorded by the recorder. Connect to the video input connector of the video equipment used as the recorder or of a video monitor.

S VIDEO connector (mini DIN 4-pin): Connect to the S-video input connector of the recorder.

VIDEO 1, 2 connectors (BNC type): Connect to the composite video input connectors of the recorder or video monitor.

Y/G connector (BNC type): Connect to the Y input connector or the G input connector of the recorder. Specify whether to output Y signals or G signals by an EditStation software setting.

R–Y/R connector (BNC type): Connect to the R–Y input connector or the R input connector of the recorder. Specify whether to output R–Y signals or R signals by an EditStation software setting

B–Y/B connector (BNC type): Connect to the B–Y input connector or the B input connector of the recorder. Specify whether to output B–Y signals or B signals by an EditStation software setting.

SYNC connector (BNC type): Output sync signals generated by the built-in sync signal generator. Connect to the reference video input connector of the recorder only when you output signals from this unit to the recorder in RGBS mode.

● MONITOR OUTPUT connectors
Output the video signals of the VCR selected automatically by this unit during a preview, recording, or playback. At other times, output the video signals of the VCR selected with this unit as the source VCR. Connect composite or S-video output to the video input connector of the preview monitor. Normally, connect composite video output to the preview monitor to check video output. When you want to check video output with high video quality, connect Y/R–Y/B–Y component signal output or RGB output to a program monitor.

S VIDEO connector (mini DIN 4-pin): Connect to the S-video input connector of a video monitor.

VIDEO connector (BNC type): Connect to the composite video input connectors of a video monitor. Timecode and other status information is superimposed on the video output from this connector.

Y/G connector (BNC type): Connect to the Y input connector or the G input connector of a video monitor. Specify whether to output Y signals or G signals by an EditStation software setting.

R–Y/R connector (BNC type): Connect to the R–Y input connector or the R input connector of a video monitor. Specify whether to output R–Y signals or R signals by an EditStation software setting.

B–Y/B connector (BNC type): Connect to the B–Y input connector or the B input connector of a video monitor. Specify whether to output B–Y signals or B signals by an EditStation software setting.

SYNC connector (BNC type): Output sync signals generated by the built-in sync signal generator. Connect to the reference video input connector of a video monitor only when you output signals from this unit to the video monitor in RGBS mode.

● MON IN connector
Input composite video signals for the built-in monitor switcher. Connect to the composite video output connector of the recorder VCR.

● GEN LOCK IN connector
Input an external reference video signal. Use a T connector for a through connection not terminated at this unit.

● 75Ω ON/OFF switch
Specify whether or not to terminate with a 75Ω terminator the external reference video signal input to the GEN LOCK IN connector ●.

ON: Terminate.
OFF: Do not terminate.

7 DME switcher section (option)

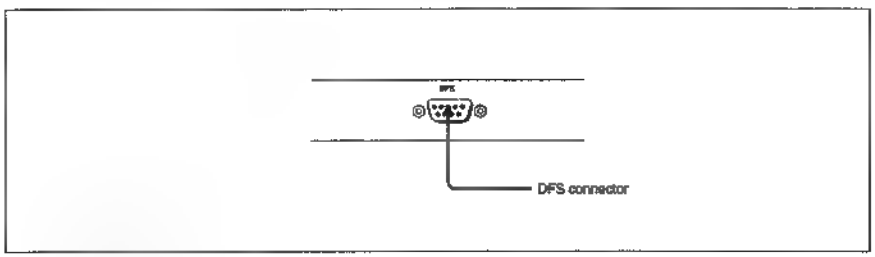

DFS connector (D-sub 9-PIN)
Outputs signals to control an external DME switcher. Connect to the EDITOR connector of the DFS-300/300P/500/500P.

Note

When connecting the ES-7 and the DFS-300/300P/500/500P, set the editor selection switch on the system control board of the DFS-300/300P/500/500P as follows.

DFS-300/300P: PVE-500
DFS-500/500P: BVE-900

About the ROM version number of the DFS-500/500P

To connect a DFS-500/500P switcher to this unit, the version of the ROM on the SY board of the DFS-500/500P must be 1.04 or higher. The following DFS-500/500P switchers meet this requirement.

- DFS-500 with serial number 12000 or higher
- DFS-500P with serial number 24000 or higher
- DFS-500 with BKDF-504/504P installed

To connect a DFS-500/500P other than those listed above, a ROM update is required. For details, contact your Sony dealer or a Sony service representative.

Rear Panel

[8] Audio signal I/O section

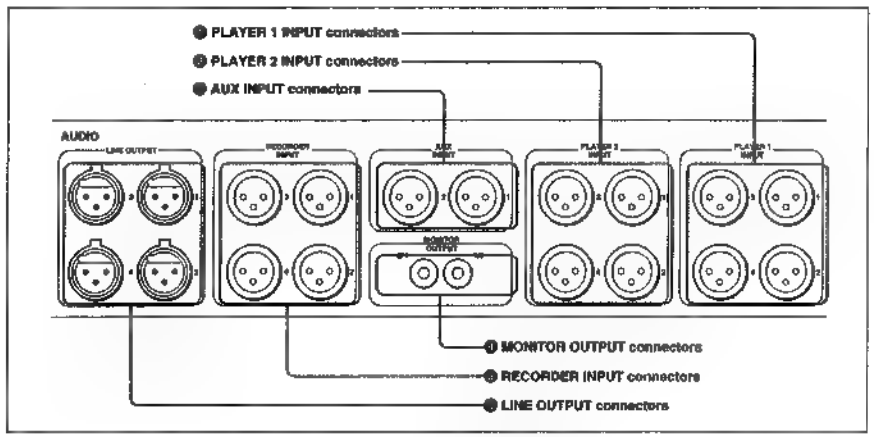

● PLAYER 1 INPUT 1 to 4 connectors (XLR 3-pin)
Input analog audio signals from external equipment. Connect to the audio channel 1 to 4 output connectors of the player 1 VCR.

● PLAYER 2 INPUT 1 to 4 connectors (XLR 3-pin)
Input analog audio signals from external equipment. Connect to the audio channel 1 to 4 output connectors of the player 2 VCR.

● AUX INPUT (auxiliary input) 1 to 2 connectors (XLR 3-pin)
Input analog audio signals from external equipment. Connect to the audio channel 1 to 2 output connectors of auxiliary audio equipment.

● MONITOR OUTPUT connectors (phono jack)
Output the analog audio signals of the equipment currently selected as the source by this unit. Connect to the audio input connectors of the audio amplifier used as a monitor. Specify output of channels 1/2 or channels 3/4 by an EditStation software setting.

Refer to the online manual for details about the software setting.

White connector: channel 1 or channel 3
Red connector: channel 2 or channel 4

● RECORDER INPUT 1 to 4 connectors (XLR 3-pin)
Input analog audio signals from external equipment. Connect to the audio channel 1 to 4 output connectors of the recorder VCR.

● LINE OUTPUT connectors (XLR 3-pin)
Output the analog audio signals recorded by the recorder. Connect to the audio channel 1 to 4 input connectors of the recorder VCR.

Error Messages

The EditStation displays an error message when a problem occurs.
The meaning of the error messages and the steps to take to correct the problem are as follows. If the problem persists after you have taken the steps indicated below, contact your Sony dealer or Sony service representative.

Message	Meaning	Steps to Take
Couldn't initialize graphics device.	A graphics device initialization error occurred.	Shut the system down and launch EditStation again after restarting the system.
MARK IN necessary.	An IN point setting is required.	Click the MARK IN button to set an IN point.
MARK OUT necessary.	An OUT point setting is required.	Click the MARK OUT button to set an OUT point.
Delete all clips?	An operation that will delete all clips is about to be performed.	If you really want to delete all clips, click the Yes button. Otherwise click the No button.
Can't close device.	A graphics board access error occurred.	Shut the system down and launch EditStation again after restarting the system.
Can't get pixel clock. Check cable between graphics board and PC.	The cable between the graphics board and PC may be loose.	Check the cable connection on the VPR board. For the location of the VPR board, see page 77.
Can't open device. Check whether other process is using graphics board.	A graphics board access error occurred.	Shut the system down and launch EditStation again after restarting the system.
Mismatch between Device ID and DLL. Use correct DLL.	A graphics board access error occurred.	Shut the system down and launch EditStation again after restarting the system.
Invalid mode.	A graphics board access error occurred.	Shut the system down and launch EditStation again after restarting the system.
Can't map physical memory.	A graphics board access error occurred.	Shut the system down and launch EditStation again after restarting the system.
Can't unmap physical memory.	A graphics board access error occurred.	Shut the system down and launch EditStation again after restarting the system.

1-51

Precautions

Maintaining the Performance of This Unit

Operating and storage conditions

Avoid using or storing the unit in places which are:
- very hot or cold
- damp or dusty
- subject to severe vibrations
- near equipment generating strong electromagnetic currents
- near television or radio transmitting stations or sources of strong radio waves
- subject to severe interference

Maintenance of this unit

Clean the cabinet, panels, keyboard, and mouse by wiping with a soft, dry cloth. Remove severe stains by wiping with a cloth moistened with a neutral solvent, then wipe dry with a soft, dry cloth. Do not clean with alcohol, benzene, thinner, or other volatile liquids. Doing so may damage the finish.

Cleaning the mouse ball

When the ball inside the mouse becomes dirty, remove the ball as shown in the illustration and clean by wiping with a cloth that has been soaked with a neutral solvent. Before cleaning wring the cloth well to remove excess solvent. After cleaning, wipe the ball dry with a soft, dry cloth.

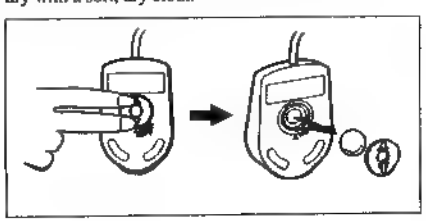

Protecting Data on the Hard Disk

The ES-7 EditStation is equipped with an internal hard disk. Observe the following precautions to protect the data on the internal hard disk.
- Do not install the unit in an unstable location or where it will be subject to vibrations.
- Never move the unit while it is powered on.
- Make periodic backups of the data on the internal hard disk. Data on the hard disk cannot be recovered if it is lost because of accidents or hardware malfunctions.

Handling CD-ROM Discs

The EditStation is supplied with a CD-ROM disc containing software and an online manual. If proper care is not exercised when handling the CD-ROM disc, the data may become unreadable or other errors may occur. Observe the following precautions when handling the CD-ROM disc.

CD-ROM disc handling precautions

- Do not touch the disc surface directly with your hands. Hold the disc by the edge and do not touch the data surface.

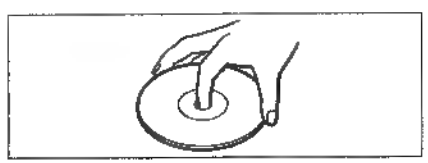

- Do not attach paper notes or stickers to the disc surface.
- Be careful not to drop the disc. Protect it from severe shocks.
- Always store the disc in its case to protect the valuable data it contains.
- Do not store the disc in places which are damp, dusty, exposed to direct sunlight, or near heaters.
- Never place the CD-ROM disc on the dashboard or tray of a car.

Cleaning CD-ROM discs

Dust and fingerprints on the disc surface can result in read errors. Clean the disc by wiping lightly from the center out with a soft, dry cloth.
To remove severe stains, soak a cloth in a neutral solvent, wring the cloth well to remove excess solvent, and wipe the disc lightly. After cleaning, wipe the disc dry with a soft, dry cloth.
Do not clean with benzene, record cleaner or anti-static spray. Doing so may damage the disc.

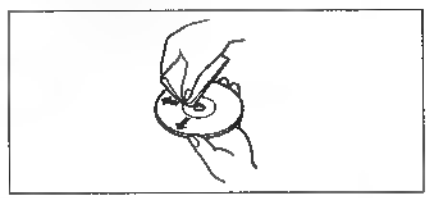

Usable CD-ROM discs

When playing compact discs in this unit's built-in CD-ROM drive, use discs with the follow mark.

COMPACT disc

Handling Floppy Disks

The EditStation uses floppy disks to store EDL data. Software upgrades may also be provided on floppy disks. Observe the following precautions when handling floppy disks.

Floppy disk handling precautions

Floppy disks are a convenient and easy to handle, but certain precautions are required to protect the data on the disk.

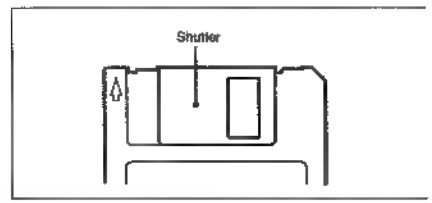

- Do not open the shutter by hand or touch the surface of the disk media. Data errors can result from dirt or scratches on the disk surface.
- Keep floppy disks away from televisions, speakers, and other sources of magnetism. The contents of the disk can be erased by magnets.
- Do not leave floppy disks near heaters or in locations exposed to direct sunlight. Excessive heat can deform the disk and render it unusable.
- Do not leave floppy disks near ashtrays or cups filled with liquid. Data errors can result from dust or liquids that contact the disk surface.
- To protect the data on floppy disks, store them in a case or other safe place.

To protect floppy disk data

Floppy disks have a write inhibit tab to prevent inadvertent erasure of valuable data. You can slide the tab up and down to enable or inhibit recording of data on the floppy disk.

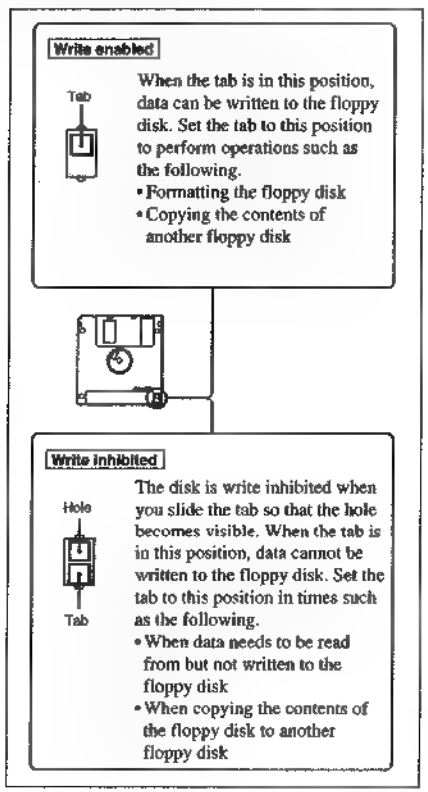

Backing up floppy disk data

When handled properly, floppy disks will not lose their data. Nevertheless, it is wise to make backup copies of disks containing valuable data.

Menu Reference

The following list shows all of the menus in the EditStation editing software. Refer to the online manual for more information about specific menu items.

File menu

Menu item	Function
New	Create a new project file.
Open	Open an existing project file.
Save	Save the currently open project file, overwriting the previous version.
Save As	Save the currently open project in a new file. Specify a new file name, different from the current file name, and save the current project under the new file name.
Close	Close the currently open project file.
(Display Project File Names)	List of the most recently used project files.
Exit	Exit the EditStation editing software.

Edit menu

Menu item	Function
Cut	Delete the currently selected clip and transfer it to the Clipboard.
Copy	Copy the currently selected clip to the Clipboard.
Paste	Paste the contents of the Clipboard to the currently selected position.
Delete	Delete the currently selected clip.
Select All	Select all clips.

View menu

Menu item	Function
Picture	Display a clip in picture format.
Text	Display a clip in text format

Clip menu

Menu item	Function
Video Clip Editor	Start the Video Clip Editor.
Color Clip Editor	Start the Color Clip Editor.
Title Clip Editor	Start the Title Clip Editor
GPI Clip Editor	**PGPI:** Start the PGPI Clip Editor. **SPGI:** Start the SPGI Clip Editor.
Search	Search for a clip.
ClipLink	Read clip link information from a DSR-series VCR into the EditStation.
Upload to Disk Recorder	**All:** Copy all clips from the VCR to the disk recorder. **Selected:** Copy the selected clip from the VCR to the disk recorder.

Tools menu

Menu item	Function
Create Master Tape	Record black burst and timecode signals on a blank tape.
Backup	**Backup to VTR:** Save the entire contents of the disk recorder to tape. **Restore to Disk Recorder:** Restore the contents of the disk recorder by copying backup video and audio data from tape.
Open Recycle Box	Open the Recycle Box window.
Clear Recycle Box	Delete all clips in the Recycle Box window.
Text Composer	Start Text Composer.

Settings menu

Menu item	Function
Device	Specify the video signal format and other settings for connected VCRs.
Control Panel	Assign specific functions to knobs and buttons on the control panel.
Options	Specify the extra duration before and after clips, and make settings for clip links and uploading to the disk recorder.

Menu Reference

Window menu

Menu Item	Function
New Clip Bin Windows	Create a new Clip Bin window.
Cascade	Arrange windows so that their title bars are visible.
Tile Horizontally	Arrange windows without overlap so that each window is wider than it is long.
Tile Vertically	Arrange windows without overlap so that each window is longer than it is wide.
Close	Close the active window.
Display Window Names	Display the names of the currently open windows.

Help menu

Menu Item	Function
Contents	Display the contents of the online manual.
Search	Display help topics associated with a key word.
How to Use Help	Display information about using Help.
Technical Support	Display support information.
About EditStation ES-7	Display the EditStation version number.

When the Timeline Window is the Active Window

File menu

Menu Item	Function
New	Create a new project file.
Open	Open an existing project file.
Save	Save the currently open project file, overwriting the previous version.
Save As	Save the currently open project in a new file. Specify a new file name, different from the current file name, and save the current project under the new file name.
Close	Close the currently open project file.
Load EDL	Read an EDL file.
Dump EDL	Save an EDL file.
(Display Project File Names)	List of the most recently used project files.
Exit	Exit the EditStation editing software.

Edit menu

Menu Item	Function
Undo	Undo the immediately preceding operation on a clip.
Redo	Redo the last undone operation.
Cut	Delete what is currently selected and transfer it to the Clipboard.
Copy	Copy what is currently selected to the Clipboard.
Paste	Paste the contents of the Clipboard to the currently selected position.
Delete	Dlete what is currently selected.
Select All	Select all that can be treated in an editing operation.
Toggle Marker	Set a marker on the timeline, or clear a marker that has been set on the timeline.
Next Marker	Go to the next marker on the timeline.
Previous Marker	Go to the previous marker on the timeline.
Clear All Markers	Clear all markers on the timeline.
Insert Clips	Insert the currently selected clip in the timeline.
Jump to Clip Edge	Jump to the edge of the currently selected edit.
Trim Editor	Trim the currently selected edit.

View menu

Menu Item	Function
Storyboard	Display a clip as an 80 × 60 pixel picture on the storyboard.
Clip on Track	Display a clip on a timeline track in picture format.
Text on Track	Display a clip on a timeline track in text format.
Track Map	Select the timeline tracks to display.
Magnification	Set the zoom ratio for the timeline.

Execute menu

Menu Item	Function
ALL-STOP	Stop all VCRs.
Preview	Conduct a preview before recording.
Rec	Record the edit results on tape.
Review	Review the edit results recorded on tape.
Timeline Play	**Play +:** Play back the edit on the timeline in normal direction. **Pause:** Perform a still playback of the edit on the timeline. **Play –:** Play back the edit on the timeline in reverse direction.
Set Timeline Cursor	Move the cursor on the timeline.
Set Start Time	Set the start point of the timeline.
Edit Mode	Select Assemble or Insert mode.
Protect Edit	Protect sections that have been edited so that they cannot be changed.

Effect menu

Menu Item	Function
Select	Select a wipe, dissolve, or other effect.
Select More	Make settings for the selected effect.
User Effect	Register a user-created effect.
Audio Mixer	Make audio mixer settings.

Tools menu

Menu Item	Function
Create Master Tape	Record black burst and timecode signals on a blank tape.
Download to VTR	Download final edit results to the recorder VCR.
Backup	**Backup to VTR:** Save the entire contents of the disk recorder to tape. **Restore to Disk Recorder:** Restore the contents of the disk recorder by copying backup video and audio data from tape.
Text Composer	Start Text Composer.
ReClip	Create a new clip from part of consecutive edits on a timeline.

Settings menu

Menu Item	Function
Device	Specify the video signal format and other settings for connected VCRs.
Control Panel	Assign specific functions to knobs and buttons on the control panel.
Options	Make settings for preview and other functions.

Window menu

Menu Item	Function
New Timeline Windows	Create a new Timeline window.
Cascade	Arrange windows so that their title bars are visible.
Tile Horizontally	Arrange windows without overlap so that each window is wider than it is long.
Tile Vertically	Arrange windows without overlap so that each window is longer than it is wide.
Close	Close the window.
Display Window Names	Display the names of the currently open windows.

Help menu

Menu Item	Function
Contents	Display the contents of the online manual.
Search for Help on	Display help topics associated with a key word.
How to Use Help	Display information about using Help.
Technical Support	Display support information.
About EditStation ES-7	Display the EditStation version number.

Specifications

General

Signal format NTSC (model for U.S.A. and Canada)
PAL (model for other countries)
Power requirements
In U.S.A. and Canada
120 V AC, 50/60 Hz
In Other countries
220/240 V AC, 50/60 Hz
Power consumption
450 W
Operating temperature
5°C to 35°C (41°F to 95°F)
Dimensions (w/h/d)
424 × 443 × 450 mm (16 ¾ × 17 ½ × 17 ¾ inches)
Mass 40 kg (88 lb 2 oz)

Video signal processing

Sampling method Y:B–Y:R–Y = 4:2:2, 13.5 MHz, 8 bits
Compression method
DV compression

Audio signal processing

Sampling 48 kHz, 16 bits, linear
Channels 4

Input connectors

Analog video input

PLAYER 1 INPUT, PLAYER 2 INPUT
Y/COMP BNC type, 75Ω, 1.0 Vp-p
B–Y, R–Y BNC type, 75Ω
B–Y: 0.7 Vp-p (NTSC) or 0.525 Vp-p (PAL), 100/7.5/77/7.5 (NTSC) or 100/0/75/0 (PAL) color bar
R–Y: 0.7 Vp-p (NTSC) or 0.525 Vp-p (PAL), 100/7.5/77/7.5 (NTSC) or 100/0/75/0 (PAL) color bar
S-VIDEO Mini DIN 4-pin, 75Ω
Y: 1.0 Vp-p
C: 0.286 Vp-p (NTSC) or 0.3 Vp-p (PAL)

RECORDER INPUT
Y/COMP BNC type, 75Ω, 1.0 Vp-p
B–Y, R–Y BNC type, 75Ω
B–Y: 0.7 Vp-p (NTSC) or 0.525 Vp-p (PAL), 100/7.5/77/7.5 (NTSC) or 100/0/75/0 (PAL) color bar
R–Y: 0.7 Vp-p (NTSC) or 0.525 Vp-p (PAL), 100/7.5/77/7.5 (NTSC) or 100/0/75/0 (PAL) color bar
S-VIDEO Mini DIN 4-pin, 75Ω
Y: 1.0 Vp-p
C: 0.286 Vp-p (NTSC) or 0.3 Vp-p (PAL)

AUX IN
Y/G BNC type, 75Ω
Y: 1.0 Vp-p
G: 0.7 Vp-p
B–Y/B BNC type, 75Ω
B–Y: 0.7 Vp-p (NTSC) or 0.525 Vp-p (PAL), 100/7.5/77/7.5 (NTSC) or 100/0/75/0 (PAL) color bar
B: 0.7 Vp-p
R–Y/R BNC type, 75Ω
R–Y: 0.7 Vp-p (NTSC) or 0.525 Vp-p (PAL), 100/7.5/77/7.5 (NTSC) or 100/0/75/0 (PAL) color bar
R: 0.7 Vp-p
SYNC BNC type, 75Ω, 0.286 to 4.0 Vp-p (NTSC) or 0.3 to 4.0 Vp-p (PAL)
GEN LOCK IN BNC type, 75Ω, 1.0 Vp-p

Analog audio input

PLAYER 1 INPUT, PLAYER 2 INPUT, RECORDER INPUT XLR 3-pin × 4, +4 dBm
AUX INPUT XLR 3-pin × 2, +4 dBm

Digital input

SDI INPUT P1, SDI INPUT P2, SDI INPUT AUX, SDI INPUT R, QSDI INPUT P1, QSDI INPUT P2/R (option) BNC type, 75Ω, 0.8 Vp-p, bitrate 270 Mbps, with SDI audio
AES/EBU IN AUX
XLR 3-pin
IEC-958 Phono jack

Output connectors

Analog video output

PROGRAM OUTPUT, MONITOR OUTPUT
Y/G BNC type, 75Ω
Y: 1.0 Vp-p
G (with sync): 1.0 Vp-p
G (without sync): 0.7 Vp-p
B–Y/B BNC type, 75Ω
B–Y: 0.7 Vp-p (NTSC) or 0.525 Vp-p (PAL), 100/7.5/77/7.5 (NTSC) or 100/0/75/0 (PAL) color bar
B: 0.7 Vp-p
R–Y/R BNC type, 75Ω
R–Y: 0.7 Vp-p (NTSC) or 0.525 Vp-p (PAL), 100/7.5/77/7.5 (NTSC) or 100/0/75/0 (PAL) color bar
R: 0.7 Vp-p
S VIDEO Mini DIN 4-pin, 75Ω
Y: 1.0 Vp-p
C: 0.286 Vp-p (NTSC) or 0.3 Vp-p (PAL)
SYNC BNC type, 75Ω, 0.286 to 4.0 Vp-p (NTSC) or 0.3 to 4.0 Vp-p (PAL)
B B OUT Black burst output
BNC type × 4, 75Ω, 0.286 Vp-p

Analog audio output

LINE OUTPUT XLR 3-pin, +4 dBm
MONITOR OUTPUT
Phono jack, –10 dBm

Digital output

SDI OUT R (PGM), QSDI OUT R (option)
BNC type, 75Ω, 0.8 Vp-p, bitrate 270 Mbps, with audio

Computer connection section input and output connectors

PRINTER D-sub 25-pin, Centronics interface
COM 1, COM 2 D-sub 9-pin, RS-232C
KEYBOARD Mini DIN 6-pin
MOUSE Mini DIN 6-pin
DISPLAY MONITOR
D-sub 15-pin
Resolution: 1024 × 768 pixels, 65000 colors
Vertical frequency: 75 Hz

Control connectors

PLAYER 1, PLAYER 2, RECORDER, AUX
D-sub 9-pin, RS-422A
GPI (232) D-sub 9-pin, RS-232C
GPI (PARALLEL) D-sub 9-pin, active low TTL output
LOW: 0 to 0.5 V
HIGH: 3.5 to 5 V
CONTROL PANEL
D-sub 15-pin

Laser Diode Properties

Material Ga Al As
Wave length 780 nm
Emission duration Continuous
Laser output power
0.6 mW (max)
Beam divergence 53.4° ±1.5°

Supplied accessories

Power cord (1)
Mouse (1)
Keyboard (1)
Extension cables for keyboard and mouse, 4 m (2)
Parallel GPI D-sub 15-pin connector (1)
Software and online manual (CD-ROM disc) (1)
Windows NT package (CD-ROM disc and manuals) (1)
Operating Instructions (1)
Software License Agreement (1)
User registration card (1)

1-55

Specifications

Optional accessories

9-pin remote control cables RCC-5G/10G/30G (5 m/10 m/30 m)
ESBK-7091E EditStation Operation Manual (Printed version of online manual contained in CD-ROM disc)

Design and specifications are subject to change without notice.

Glossary

This appendix explains some important terms in video editing, including terms that are used in a special sense in this manual.

A/B roll editing
Editing in which special effects such as wipe and dissolve are applied to the playback of two playback VCRs and recorded on a master tape by a recorder VCR.

Dissolve
A type of transition effect in which one scene gradually fades out as another scene fades in. Also called "mix".

Edit
In the EditStation editing software, a rectangle on a time line that represents a specific video clip in the ClipBin window. In conventional editing systems, the smallest unit of editing data, composed of a reel name, IN point, OUT point, effect type and so on.

Edit block
A block of one or more edits, represented as a single rectangle on the Edit track of the Timeline window. When you specify an effect that involves a transition between neighboring edits, the edits are joined in a single edit block.

EDL
Abbreviation of Edit Decision List. A list that records IN points, OUT points, effects and so on in a standard format.

GUI
Abbreviation of Graphical User Interface. A type of user interface that uses pictures and easily understood graphical elements to represent commands and program states.

Linear editing
Editing while playing back video and audio signals recorded on video tape.

Non-linear editing
Editing while playing back video and audio signals recorded on hard disks. Video scenes stored on disk can be cued up quickly, for increased editing efficiency.

Video clip
In the EditStation editing software, the smallest unit of editing data, composed of a reel name, IN point, OUT point and so on. Video clips that have been dragged to a timeline are referred to as edits.

Wipe
A type of transition effect in which old video is wiped off the screen by new video, usually in the order defined by a geometric pattern.

Index

A

Active window 32
Advanced DME Switcher Board, ESBK-7023 14
AES/EBU IN AUX connector 101
ALL STOP button 41
Analog hybrid editing system 9
Analog linear editing system 12
  with external switcher 13
AUX connector 100
AUX INPUT connector 104, 106

B

B B OUT (black burst output) connectors 99
Basic DME Switcher Board, ESBK-7021 14

C

CD-ROM 68
Clicking 20
Clip Bin window 32
Clip menu 111
Color clip 48
COM 1 connector 99
  pin assignments 94
COM 2 connector 99
  pin assignments 94
Connectable video and audio equipment ..... ■
Connecting system components 69
  analog VCRs 69
  audio equipment 74
  computer peripherals 73
  digital Betacam VCRs 70
  Disk Units 72
  DSR-series digi■ VCRs 71
  external DME switcher 75
  video/audio monitors 74
Contents of the package 8
CONTORL PANEL connector 100
Control panel 14, 35
Cut transitions ..... ■

D

Date and time, setting 89
DFS connector 105
Digital hybrid editing system 10
Digital non-linear editing system 11
Disk recorder 7
  connecting 72
  copying video clips 38
  uploading video clips 38
Disk Recorder Board, ESBK-7041 14
Disk Unit, ESBK-7045 14
DISPLAY MONITOR connector 99
  pin assignments 95
Dissolve 48, 50
Double clicking 20
Dragging 21
DSK track 56

E

Edit block 47
Edit file, saving 59
Edit menu 111, 112
Edit point
  adjusting 42
  specifying 35
Effect 45
Effect menu 113
Entering text and numbers 22
Error messages 107
ESDraw, ESBK-7071 15
ETHERNET connector 99
Ethernet Option, ESBK-7052 15
Execute menu 112
Exiting EditStation 63
External switcher 13
  connecting 75
External Switcher Interface Board, ESBK-7025 ..... 13, 14

F

Fade in 48
Fade out 48
File menu 111, 112
File, saving 59
Floppy disk 66

G

GEN LOCK IN connector 105
GPI (232) connector 100
  pin assignments 94
GPI (PARALLEL) connector 100
  pin assignments 94

H

Help file 60
Help menu 112, 113

I

IEC958 IN AUX connector 101
IN point
  adjusting 42
  specifying 35
Initial screen 32
Installing optional boards 77
  installing daughter boards 80
  installing in ISA slots 86
  installing on the motherboard 78

J

Jog mode 35

K

Keyboard 22
KEYBOARD connector 99

L

LINE OUTPUT connector 106
log on 17

M. N

MARK IN 35
MARK OUT 36
Master tape 33
Menu bar 32
menu command, selecting 25
Menu reference 111
MON IN connector 105
MONITOR OUTPUT connector 104
Mouse 20
  clicking 20
  double clicking 20
  dragging 21
MOUSE connector 99

O

Online manual 60
Options 14
OUT point
  adjusting 42
  specifying 36

P

Pin assignments 94
  COM 1 94
  COM 2 94
  DISPLAY MONITOR 95
  GPI (232) 94
  GPI (PARALLEL) 94
  PRINTER 94
PLAYER 1 connector 100
PLAYER 1 INPUT connector 103, 106
PLAYER 2 connector 100
PLAYER 2 INPUT connector 103, 106
Preview button 41, 57
Previewing 40, 57
PRINTER connector 99
  pin assignments 94
PROGRAM OUTPUT connector 104

Q

QSDI INPUT P1 connector 102
QSDI INPUT R/P2 connector 102
QSDI Interface Board, ESBK-7031 14
QSDI OUT R connector 102

R

RECORDER connector 100
RECORDER INPUT connector 104, 106
Recording 58
Reel name dialog box 36
Registering passwords 91
Registering user name 91
Rehearsal 40, 57
Reinstalling the software 90
Reviewing 58

S

Saving edit file 59
SCSI 1 to 4 connectors 101
SCSI connector 100
SCSI Option, ESBK-7051 15
SDI INPUT AUX connector 102
SDI INPUT P1 connector 101
SDI INPUT P2 connector 102
SDI INPUT R connector 102
SDI Interface Board, ESBK-7032 15
SDI OUT R (PGM) connector 102
Search dial 35
Selecting a menu command 25
Self diagnostics 93
Settings menu 111, 113
75 Ω ON/OFF switch 105
Shutting down the system 26
Shuttle mode 35
Slot positions 77
Specifications 114
Starting
  EditStation 30
  system 17
Storyboard 32
System
  arranging components 65
  shutting down 26
  starting 17
System configuration 9
  analog hybrid editing system 9
  analog linear editing system 12
  analog linear editing system with external switcher 13
  digital hybrid editing system 10
  digital non-linear editing system 11

T. U

Text composer 52
3D Effect Board for Advanced DME Switcher, ESBK-7024 14
3D Effect Board for Basic DME Switcher, ESBK-7022 14
Timecode ruler 40
Timeline 32
Timeline cursor 40
Timeline window 32
Title
  creating 52
  inserting into the video 55
Title clip 55
Toolbar 32
Tools menu 111, 113

V

Video clip 34
  copying to the disk recorder 38
  creating 34
  uploading ..... ■
Video clip editor 34
Video signal format 88
View menu 111, 112

W to Z

Window menu 112, 113
Windows
  changing the size 24
  moving 24
  selecting menu commands 25
  using 24
Wipe 45

SECTION 2
SERVICE INFORMATION

2-1. INSTALLATION

2-1-1. Installation

Power requirements:
In U.S.A. and Canada 120 V AC, 50/60 Hz
In Other countries 220/240 V AC, 50/60 Hz
Power cousumption : 450W
Operationg temperature : 5 °C to 35 °C (41 °F to 95 °F)
Dimention(w/h/d) : 424 × 443 × 450 mm
($16^3/_4 \times 17^1/_2 \times 17^3/_4$ inches)
Mass : 40kg(881b 2 oz)
Operating and storage conditions:
Avoid using or storing the unit in places which are:

- very hor or cold
- damp or dusty
- subject hot severe vibrations
- near equipment generating strong electromagnetic currents
- near television or radio tarnsmitting stations or soures of strong radio waves
- subject to severe interference

2-1-2. RACK-MOUNTING

This unit can be mounted on an EIA Standard 19-inch rack. When mounting, be sure to use a support angle or silede rail.

Recommended slide rail
RMM-ES7(SONY RACK MOUNT RAIL)
The unit can be mounted easily on the 19-inch standad rack by using one RMM-ES7(SONY RACK MOUNT RAIL) for one unit.

- Component parts
  Rail with bracket × 2
  Screw(+PWH 10) × 2
  Plate nut M4 × 2
  Screw(+B 8) × 8

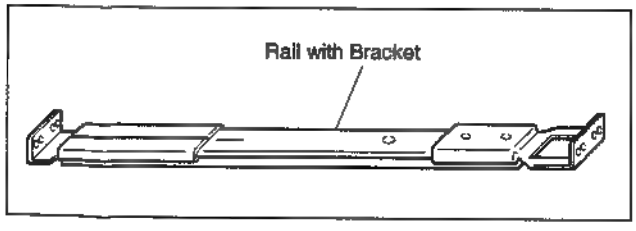

- Usable rack
  One with ■ depth of 660 to 830 mm

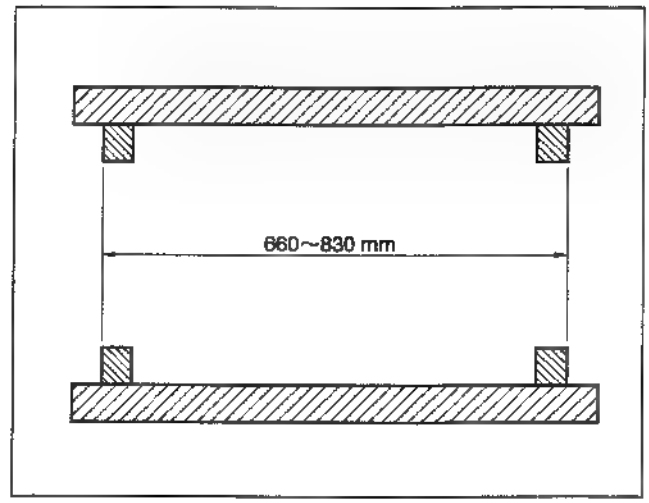

- How to install

① Remove four feet from the bottom of the unit.

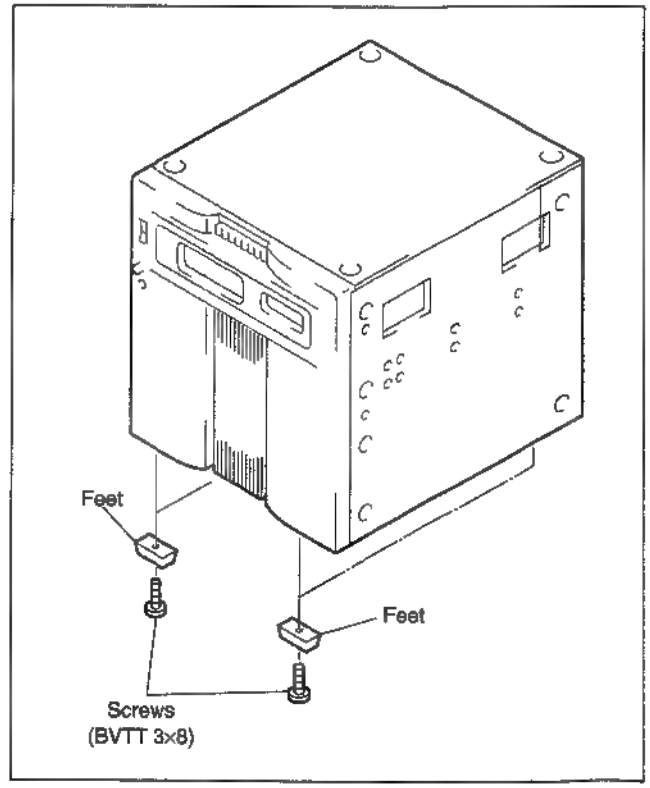

② Install the rack mounting rail. For details, refer to INSTALLATION MANUAL packed with the rack mounting rail RMM-ES7.

• Maximum movable length of the ES-7 is as follows.

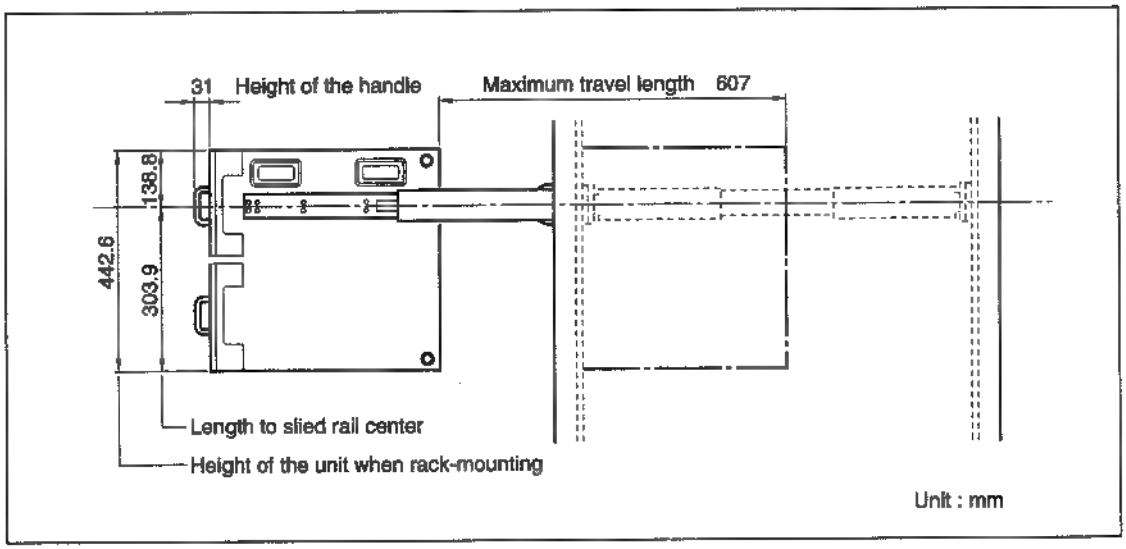

In Cases When Other Than RMM-ES7 is Used:

In cases when a support angle or a slide rail that is sold by rack maker is used, check the external dimensions of the unit and the slide rail mounting holes and mount it according to the instruction manual of each rack maker.

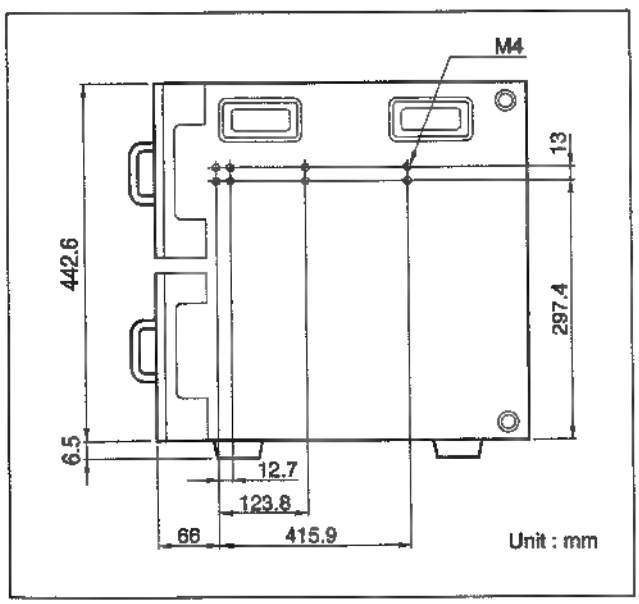

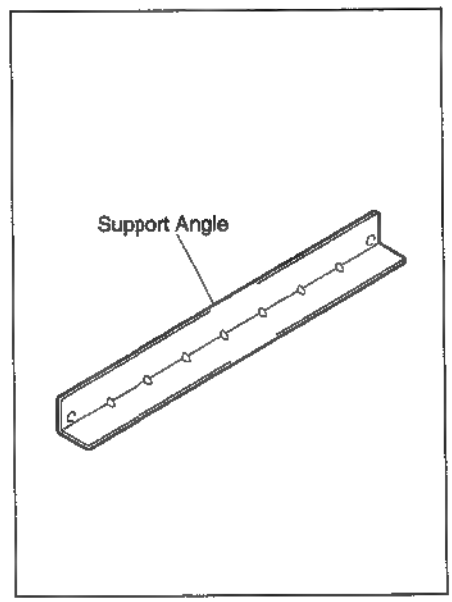

2-2. CONNECTING SYSTEM COMPONENTS

This section provides examples that show how to connect the components in your editing system.

2-2-1. Connecting VCRs

The VCR connection examples in this section assume that an ESBK-7045 Disk Unit has been connected to the EditStation.

For more information about connecting ■ disk unit, see page 2-6.

Connecting analog VCRs

You can do the following with ■ system configured as shown below.

- Do linear editing using materials stored on tape and VCR playback.
- Copy clips from tape to the disk recorder.
- Do non-linear editing using materials stored on the disk recorder.
- Record the results of the edit on tape as analog component video signals.

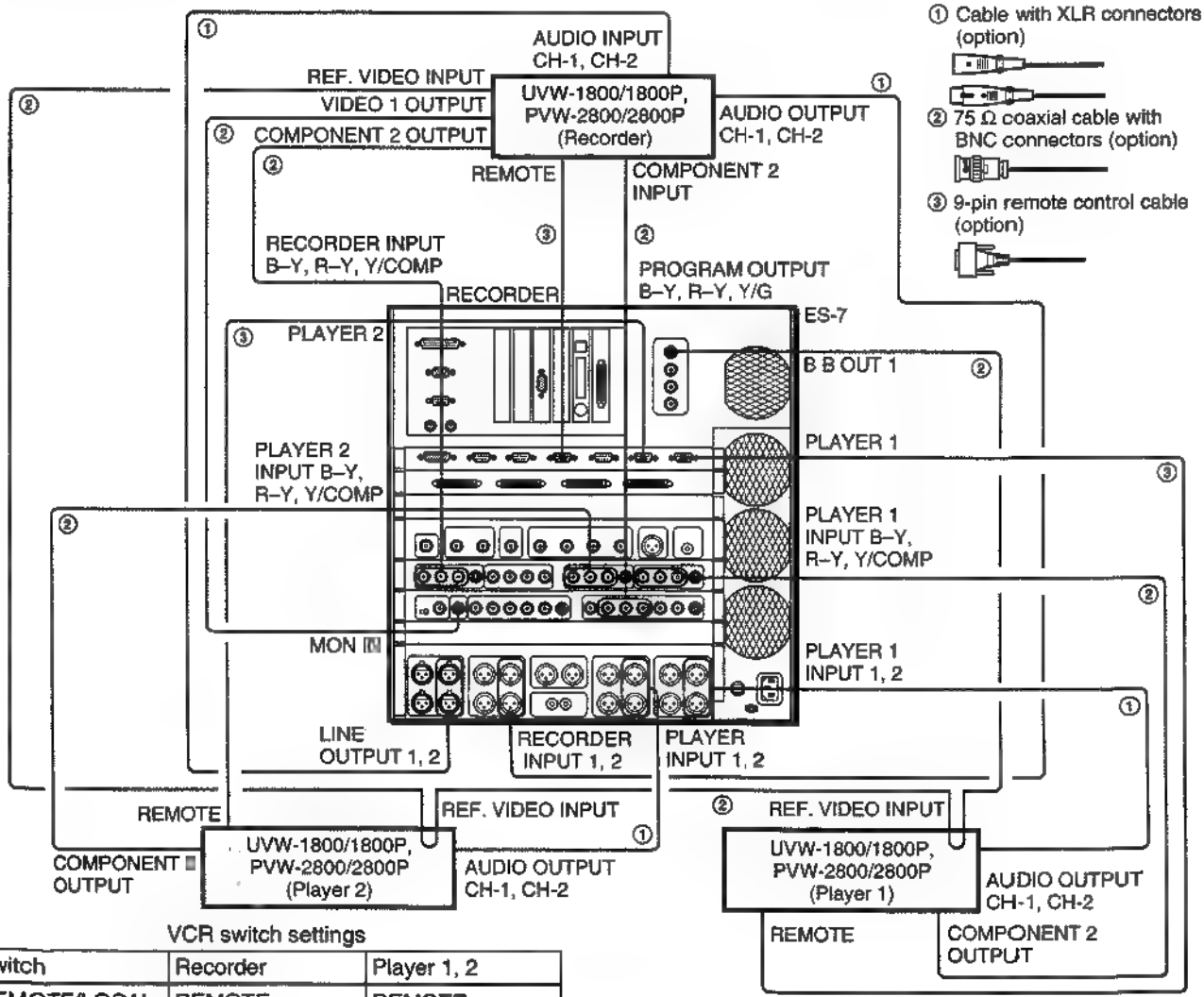

VCR switch settings

Switch	Recorder	Player 1, 2
REMOTE/LOCAL	REMOTE	REMOTE
VIDEO IN	Y–R, B	—
REF. VIDEO 75 ■	ON	OFF

See the digital Betacam VCR connection example (page 2-4) for connecting a control panel.

Connecting digital Betacam VCRs

You can do the following with a system configured as shown below.

- Do linear editing using materials stored on tape and VCR playback.
- Copy clips from tape to the disk recorder.
- Do non-linear editing using materials stored on the disk recorder.
- Record the results of the edit on tape as digital Betacam video signals.

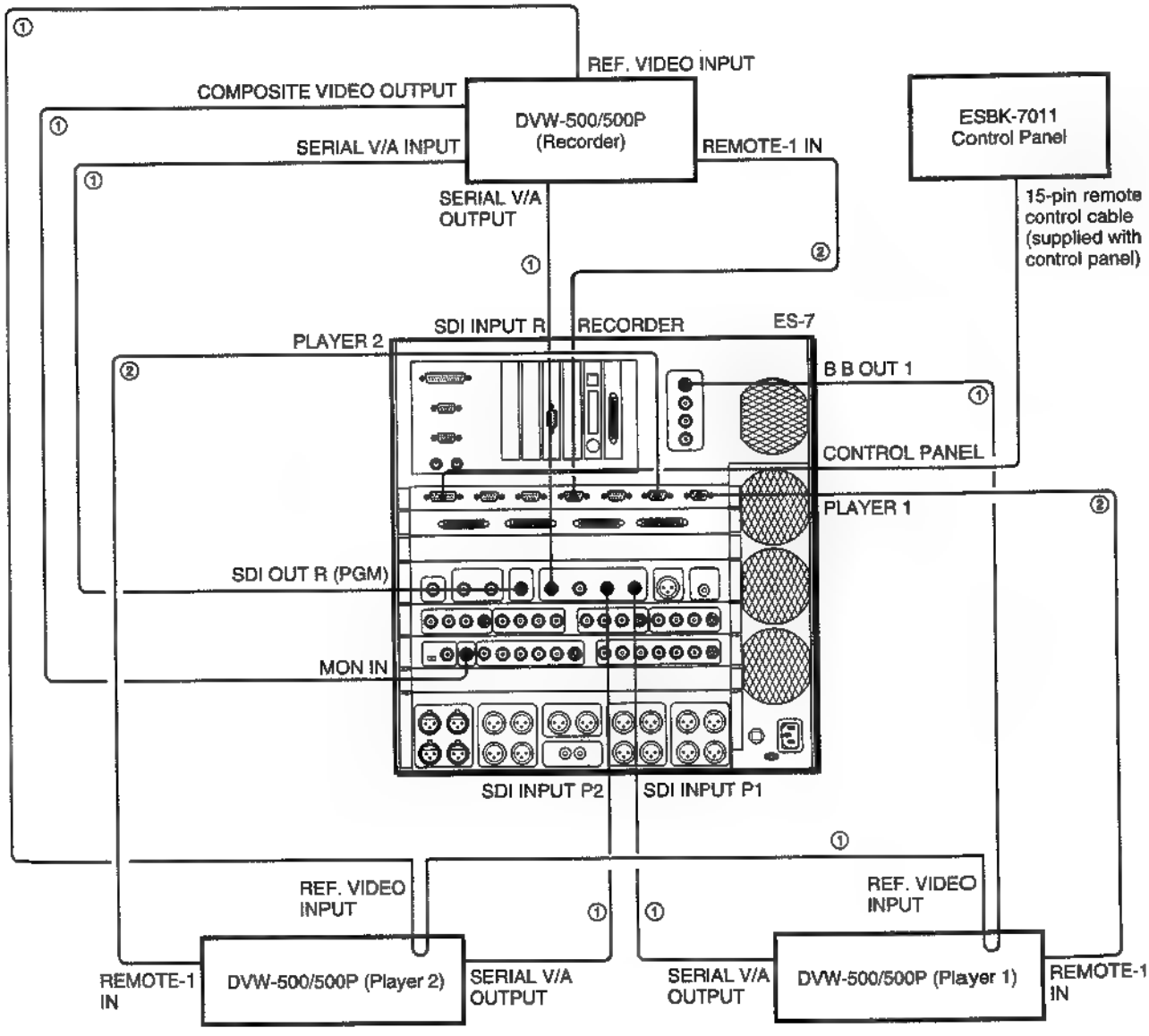

VCR switch settings

Switch	Recorder	Player 1, 2
REMOTE/LOCAL	1 (9P)	1 (9P)
VIDEO INPUT SELECT	SIF	—
REF. VIDEO INPUT 75 Ω	ON	OFF

① 75 Ω coaxial cable with BNC connectors (option)

② 9-pin remote control cable (option)

Connecting DSR-series digital VCRs

You can do the following with a system configured as shown below.

- Do linear editing using VCR playback of materials stored on tape.
- Copy clips from tape to the disk recorder at 4 times normal speed.
- Do non-linear editing using materials stored on the disk recorder.
- Record the results of the edit on tape as serial digital video signals at 4 times normal speed.

In this example, both SDI and QSDI signals are connected. The roles of the signals are as follows.

SDI signals: Used in linear editing and hybrid editing.

QSDI signals: Used in non-linear editing and for uploads and downloads at 4 times normal speed.

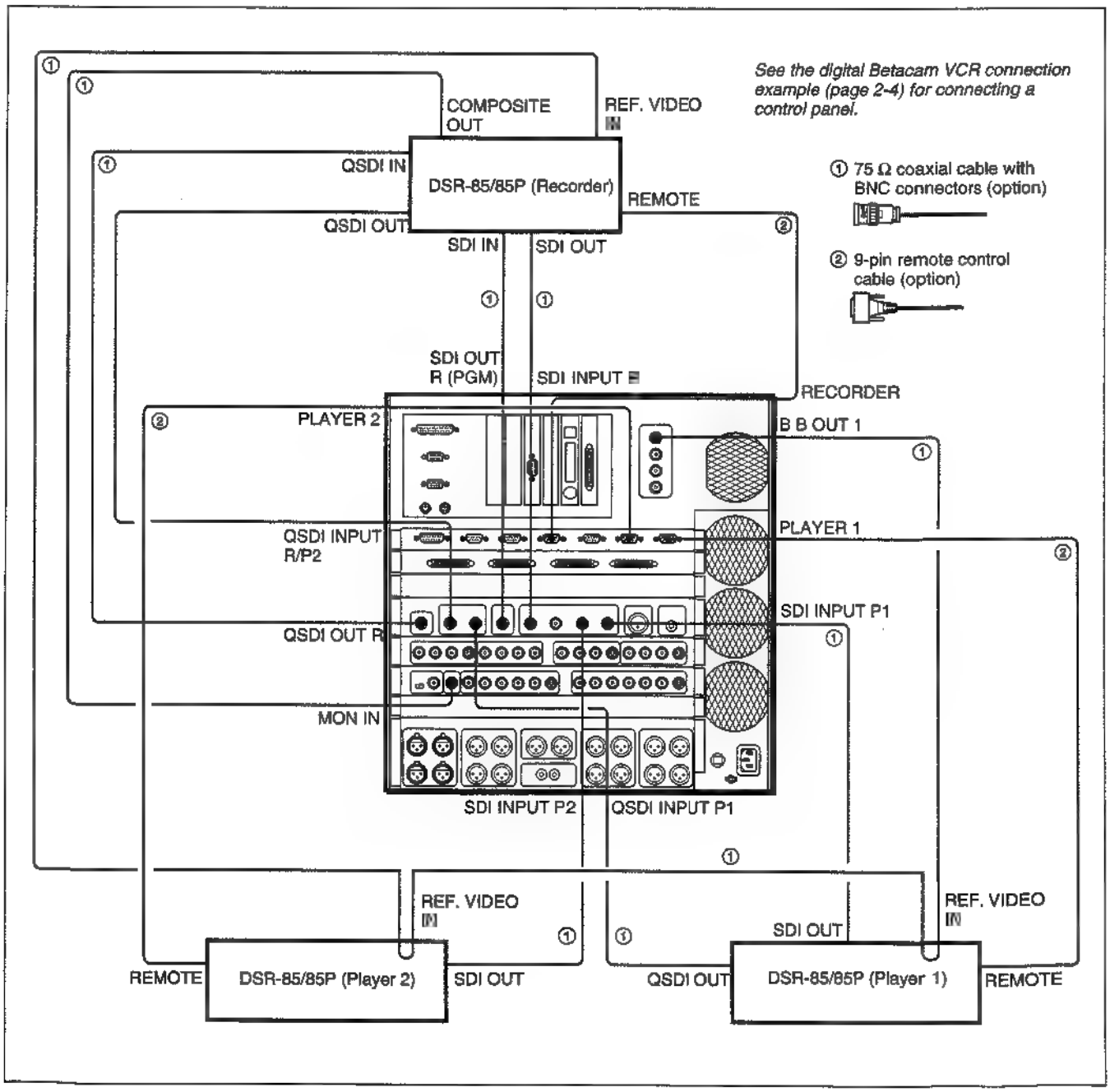

2-2-2. Connecting ESBK-7045 Disk Units

You can do the following with a system configured as shown below.

- Do non-linear editing using materials stored on the disk recorder.
- Record up to 4 hours of video on the disk recorder in high-quality mode.

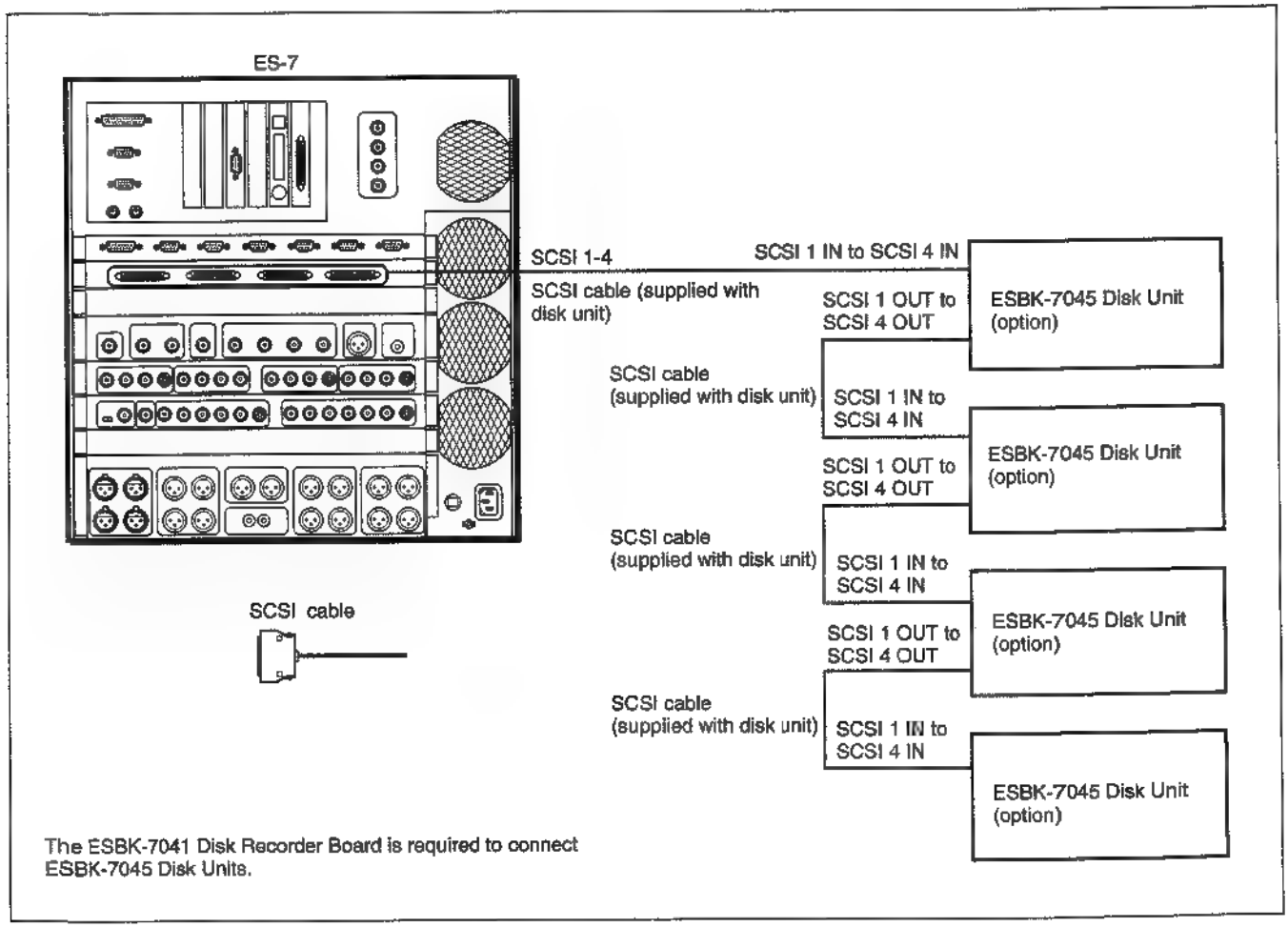

The ESBK-7041 Disk Recorder Board is required to connect ESBK-7045 Disk Units.

2-2-3. Connecting Computer Peripherals

You can do the following with a system configured as shown below.

- Use a tablet to create graphics.
- Send and receive video and editing data over a network.
- Store editing data on MO disks.
- Print editing data.

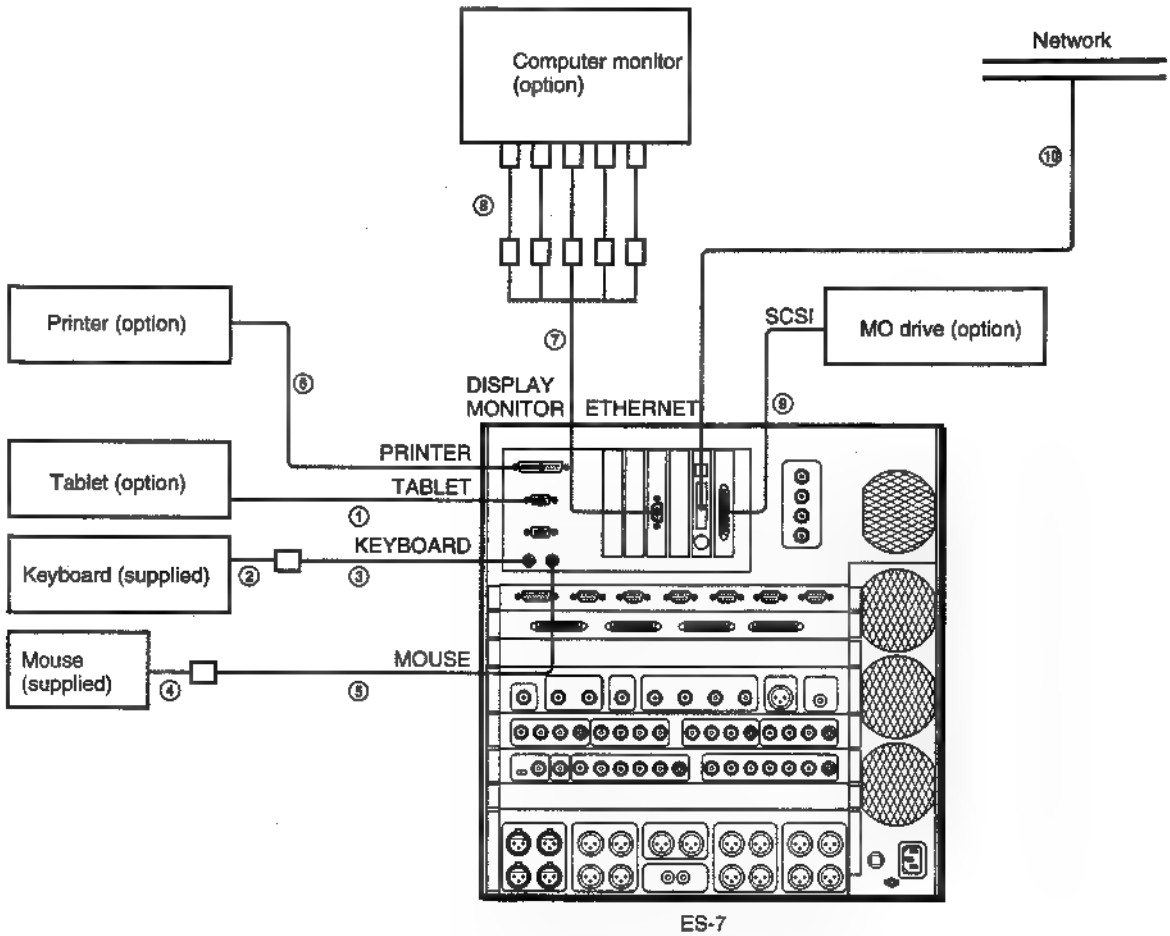

① Tablet cable (supplied with tablet)

② Keyboard cable (1 m, supplied)

③ Keyboard extension cable (4 m, supplied)

④ Mouse cable (1 m, supplied)

⑤ Mouse extension cable (4 m, supplied)

⑥ Printer cable (option)

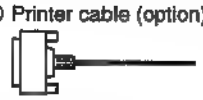

⑦ Display monitor multi-cable (D-sub 15-pin on one end, BNC connector × 5 on other end, option)

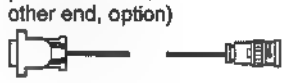

⑧ BNC extension cable × 5 (Option. Use 5 cables of same length.)

⑨ SCSI cable (option)

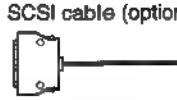

⑩ Ethernet connection cable (Option. Refer to the ESBK-7052 Ethernet Option operation manual for details.)

2-2-4. Connecting Video/Audio Monitors and Audio Equipment

You can do the following with a system configured as shown below.

- Record digital audio signals from CDs or DATs to videotape.
- Monitor audio signals.
- Monitor video signals before recording.
- Monitor signals input to the recorder.

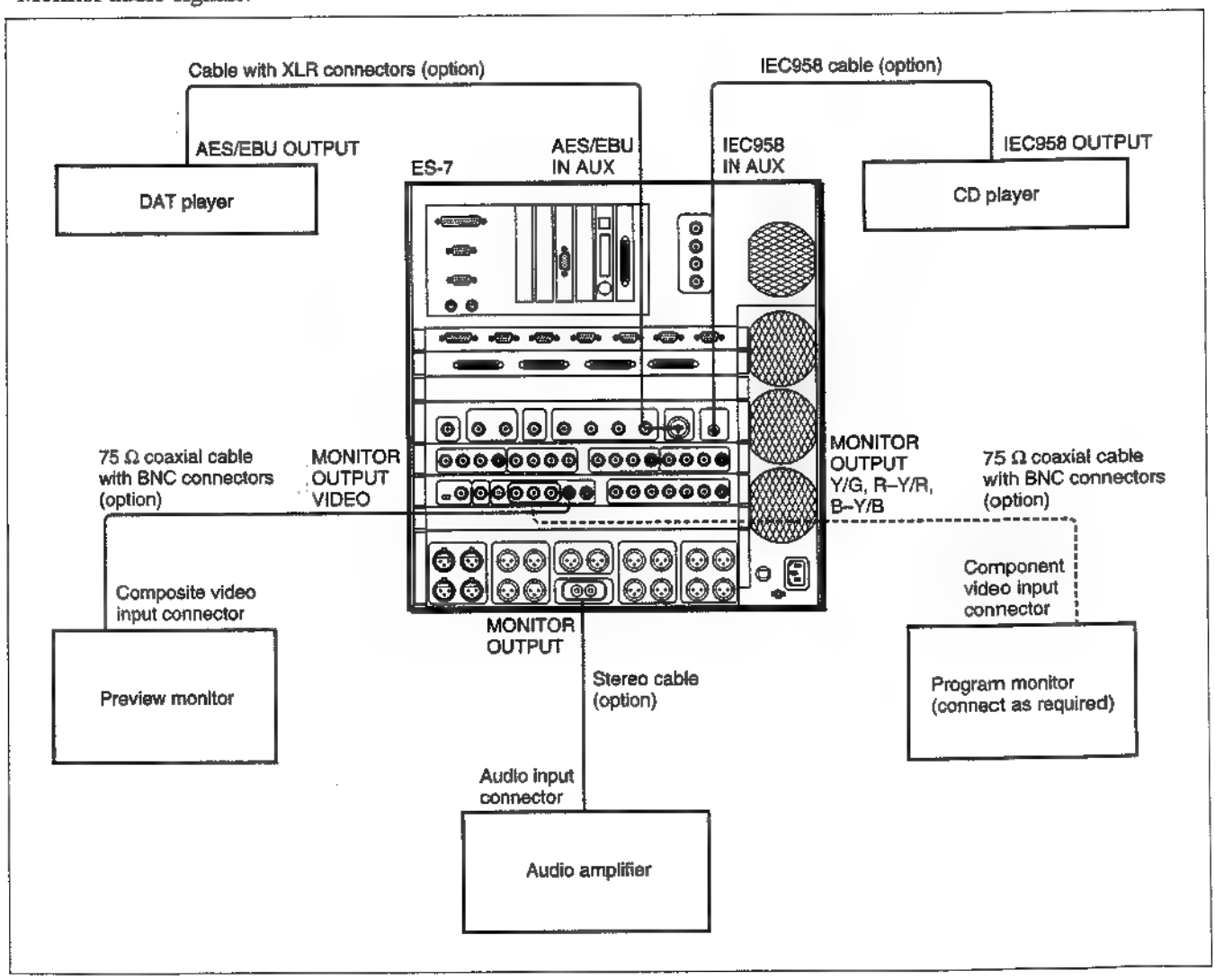

2-2-5. Connecting an External DME Switcher

You can do the following with a system configured as shown below.

- Do linear editing using materials stored on tape and VCR playback.
- Use the DFS-300/300P/500/500P to apply effects and switch between scenes.
- Record the edit results as analog component video signals.

Setting the editor selection switch on the DME switcher

When connecting a DFS-300/300P/500/500P DME switcher, set the editor selection switch on the DME switcher as follows.

DFS-300/300P: PVE-500
DFS-500/500P: BVE-900

Types of editing that can be done

The only kind of editing that can be done with a system configured as shown below is linear editing of analog video signals. Non-linear editing and editing of digital signals are not possible.

Signal connections, settings, and limitations

- When you connect an external DME switcher, the outputs of the MONITOR OUTPUT and PROGRAM OUTPUT connectors of the ES-7 are as follows.
  MONITOR OUTPUT connector: The output is always the component key fill signal of the internal titler of the ES-7. Connect to the DSK VIDEO IN connector or the INPUT-4 connector of the DFS-300/300P/500/500P.
  PROGRAM OUTPUT connector: The output is always the key source signal of the internal titler of the ES-7.
- When inputting the key fill signal to both the DSK VIDEO IN and INPUT-4 connectors, an external signal distributor is required.
- When you connect an external DME switcher, connect the output of the PGM OUT connectors of the DFS-300/300P/500/500P to the AUX INPUT connectors of the ES-7.
- The correspondence between VCRs and the INPUT 1 to 4 connectors of the DFS-300/300P/500/500P is as follows.
  INPUT-1: PLAYER-1
  INPUT-2: PLAYER-2
  INPUT-3: AUX
  (INPUT-4: Titler key fill)
  Set the input signal formats with the input signal format selection switches on the AD board of the DFS-300/300P/500/500P. You cannot set the format from the ES-7 editing software.
- Connect the video monitor that you will use for previews to the VIDEO OUT connector of the recorder VCR.
- In the EditStation editing software, make the Timeline window the active window, select Options from the Settings menu, and set Preview Mode to PB/EE.
- When you connect an external DME switcher, you cannot use the function that superimposes status information on the output of the MONITOR OUTPUT VIDEO connector.
- You can operate the DFS-300/300P/500/500P from the control panel supplied with the DFS-300/300P/500/500P. However, these operations will not be reflected in the screens of the EditStation editing software.

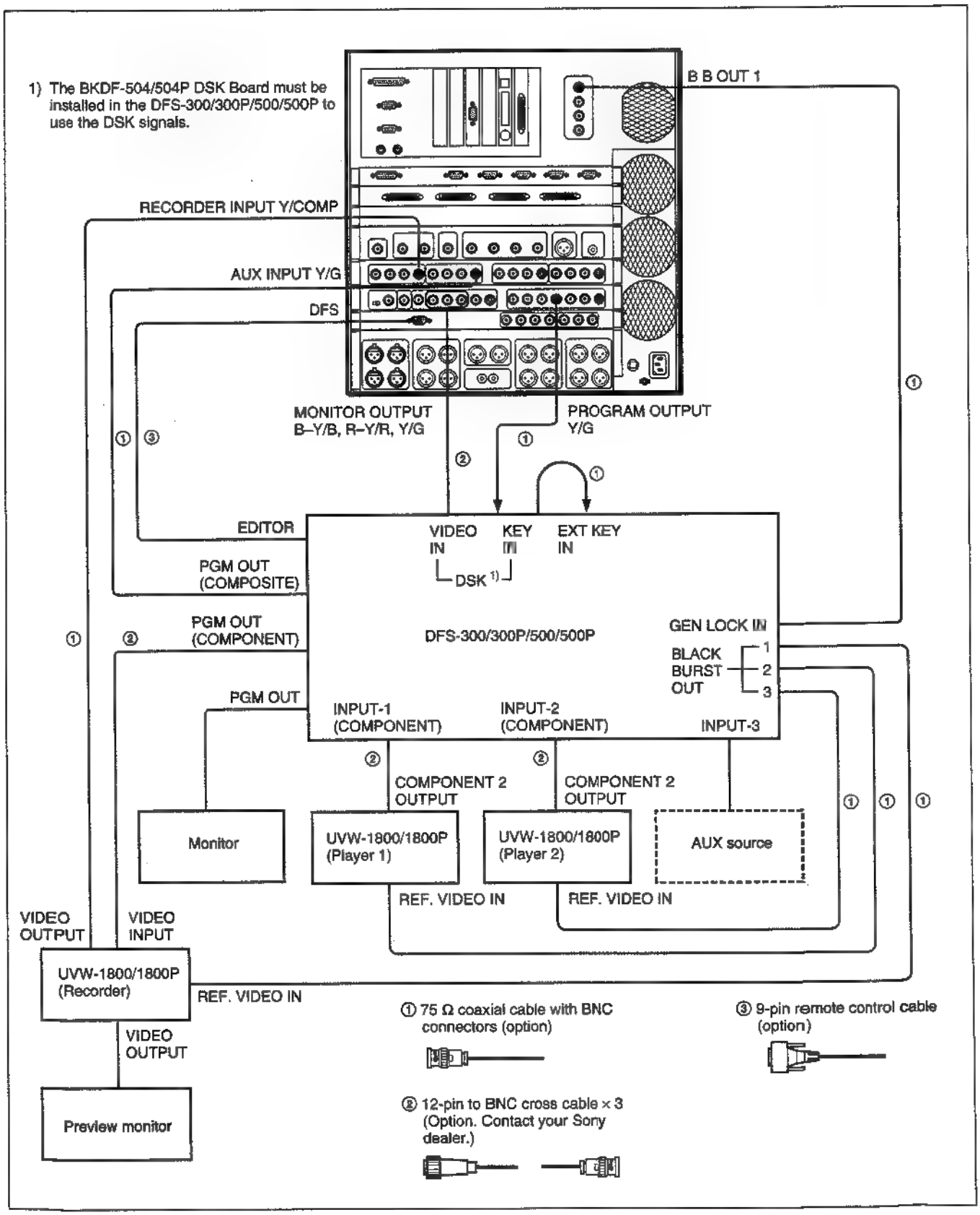
1) The BKDF-504/504P DSK Board must be installed in the DFS-300/300P/500/500P to use the DSK signals.
B B OUT 1
RECORDER INPUT Y/COMP
AUX INPUT Y/G
DFS
MONITOR OUTPUT
B–Y/B, R–Y/R, Y/G
PROGRAM OUTPUT
Y/G
EDITOR
VIDEO IN
KEY IN
EXT KEY IN
DSK 1)
PGM OUT (COMPOSITE)
PGM OUT (COMPONENT)
DFS-300/300P/500/500P
GEN LOCK IN
BLACK BURST OUT
1
2
3
PGM OUT
INPUT-1 (COMPONENT)
INPUT-2 (COMPONENT)
INPUT-3
COMPONENT 2 OUTPUT
COMPONENT 2 OUTPUT
Monitor
UVW-1800/1800P (Player 1)
UVW-1800/1800P (Player 2)
AUX source
REF. VIDEO IN
REF. VIDEO IN
VIDEO OUTPUT
VIDEO INPUT
UVW-1800/1800P (Recorder)
REF. VIDEO IN
VIDEO OUTPUT
Preview monitor
① 75 Ω coaxial cable with BNC connectors (option)
② 12-pin to BNC cross cable × 3 (Option. Contact your Sony dealer.)
③ 9-pin remote control cable (option)

2-3. Connector

2-3-1. Connectors

Display Panel	Connectors	Sony Parts No.
BLACK BURST OUTPUT SIGNAL		
B.B OUT1-4	BNC, MALE	1-560-069-11
COMPUTER CONNECTION		
PRINTER	D-SUB 25P, MALE	Standard Product
COM1	D-SUB 9P, FEMALE	Standard Product
COM2	D-SUB 9P, FEMALE	Standard Product
MOUSE	Mini DIN 6P	ES-7 comes with 4 m cable (1-777-294-11)
KEYBOARD	Mini DIN 6P	ES-7 comes with 4 m cable (1-777-294-11)
DISPLAY MONITOR	D-SUB(VGA)15P, MALE	Standard Product
SCSI	50P(HALF), MALE	Standard Product
ETHERNET	50P(HALF), MALE	Standard Product
SYSTEM CONTROLLER		
PLAYER1	9P REMOTE CABLE	RCC-5G(5 m), RCC-10G(10 m), RCC-30G(30 m): Optional Accessory
PLAYER2	9P REMOTE CABLE	RCC-5G(5 m), RCC-10G(10 m), RCC-30G(30 m): Optional Accessory
AUX	9P REMOTE CABLE	RCC-5G(5 m), RCC-10G(10 m), RCC-30G(30 m): Optional Accessory
RECORDER	9P REMOTE CABLE	RCC-5G(5 m), RCC-10G(10 m), RCC-30G(30 m): Optional Accessory
GPI(232)	D-SUB 9P, FEMALE	1-568-181-11
	SHELL	Use shielded type with fitting screw of inch screw
	CABLE	Use cable with shield
GPI(PARALLEL)	D-SUB 9P, MALE	1-568-182-11
	D-SUB 9P SHELL	1-563-375-11
	CABLE	Use cable with shield
CONTROL PANEL	D-SUB 15P, MALE	Use the attached cable for ESBK-7011 (Fixed up the parts of No. 1-543-798-11 on the female side of No. 1-777-191-11.)
DISC RECORDER CONNECTION		
SCSI 1-4	SCSI CABLE	ESBK-7045 comes with cable (1-777-700-11)
DIGITAL I/O		
IEC958 IN AUX	IEC958	Standard Product
AES/EBU IN AUX	XLR 3P, MALE	1-508-084-00
SDI INPUT P1	BNC, MALE	1-560-069-11
SDI INPUT P2	BNC, MALE	1-560-069-11
SDI INPUT AUX	BNC, MALE	1-560-069-11
SDI INPUT R	BNC, MALE	1-560-069-11
SDI OUT R(PGM)	BNC, MALE	1-560-069-11
QSDI INPUT P1	BNC, MALE	1-560-069-11
QSDI INPUT R/P2	BNC, MALE	1-560-069-11
QSDI OUT R	BNC, MALE	1-560-069-11

Display Panel	Connectors	Sony Parts No.
VIDEO INPUT/OUTPUT SIGNAL		
PLAYER 1 INPUT		
PLAYER 2 INPUT		
RECORDER INPUT		
S-VIDEO	S-VIDEO CABLE	YC-30V (3 m): Optional Accessory
Y/COMP	BNC, MALE	1-560-069-11
R-Y	BNC, MALE	1-560-069-11
B-Y	BNC, MALE	1-560-069-11
AUX INPUT		
Y/G	BNC, MALE	1-560-069-11
R-Y/R	BNC, MALE	1-560-069-11
B-Y/B	BNC, MALE	1-560-069-11
SYNC	BNC, MALE	1-560-069-11
PROGRAM OUTPUT		
S-VIDEO	S-VIDEO CABLE	YC-30V (3 m): Optional Accessory
VIDEO 1,2	BNC, MALE	1-560-069-11
Y/G	BNC, MALE	1-560-069-11
R-Y/R	BNC, MALE	1-560-069-11
B-Y/B	BNC, MALE	1-560-069-11
SYNC	BNC, MALE	1-560-069-11
MONITOR OUTPUT		
S-VIDEO	S-VIDEO CABLE	YC-30V (3 m): Optional Accessory
VIDEO	BNC, MALE	1-560-069-11
Y/G	BNC, MALE	1-560-069-11
R-Y/R	BNC, MALE	1-560-069-11
B-Y/B	BNC, MALE	1-560-069-11
SYNC	BNC, MALE	1-560-069-11
MON IN (R)	BNC, MALE	1-560-069-11
GEN LOCK IN	BNC, MALE	1-560-069-11
DME SWITCHER		
DFS	9P REMOTE CABLE	RCC-5G (5 m), RCC-10G (10 m), RCC-30G (30 m): Optional Accessory
AUDIO INPUT/OUTPUT SIGNAL		
PLAYER 1 INPUT 1-4	XLR 3P, FEMALE	1-508-083-00
PLAYER 2 INPUT 1-4	XLR 3P, FEMALE	1-508-083-00
RECORDER INPUT 1-4	XLR 3P, MALE	1-508-084-00
AUX INPUT 1, 2	XLR 3P, FEMALE	1-508-083-00
LINE OUTPUT 1-4	XLR 3P, MALE	1-508-084-00
MONITOR OUTPUT	PIN PLUG	Standard Product

2-3-2. Connector Input/Output Signal

Input connectors

Analog video input

- PLAYER 1 INPUT, PLAYER 2 INPUT Y/COMP : BNC type, 75Ω, 1.0 Vp-p
  B–Y, R–Y : BNC type, 75Ω
  B–Y : 0.7 Vp-p (NTSC) or 0.525 Vp-p (PAL),
  100/7.5/77/7.5 (NTSC) or 100/0/75/0 (PAL) color bar
  R–Y : 0.7 Vp-p (NTSC) or 0.525 Vp-p (PAL),
  100/7.5/77/7.5 (NTSC) or 100/0/75/0 (PAL) color bar
  S-VIDEO : Mini DIN 4-pin, 75Ω
  Y: 1.0 Vp-p
  C: 0.286 Vp-p (NTSC) or 0.3 Vp-p (PAL)
- RECORDER INPUT Y/COMP : BNC type, 75Ω, 1.0 Vp-p
  B–Y, R–Y : BNC type, 75Ω
  B–Y : 0.7 Vp-p (NTSC) or 0.525 Vp-p (PAL),
  100/7.5/77/7.5 (NTSC) or 100/0/75/0 (PAL) color bar
  R–Y : 0.7 Vp-p (NTSC) or 0.525 Vp-p (PAL),
  100/7.5/77/7.5 (NTSC) or 100/0/75/0 (PAL) color bar
  S-VIDEO : Mini DIN 4-pin, 75Ω
  Y: 1.0 Vp-p
  C: 0.286 Vp-p (NTSC) or 0.3 Vp-p (PAL)
- AUX IN Y/G : BNC type, 75Ω
  Y: 1.0 Vp-p
  G: 0.7 Vp-p
  B–Y/B : BNC type, 75Ω
  B–Y : 0.7 Vp-p (NTSC) or 0.525 Vp-p (PAL),
  100/7.5/77/7.5 (NTSC) or 100/0/75/0 (PAL) color bar
  B : 0.7 Vp-p
  R–Y/R : BNC type, 75Ω
  R–Y : 0.7 Vp-p (NTSC) or 0.525 Vp-p (PAL),
  100/7.5/77/7.5 (NTSC) or 100/0/75/0 (PAL) color bar
  R : 0.7 Vp-p
  SYNC : BNC type, 75Ω, 0.286 to 4.0 Vp-p (NTSC) or
  0.3 to 4.0 Vp-p (PAL)
- GEN LOCK IN : BNC type, 75Ω, 1.0 Vp-p

Analog audio input

- PLAYER 1 INPUT, PLAYER 2 INPUT, RECORDER INPUT : XLR 3-pin × 4, +4 dBu
- AUX INPUT : XLR 3-pin × 2, +4 dBu

Digital input

- SDI INPUT P1, SDI INPUT P2, SDI INPUT AUX, SDI INPUT R, QSDI INPUT P1, QSDI INPUT P2/R (option)
  : BNC type, 75Ω, 0.8 Vp-p, bitrate 270 Mbps, with SDI audio
- AES/EBU IN AUX : XLR 3-pin
- IEC-958 : Phono jack

Output connectors

Analog video output

- PROGRAM OUTPUT, MONITOR OUTPUT

Y/G : BNC type, 75Ω
Y: 1.0 Vp-p
G (with sync): 1.0 Vp-p
G (without sync): 0.7 Vp-p
B–Y/B : BNC type, 75Ω
B–Y: 0.7 Vp-p (NTSC) or 0.525 Vp-p (PAL), 100/7.5/77/7.5 (NTSC) or 100/0/75/0 (PAL) color bar
B : 0.7 Vp-p
R–Y/R : BNC type, 75Ω
R–Y: 0.7 Vp-p (NTSC) or 0.525 Vp-p (PAL), 100/7.5/77/7.5 (NTSC) or 100/0/75/0 (PAL) color bar
R : 0.7 Vp-p
S VIDEOMini : DIN 4-pin, 75Ω
Y: 1.0 Vp-p
C: 0.286 Vp-p (NTSC) or 0.3 Vp-p (PAL)
SYNC : BNC type, 75Ω, 0.286 to 4.0 Vp-p (NTSC) or 0.3 to 4.0 Vp-p (PAL)

- B B OUT : Black burst output
  BNC type × 4, 75Ω, 0.286 Vp-p

Analog audio output

- LINE OUTPUT : XLR 3-pin, +4 dBu (600 Ω load)
- MONITOR OUTPUT : Phono jack, –10 dBu (50 kΩ load) (maximum output level 2.5 Vrms)

Digital output

- SDI OUT R (PGM), QSDI OUT R (option)
  : BNC type, 75Ω, 0.8 Vp-p, bitrate 270 Mbps, with audio

System Controler

- PLAYER1: ***=P1 : CN4/SY-219 : D-SUB 9P Female
- PLAYER2: ***=P2 : CN5/SY-219 : D-SUB 9P Female
- AUX : ***=AUX CN6/SY-219 : D-SUB 9P Female
- RECORDER: ***=REC CN3/SY-219
  : D-SUB 9P Female

Standard RS-422A Conformity

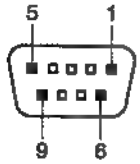

Pin No.	Signal	Function
1	FG	Frame Ground
2	*** RX-A IN	Receive data "A"
3	*** TX-B OUT	Receive data "B"
4	*** TX-COM	Transmit data Common
5	–	Not used
6	*** RX-COM	Receive data Common
7	*** RX-B IN	Receive data "B"
8	*** TX-A OUT	Transmit data "A"
9	FG	Frame Ground

- GPI (232) : D-SUB 9P Female, Male

Standard RS-232C Conformity

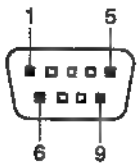

Pin No.	Signal	Function
1	–	Not used
2	GPI RXD IN	Receive data
3	GPI TXD OUT	Transmit data
4	(DTR)	(6P Internal Connection)
5	SG	Signal Ground
6	(DSR)	(4P Internal Connection)
7	(RTS)	(8P Internal Connection)
8	(CTS)	(7P Internal Connection)
9	–	Not used

- GPI(PARALLEL) : CN7/SY-219 : D-SUB 9P Female

Standard TTL Out Put: OFF 3.5 to 5 V
ON 0.5 V and less
(20 mA and less)
Relay contact: Rating DC 30 V 1 A and less
(Resistor Load)

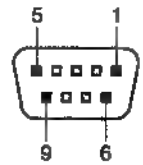

Pin No.	Signal	Function
1	TTL1 OUT	TTL Out 1
2	RELAY1	Relay contact 1 Common
3	RETURN1	Relay contact 1 Normal Open
4	TTL3 OUT	TTL Out 3
5	GND	Ground
6	TTL2 OUT	TTL Out 2
7	RELAY2	Relay contact 2 Common
8	RETURN2	Relay contact 2 Normal Open
9	TTL4 OUT	TTL Out 4

• CONTROL PANEL CN8/SY-219 : D-SUB 15P Female
Standard Receive/Tranmit data: RS-422A Conformity
-FRAME OUT:
Open Collector

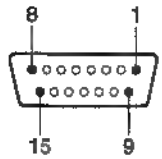

Pin No.	Signal	Function
1	PANEL RX-B IN	Receive data "B"
2	PANEL RX-A IN	Receive data "A"
3	PANEL TX-B OUT	Transmit data "B"
4	PANEL TX-A OUT	Transmit data "A"
5	–	Not used
6	–	Not used
7	–	Not used
8	-FRAME OUT	Frame Signal Out (Invert)
9	GND	Ground
10	GND	Ground
11	GND	Ground
12	GND	Ground
13	+12 V OUT	Power Out
14	+12 V OUT	Power Out
15	+12 V OUT	Power Out

DME Switcher

• DFS CN4/IF-547: D-sub 9P, Female
Standard RS-422A Conformity

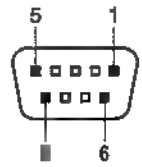

Pin No.	Signal	Function
1	FG	Frame Ground
2	SW RX-A IN	Switcher Receive "A"
3	SW TX-B OUT	Switcher Transmit "B"
4	SW TX-COM	Transmit Common
5	–	–
6	SW RX-COM	Receive Common
7	SW RX-B IN	Switcher Receive "B"
8	SW RX-A OUT	Switcher Transmit "A"
9	FRAME GND	Frame Ground

Disc Recorder Connect

- SCSI 1 to 4 : 50 Pin High-Demsity SCSI

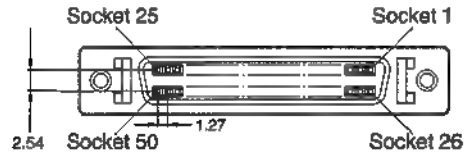

Pin No.	Signal	Function
1	GND	Ground
2	GND	Ground
3	GND	Ground
4	GND	Ground
5	GND	Ground
6	GND	Ground
7	GND	Ground
8	GND	Ground
9	GND	Ground
10	GND	Ground
11	GND	Ground
12	GND	Ground
13	N.C.	Not Connect
14	GND	Ground
15	GND	Ground
16	GND	Ground
17	GND	Ground
18	GND	Ground
19	GND	Ground
20	GND	Ground
21	GND	Ground
22	GND	Ground
23	GND	Ground
24	GND	Ground
25	GND	Ground

Pin No.	Signal	Function
26	$\overline{DB0}$	Data Line 0
27	$\overline{DB1}$	Data Line 1
28	$\overline{DB2}$	Data Line 2
29	$\overline{DB3}$	Data Line 3
30	$\overline{DB4}$	Data Line 4
31	$\overline{DB5}$	Data Line 5
32	$\overline{DB6}$	Data Line 6
33	$\overline{DB7}$	Data Line 7
34	$\overline{DBP}$	Data Line Parity
35	GND	Ground
36	GND	Ground
37	GND	Ground
38	TMPW	Terminator Power
39	GND	Ground
40	GND	Ground
41	$\overline{ATN}$	Attention
42	GND	Ground
43	$\overline{BSY}$	Busy
44	$\overline{ACK}$	Acknowledge
45	$\overline{RST}$	Reset
46	$\overline{MSG}$	Message
47	$\overline{SEL}$	Select
48	C/D	Control/Data
49	$\overline{REQ}$	Request
50	I/O	Input/Output

Computer Connection

• PRINTER : D-SUB 25P
Standerd Centronics Compatible Interface Conformity

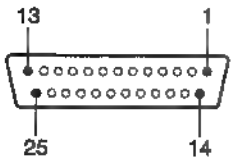

Pin No.	Signal	Pin No.	Signal
1	$\overline{\text{STROBE}}$	14	$\overline{\text{AUTOFD}}$
2	DATA1	15	$\overline{\text{ERROR}}$
3	DATA2	16	$\overline{\text{INIT}}$
4	DATA3	17	$\overline{\text{SLCTIN}}$
5	DATA4	18	GND
6	DATA5	19	GND
7	DATA6	20	GND
8	DATA7	21	GND
9	DATA8	22	GND
10	$\overline{\text{ACKNLG}}$	23	GND
11	BUSY	24	GND
12	PE	25	GND
13	SLCT		

• COM1, COM2 : D-SUB 9P, Male
Standerd RS-232C Conformity

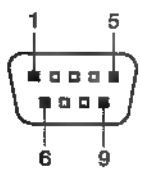

Pin No.	Signal	Function
1	CD	Carriere Detector
2	RD	Receive data
3	TD	Transmit data
4	ER	Data Terminal Ready
5	SG	Signal Line Ground
6	DR	Deta set Ready
7	RS	Request to Send
8	CS	Ready for Sending
9	RI	Ring Indicator

• MOUSE : Mini DIN 6P

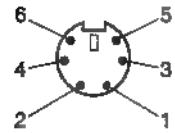

Pin No.	Signal	Pin No.	Signal
1	Serial Data	4	+5 V
2	Advanced	5	Mouse Lock
3	Ground	6	Advanced

• KEYBOARD

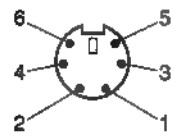

Pin No.	Signal	Pin No.	Signal
1	Serial Data	4	+5 V
2	Advanced	5	Keyboard Lock
3	Ground	6	Advanced

• DISPLAY MONITOR : D-SUB 15P
Resolution : 1024×768 Pixels, 65000 Colors
Vertical Refresh Rate : 75 Hz

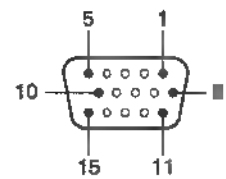

Pin No.	Signal	Pin No.	Signal
1	Red	9	Not used
2	Green	10	Ground
3	Blue	11	Advanced
4	Advanced	12	Advanced
5	Ground	13	H sync
6	Analog Ground	14	V sync
7	Analog Ground	15	Not used
8	Analog Ground		

• SCSI : 50PIN High-Density SCSI

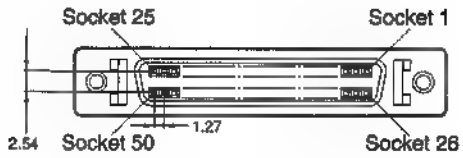

Pin No.	Signal	Pin No.	Signal
1	GND	26	$\overline{DB(0)}$
2	GND	27	$\overline{DB(1)}$
3	GND	28	$\overline{DB(2)}$
4	GND	29	$\overline{DB(3)}$
5	GND	30	$\overline{DB(4)}$
6	GND	31	$\overline{DB(5)}$
7	GND	32	$\overline{DB(6)}$
8	GND	33	$\overline{DB(7)}$
9	GND	34	$\overline{DB(P)}$
10	GND	35	GND
11	GND	36	GND
12	GND	37	GND
13	OPEN	38	TMPW
14	GND	39	GND
15	GND	40	GND
16	GND	41	$\overline{ATN}$
17	GND	42	GND
18	GND	43	$\overline{BSY}$
19	GND	44	$\overline{ACK}$
20	GND	45	$\overline{RST}$
21	GND	46	$\overline{MSG}$
22	GND	47	$\overline{SEL}$
23	GND	48	$\overline{C/D}$
24	GND	49	$\overline{REQ}$
25	GND	50	I/O

• ETHERNET : 10Base-T (RJ-45)

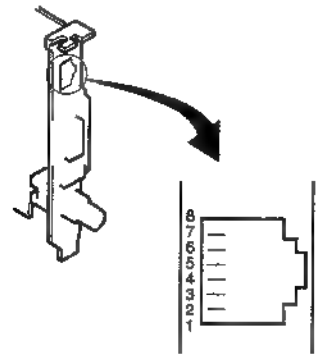

Pin No.	Signal	Pin No.	Signal
1	TD+	5	–
2	TD-	6	RD-
3	RD+	7	–
4	–	8	–

2-4. SWITCHES/JUMPERS/LEDS

2-4-1. ES-7

<AU-217 Board>

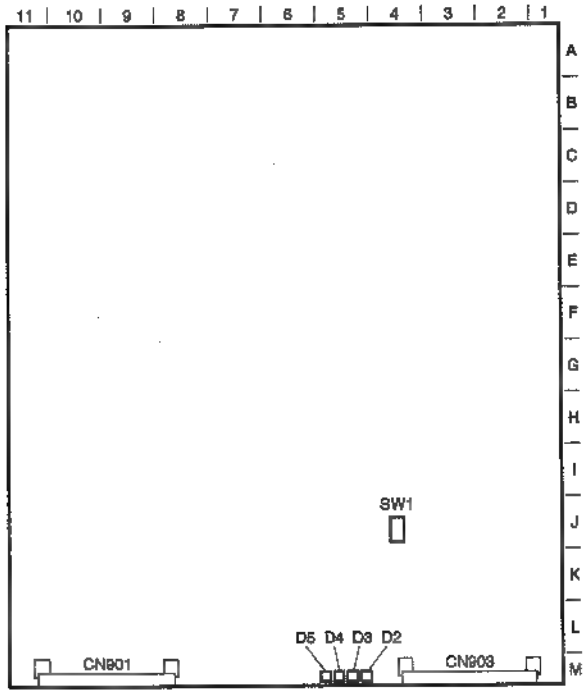

AU-217 Board A side

LEDs

D2 (M5), D3 (M5), D4 (M5), D5 (M5): Factory Use

Switches

SW1 (J4): Reset Switch (push-to-on switch)
When pressed, this switch resets the MPU.

<BF-54 Board>

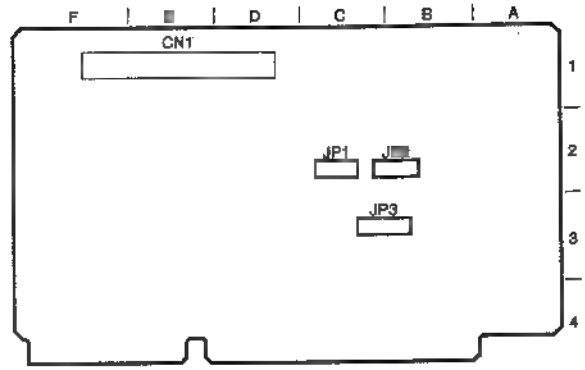

BF-54 Board A side

JUMPERS

JP1 (C2): VSYNC interrupt select
CAUTION: Do not change the setting at shipping from factory.
Setting at shipping from factory:
IRQ9 short-circuited

JP2 (C2): SY-219 SYNC interrupt select
CAUTION: Do not change the setting at shipping from factory.
Setting at shipping from factory:
None (a jumper is placed on IRQ5 but inserted only halfway)

JP3 (C3): SY-219 communication memory address select
CAUTION: Do not change the setting at shipping from factory.
Setting at shipping from factory:
C8000h short-circuited

<DA-95 Board>

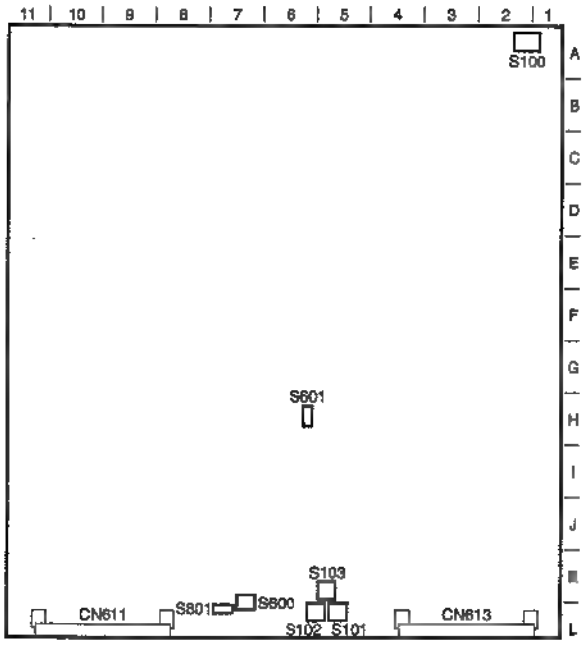

DA-95 Board A side

SWITCHES

S100 (A2): 75 ohms terminator ON/OFF switch (for REF INPUT signal)
Setting at shipping from factory: ON

S101 (L5): H PHASE (MSB) adjust switch for BB (REF OUT) signal

S102 (L5): H PHASE (LSB) adjust switch for BB (REF OUT) signal

CAUTION: Do not move these switches other than when to perform board adjustments.

These switches are used to advance BB's H PHASE from that of VIDEO OUT signal.
Let the normal value of H PHASE be 0 ns. By setting smaller values to these switches, signal phase of VIDEO OUT delays from that of BB (REF OUT). (1 step = 70 ns)

Be careful that H PHASE adjustment range specification varies when changed the value above.
Following adjustments are required when changed the value above.

Sub-carrier fine adjustment potentiometer = RV612 (during internal sync operation)
H PHASE adjustment potentiometer = RV100 (during external input sync operation)
Sub-carrier fine adjustment potentiometer = RV611 (during external input sync operation)
BB (REF OUT) sub-carrier fine adjustment potentiometer = RV804 (during external input sync operation)

Switch settings at shipping from factory and in normal operation: S101 = 7, S102 = 8

S103 (K5): V BLANKING PHASE adjust switch

CAUTION: Do not move these switches other than when to perform board adjustments.

Display Start Lines

525

SW's values	Filed 1	Filed 2
B	21 line	20 line
A	20 line	20 line
9	19 line	19 line
8	18 line	18 line
7	17 line	17 line
6	16 line	16 line
5	15 line	15 line
4	14 line	14 line
3	13 line	13 line
2	12 line	12 line
1	11 line	11 line
0	10 line	10 line

625

SW's values	Filed 1	Filed 2
3	23 line	23 line
2	22 line	22 line
1	21 line	21 line
0	20 line	20 line

Switch settings at shipping from factory and at normal operation: 525 = B, 625 = 3

S600 (K7): sub-carrier phase adjust switch (external input sync operation)
This switch inverts the phase of VIDEO-OUT sub-carrier phase by 180 degrees during external input sync operation.
This switch is used for VIDEO-OUT SCH adjustment when changed H phase with RV100 during external input sync operation. Use RV611 for fine adjustment less than 180 degrees.
Setting at shipping from factory: 0°

S601 (H6): sub-carrier phase adjust switch (internal sync operation)
CAUTION: Do not move this switch other than when to perform board adjustments.
This switch inverts the phase of VIDEO-OUT sub-carrier phase by 180 degrees during internal sync operation.
Setting at shipping from factory and in normal operation: 0°

S801 (L7): BB (REF-OUT) sub-carrier phase fine adjust switch (external input sync operation)
This switch inverts the phase of BB (REF OUT) sub-carrier phase by 180 degrees during external input sync operation.
This switch is used in BB (REF-OUT) SCH adjustment when changed H phase with RV100 during external input sync operation. Use RV804 for fine adjustment less than 180 degrees.
Setting at shipping from factory: 0°

<SY-219 Board>

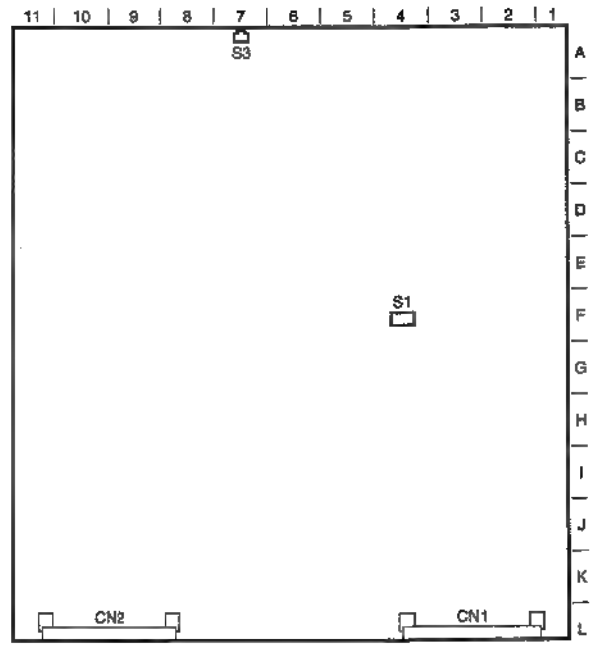

SY-219 Board A side

S1 (F4): mode select switch (4-bit DIP switch)
CAUTION: Do not set S1-1, -3 and -4 to OFF: special mode.

S1-1
ON : normal mode (setting at shipping from factory)
OFF : specical mode
S1-2
ON : normal mode (setting at shipping from factory)
OFF : write mode when replaced the flash memory
When replaced the flash memory, use this mode to download the program.
S1-3
ON : normal mode (setting at shipping from factory)
OFF : special mode
S1-4
ON : normal mode (setting at shipping from factory)
OFF : special mode

S3 (A7): reset switch (push-to-on switch)
This switch resets the main unit (except PC block) of Edit Station. This switch is used when updated content of the flash memory located on SY-219 board. Press this switch by inserting a ball-point pen, etc. into a hole located between AUX and RECORDER connectors on the real panel.

<LE-154 Board>

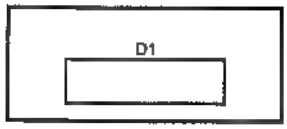

LE-154 Board A side

D1 (A1): power indicator LED (green)

This LED is illuminated when the power is turned on.

This LED flashes when one (or more) of four cooling fans installed on the rear panel stopped.

2-4-2. ESBK-7021

<MY-74 Board>

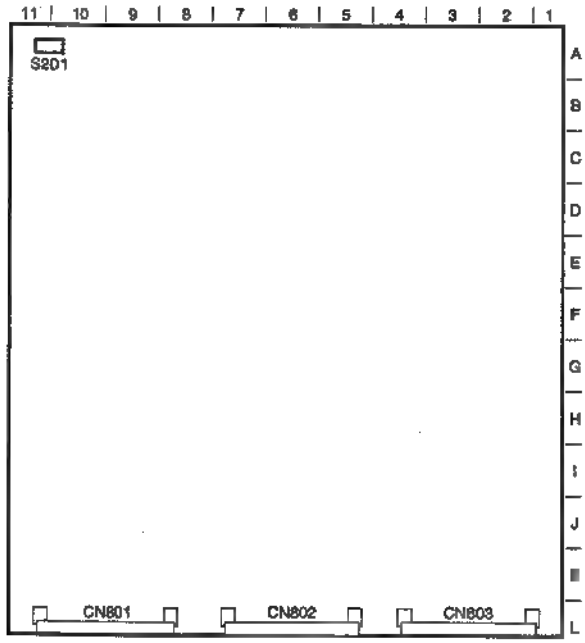

MY-74 Board A side

S201 (A11): test switch

CHROMA READ ADDRESS rounding circuit ON/OFF

Setting at shipping from factory: OFF

2-4-3. ESBK-7031

<IO-119 Board>

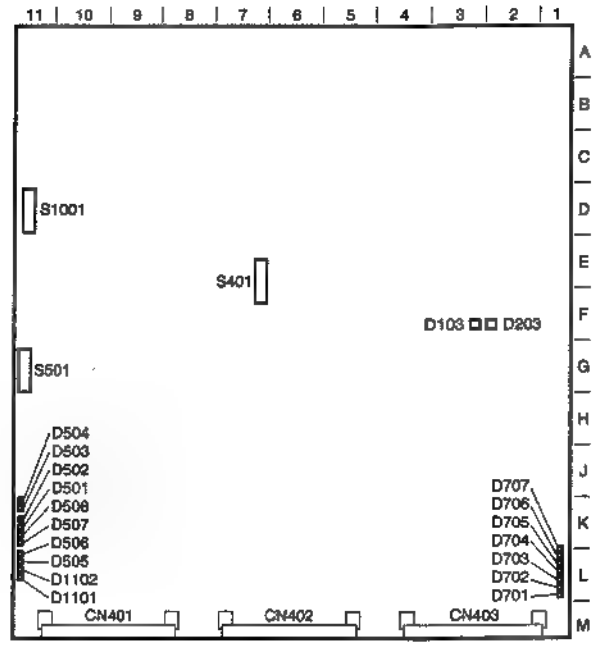

IO-119 Board A side

LED Indicator

D103 (F3) : P1 QSDI
D203 (F2) : P2 QSDI

} Input Signal exists: Lighting
Input Signal does not exist: Not lighting

D501 (K11) : AUDIO MODE1
D502 (K11) : AUDIO MODE2
D503 (K11) : QSDI 1 TIMES NORMAL SPEED
D504 (K11) : QSDI 4 TIMES NORMAL SPEED
D505 (L11) : QSDI IN
D506 (L11) : QSDI OUT

} When the unit is put into the mode shown in the left, the indicator lighting.

D507 (L11) : MPU NO EXIST
D508 (L11) : MPU EXIST

} When the unit is in the state shown in the left, the indicator lighting

* D501-508: Error All brinks
(MPU Serial transmission SH_A Error)

D701 (L1) : ADJUSTMENT MODE ——
Adjustment: Lighting

D702 (L1) : NTSC
D703 (L1) : PAL
} When the unit is put into the mode shown in the left, the indicator lighting.

* D701-703: Error All brinks
(N/P Error)

D704 (L1) : MPU SRIAL TRANSMISSION SH_B
D705 (L1) : SH_A WORK
} Normal: Lighting
Error : Brinks

D706 (L1) : IO-148 NO EXIST
D707 (L1) : IO-148 EXIST
} When the unit is in the state shown in the left, the indicator lighting

D1101 (L11) : +5 V
D1102 (L11) : –5 V
} Normal: Lighting
Error : Not lighting

S401 (E7): Factory use
Factory Setting

S501 (G11): Factory use
Factory Setting

S1001 (D11): Factory use
Factory Setting

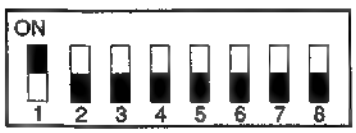

2-4-4. ESBK-7032

<IO-148 Board>

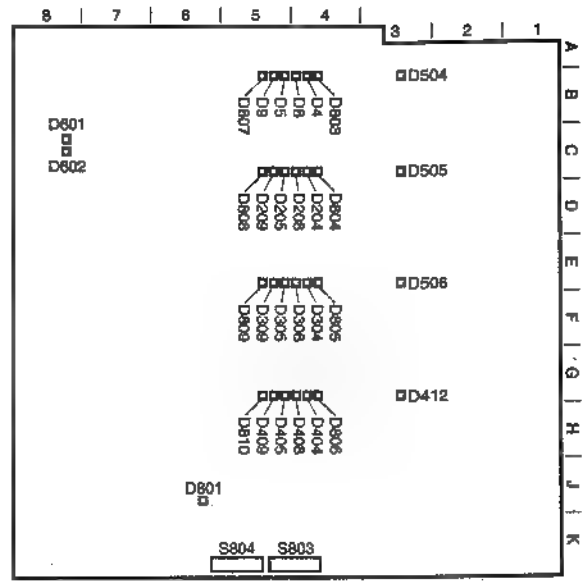

IO-148Board A side

LED Indicator

D504 (B3): SDI P1 ——
Input Signal exists: Lighting
Input Signal does not exist: Not lighting

D9 (B5): SDI P1 AUDIO CH1 ERROR
D5 (B5): SDI P1 AUDIO CH2 ERROR
D8 (B4): SDI P1 AUDIO CH3 ERROR
D4 (B4): SDI P1 AUDIO CH4 ERROR
} Normal: Lighting
Error: Not lighting

D505 (C3): SDI P1 ——
Input Signal exists: Lighting
Input Signal does not exist: Not lighting

D209 (C5): SDI P2 AUDIO CH1 ERROR
D205 (C5): SDI P2 AUDIO CH2 ERROR
D208 (C4): SDI P2 AUDIO CH3 ERROR
D204 (C4): SDI P2 AUDIO CH4 ERROR
} Normal: Lighting
Error: Not lighting

D506 (E3): SDI AUX ——
Input Signal exists: Lighting
Input Signal does not exist: Not lighting

D309 (E5): SDI AUX AUDIO CH1 ERROR
D305 (E5): SDI AUX AUDIO CH2 ERROR
D308 (E4): SDI AUX AUDIO CH3 ERROR
D304 (E4): SDI AUX AUDIO CH4 ERROR
} Normal: Lighting
Error: Not lighting

D412 (G3): SDI R ——— Input Signal exists: Lighting
Input Signal does not exist: Not lighting

D409 (G5): SDI R AUDIO CH1 ERROR
D405 (G5): SDI R AUDIO CH2 ERROR
D408 (G4): SDI R AUDIO CH3 ERROR
D404 (G4): SDI R AUDIO CH4 ERROR
} Normal: Lighting
Error: Not lighting

D601 (C8): PAL
D602 (C8): NTSC
} When the unit is put into the mode shown in the left, the indicator lighting.

D801 (J6): SBX1601, 1602
ADJUSTMENT MODE ——
Adjustment: Lighting

D803 (B4): V1 IN P1
D804 (C4): V1 IN P2
D805 (E4): V1 IN AUX
D806 (G4): V1 IN R
D807 (B5): V2 IN P1
D808 (C5): V2 IN P2
D809 (E5): V2 IN AUX
D810 (G5): V2 IN R
} When the unit is put into the mode shown in the left, the indicator lighting.

S803 (K4): Factory use
Factory Setting

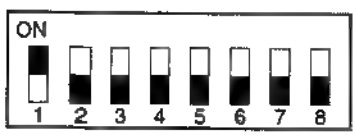

S804 (K5): Factory use
Factory Setting

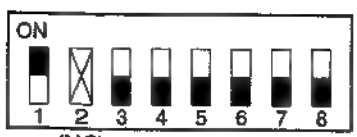

2-4-5. ESBK-7045

<MPU-95 Board>

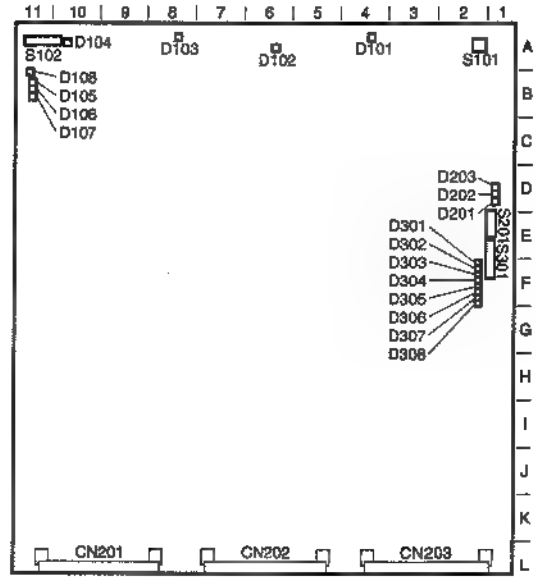

MPU-95 Board A side

LED Indicator

D101 (A4) : This LED lights in red while getting access to SCSI4.
D102 (A6) : This LED lights in red while getting access to SCSI3.
D103 (A8) : This LED lights in red while getting access to SCSI2.
D104 (A10) : This LED lights in red while getting access to SCSI1.
D105 (B11) : This LED is used for adjustment.
D106 (B11) : This LED is used for adjustment.
D107 (B11) : This LED is used for adjustment.
D108 (B11) : This LED is used for adjustment.
D201 (E1) : This LED is used for adjustment.
D202 (D1) : This LED is used for adjustment.
D203 (D1) : This LED flashes in red while the CPU of IC201 is working normally.
D301 (F2) : This LED is used for adjustment.
D302 (F2) : This LED is used for adjustment.
D303 (F2) : This LED is used for adjustment.
D304 (F2) : This LED is used for adjustment.
D305 (F2) : This LED is used for adjustment.
D306 (F2) : This LED is used for adjustment.
D307 (F2) : This LED is used for adjustment.
D308 (F2) : This LED flashes in red while the CPU of IC301 is working normally.

Switches

S101 (A2) : ESBK-7041 reset switch
S102 (A10) : Adjustment switch
S102-1 to S102-8 are used in the OFF position.
S201 (E1) : Adjustment switch
This switch can be used in any position.
S301 (F1) : Adjustment switch
S301-1 to S301-8 are used in the OFF position.

2-5. Location of Main Parts

2-5-1. Location of Main Parts

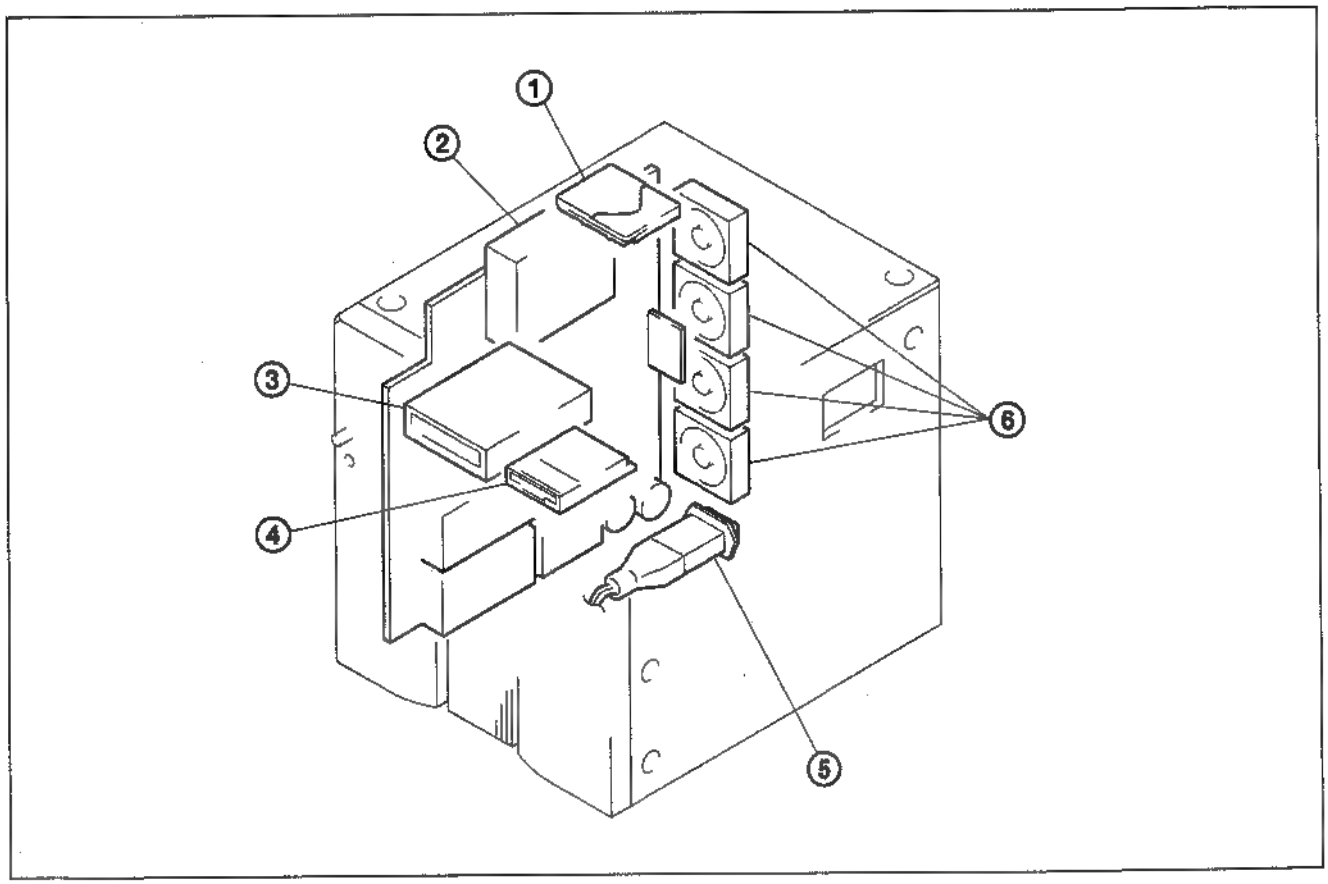

① Hard Disk Drive Ass'y
② Power Supply (RE-122/122A Board)
③ CD ROM Drive
④ Floppy Disk Drive
⑤ AC 3P Inlet
⑥ DC FAN

2-5-2. Board Layouts

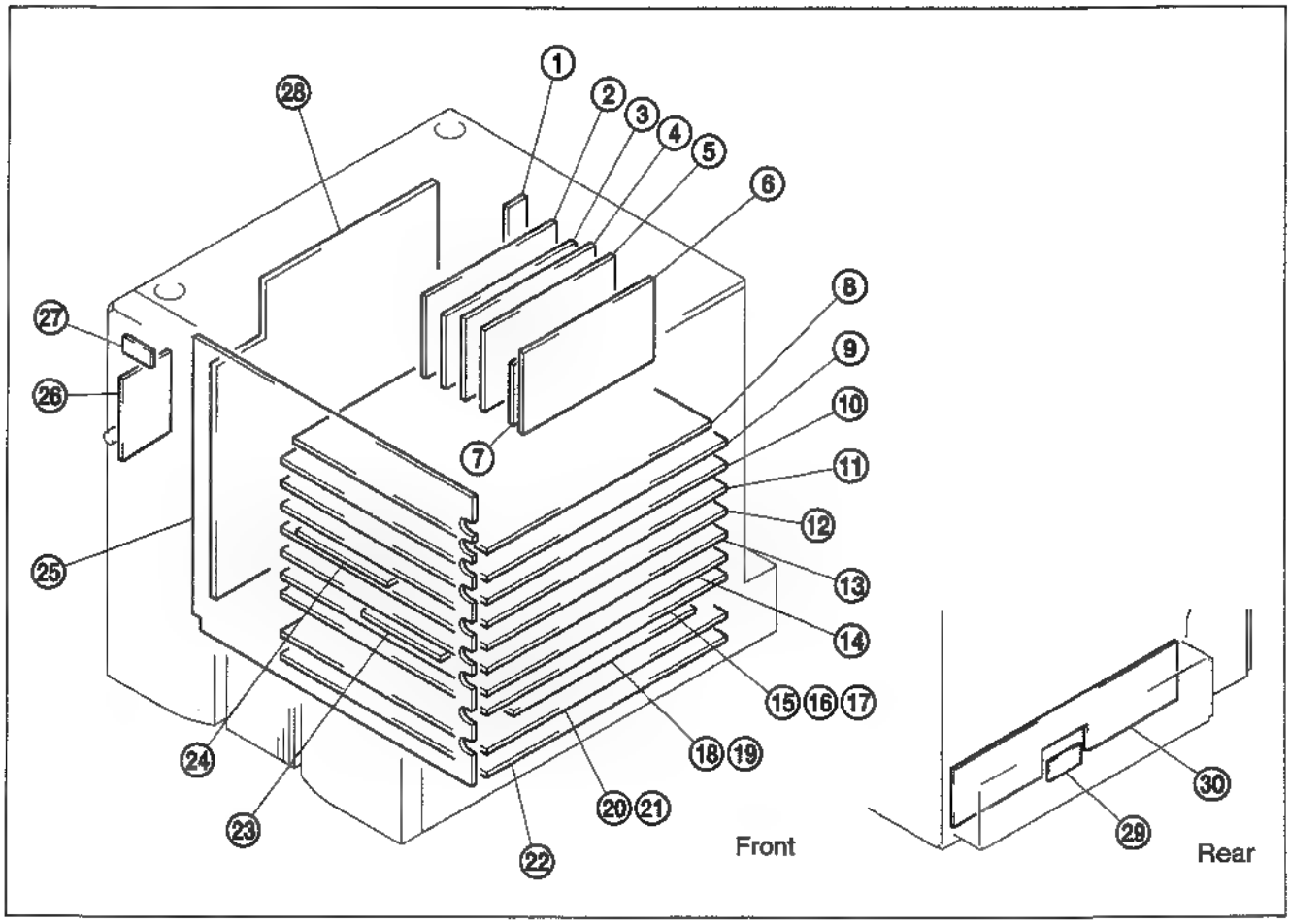

① CN-1242
② SCSI (ESBK-7051)
③ E.TM (ESBK-7052)
④ BF-54
⑤ VGA Board
⑥ VPR-18
⑦ DSC-75/75A
⑧ PC Main Board (P/I-P55TP4XE)
⑨ SY-219
⑩ MPU-95 (ESBK-7041)
⑪ RP-89/89A (ESBK-7041)
⑫ IO-119 (ESBK-7031)
⑬ AD-115/115A
⑭ DA-95/95A
⑮ FM-43/43A (ESBK-7021)
⑯ FM-44/44A (ESBK-7023)
⑰ IF-547/547A (ESBK-7025)
⑱ PU-84A (ESBK-7022)
⑲ VE-33/33A (ESBK-7024)
⑳ MY-74 (ESBK-7021)
㉑ MY-75 (ESBK-7023)
㉒ AU-217
㉓ DAC-20/20A (ESBK-7025/7071)
㉔ IO-148 (ESBK-7032)
㉕ MB-639
㉖ FP-74
㉗ LE-154
㉘ RE-122/122A
㉙ CN-1238
㉚ CN-1237

• **Circuit Configuration List**

1. SP CODE indicares Supply Code
2. In the SP CODE column, "P" indicates Printed Circuit Board, "M" Mounted Circuit Board, and "U" Unstock Part.

MODEL	BOARD	CIRCUIT FUNCTION	SP CODE
ES-7	AD-115/115A	A/D BOARD (VIDEO INPUT)	M
	AU-217	AUDIO MIXER BOARD	M
	BF-54	BUFFER BOARD	M
	CN-1237	AUDIO CONNECTOR BOARD	M
	CN-1238	AUDIO CONNECTOR BOARD	P
	CN-1242	CONNECTOR BOARD	M
	DA-95/95A	D/A BOARD (VIDEO OUTPUT)	M
	DSC-75/75A	VRAM BOARD	M
	FP-74	FRONT PANEL BOARD	M
	LE-154	LED BOARD	P
	MB-639	MOTHER BOARD	M
	PC Main Board (P/I-P55TP4XE)	CPU BOARD	M
	RE-122/122A	POWER SUPPLY BOARD	M
	SY-219	SYSTEM CONTROL BOARD	M
	VGA Board	VGA BOARD	M
	VPR-18	VIDEO I/O BOARD	M
ESBK-7021	FM-43/43A	SWITCHER CONTROL & FRAME SYNCHRONIZER BOARD	M
	MY-74	MEMORY BOARD	M
ESBK-7022	PU-84A	3D EFFECT BOARD	U
ESBK-7023	FM-44/44A	SWITCHER CONTROL & FRAME SYNCHRONIZER BOARD	M
	MY-75	MEMORY BOARD	M
ESBK-7024	VE-33/33A	3D EFFECT BOARD	U
ESBK-7025	DAC-20/20A	MONITOR BOARD	[redacted]
	IF-547/547A	EXT SW'ER I/F BOARD	M
ESBK-7031	IO-119	QSDI I/F BOARD	U
ESBK-7032	IO-148	SDI I/F BOARD	[redacted]
ESBK-7041	MPU-95	DISK UNIT CONTROL BOARD	M
	RP-89/89A	REC/PLAY BOARD	M
ESBK-7051	SCSI	SCSI BOARD	U
ESBK-7052	E.TM	ETHERNET BOARD	U
ESBK-7071	DAC-20/20A	MONITOR BOARD	U

2-6. CABINET REMOVAL

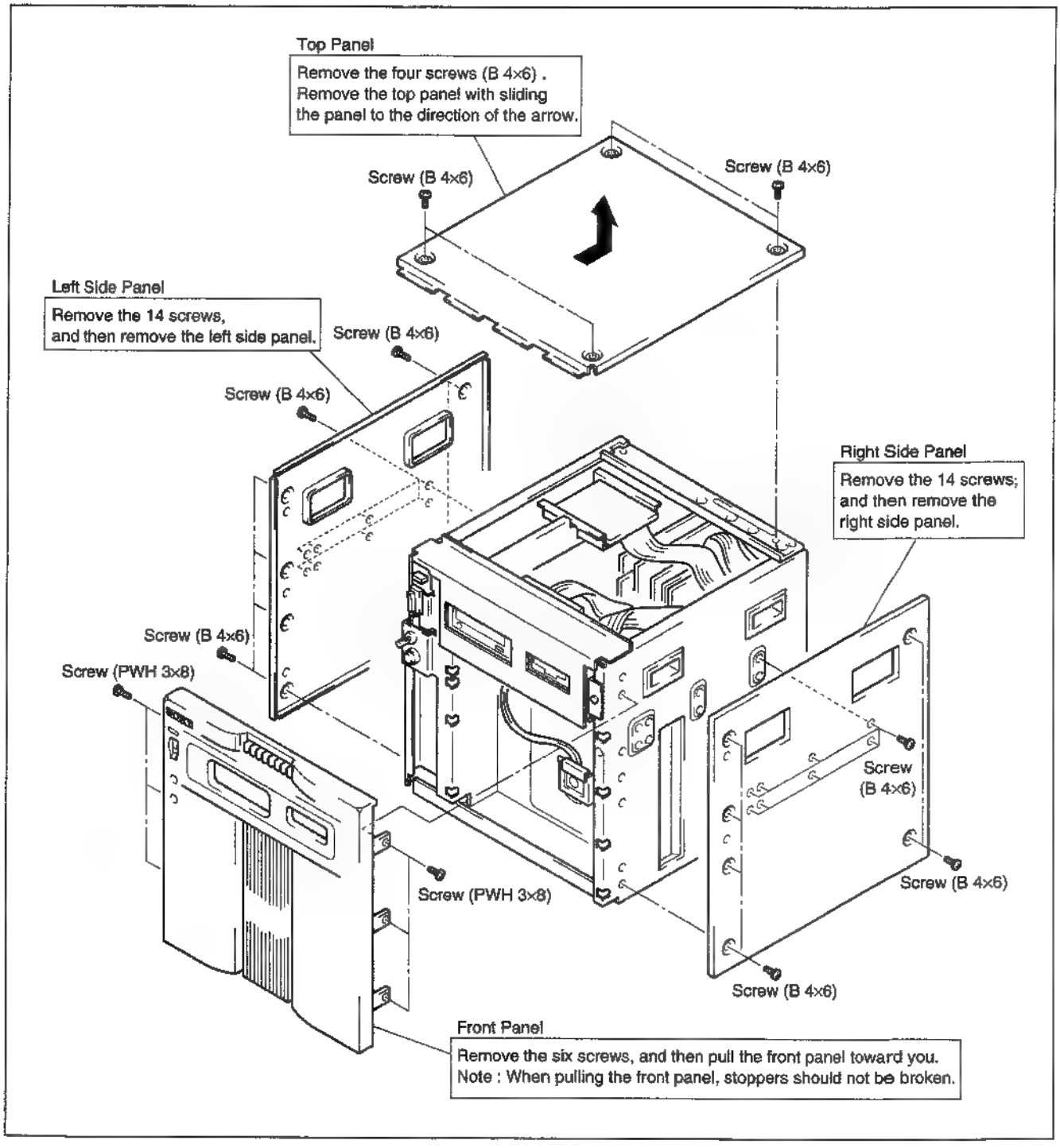

2-7. PARTS REPLACEMENT

2-7-1. Floppy Disk Drive/CD ROM Drive Replacement

① Remove the top panel and front panel. (Refer to section 2-6.)
② Disconnect the two 4-pin connectors, the 34-pin and 40-pin connectors of the flat cables.
③ Remove the twelve screws (BVTT 3 × 6), and then remove the spring CD and spring FDD.

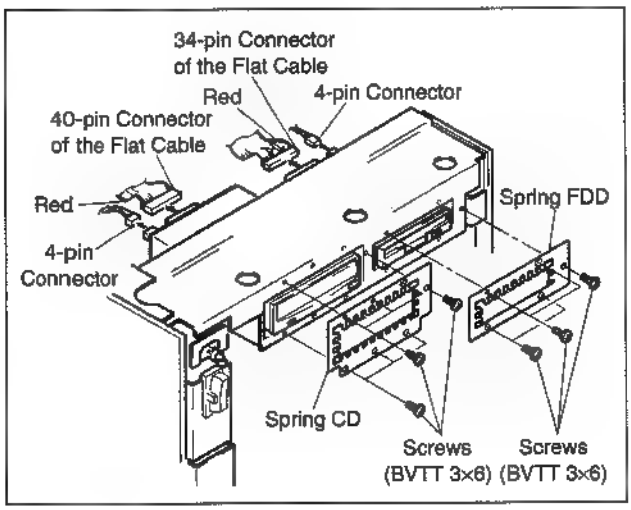

④ Remove the six screws (BVTT 3 × 6), and then remove the FD/CD assy.

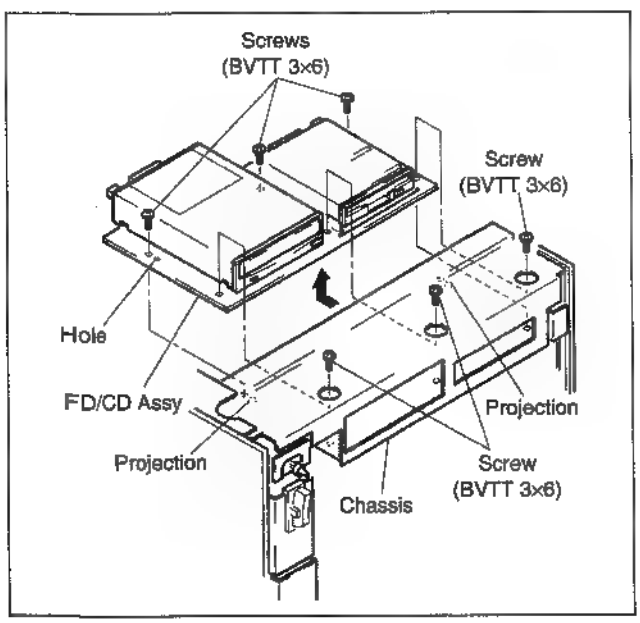

Installation:
Match two holes of the FD/CD assy to the projection of the chassis, and then tighten the screws.

⑤ Remove the eight screws (B 3 × 6), and then remove the floppy disk drive and CD ROM drive from the disk plate.

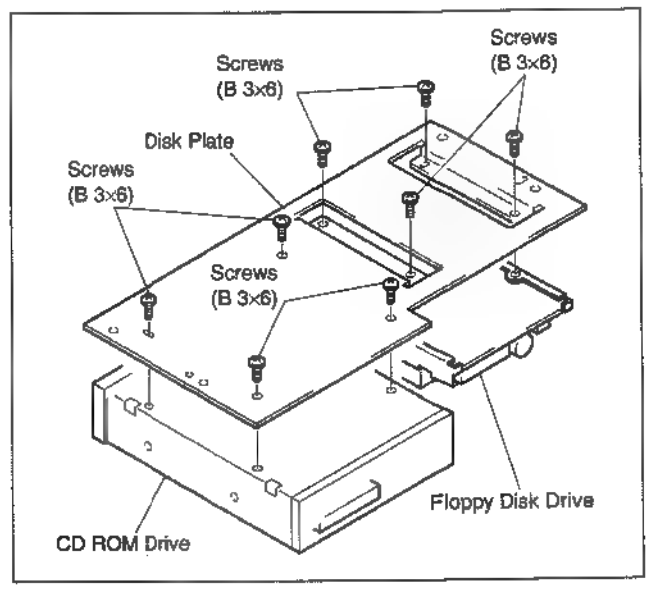

⑥ Turn the CD ROM drive upside down, and insert something such as a clip to the hole. Then, pull out the tray.

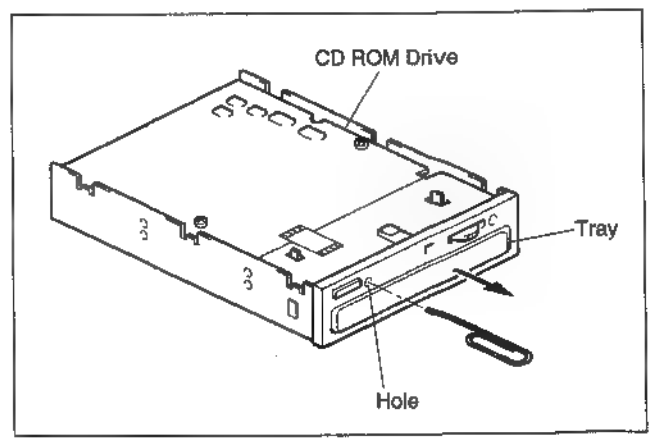

⑦ Push the tray to the direction of the arrow ■ during opening the two hooks 1 to the direction of the arrow A, and remove the tray panel. Push the two hooks 2 to the direction of the arrow, and remove the front panel.

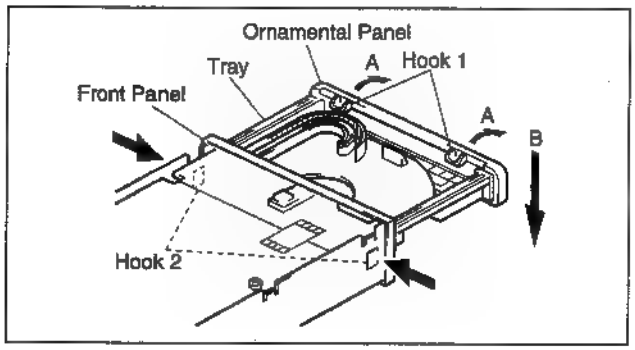

⑧ Remove the front panel during pushing the two hooks of the front panel in the floppy disk drive to the direction of the arrow.

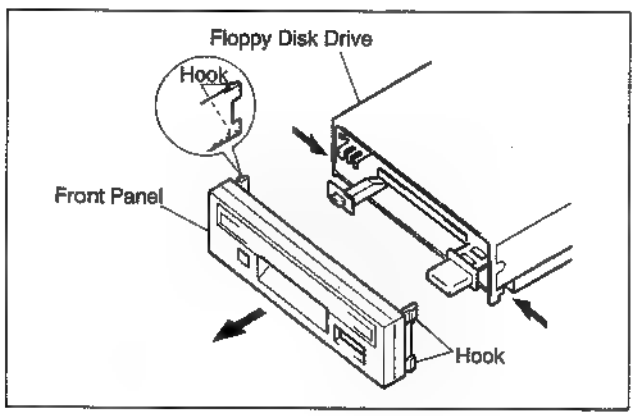

⑨ Remove the eject button during pushing the hook of the eject button down to the direction of the arrow with tweezers.

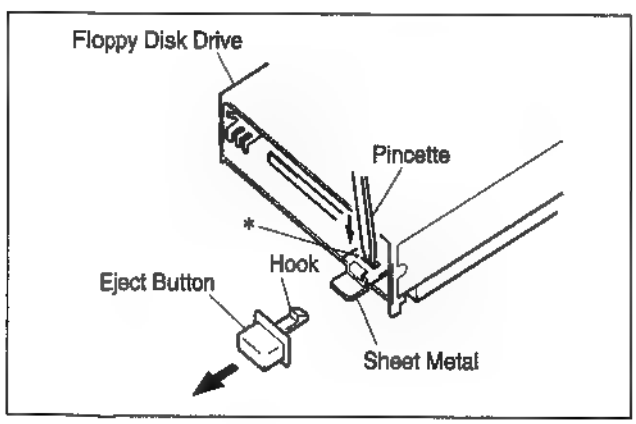

Note for installing the eject button:
Be sure to install the eject button with pushing the * portion by a cutting pliers. To push the sheet metal may cause trouble.

2-7-2. Hard Disk Drive Replacement

① Remove the top panel and left side panel. (Refer to section 2-6.)
② Disconnect the 4-pin connector and the 40-pin connector of the flat cable.
③ Remove the three screws (BVTT 3 × 6) and raise the spring plate. Then remove the hard disk drive assy.

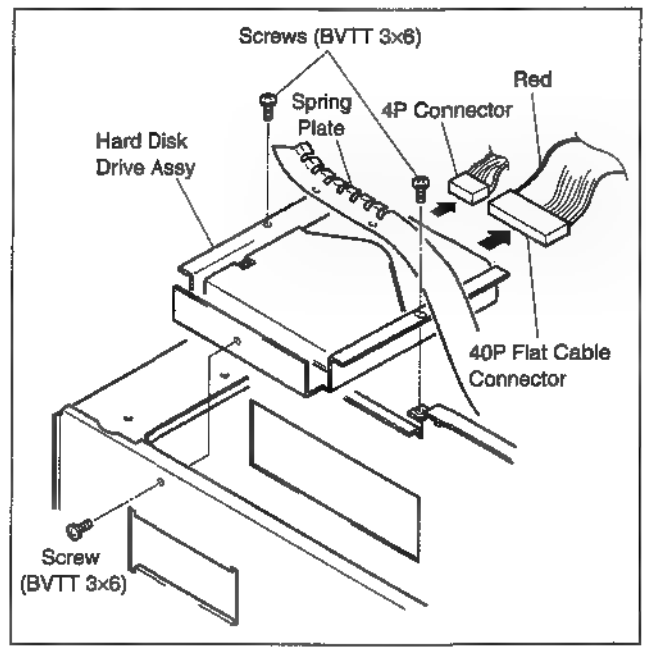

④ Remove the four HD fixing screws (inch-sized), and then remove the hard disk drive from the HDD plate.
Note: When removing, the hard disc drive should be avoided from physical shock.

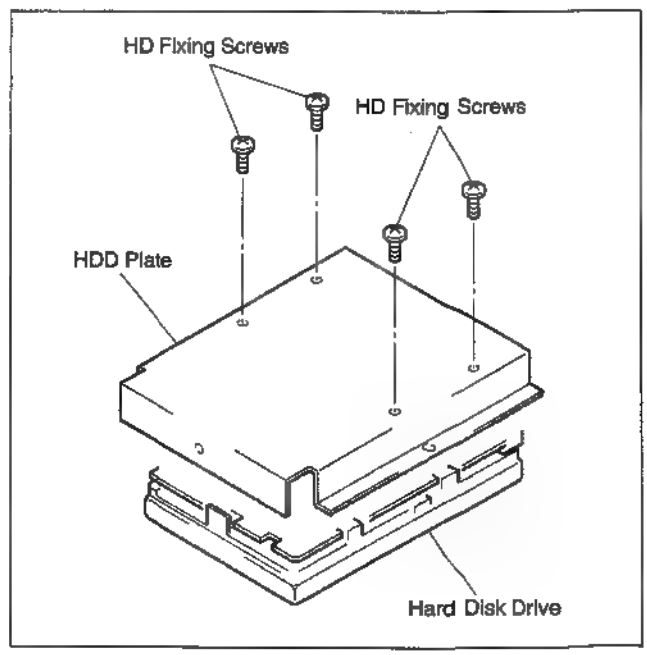

2-7-3. Power Block (RE-122 Board) Replacement

① Remove the top panel, front panel and left side panel. (Refer to section 2-6.)

② Remove the 17 screws (BVTT 3 × 6), and then open the power block to the direction of the arrow.

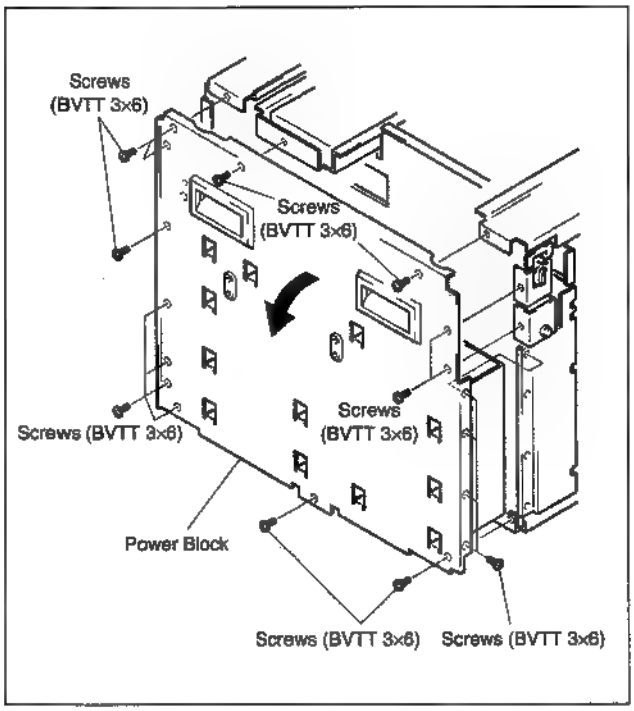

③ Remove the eight screws (BVTT3 × 6), and then remove the cover.

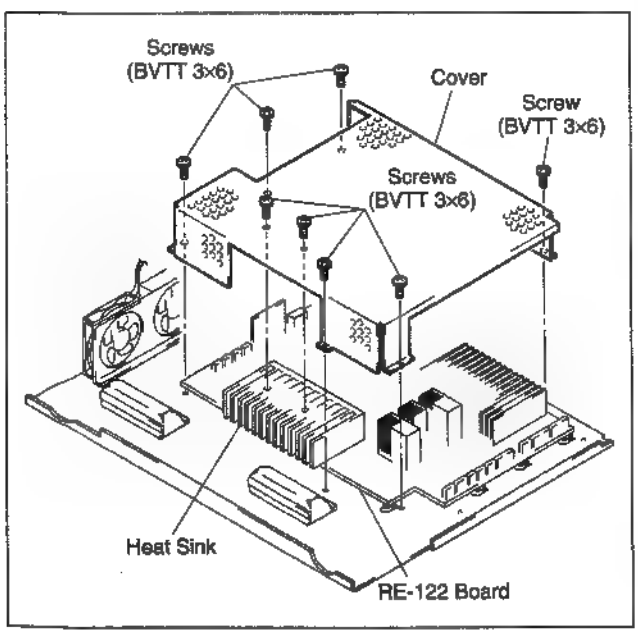

④ Disconnect the 15 connectors (CN4 to CN6, CN14, CN21 to CN26 and CN31 to CN35) on the RE-122 board.

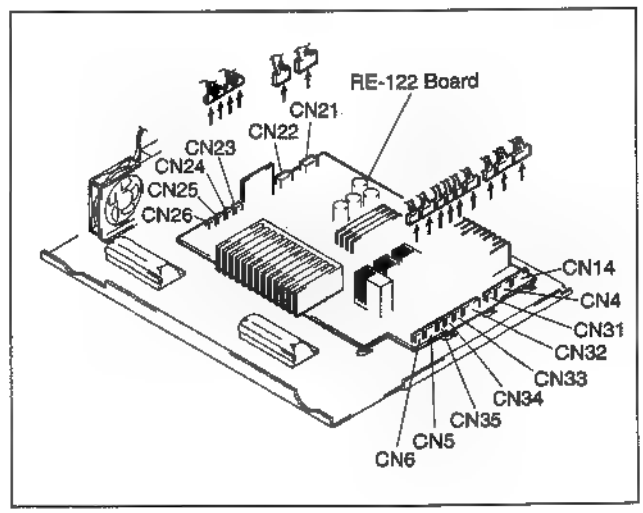

⑤ Remove the 13 screws (PWH 3 × 6), and then remove the RE-122 board.

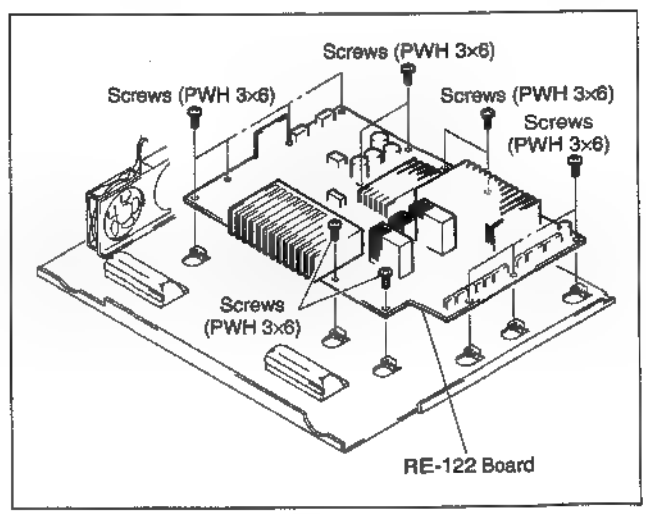

2-7-4. Fuse Replacement

The RE-122 board has eight fuses.
In the event of excessive current, cut the welded joints.
After looking into the cause, replace the fuses.

① Remove the RE-122 board. (Refer to section 2-7-3.)

② F1 to F6 and F11 : Remove the solders on the fuses from the reverse side of the RE-122. board.

F100 : Remove the solders on R134 and F100 from the reverse side of the RE-122 board. Then, replace the fuse.

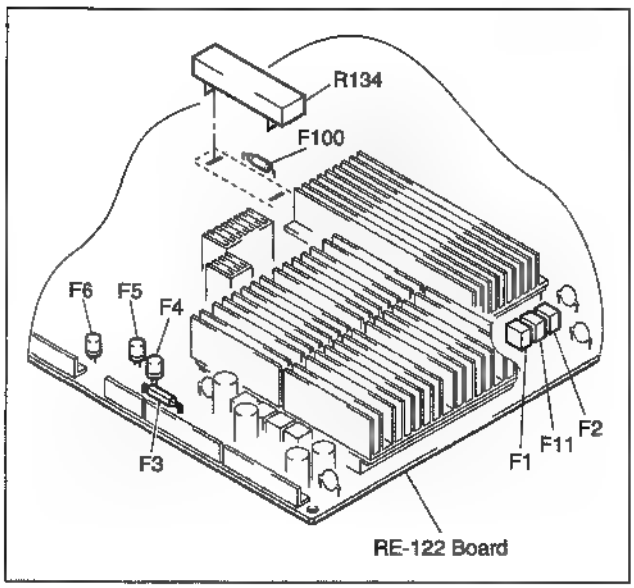

Fuses	Address	Sony Parts No.
F1, 2, 11	E-8	1-533-708-11 (3 A, 250 V)
F3	A-6	1-576-260-51 (10 A, 125 V)
F4, 5	A-6	1-532-966-11 (5 A, 125 V)
F6	A-5	
F100	E-4	1-532-496-11 (10 A, 250 V)

2-7-5. DC Fan Replacement

① Open the power block, and then remove the cover. (Refer to section 2-7-3.)

② Disconnect the four connectors of the DC fan from the RE-122 board.

③ Remove the four screws (B 3 × 30), and then remove the fixing plate.

Note: Install the fan so that the label should be the outside of the unit.

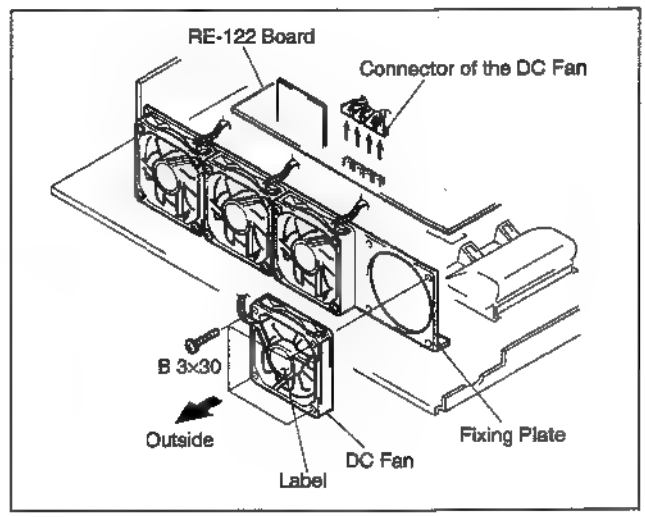

2-7-6. AU-217 Board Replacement

① Remove the two screws (B 3 × 6) from the rear panel, and then remove the AU-CN assy.

② Disconnect the six connectors (CN800 to CN805) from AU-217 board.

③ Pull out the AU-217 board from the MB-639 board to the direction of the arrow.

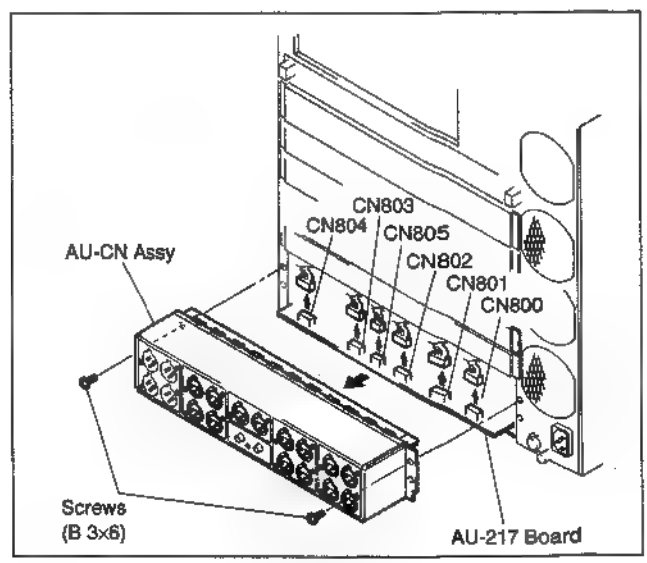

2-7-7. MB-639 Board Replacement

① Remove the AU-217 board. (Refer to section 2-7-6.)
② Disconnect all card rack boards from the side of the rear panel.
③ Disconnect the three connectors (CN6 to CN8) from the MB-639 board, and then remove the six screws (BVTT 3 × 6).

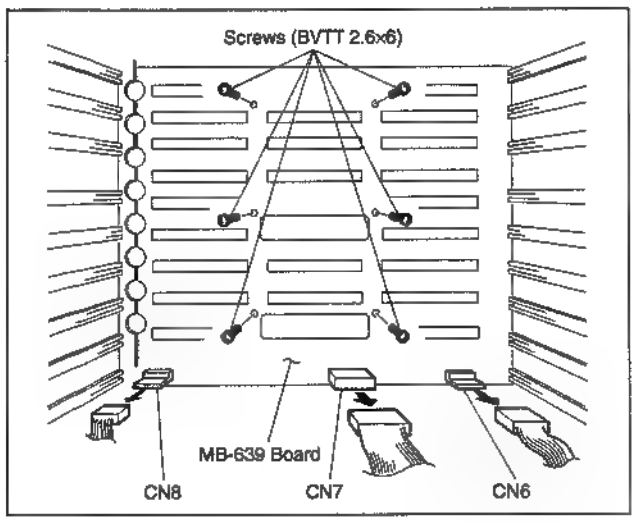

④ Remove the top panel and front panel. (Refer to section 2-6.)
⑤ Remove the FD/CD assy. (Refer to section 2-7-1.)
⑥ Disconnect the six connectors (CN1 to CN5 and CN14) from the MB-639 board and the connectors (SPEAKER) from the PC main board. Remove the three clampers of the harness, then remove the harness.

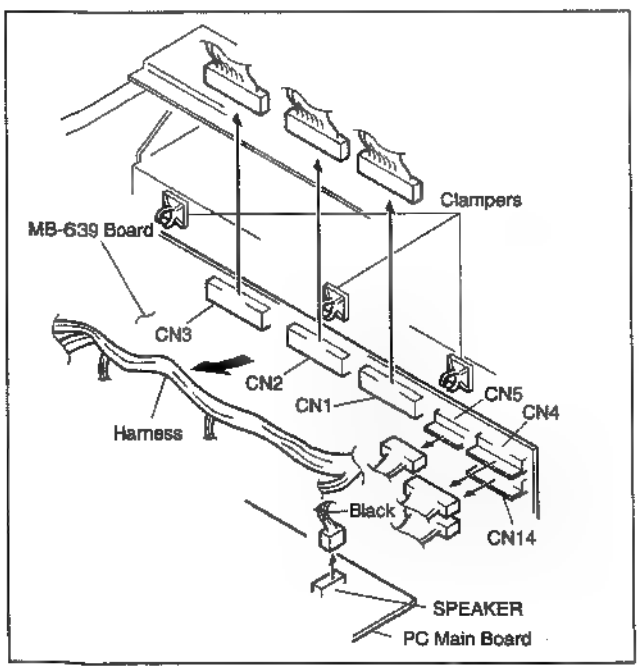

⑦ Remove the 17 screws (BVTT 3 × 5), and then open the power block. (Refer to section 2-7-3.)
⑧ Remove the 14 screws (BVTT 3 × 6), and then remove the front chassis assy.

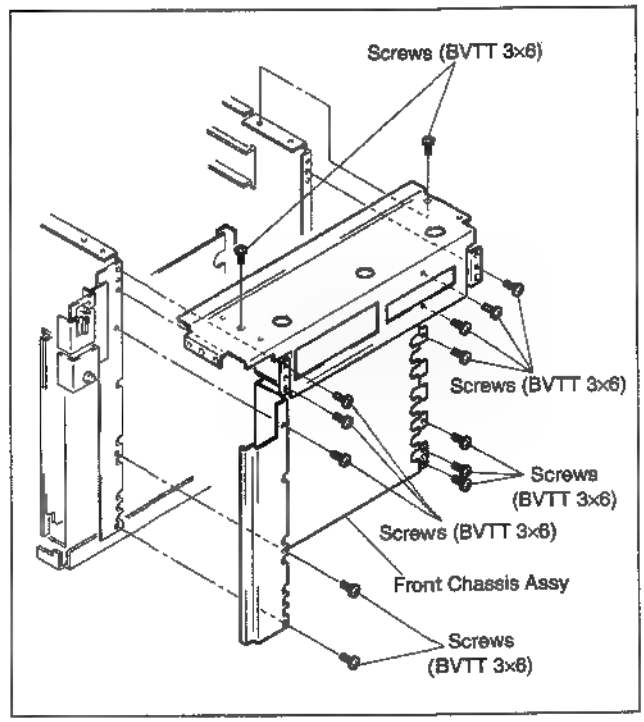

⑨ Remove the six screws (BVTT 3 × 6), and then remove the MB-639 board to the direction of the arrow.

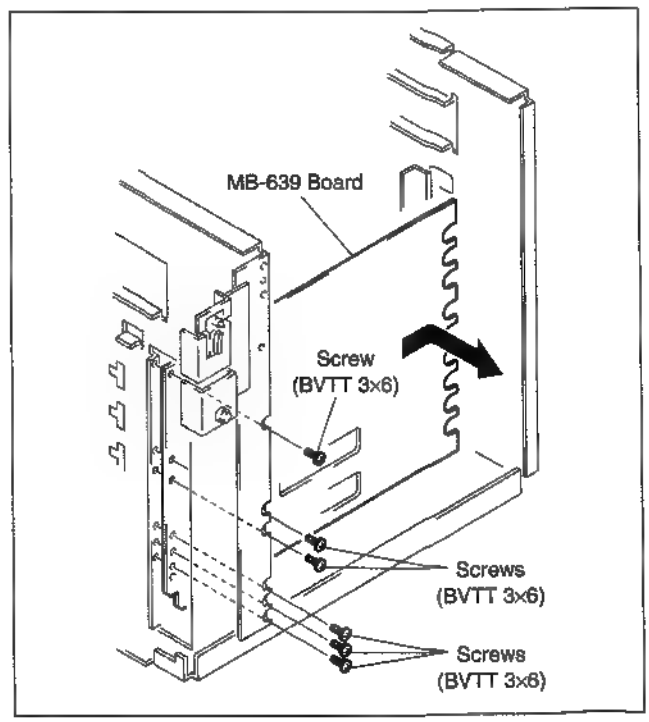

2-7-8. PC Main Board Replacement/ Adjustment

[How to replace]

Note: In the event of failure on the PC main board, be sure to replace the board on which the parts are mounted.

① Remove the top panel. (Refer to section 2-6.)
② Disconnect the nine connectors on the PC main board.

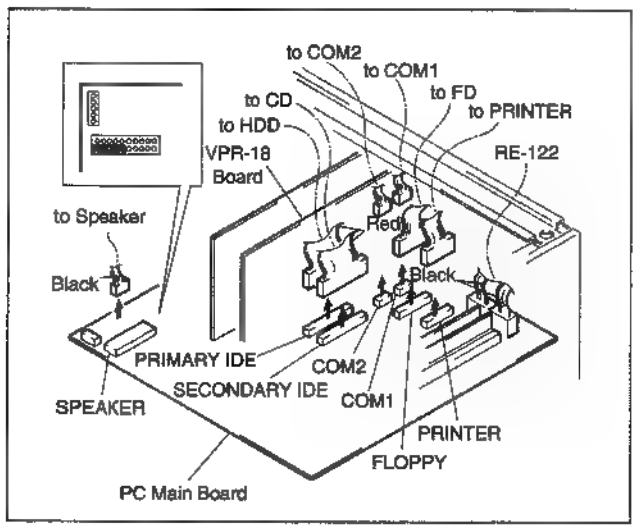

③ Remove the screw (B 3 × 4) from the bracket, and then remove the VPR-18 board. Remove the VGA board and BF-54 board, ESBK-7051 or ESBK-7052 (these ESBK are the optional boards.) from the PC main board.

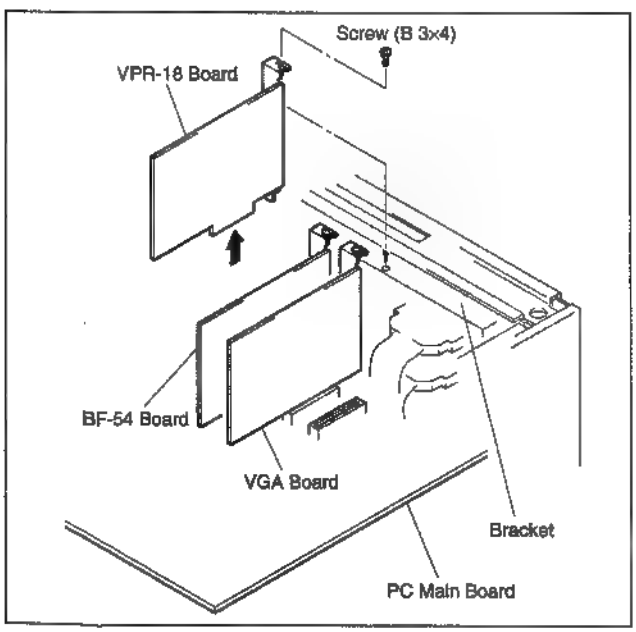

④ Remove the nine screws (BVTT 3 × 6), and then remove the PC main board.

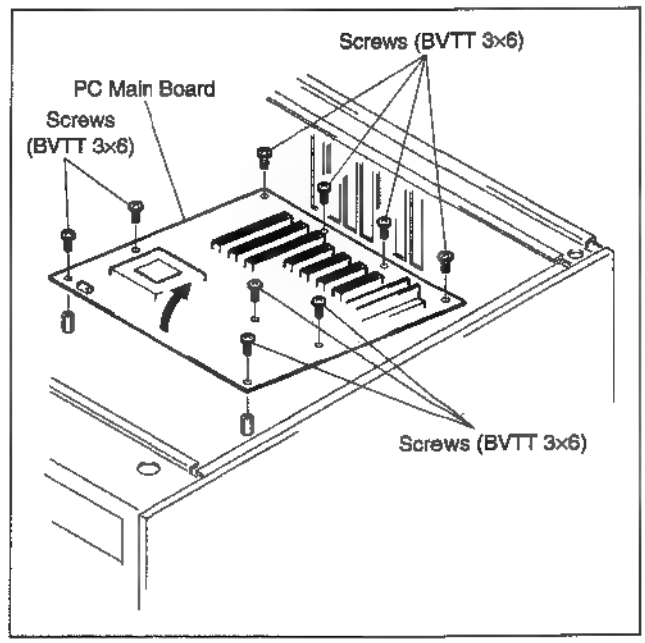

[JUMPER]

Confirm that jumpers are set to the following position.

① 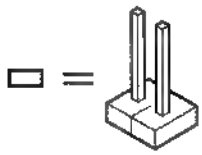

② 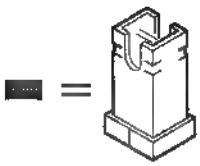

③ 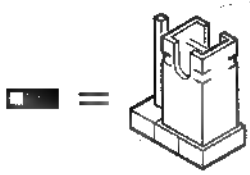

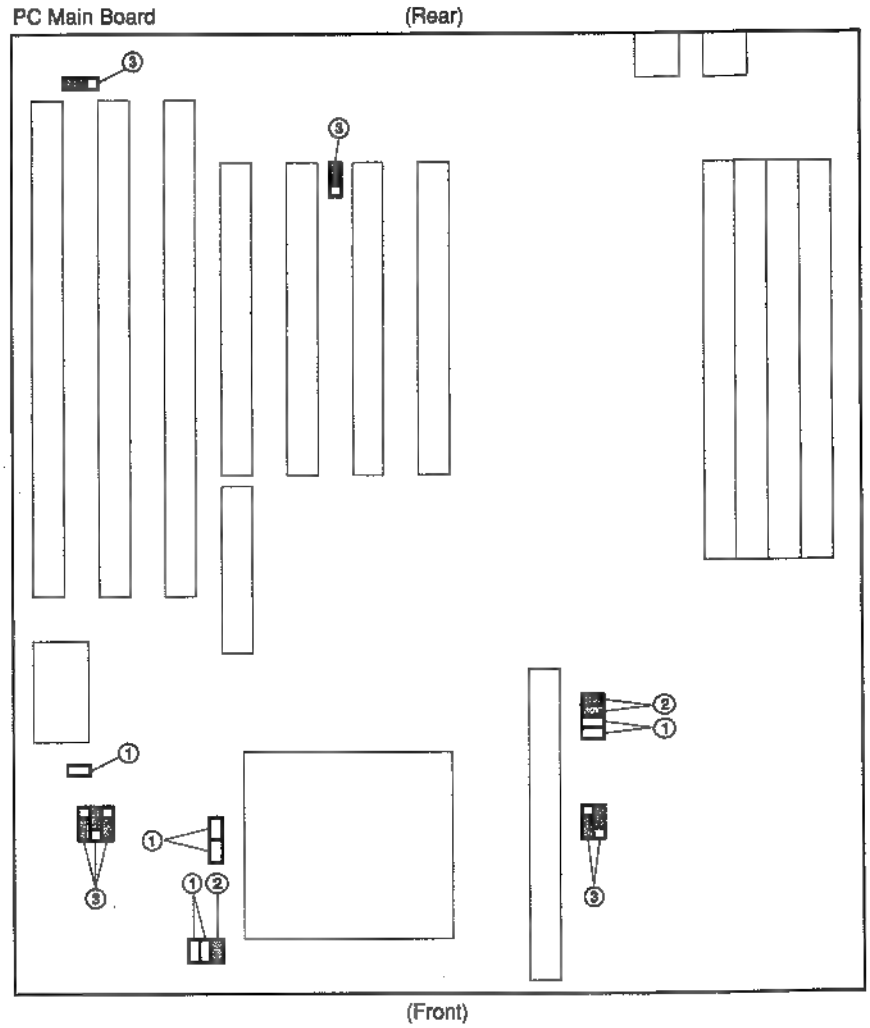

[How to perform adjustment after replacing]

1. After the PC main board is installed, turn on the power.
2. After the message which is "Press DEL to enter SETUP...." is displayed, press the DEL key. Then, SETUP items are displayed. (Operate this step quickly because the message is displayed for ■ short period of time.)
   SETUP
   * When the display is started up, the above message may not displayed and the selection message of starting up WINDOWS NT may be displayed.
   When the selection message is displayed, start up again.

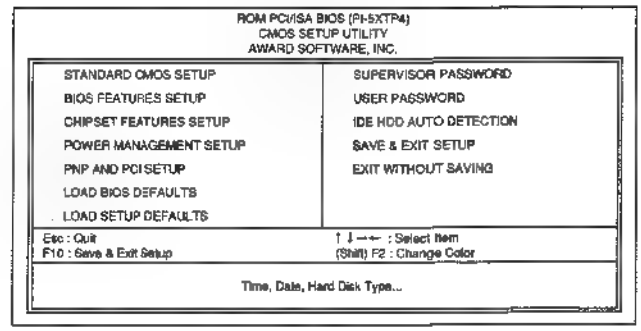

In case of Starting up again

- The selection message of starting up WINDOWS NT may be displayed after the message which is "Press DEL to enter SETUP ...." is disappeared.
  In the above case, while the selection message is displayed (about 30 seconds), turn off the power. Then, start up again.

Display 1

- When the WINDOWS NT display has been started up, shut down this unit. Then, start up again.

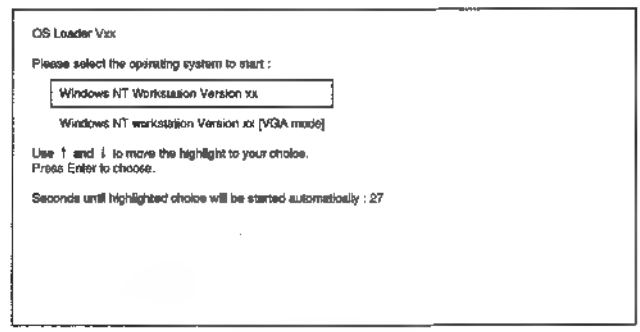

3. Shift the hollow pointer to LOAD BIOS DEFAULTS of which the items are displayed on the monitor with the arrow keys.

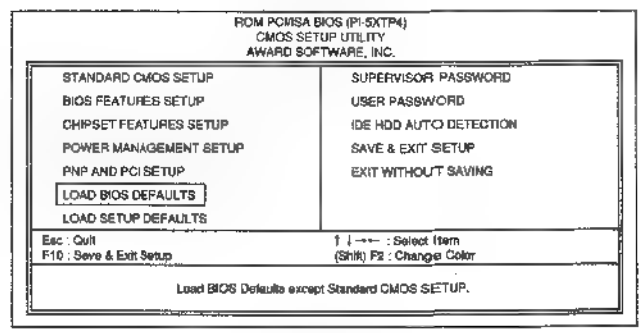

4. Press the ENTER key.
   To press the ENTER key, the message for selecting execution is displayed.
   Input "Y", and then press the ENTER key.

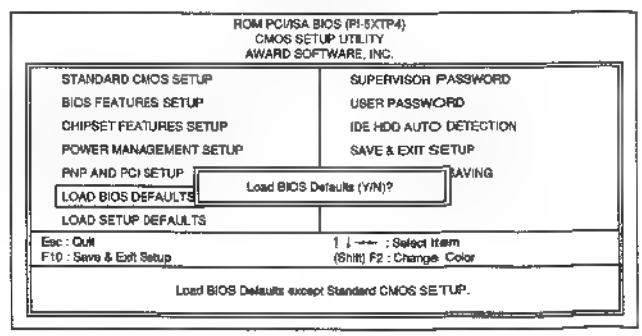

5. Shift the hollow pointer to LOAD SETUP DEFAULTS of which the items are displayed on the monitor with the arrow key.

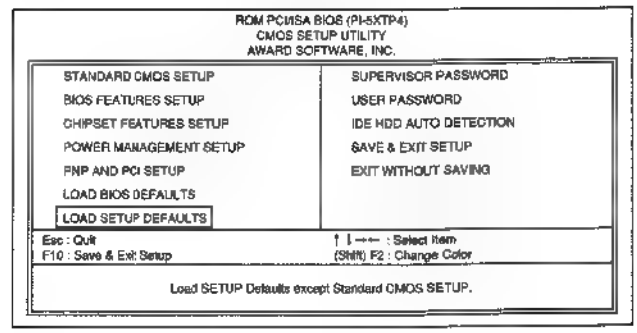

6. Press the ENTER key.
   To press the ENTER key, the message for selecting execution is displayed.
   Input "Y", and then press the ENTER key.

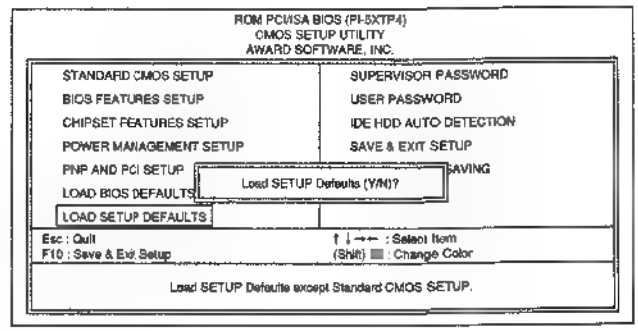

7. Shift the hollow pointer to BIOS FEATURES SETUP of which the items are displayed on the monitor with the arrow key.

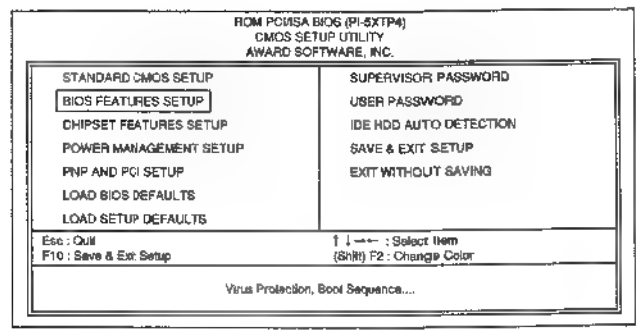

8. Press the ENTER key.
   To press the ENTER key, BIOS FEATURES SETUP is selected. The contents of BIOS FEATURES SETUP are displayed.
   Press the + or - key, then correct the following items.
   Boot Sequence → A, C
   Boot Up Floppy Seek → Enabled
   IDE 32-bit Transfer Mode → Disabled

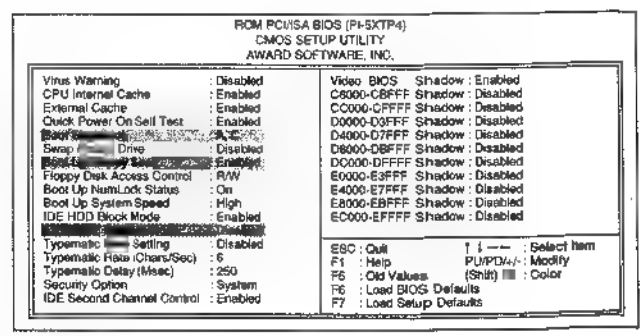

9. Press the ESC key, then the display is returned to the SETUP items.
   * It is not necessary to correct CHIPSET FEATURES SETUP.

10. Shift the hollow pointer to POWER MANAGEMENT SETUP of which the items are displayed on the monitor with the arrow key.

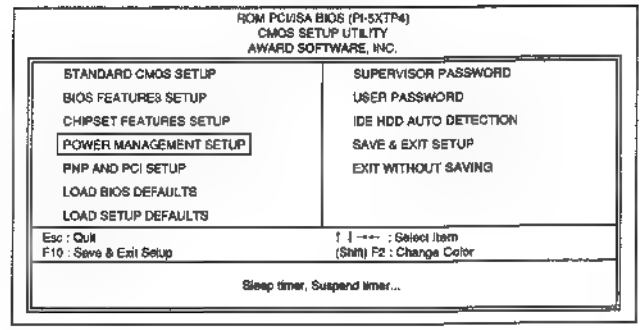

11. Press the ENTER key.
    To press the ENTER key, POWER MANAGEMENT SETUP is selected. The contents of POWER MANAGEMENT SETUP are displayed.
    Press the + or - key, then correct the following items.
    Power Management → Disable
    Video Off Option → Always On
    Suspend Switch → Disable

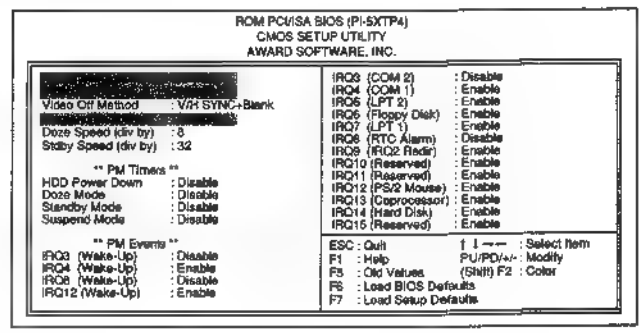

12. Press the ESC key, then the display is returned to the SETUP items.

13. Shift the hollow pointer to PNP AND PCI SETUP of which the items are displayed on the monitor with the arrow key.

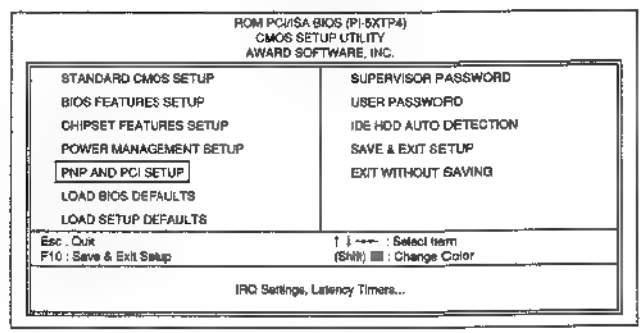

14. Press the ENTER key.
    To press the ENTER key, PNP AND PCI SETUP is selected. The contents of PNP AND PCI SETUP are displayed.
    Press the + or - key, then correct the following items.
    Slot 1 (RIGHT) IRQ → NA
    Slot 2 IRQ → NA
    Slot 3 IRQ → NA
    Slot 4 (LEFT) IRQ → NA
    IRQ 5 Used By ISA → Yes
    IRQ 9 Used By ISA → Yes
    IRQ 10 Used By ISA → Yes

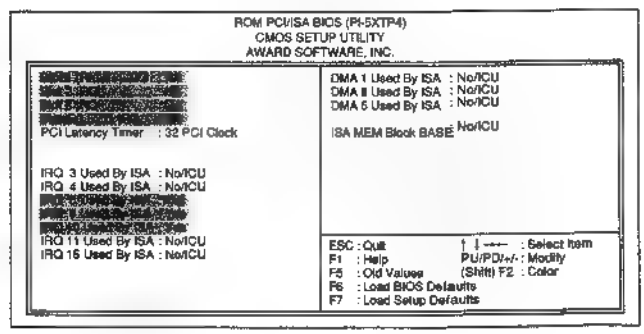

15. Press the ESC key, then the display is returned to the SETUP items.

16. Shift the hollow pointer to IDE HDD AUTO DETECTION of which the items are displayed on the monitor with the arrow key.

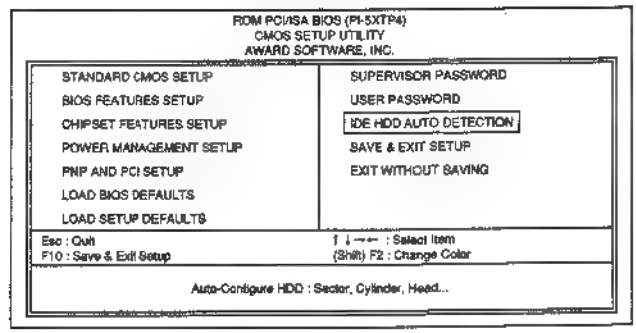

17. Press the ENTER key.

To press the ENTER key, IDE HDD AUTO DETECTION is selected. The contents of IDE HDD AUTO DETECTION are displayed.

Select 2(Y) to Primary Master, and then press the ENTER key.

Press the ESC key to skip Primary Slave, Secondary Master and Secondary Slave, and then the display of SETUP items is returned.

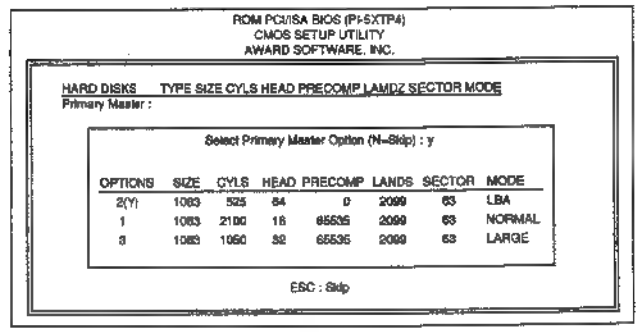

18. Shift the hollow pointer to STANDARD CMOS SETUP of which the items are displayed on the monitor with the arrow key.

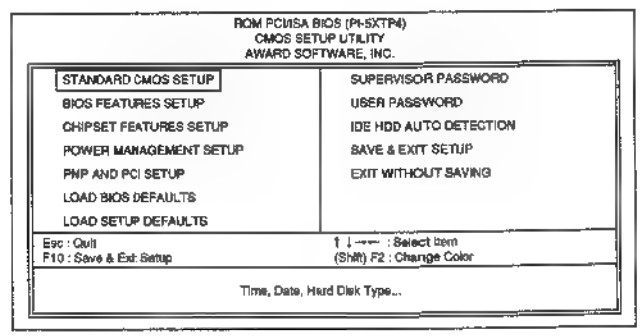

19. Press the ENTER key.
    To press the ENTER key, STANDARD CMOS SETUP is selected. The contents of STANDARD CMOS SETUP are displayed.
    Press the + or - key, then correct the following items.
    Date
    Time
    Drive A → 1.44M, 3.5 in.
    Drive B → None
    3 Mode → Disabled
    Halt On → All Errors

    Confirm the following items.
    Primary Master → User 1083 525 64 0 2099 63 LBA
    Primary Slave → None 0 0....
    Secondary Master → None 0 0....
    Secondary Slave → None 0 0....

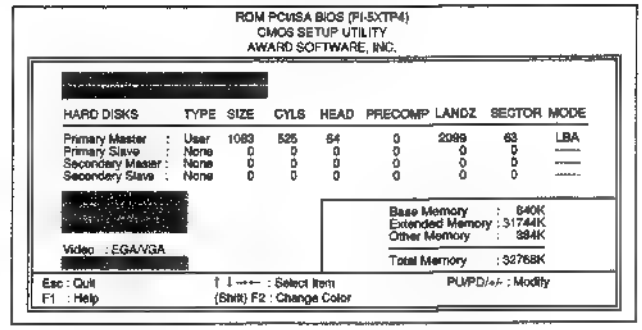

20. Press the ESC key, then the display is returned to the SETUP items.

21. Shift the hollow pointer to SAVE & EXIT SETUP of which the items are displayed on the monitor with the arrow key.

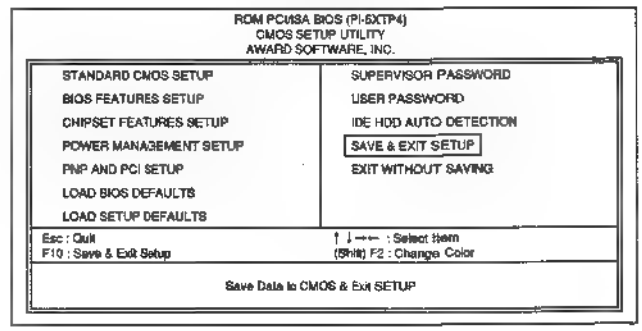

22. Press the ENTER key.
    To press the ENTER key, the message for selecting execution is displayed.
    Input "Y", and then press the ENTER key.

23. The display is changed to the starting up of the WINDOWS NT.

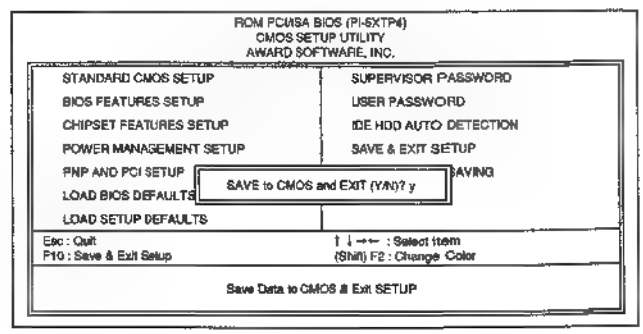

2-7-9. Flash Memory Replacement

Follow the procedure below to upgrade the flash memory version loaded on the SY-219 board.
Sony part number : 8-759-377-81
Type designation : MBM29F400BA-12
Address : H-2

<Version upgrade procedure>

① Insert the operating system (Sony part number: 3-603-505-01) containing the version upgrade data into the CD-ROM drive.
② Start up WINDOWS-NT, open the File Manager in the Main menu under the Program Manager, and activate C:¥ES-7¥SERVICE¥ALLStart.bat.
③ Next, activate C: ¥ES-7¥SERVICE¥LDSYROM.EXE.
④ Check that "Flash Memory" is selected for Memory and then choose "Browse".

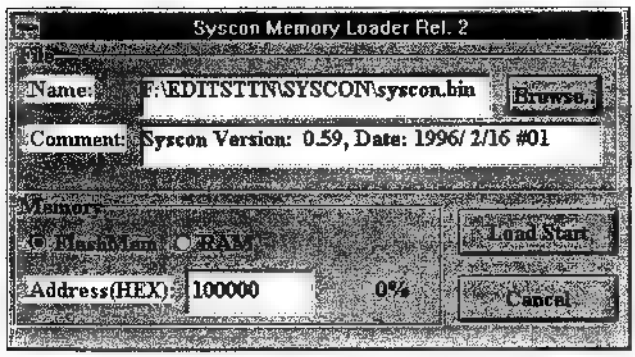

⑤ Select the Drive and Directory, and then choose, File.
⑥ Select OK or click on, File.
⑦ Check that the version has been changed, and then choose "Load Start".
⑧ The Load screen is shown until the program ends.
⑨ Push the reset switch for the SY-219 board (S3, the hole between the RECORDER and AUX connectors on the rear panel) or shut down the system and turn the power off.
⑩ Start up WINDOWS-NT, and check that the system controller is functioning properly by reactivating AllStart.bat and then activating C:¥ES-7¥SERVICE¥IDCHECK.EXE or VERSION.EXE

<Program writing procedure after exchanging flash memory>

① Once the system is shut down and the power is turned off, remove the SY-219 board and set "1,2" of the DIP switch (S1) to OFF.
② Carry out the same procedure under Steps 2 to 7 of the version upgrade procedure.
③ Once the system is shut down and the power is turned off, set the "1,2" of the DIP switch (S1) on the SY-219 board to ON.
④ Start up WINDOWS-NT, open the File Manager in the Main menu under the Program Manager, and activate C:¥ES-7¥SERVICE¥ALLStart.bat
⑤ Next, check that the system controller is functioning properly by activating C:¥ES-7¥SERVICE¥IDCHECK.EXE or VERSION.EXE

2-7-10. Lithium Battery Replacement

The MPU-95 board of the ESBK-7041, disc recorder board has a lithium battery.
The battery is mounted on IC128 (address: G-4), which is prepared for ■ power failure.
When starting up the edit manager, the message which the battery runs down is displayed. Then, replace the battery. (The battery has an estimated life of about six years.)
Sony part number: 1-528-749-11
Typedesignation : M4Z28BR00SH1

2-8. Notes on Spare Parts

2-8-1. Notes on Spare Parts

(1) Safety Related Components Warning

Components marked with ⚠ on the schematic diagrams, exploded views and electrical spare parts list are critical to safe operation. Replace these components with Sony parts whose part numbers appear in this manual or in service bulletins and service manual supplemanets published by Sony.

(2) Standardization of Parts

Spare parts supplied from Sony Parts Center may not always be identical with the parts actually in use due to accomodating the improved parts and/or engineering changes or standardization of genuine parts.

This manual's exploded views and electrical spare parts list indicate the part numbers of the standardized genuine parts at preset.

(3) Stock of Part

Parts marked with "o" in the SP(Supply code) column of the spare parts list are not normally required for routine service work. Orders for parts marked with "o" will be processed, but allow for additional time for delivery.

(4) Units for Capacitors, Inductors and Resisotors

The following units may be assumed in shcematic diagrams, electrical parts list and exploded views unless otherwise specified.

Capacitor : μF
Inductor : μH
Resistor :

2-8-2. Replacement of Chip Parts

Required Tools

Soldering iron : 20W
If possible, use a soldering-iron tip heatcontroller set to 270 ± 10 °C.
Braided wire : Solder Taul or equivalent
Sony part No. 7-641-300-81
Solder : 0.6mm dia. is recommended.
Tweezers

Soldering Conditions

Soldering iron temperature : 270 ± 10 °C
Soldering time : Less than 2 seconds per pin

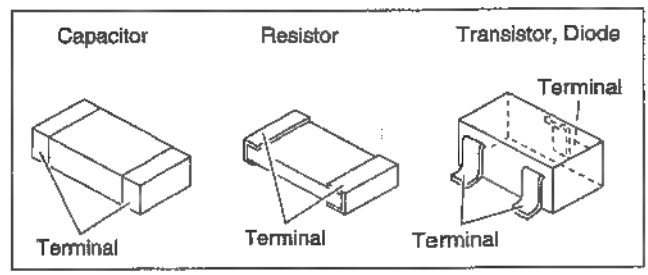

Replacement of Resistor and Capacitor

1. Place the soldering-iron tip onto the chip part and heat it up until the solder is melted. When the solder is melted, slide the chip part aside.
2. Make sure that there is no pattern peeling, damagae and/or bridge around the desoldering position.
3. After removing the chip part, presolder the area, in which the new chip part is to be place, with a thin layer of solder.
4. Place new chip part in the desired positon and solder both ends.

NOTE: Do not use a chip part again once it has been removed.

Replacement of Transistors and Diodes

1. Cut the terminals of the chip part with nippers.
2. Remove the cut leads with soldering iro as above.
3. Make sure that there is no peeling, damage and/or bridge around the desoldering positons.
4. After removing the chip part, presolder the area, in wich the new chip part is to be placed, with ∎ thin layer of solder.
5. Place new chip part in the desired position and solder the terminals.

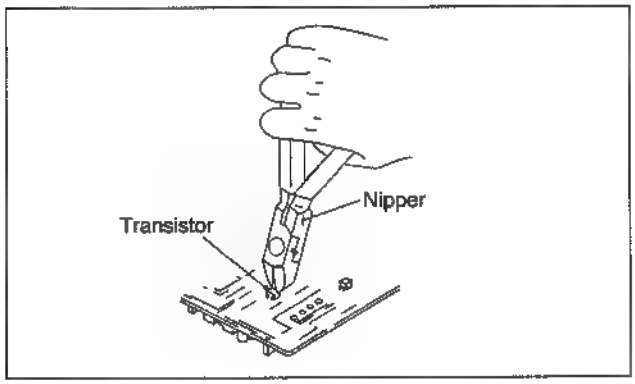

Replacement of ICs

1. Using the braided wire, "SOLDER TAUL"(Sony Part No. 7-641-300-81), remove the solder around the pins of the IC-chip to be removed.
2. While heating up the pins, remove the pins one by one using sharp-pointed tweezers.
3. Make sure that there is no pattern peeling, damage and/ or bridge around the desoldering position.
4. After removing the chip part, presolder the area, in which the new chip part is to be placed, with ∎ thin layer of solder.
5. Place new chip part in the desired position and solder the pins.

2-8-3. Removal of PLCC IC

PLCC socket Extraction Tool

(Sony Part No. J-6035-070-A)

This extraction tool is useful for extracting the IC(PLCC type) inserted into an IC socket, and fits all sizes of ICs from 20 pins through 124 pins.

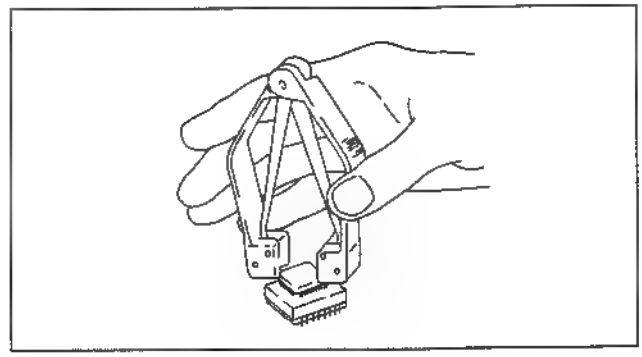

NOTE: Do not try to pull chip carrier out of socket and let the tool action pull it out. Do not squeeze harder than necessary, only enough that the tool action occurs.

<How to use the Extraction Tool>

1. Spread or compress the tool legs so the tongs will fit into the slots of the chip carrier socket.

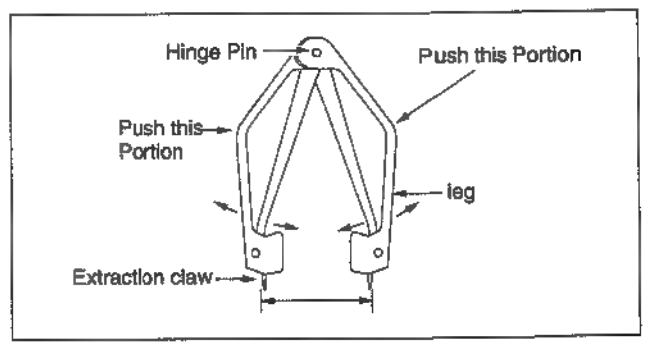

2. Insert the tool tongs into the slots of the carrier socket. Push fully in so that the tool butts on the socket at "A".

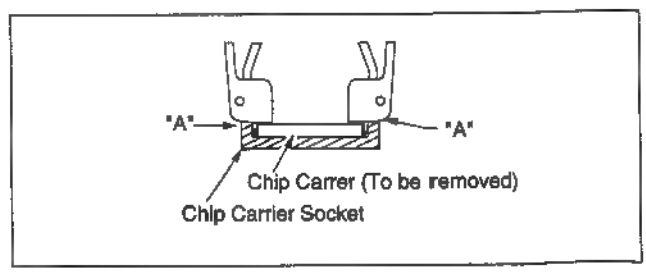

3. Place the thumb and the first and second finger on the ribbed area of the tool. Maintain a small downwartd force to keep the tool butted on the socket.
   Squeeze the thumb and finger together so that the tool legs tend to straighten. This action will draw the chip carrier out of the socket and grip it within the tool legs. Maintain the squeezing action so as to hold the chip in the tool, hold the tool over your other hand and relax the squeeze. The chip will fall out of the tool and into your hand.

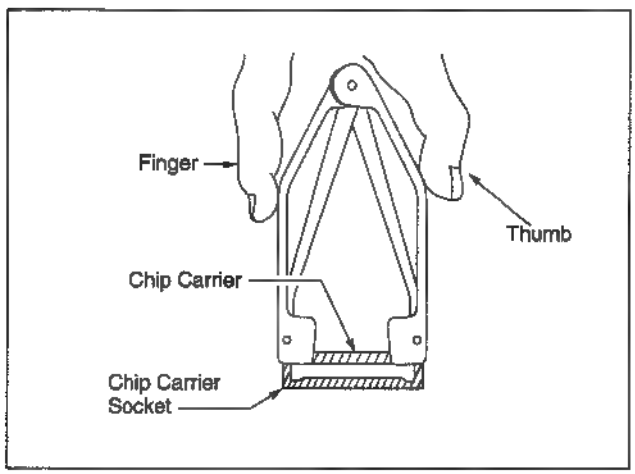

2-8-4. Power Supplied Cord for CE

Power Cord : 1-590-910-11

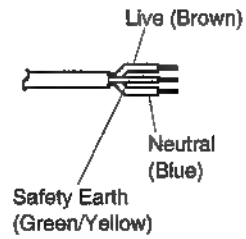

SECTION 3
DIAGNOSIS FUNCTION

3-1. OVERVIEW

Using the diagnosis function installed in the EditStation, the information such as hardware configuration, software version on the block basis installed in the EditStasion can be displayed on a CRT screen. And also, results of the self-diagnosis which is performed on each board at the time of system start-up can be displayed.
In addition, manual or automatic diagnosis on the total system or the block basis is possible to be performed.

3-2. FUNCTIONS

The diagnosis provides following functions:

- Displays the system configuration diagram.
- Displays diagnosis information on the board basis.
    - PC board
    - Graphics board
    - Video In/Out board
    - System Controller board
    - Switcher/DME board
    - Disk Recorder board
    - Digital I/O board
    - Audio/Mixer board
- Displays devices with connected to the system, and checks their operating status
    - Control Panel
    - VTR etc.
- System Diagnosis
    - Displays, saves into files, and prints out the results of diagnosis

3-3. DIAGNOSIS PROCEDURES

3-3-1. Start-up/End of Diagnosis Program (SelfDiag)

Double click the SelfDiag icon on the EditStation window of Program Manager, and SelfDiag program is started up. When the program is started up, the window with indicating EditStation configuration diagram is opened.
The configuration diagram consists of two diagrams; that is "Basic Configuration" and "Optional Configuration" diagrams. The optional board(s) with installed is indicated with black characters. The optional board(s) without installed is indicated by characters with hatching.

To end the program, click the Exit button on the SelfDiag window.

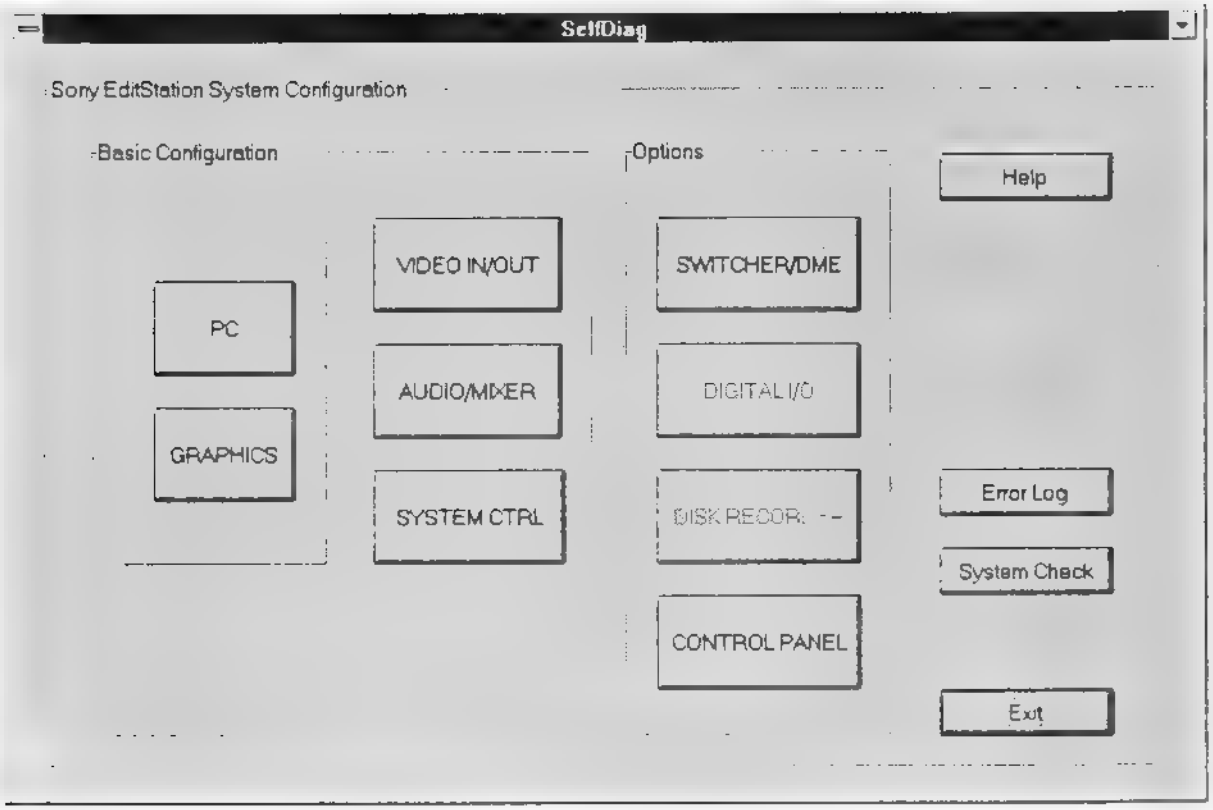

For the boards installed in the EditStation, information about the following boards can be displayed:

Basic configuration
- PC board
- Graphics board
- Video I/O board
- Audio Mixer board
- System Controller board

Optional configuration
- Switcher/DME board
- Digital I/O board
- Disk Recorder board
- Control Panel

To display information about any board or to check status of any board, click the icon corresponding to the board

To perform total test of the system, click the System Check button on the SelfDiag window.
The system executes checking the total system in a pre-arranged order, then the test result is displayed on a CRT screen as well as the test result is saved into a file.
Clicking the Error Log button on the SelfDiag window causes to display the results of tests executed by that time. It is also possible to print the results out.

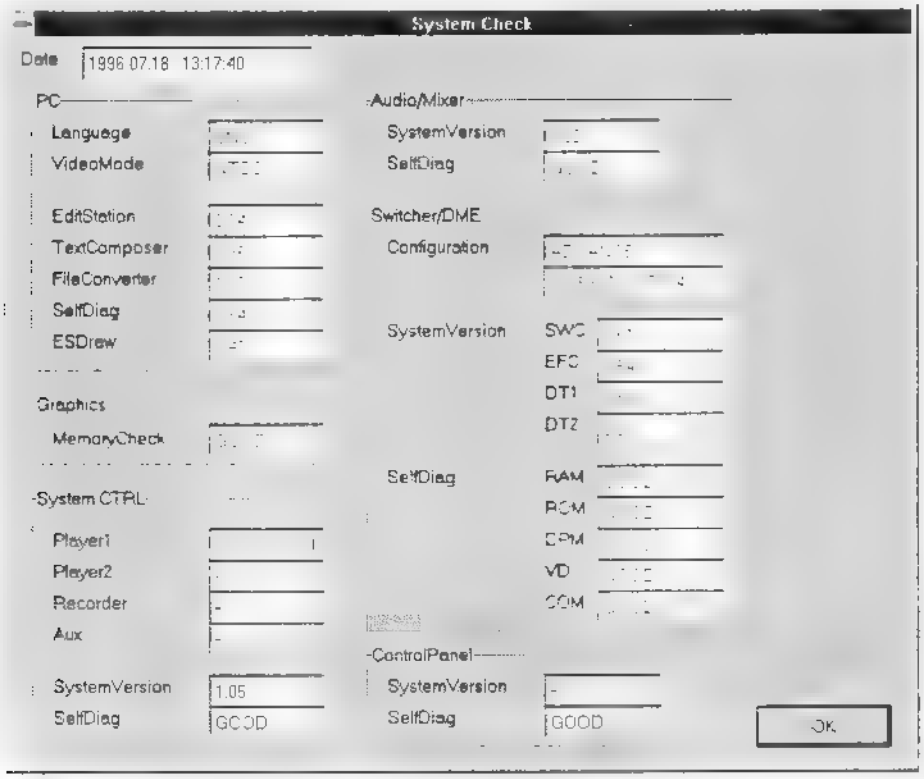

For explanations of the SelfDiag window, click the HELP button on the SelfDiag window. The Help Topics: Self Diagnostics Software Online Manual is displayed on a CRT screen.

3-3-2. Diagnosis on the Block Basis

(1) PC

Click the PC block icon on the SelfDiag window, and the window with indicating setup information about hardware and software on the PC board is opened
The following information about hardware and software is displayed on the PC Information window.

Hardware

- Hardware information
  - Hardware information about PC unit
- Memory information
  - Memory size and memory usage status
- Video information
  - VGA card information

Software

- OS information
  - Information about Windows NT
- Driver information
  - Information about driver software version
- Application information
  - Information about the application version

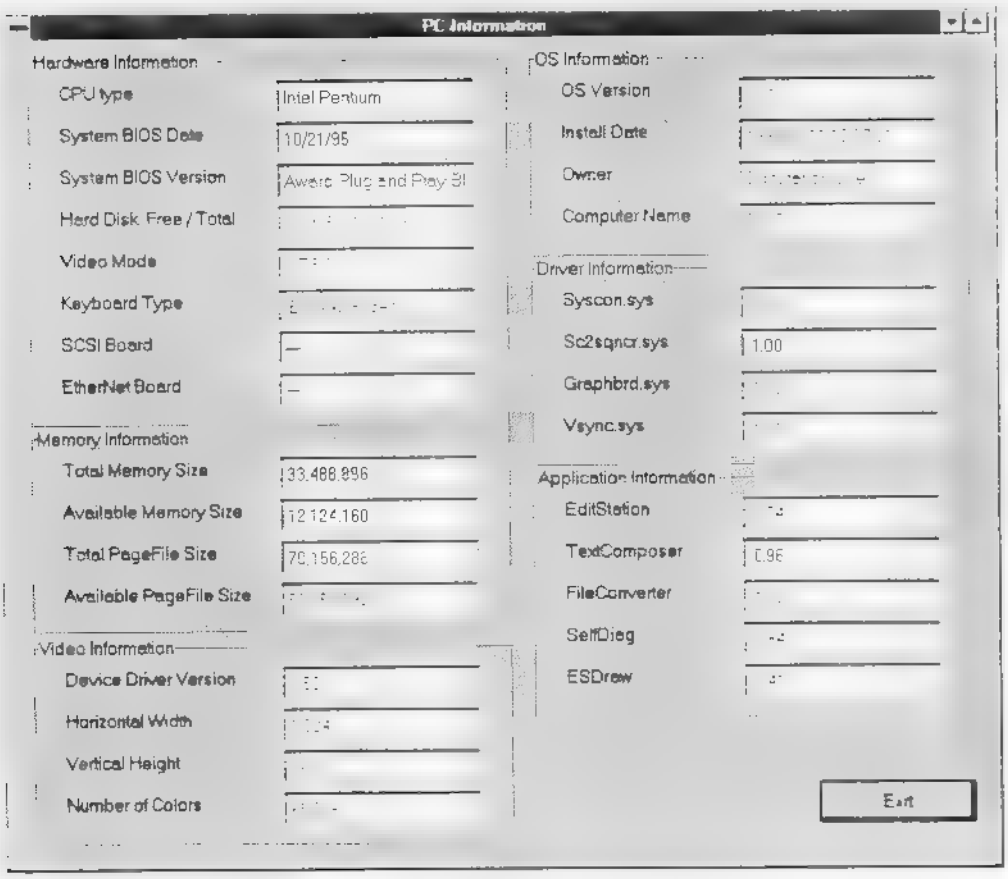

To close the PC Information window, click the Exit button on the PC Information window.

(2) GRAPHICS

Click the GRAPHICS block icon on the SelfDiag window, and the window with checking graphics board is opened.
Check items are as listed below. Click the item icon which is required to check on the Graphics window.

Read/Write from/to memories
Displays graphics data.
Scroll/Crawl
Capture

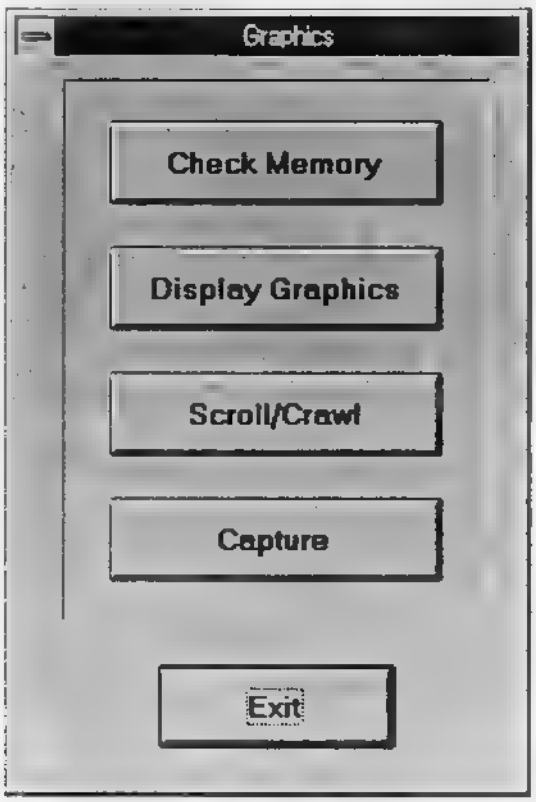

To close the Graphics window, click the Exit button on the Graphics window.

●Check Memory button

Clicking the Check Memory button on the Graphics window causes the system to perform checking the memory on the graphics board. The memory is checked for a capacity of 4 MB in NTSC system, and for 6 MB in PAL system.

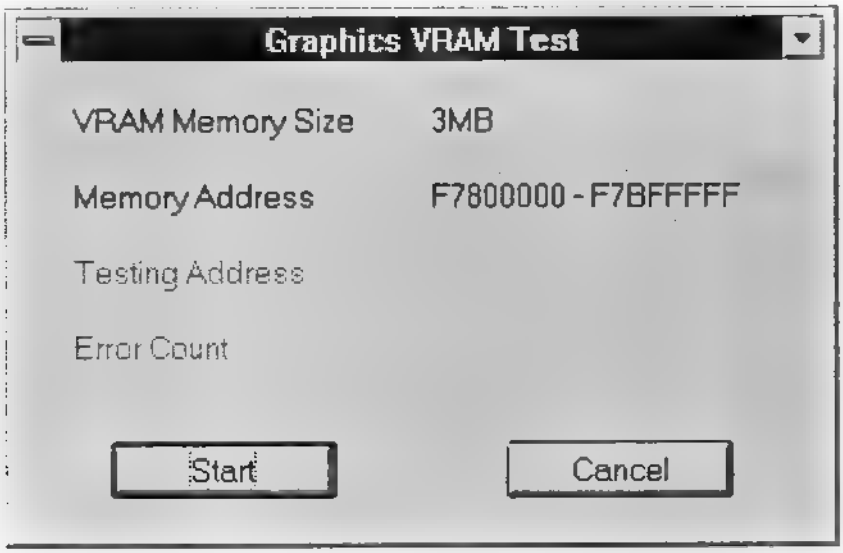

Memory size and memory addresses are displayed. Clicking the [Start] button on the Graphics VRAM Test window causes the system to start Read/Write checking of the specified memory size. When an error occurs during the checking, Error Count increments. Clicking the [Cancel] button on the Graphics VRAM Test window causes the system to stop checking the memory.

When the memory is completed to be checked, the result is displayed. To re-start checking the memory, click the [Retry] button on the Graphics VRAM Test window. To close the Graphics VRAM Test window, click the [Exit] button on the Graphics VRAM Test window.

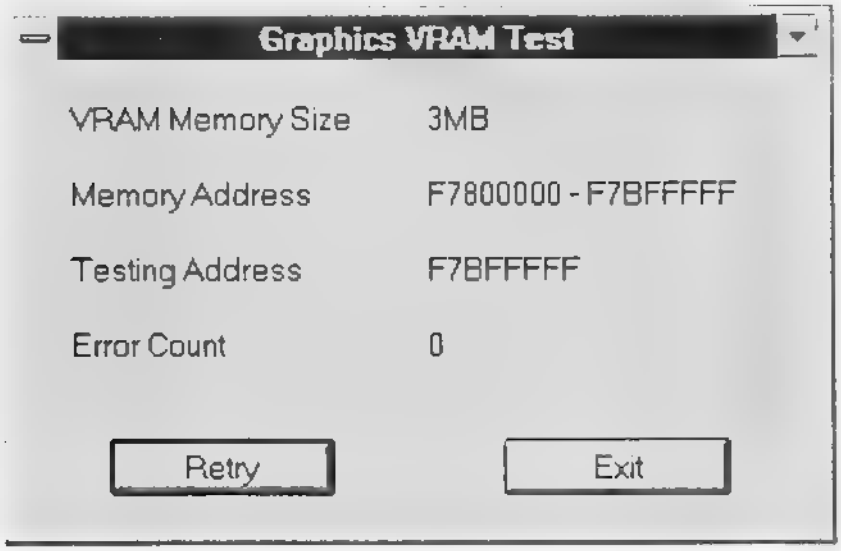

●Display Graphics button

Clicking the Display Graphics button on the Graphics window causes the system to read graphics data and to display the data on a video monitor.

A dialog box is opened for reading a file. Select any file from the dialog box.

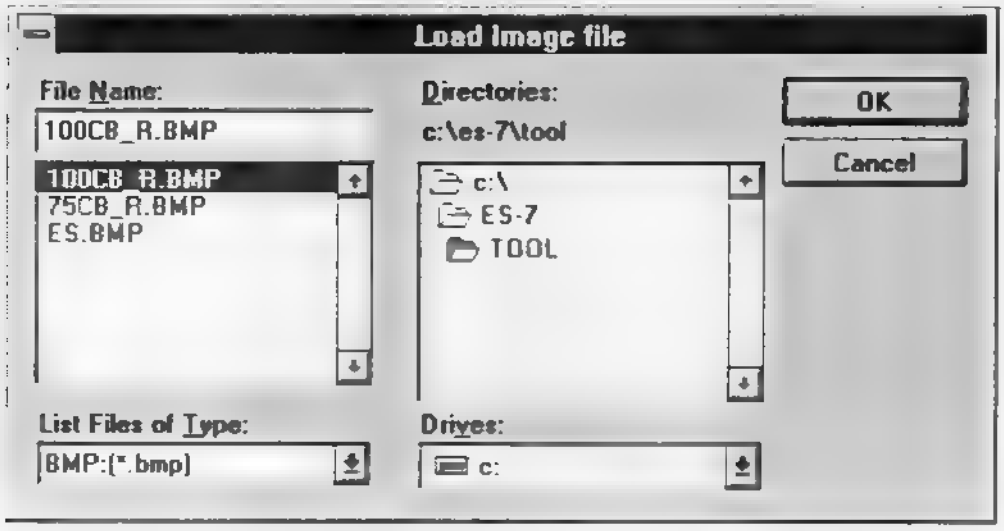

●Scroll/Crawl button

[illegible] beforehand, scrolling (up/down) and/or crawling (left/right) of window is performed by clicking the Start button on the Scroll/Crawl Test window.

[illegible] is displayed in scrolling and/or crawling. The Exit button on the Scroll/Crawl [illegible] the Cancel button [illegible] and/or crawling, click the Cancel button.

[illegible] Test window, click the Exit button on the Scroll/Crawl Test window.

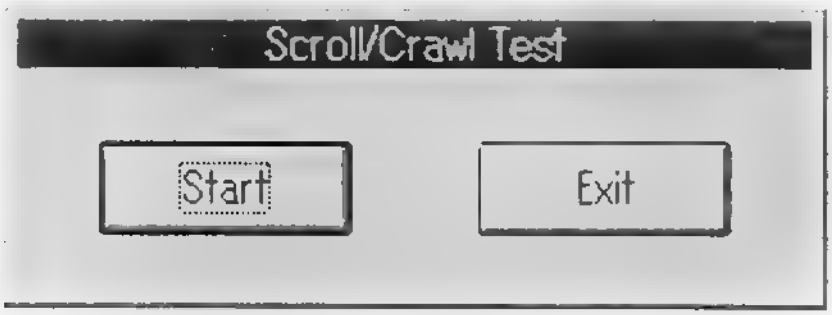

●Capture button

Clicking the Capture button on the Graphics window causes the system to capture the input source with selected currently. Two screen sizes are available to be selected : one is "Fixed", and the other is "Full Screen".

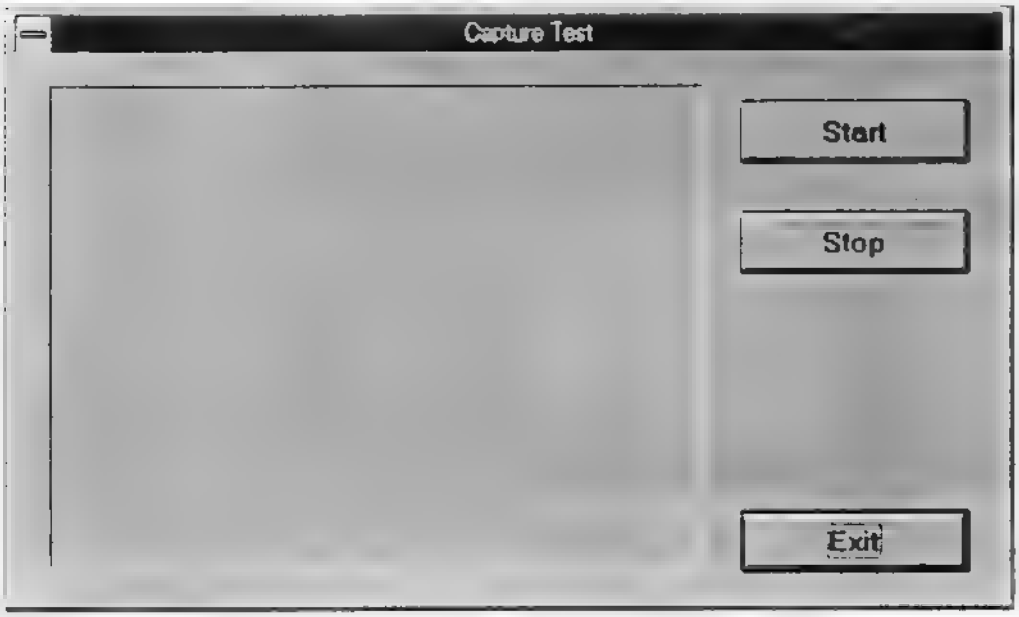

Clicking the Start button on the Capture Test window causes the system to start capture operation. When capture operation is started, the system displays the following capture screen, and menu command is also changed

Clicking the Full button on the Capture Test window causes the system to start capturing the selected input source in Full Screen size. To return to the state before starting Full Screen capture operation, click the mouse or press any key on a keyboard

Clicking the Stop button on the Capture Test window causes the system to stop the capture operation. To close the Capture Test window, click the Exit button on the Capture Test window.

(3) VIDEO IN/OUT

Click the VIDEO IN/OUT block icon on the SelfDiag window, and the window for checking VIDEO board is opened.

From the window, it is possible to switch between the following check categories and to perform checking the operation.

Input/output sources, signals
Effect patterns
Key signals

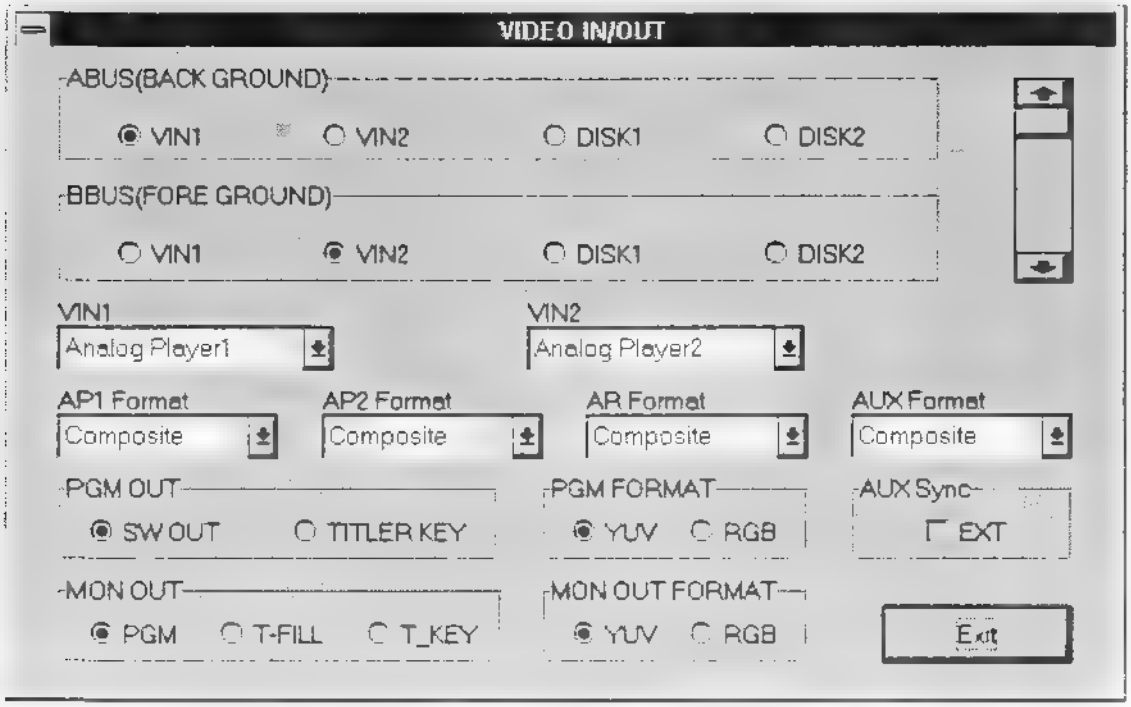

To close the VIDEO IN/OUT window, click the Exit button or the VIDEO IN/OUT [illegible]

[Description of Commands in the Window]

A-BUS — Selects the video input to BackGround BUS

B-BUS — Selects the video input to ForeGround BUS

VIN1 — Selects the video signal to Input 1 of Switcher
- Analog Player1
- Analog Player2
- Analog Recorder
- Analog Auxiliary
- Digital Player1
- Digital Player2
- Digital Recorder
- Digital Auxiliary

VIN2 — Selects the video signal to Input 2 of Switcher
- Analog Player1
- Analog Player2
- Analog Recorder
- Analog Auxiliary

Digital Player1
Digital Player2
Digital Recorder
Digital Auxiliary

AP1 Format — Selects the video signal format of Analog Player1.
Composite
S-Video
Component (Y/U/V)

AP2 Format — Selects the video signal format of Analog Player2.
Composite
S-Video
Component (Y/U/V)

AR Format — Selects the video signal format of Analog Recorder.
Composite
S-Video
Component (Y/U/V)

AUX Format — Selects the video signal format of Analog Auxiliary.
Composite
Y/U/V
R/G/B

AUX Sync — When selected RGB format for video signal of Analog Auxiliary, selects whether to use Ext Sync In. or not.
Int Sync — Uses Sync on G signal.
Ext Sync — Uses Ext Sync In.

PGM OUT — Selects the video signal of PGM OUT
Switcher Out
Titler Key Out

PGM Format — Selects the video signal format of PGM OUT (Component out)
Y/U/V
R/G/B

MON OUT — Selects the video signal of Monitor Out (Component Out)
PGM Out
Titler Fill Out
Titler Key Out

MONOUT FORMAT — Select the video signal format of Monitor Out (Component Out).
Y/U/V
R/G/B

FADER BAR — Fader bar for transition between A-BUS and B-BUS by pressing ⬆ button or ⬇ button (CUT (No.1059) only).

(4) SYSTEM CONTROLLER

Click the SYSTEM CTRL block icon on the SelfDiag window, and the window with indicating information such as software version of the board, result of self-diagnosis, and devices connected to the system is opened
This window indicates what connector is currently connected to the SYSTEM-M connector. Select the connector, then click the TEST button on the SYSTEM CONTROLLER window. Status of the connected device is checked.

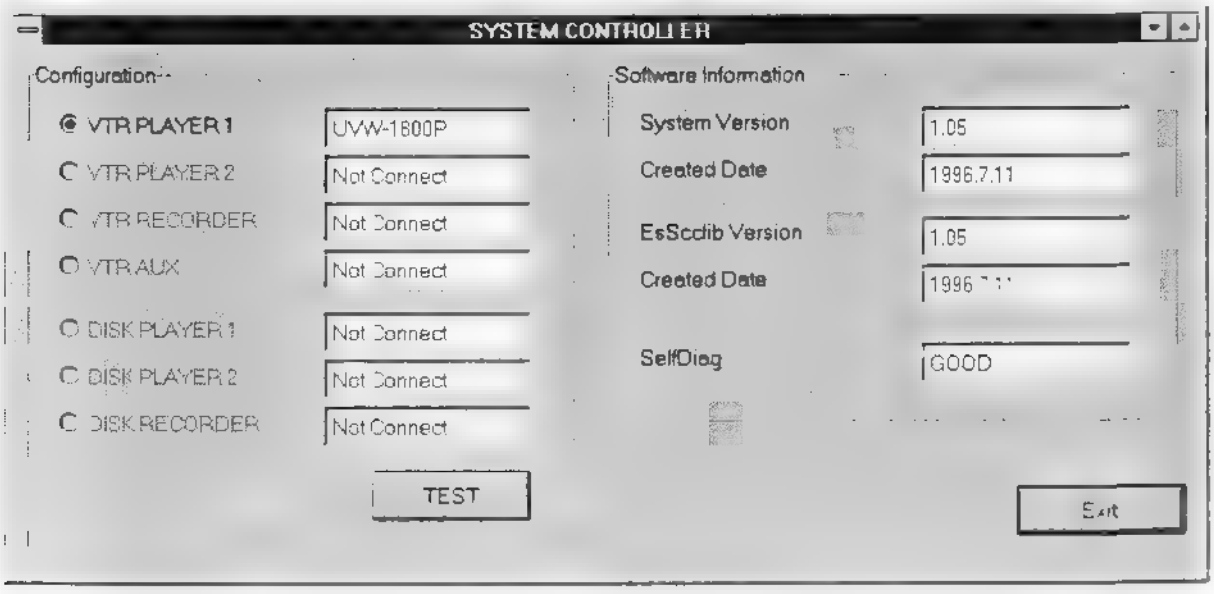

To close the SYSTEM CONTROLLER window, click the Exit button on the SYSTEM CONTROLLER window.

(5) AUDIO/MIXER

Click the AUDIO/MIXER block icon on the SelfDiag window, and the window with indicating information such as software version of the board, and result of self-diagnosis is opened. This window also can be used to perform checking the board.

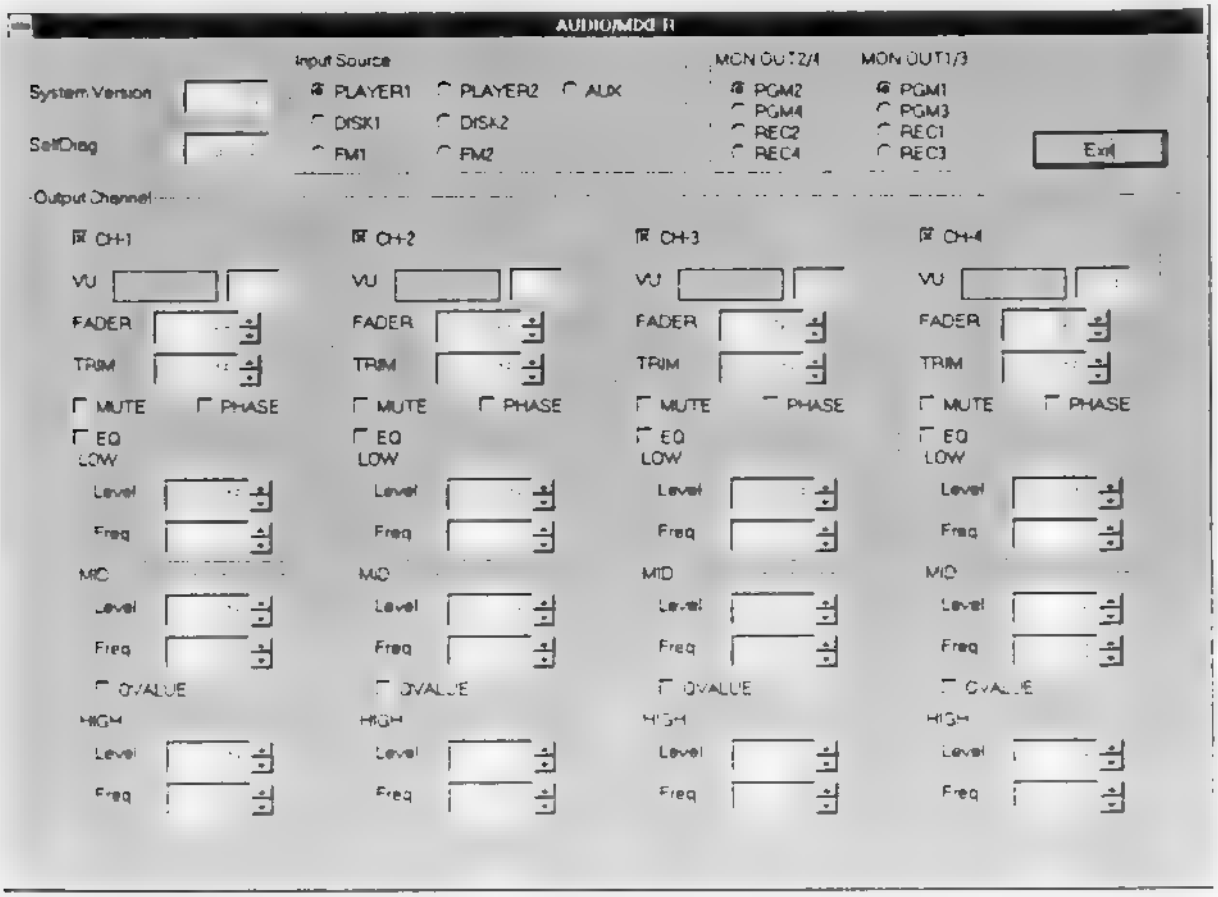

To close the AUDIO MIXER window, clicke the Exit button on the AUDIO MIXER board

[Description of Commands in the Window]

Input Source	Selects Input Source. PLAYER1 (4 Channel) PLAYER2 (4 Channel) AUX (2 Channel) DISK1 (4 Channel) DISK2 (4 Channel) FM1 (1 Channel) FM2 (1 Channel)
MON OUT2/4	Selects Monitor Out (2/4).
MON OUT1/3	Selects Monitor Out (1/3).

Output Channel

VU	Displays VU level (bar and value).
FADER	Sets up Fader level (0 to 1023).
TRIM	Sets up Trim level (0 to 15 to 30).
MUTE	Turns Mute function ON or OFF.
PHASE	Turns Phase function ON or OFF.
EQ	Turns Equalizer function ON or OFF. EQ => ON:LOW. MID. HIGH values became valid.
Level	Level value (0 to 15 to 30)
Freq:	Frequency (0 to 255)
QVALUE	Sets Qvalue ON or OFF (MID only).

(6) SWITCHER/DME

Click the SWITCHER/DME block icon on the SelfDiag window, and the window with indicating information such as software version of the board, result of self-diagnosis, and board configuration including options is opened.

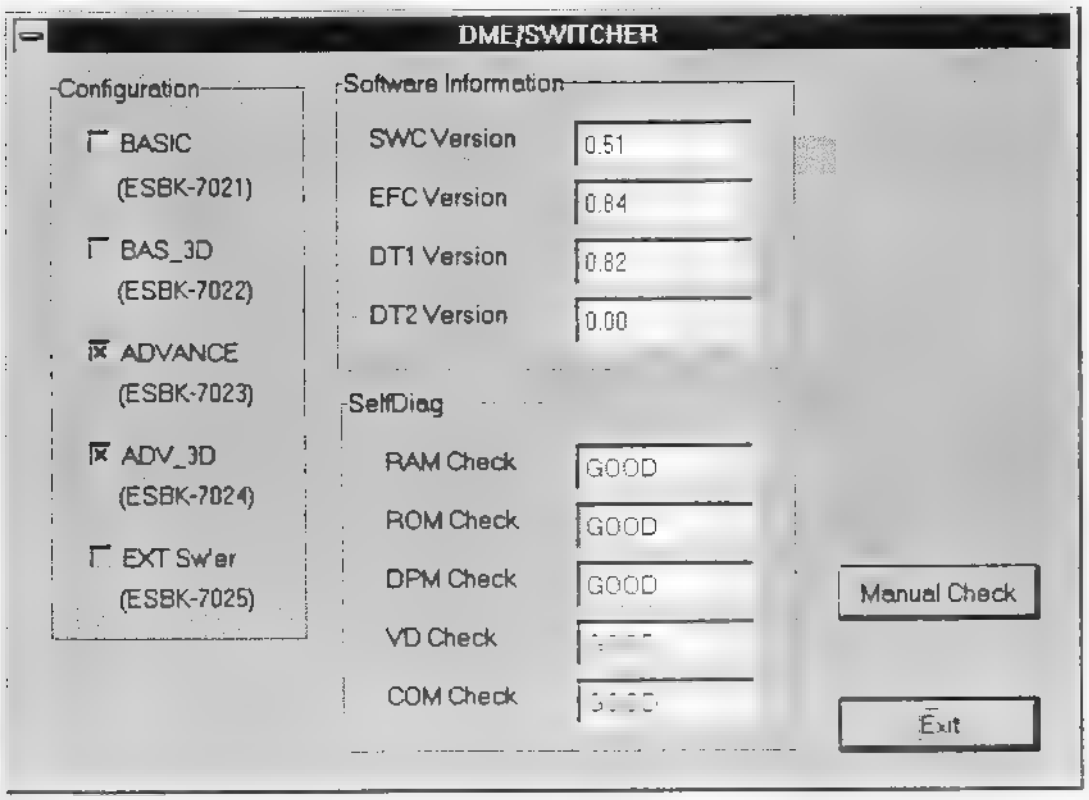

To close the DME/SWITCHER window, click the [Exit] button on the DME/SWITCHER window.

Clicking the Manual Check button on the DME/SWITHCER window causes the system to check the switcher board manually. From the window, it is possible to switch between the following check categories, and to confirm the board operation

Input/Output sources, signals

Effect patterns

Key signals

If a Control Panel was connected to the EditStation at the start of the checking, the system asks an operator whether to enable Fader Lever built in the check program or not.

To enable Fader Lever built in this check program, click the Yes button on the SelfDiag window. To disable Fader Lever built in the check program and to enable the fader lever located on the Control Panel, click the No button on the SelfDiag window.

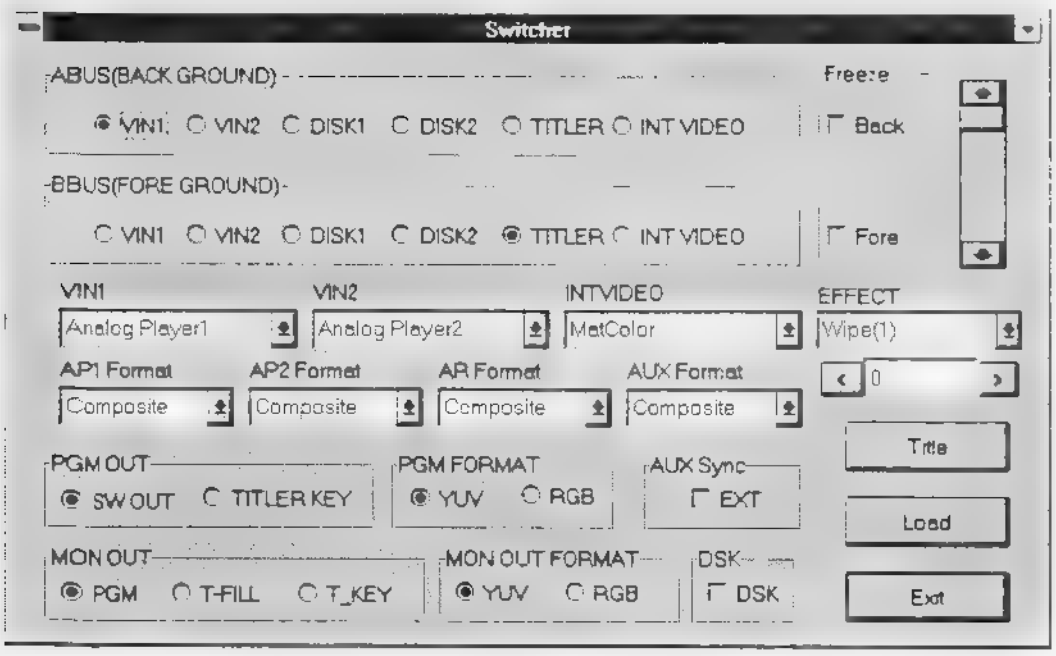

[Description of Commands in the Window]

A-BUS — Selects the video input on BackGround BUS.

B-BUS — Selects the video input on ForeGround BUS.

Freeze — Sets Video Freeze (Field) function of BackGround/ForeGround Bus ON or OFF.

VIN1 — Selects the video signal of Input 1 of the switcher.

- Analog Player1
- Analog Player2
- Analog Recorder
- Analog Auxiliary
- Digital Player1
- Digital Player2
- Digital Recorder
- Digital Auxiliary

VIN2 — Selects the video signal of Input 2 of the switcher.

- Analog Player1
- Analog Player2
- Analog Recorder
- Analog Auxiliary
- Digital Player1
- Digital Player2
- Digital Recorder
- Digital Auxiliary

INTVIDEO — Selects Internal Video.

- MatColor
- ColorBar
- Grid
- Black

AP1 Format — Selects the video signal format of Analog Player1.

- Composite
- S-Video
- Component (Y/U/V)

AP2 Format — Selects the video signal format of Analog Player2.

- Composite
- S-Video
- Component (Y/U/V)

AR Format — Selects the video signal format of Analog Recorder.

- Composite
- S-Video
- Component (Y/U/V)

AUX Format — Selects the video signal format of Auxiliary.

- Composite
- Y/U/V
- R/G/B

AUX Sync — When selected RGB format for Auxiliary video signal, selects whether to use Ext Sync In or not.

- Int Sync .... Uses Sync on G signal.
- Ext Sync ..... Uses Ext Sync In signal.

PGM OUT — Selects the video signal of PGM OUT.

- Switcher Out
- Titler Key Out

PGM Format — Selects the video signal format of PGM OUT (Component Out).

- Y/U/V
- R/G/B

MON OUT — Selects the video signal of Monitor Out (Component Out).

- PGM Out
- Titler Fill Out
- Titler Key Out

MONOUT FORMAT — Selects the video signal format of Monitor Out (Component Out).

- Y/U/V
- R/G/B

DSK — Turns DSK ON or OFF.

FADER BAR — Fader Bar for transition between A-BUS and B-BUS with an Effect by pressing ⬆ button or ⬇ button.
(When Control Panel was connected to the system, it is possible to disable this fader bar.)

EFFECT — Selects an Effect Pattern (a typical pattern per pattern category).
Effect No. corresponding to such Effect Pattern is indicated in a box located under the Effect Pattern.
It is also possible to select Effect Numbers

When setting to the Title mode (that is, cutting ForeGround video out with Key Source signal, and inserting characters or graphics onto BackGround video), click the [Title] button on the Switcher window, and the window with setting to various modes is opened.

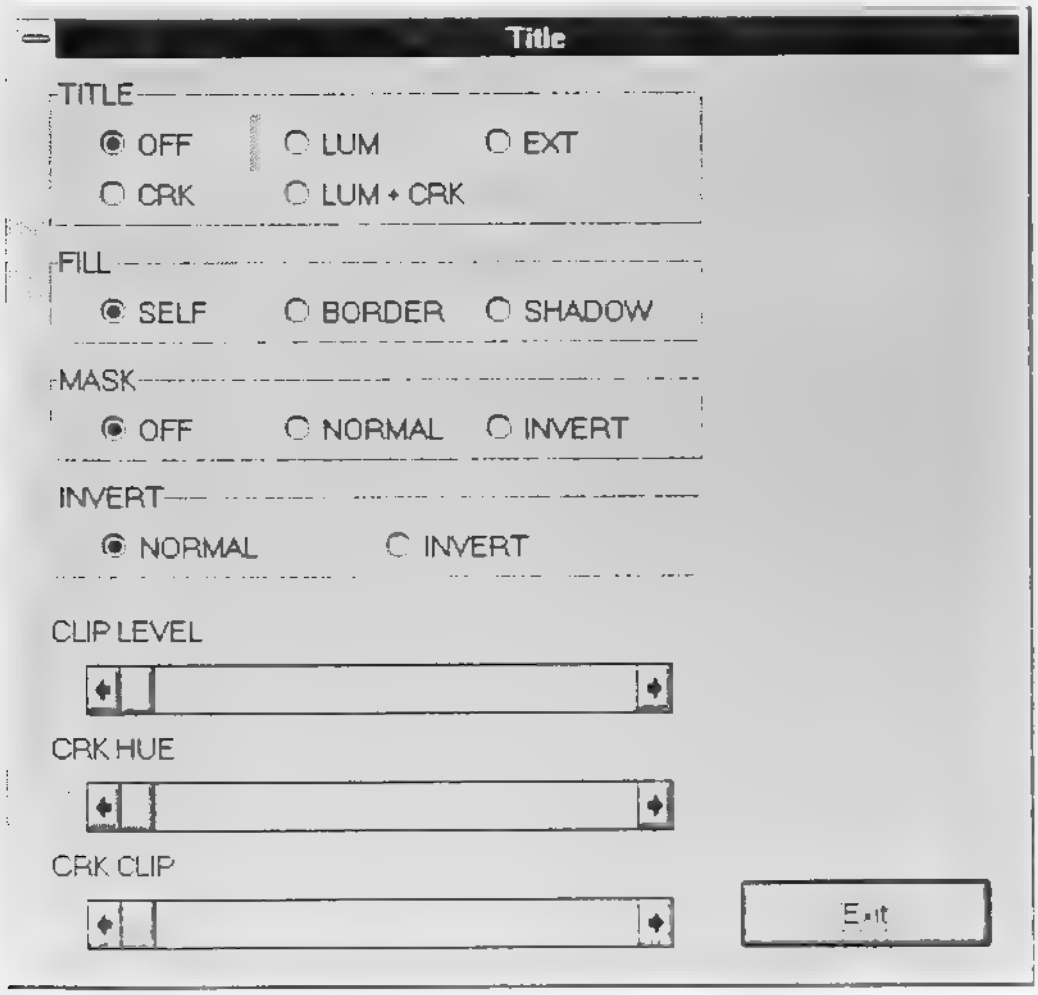

[Description of Commands in the Window]

TITLE — Selects Key Source signal for Title Key
- OFF ..... Disables Title key function.
- LUM — Luminance Key (keying is done in reference to luminance level of Key signal)
- EXT ..... — External Key (external key source is used)
- CRK ..... — Chromakey (keying is done in reference to specific hue in Key signal)
- LUM+CRK ... Luminance Key + Chromakey

FILL — Selects a signal to fill the hole cut out by Key Source signal
- SELF
- BORDER
- SHADOW

MASK — Sets up when to mask a part of the hole cut out by Key Source signal.
- ON
- NORMAL
- INVERT

INVERT — Sets up when to invert the polarity of Key Source signal
- NORMAL
- INVERT

Clip Level — Sets up Clip Level when Luminance Key is ON (00 to FFh)

CRK HUE — Sets up Hue for Chromakey (00 to FFh)

CRK Offset — Sets up Chromakey Offset (00 to FFh)

When reading graphics data, click the [Load] button on the Switcher window. A dialog box is opened for reading a file. Select a file from the dialog box.

By selecting TITLER on A-BUS/B-BUS or by turning DSK ON, it is possible to view the Graphics data on a video monitor.

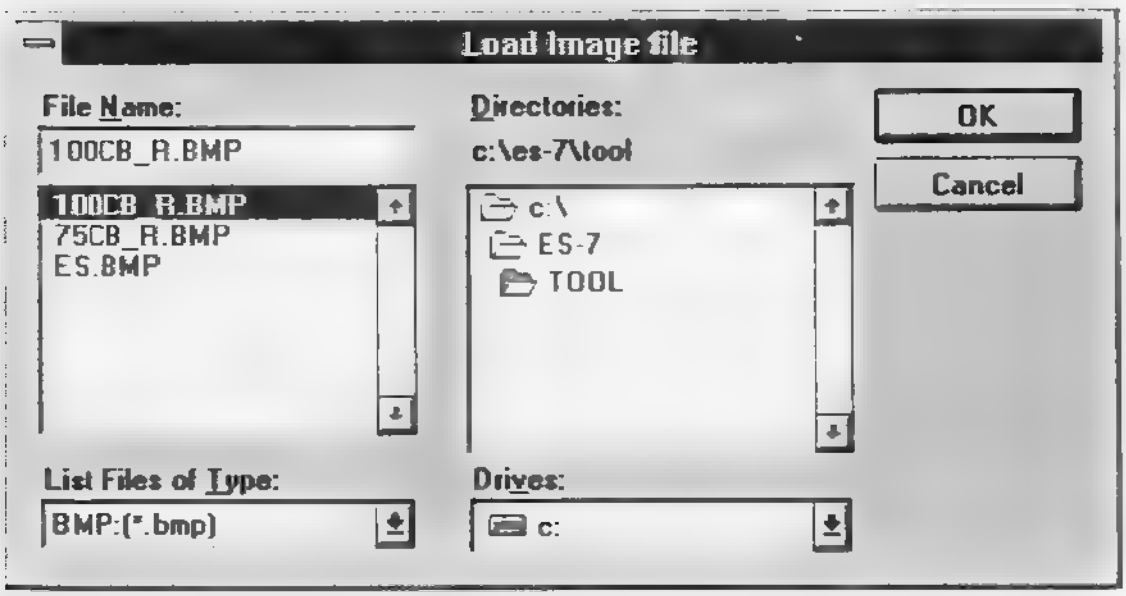

(7) CONTROL PANEL

Click the CONTROL PANEL block icon on the SelfDiag window, and the window with indicating information such as software version of CONTROL PANEL, and result of self-diagnosis is opened. The window is also used to check operation of various switches.

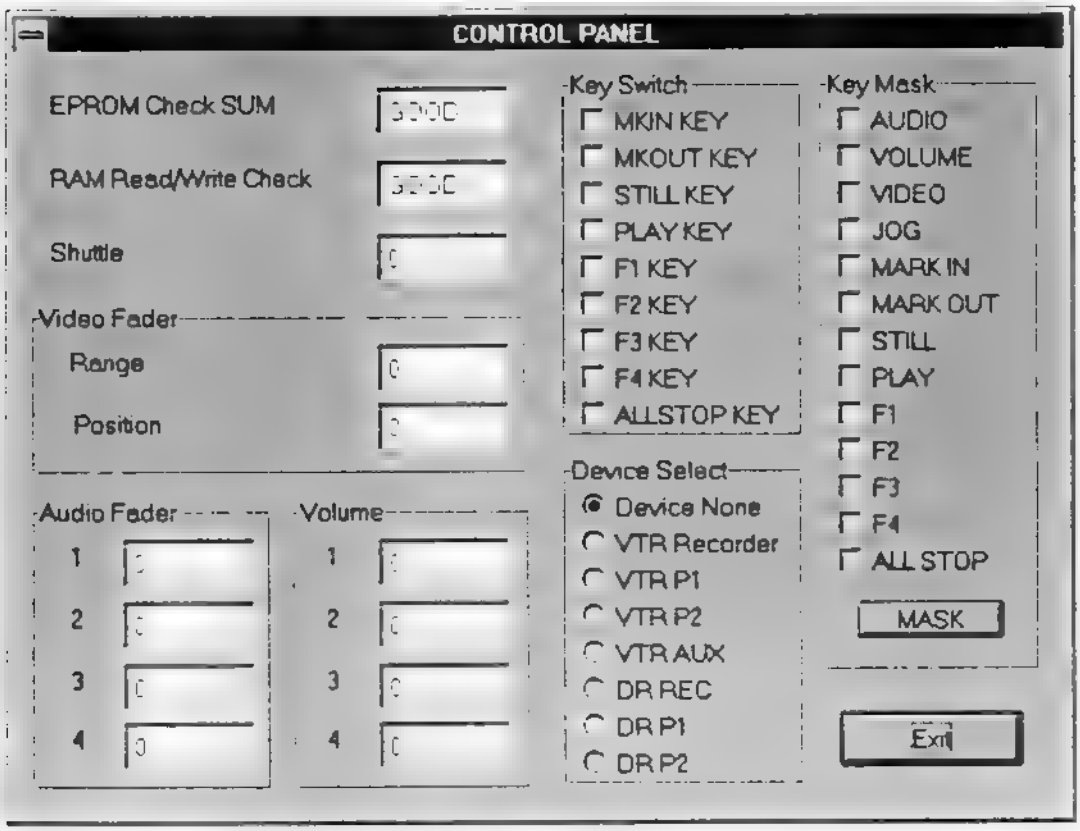

To close the CONTROL PANEL window, click the Exit button on the CONTROL PANEL window.

[Description of Commands in the Window]

Video Fader	Indicates the value of Transition Lever.
Audio Fader	Indicates the value of Slider Fader (1 to 4)
Volume	Indicates the value of volume control (1 to 4)
Jog/Shuttle	Indicates the value of Jog/Shuttle dial.

Key Switch	When pressed a key switch, it is marked. When released the key switch, the mark extinguishes.
Device Select	Selects VTRs to which Control Panel provides independent control.
Key Mask	Setup of Keying area to be disabled when performed control from Control Panel

SECTION 4
ELECTRICAL ALIGNMENT

4-1. ADJUSTMENT SEQUENCE

DA-95 Board Adjustment

- 4-2. ADJUSTMENT PREPARATIONS
- 4-3-1. GEN LOCK Adjustment
- 4-3-2. COMPONENT RGB MATRIX LEVEL BALANCE Adjustment
- 4-3-3. PROGRAM OUTPUT G GAIN Adjustment
- 4-3-4. PROGRAM OUTPUT R GAIN Adjustment
- 4-3-5. PROGRAM OUTPUT B GAIN Adjustment
- 4-3-6. PROGRAM OUTPUT COMPONENT Y GAIN Adjustment
- 4-3-7. PROGRAM OUTPUT COMPONENT R-Y GAIN Adjustment
- 4-3-8. PROGRAM OUTPUT COMPONENT B-Y GAIN Adjustment
- 4-3-9. Y/R-Y DELAY Adjustment
- 4-3-10. Y/B-Y DELAY Adjustment
- 4-3-11. COMPOSITE SC LEAK BALANCE Adjustment
- 4-3-12. COMPOSITE CHROMA GAIN Adjustment
- 4-3-13. COMPOSITE Y GAIN Check
- (A)

- (A)
- 4-3-14. COMPOSITE BURST GAIN Adjustment
- 4-3-15. INT SC PHASE Adjustment
- 4-3-16. EXT SC PHASE Adjustment
- 4-3-17. INT SC FREQUENCY Adjustment
- 4-3-18. S-VIDEO COMPONENT Y GAIN Check
- 4-3-19. S-VIDEO CHROMA GAIN Adjustment
- 4-3-20. EXT SC-H Adjustment (B B OUT)
- 4-3-21. INT SC-H Adjustment (B II OUT)
- 4-3-22. B B OUTPUT GAIN Adjustment
- 4-3-23. SYNC OUT LEVEL Adjustment

DAC-20 Board Adjustment

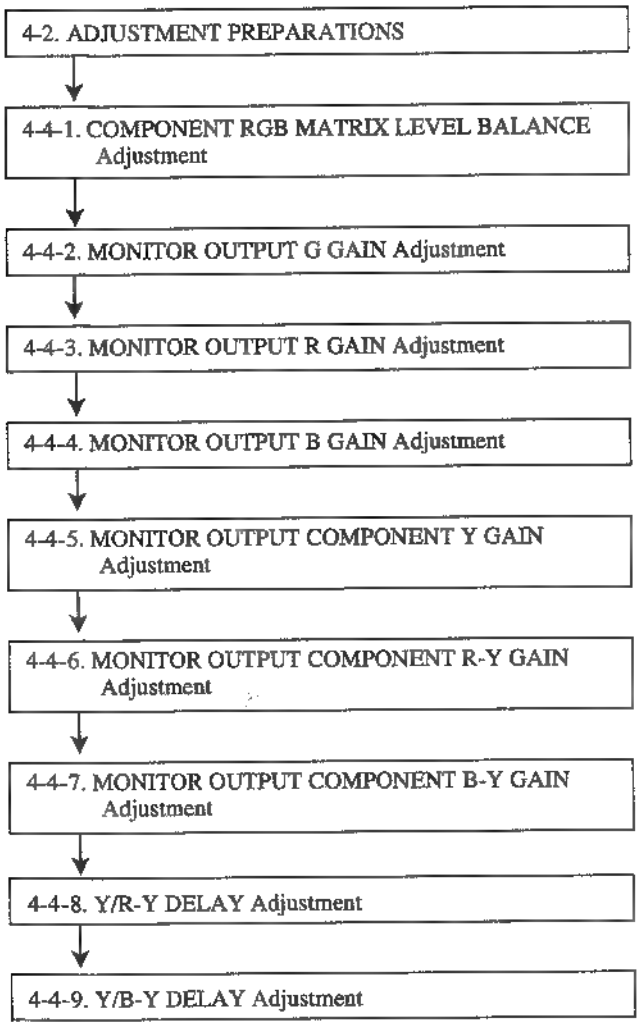

AD-115 Board Adjustment

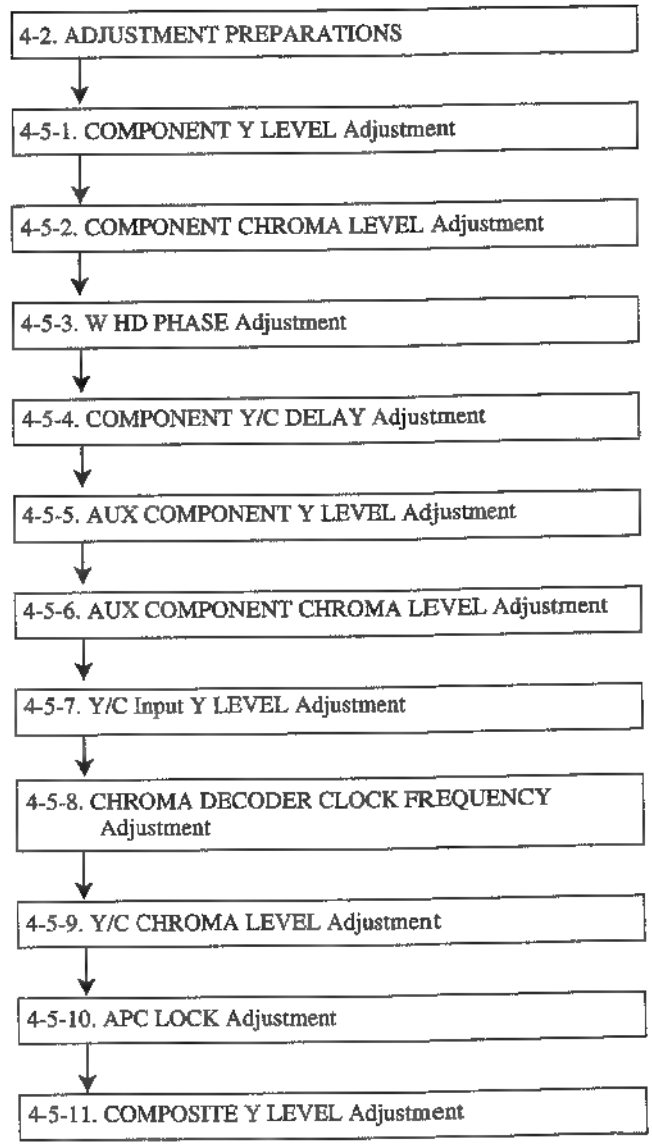

AU-217 Board Adjustment

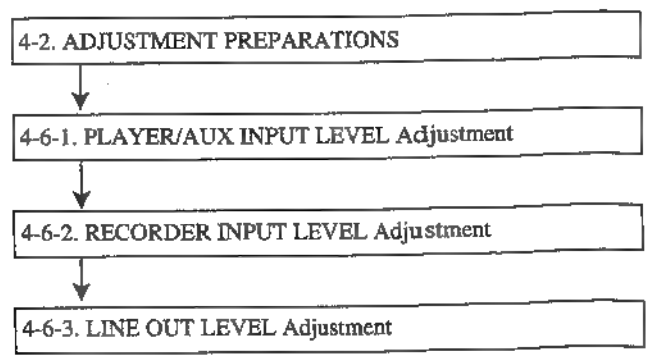

4-2. ADJUSTMENT PREPARATIONS

4-2-1. Connection

1. Connection in adjustment of DA-95/DAC-20/AD-115 board.
   Connect the equipments as follows;

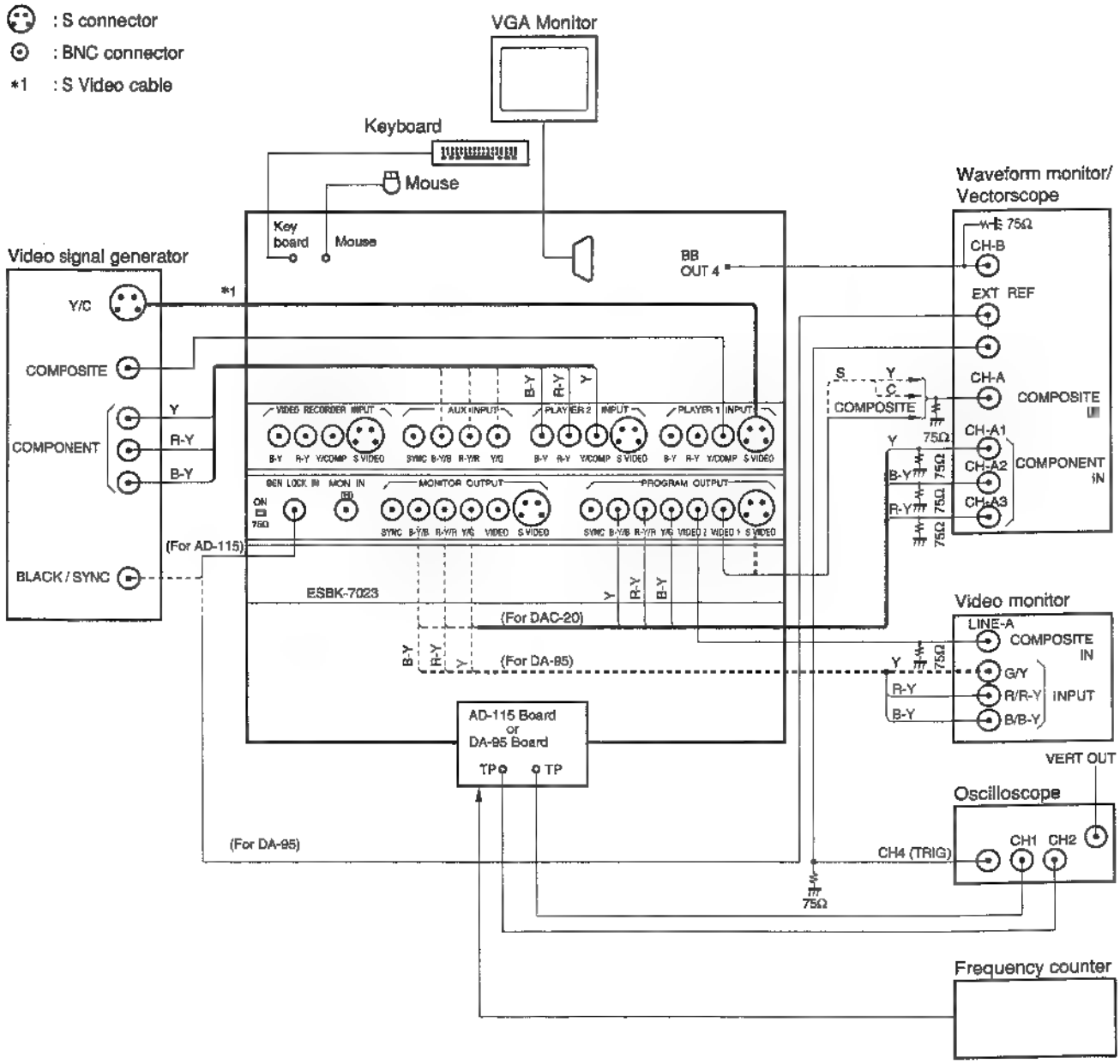

2. Connection in adjustment of AU-217 board.
   Connect the equipments as follows;

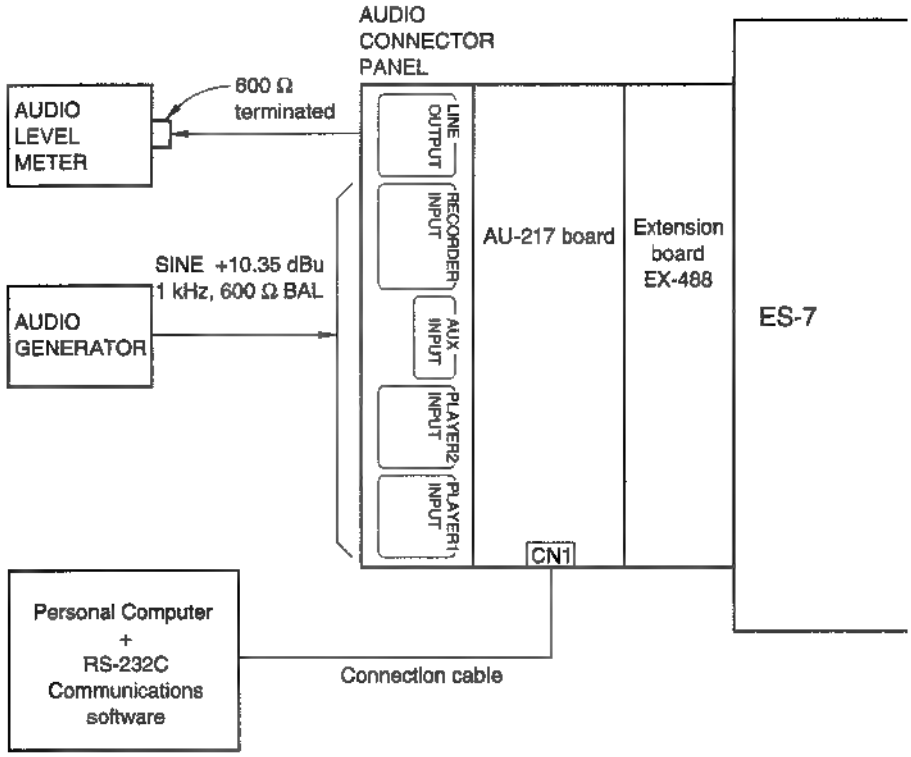

* To connect a personal computer and AU-217 board, make the following cable.

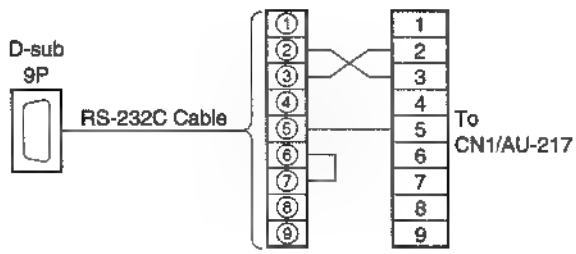

Connector housing 9P
Sony part number : 1-506-474-11

4-2-2. Tools/Measuring Equipments

1. Video Signal Generator
   Equivalent: TSG 130A(NTSC)/Tektronix
   TSG 131A(PAL)/Tektronix

2. Oscilloscope
   Equivalent: 2445/Tektronix

3. Waveform Monitor and Vectorscope
   Equivalent: 1765/Tektronix

4. Video Monitor
   Equivalent: PVM1444Q/Sony

5. Frequency Counter
   Equivalent: 5315/Hewlett Packard

6. Digital Voltmeter
   Equivalent: 3435A/Hewlett Packard

7. Video Cable (S-BNC)
   Sony Parts No.: J-6381-380-A

8. Extension Board (EX-488)
   Sony Part No.: J-6441-950-A

9. Audio Signal Generator
   Equivalent: 8944/Hewlett Packard

10. Audio Level Meter
    Equivalent: 3400A/Hewlett Packard

11. Personal Computer bundled with RS-232C communications software

12. Connection Cable (to connect a personal computer and AU-217 board)

4-2-3. Built-in Color Bars

Select a built-in color bar by using the GUI (Graphical User Interface) function built in the ES-7.

How to select a built-in color bar

1. Turn on the power of the ES-7 and a personal computer in order.
2. Start the system.
3. Double click the SelfDiag icon in the Sony EditStation group.
4. Click the SWITCHER/DME icon.
5. Click the MANUAL CHECK icon.
6. According to the board required to be adjusted, select the directory as follows;

DA-95 board
A BUS (BACK) = TITLER
B BUS (FORE) = TITLER
PGM OUT = SW OUT
DSK = ☐ (not checked)

DAC-20 board
A BUS (BACK) = TITLER
B BUS (FORE) = TITLER
PGM OUT = SW OUT
MONI OUT = T-FILL
DSK = ☒ (checked)

AD-115 board
A BUS (BACK) = VIN1
B BUS (FORE) = TITLER

7. Select the directory as shown in the GUI setting of each adjustment item.
8. Click the LOAD button.
9. Select the directory C:\SERVICE.
10. Select the directory of 75CB_R.VPR, 100CB_R.VPR or BOWTIE. VPR from the list. Then, click the OK button.

Note: Select the directory as shown in the GUI setting of each adjustment item.

Built-in Color Bars (FOR UC)

COMPOSITE

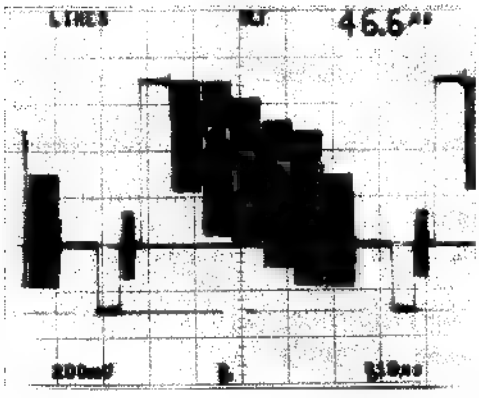

COMPONENT R-Y

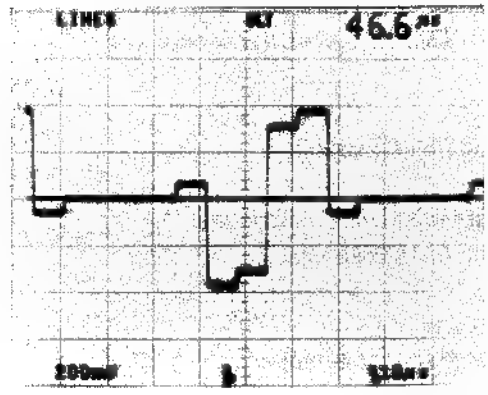

COMPONENT Y

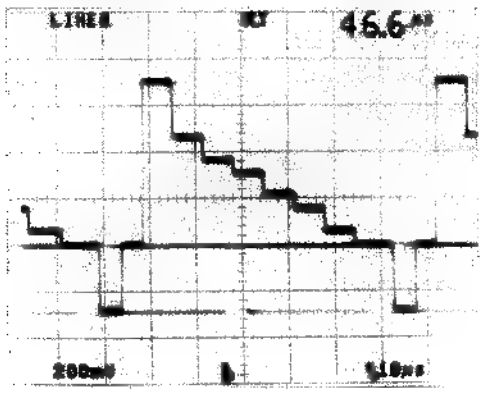

COMPONENT B-Y

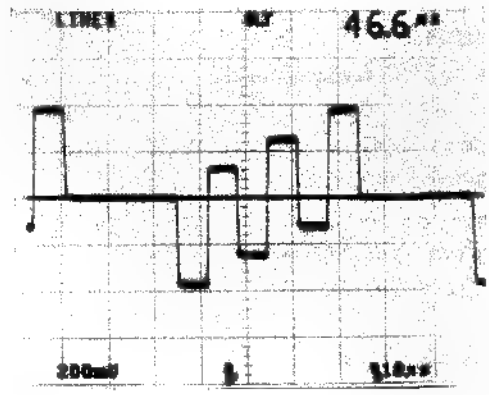

Built-in Color Bars (FOR CE)

COMPOSITE

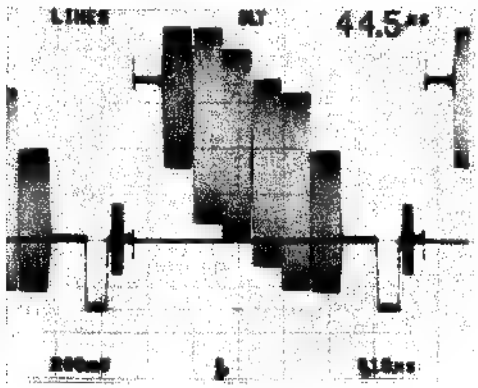

COMPONENT R-Y

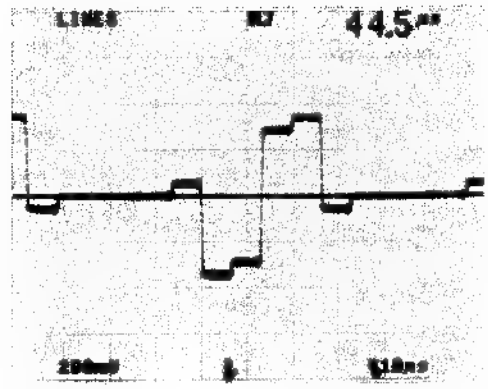

COMPONENT Y

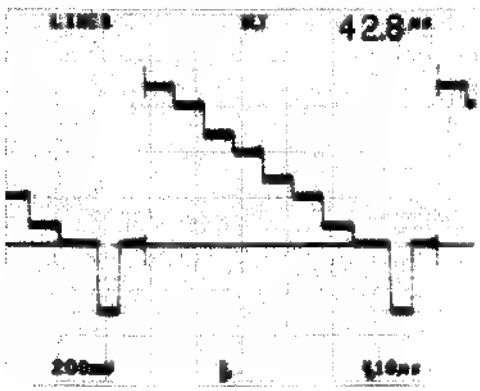

COMPONENT B-Y

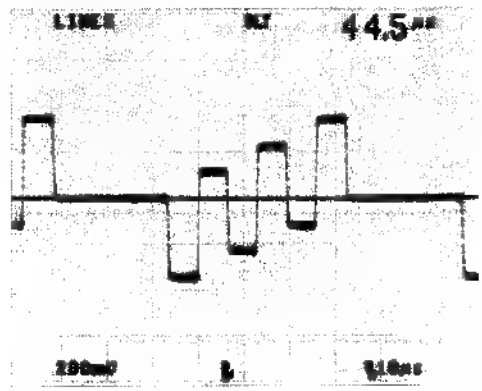

4-2-4. Layout of Adjustment Controls

DA-95 Board (A Side)

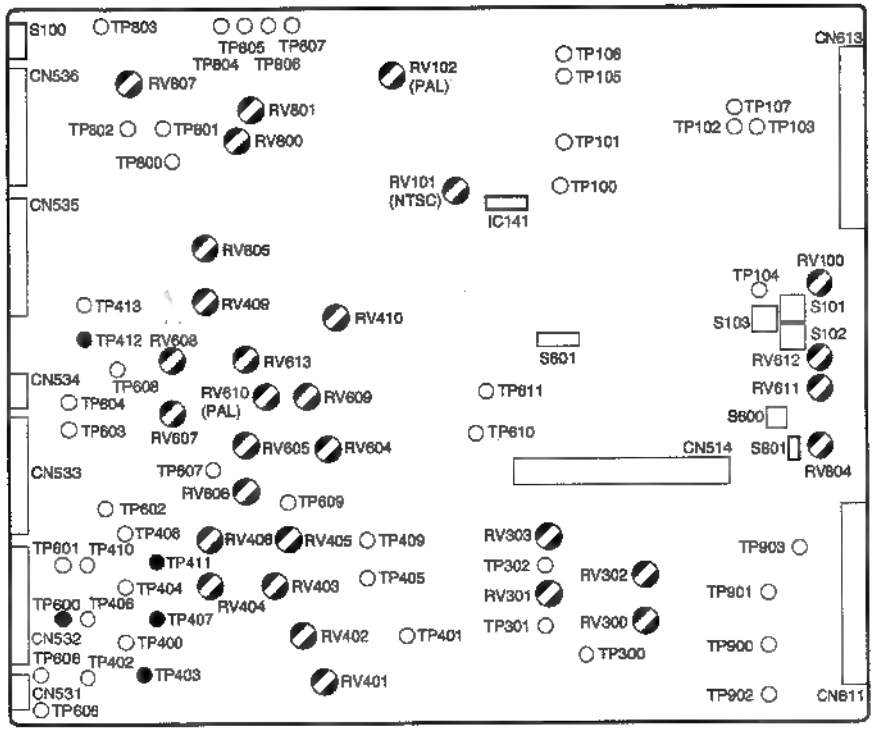

DAC-20 Board (A Side)

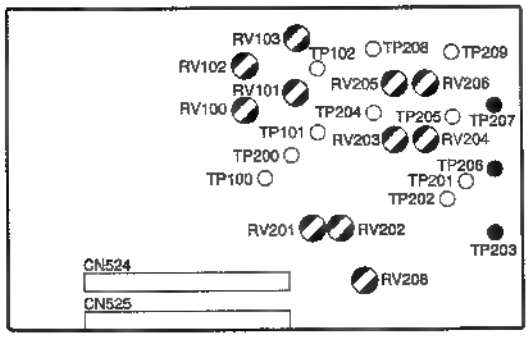

AD-115 Board (A Side)

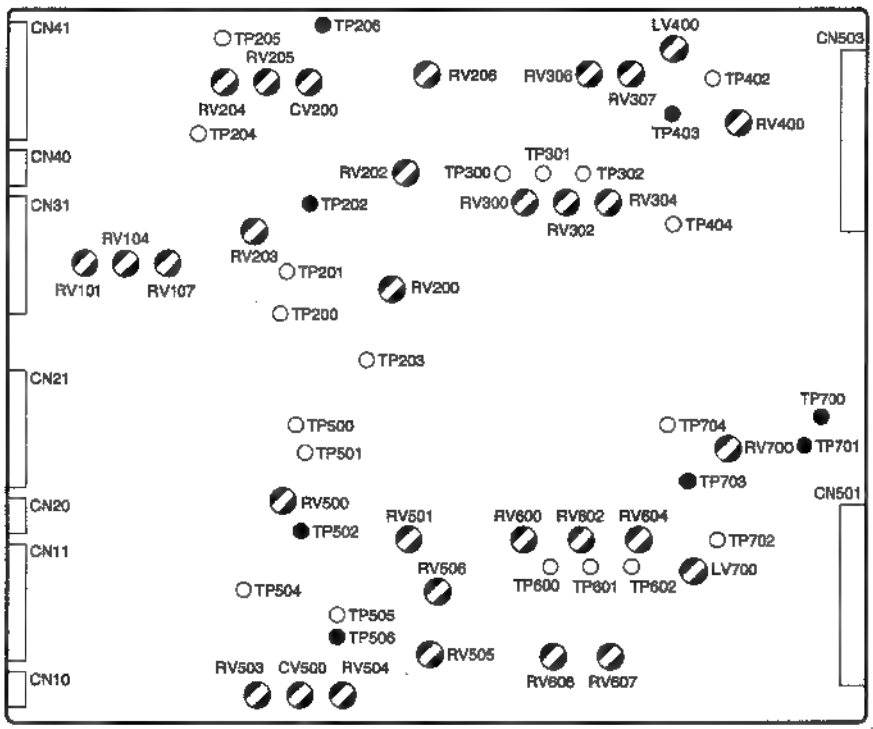

AU-217 Board (A Side)

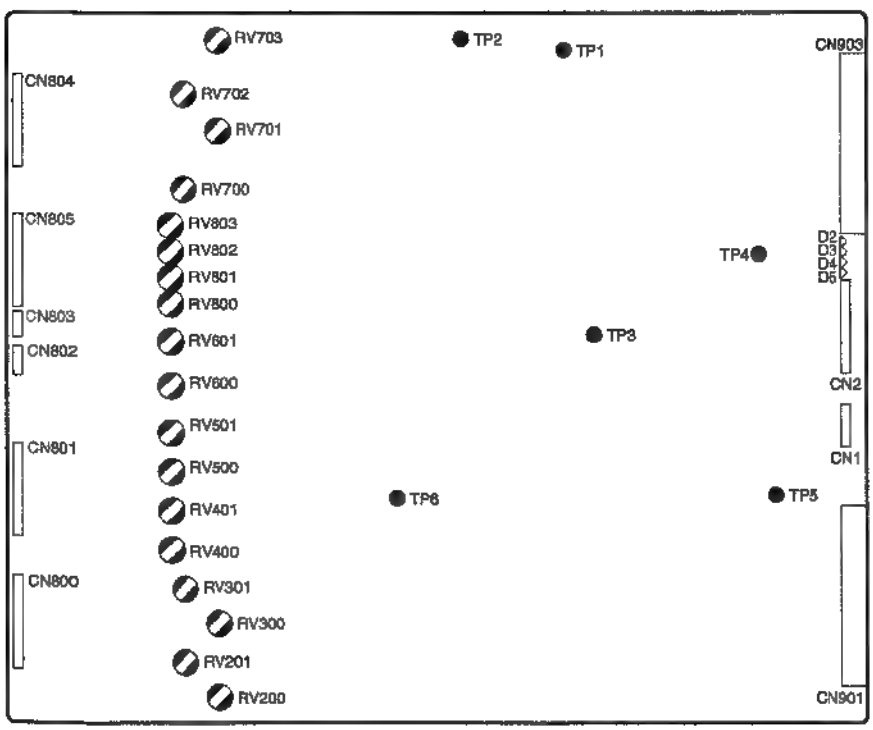

4-3. DA-95 BOARD ADJUSTMENT

4-3-1. GEN LOCK Adjustment

FOR UC

<table>
<tr><th>Machine conditions for adjustment</th><th>Specifications</th><th>Adjusting Point</th></tr>
<tr><td colspan="3">STEP-1
• Connection: Section 4-2-1 Connection
• Extension board: Extend the DA-95 board with the EX-488 board.
• GUI setting
1. TITLER = 75CB_R. VPR</td></tr>
<tr><td>STEP-2

• Oscilloscope
CH-1: 200 mV/DIV
2 µs/DIV
CH-2: 200 mV/DIV
2 µs/DIV
TRIG: B.B (CH-4)</td><td>• CH-1: TP600/DA-95 (A-10)
CH-2: GEN LOCK IN

NG
 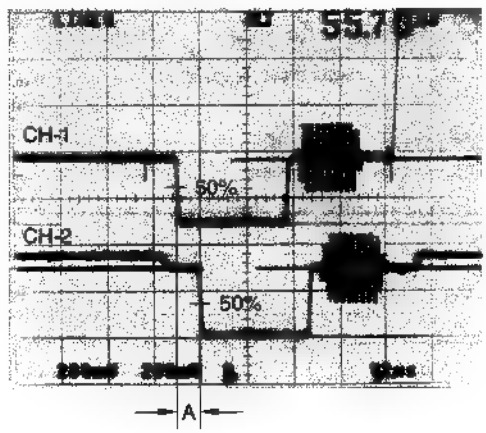

OK
 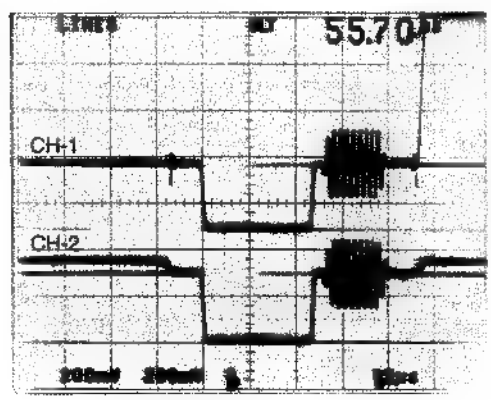

A = 0 ± 20 ns

• Adjust ⊘RV100 so that the specification above is satisfied.</td><td>H PHASE FINE adjustment
⊘ RV100/DA-95 (L-4)</td></tr>
</table>

(4-3-1. GEN LOCK Adjustment)

FOR CE

<table>
<tr><th>Machine conditions for adjustment</th><th>Specifications</th><th>Adjusting Point</th></tr>
<tr><td colspan="3">STEP-1
• Connection: Section 4-2-1 Connection
• Extension board: Extend the DA-95 board with the EX-488 board.
• GUI setting
1. TITLER = P100CB_R. VPR</td></tr>
<tr><td>STEP-2

• Oscilloscope
CH-1: 200 mV/DIV
2 µs/DIV
CH-2: 200 mV/DIV
2 µs/DIV
TRIG: B.B (CH-4)</td><td>• CH-1: TP600/DA-95 (A-10)
CH-2: GEN LOCK IN

NG
 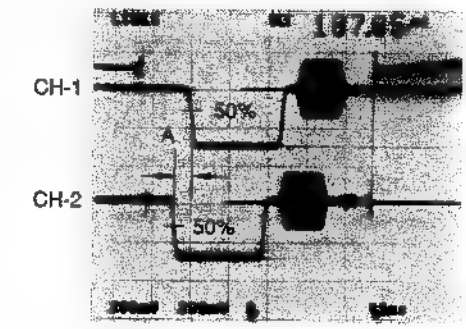

OK
 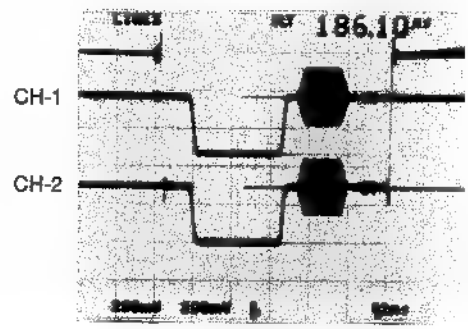

A = 0 ± 20 ns

• Adjust ⊘RV100 so that the specification above is satisfied.</td><td>H PHASE FINE adjustment
⊘ RV100/DA-95 (L-4)</td></tr>
</table>

4-3-2. COMPONENT RGB MATRIX LEVEL BALANCE Adjustment

Machine conditions for adjustment	Specifications	Adjusting Point
STEP-1 • Connection: Section 4-2-1 Connection • Extension board: Extend the DA-95 board with the EX-486 board. • GUI setting 1. TITLER = 100CB_R. VPR (for UC) P100CB_R. VPR (for CE) 2. PGM FORMAT = RGB		
STEP-2 • Oscilloscope CH-1: 200 mV/DIV 20 µs/DIV TRIG: TP412/DA-95 (A-6)	• TP407/DA-95 (B-10) Adjust to be same level (±10 mV) 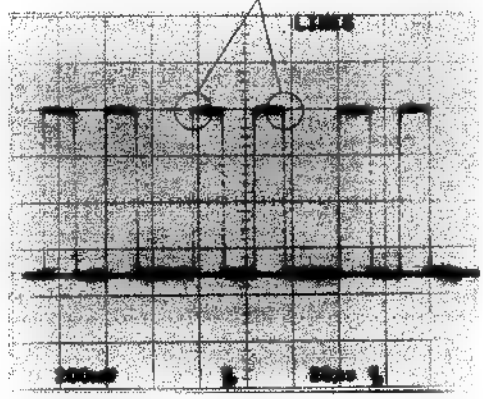	⊘ RV301/DA-95 (G-10)
STEP-3 • Oscilloscope CH-1: 200 mV/DIV 20 µs/DIV TRIG: TP412/DA-95 (A-6)	• TP411/DA-95 (B-9) Adjust to be same level (±10 mV) 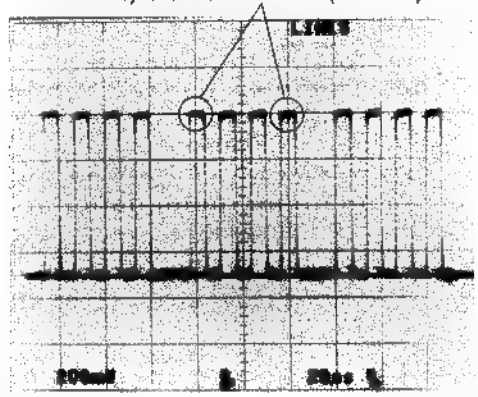	⊘ RV303/DA-95 (G-9)

4-3-3. PROGRAM OUTPUT G GAIN Adjustment

Machine conditions for adjustment	Specifications	Adjusting Point
STEP-1 • Connection: Section 4-2-1 Connection • Extension board: Extend the DA-95 board with the EX-488 board. • GUI setting 1. TITLER = 100CB_R. VPR (for UC) P100CB_R. VPR (for CE) 2. PGM FORMAT = RGB		
STEP-2 • (1) or (2) is used. (1) Waveform Monitor INPUT: CH-A1 MODE: WFM REF : EXT (2) Oscilloscope CH-1: 200 mV/DIV 10 µs/DIV TRIG: B.B (CH-4)	PROGRAM OUTPUT G/Y 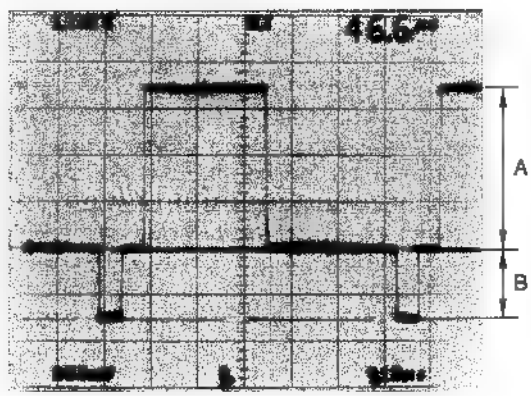 **A = 700 ± 10 mV** **B = 300 ± 5 mV**	A: G GAIN adjustment ● RV401/DA-95 (E-11) B: SYNC LEVEL (G) adjustment ● RV410/DA-95 (E-5)

4-3-4. PROGRAM OUTPUT R GAIN Adjustment

Machine conditions for adjustment	Specifications	Adjusting Point
STEP-1 • Connection: Section 4-2-1 Connection • Extension board: Extend the DA-95 board with the EX-488 board. • GUI setting 1. TITLER = 100CB_R. VPR (for UC) P100CB_R. VPR (for CE) 2. PGM FORMAT = RGB		
STEP-2 • (1) or (2) is used. (1) Waveform Monitor INPUT: CH-A3 MODE: WFM REF : EXT (2) Oscilloscope CH-1: 200 mV/DIV 10 µs/DIV TRIG: B.B (CH-4)	PROGRAM OUTPUT G/Y 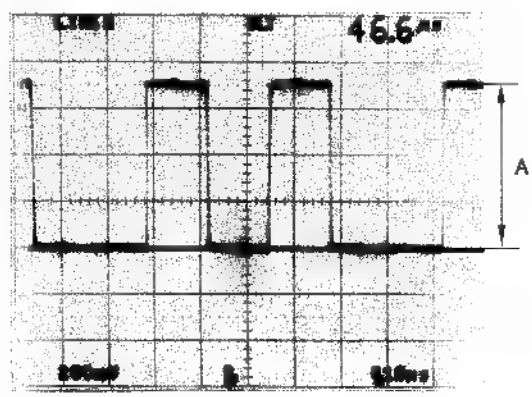 **A = 700 ± 10 mV**	R GAIN adjustment ● RV403/DA-95 (D-10)

4-3-5. PROGRAM OUTPUT B GAIN Adjustment

Machine conditions for adjustment	Specifications	Adjusting Point
STEP-1 • Connection: Section 4-2-1 Connection • Extension board: Extend the DA-95 board with the EX-488 board. • GUI setting 1. TITLER = 100CB_R. VPR (for UC) P100CB_R. VPR (for CE) 2. PGM FORMAT = RGB		
STEP-2 • (1) or (2) is used. (1) Waveform Monitor INPUT: CH-A2 MODE: WFM REF : EXT (2) Oscilloscope CH-1: 200 mV/DIV 10 µs/DIV TRIG: B.B (CH-4)	PROGRAM OUTPUT B-Y/B 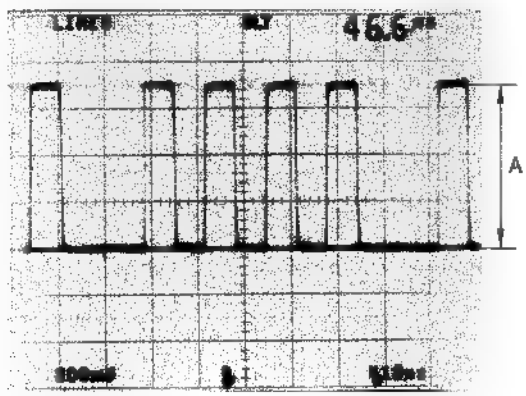 A = 700 ± 10 mV	■ GAIN adjustment ⊘ RV405/DA-95 (D-9)

4-3-6. PROGRAM OUTPUT COMPONENT Y GAIN Adjustment

FOR UC

Machine conditions for adjustment	Specifications	Adjusting Point
STEP-1 • Connection: Section 4-2-1 Connection • Extension board: Extend the DA-95 board with the EX-488 board. • GUI setting 1. TITLER = 75CB_R. VPR 2. PGM FORMAT = YUV		
STEP-2 • (1) or (2) is used. (1) Waveform Monitor INPUT : CH-A1 MODE : WFM REF : EXT (2) Oscilloscope CH-1: 200 mV/DIV 10 µs/DIV TRIG: B.B (CH-4)	PROGRAM OUTPUT G/Y 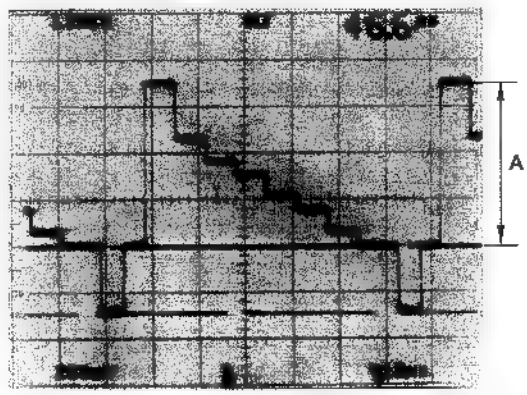 **A = 714 ± 5 mV**	Y GAIN adjustment ● RV402/DA-95 (D-10)

FOR CE

Machine conditions for adjustment	Specifications	Adjusting Point
STEP-1 • Connection: Section 4-2-1 Connection • Extension board: Extend the DA-95 board with the EX-488 board. • GUI setting 1. TITLER = P100CB_R. VPR 2. PGM FORMAT = YUV		
STEP-2 • (1) or (2) is used. (1) Waveform Monitor INPUT : CH-A1 MODE : WFM REF : EXT (2) Oscilloscope CH-1: 200 mV/DIV 10 µs/DIV TRIG: B.B (CH-4)	PROGRAM OUTPUT G/Y 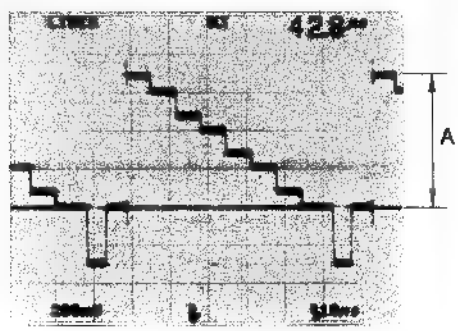 **A = 700 ± 5 mV**	Y GAIN adjustment ● RV402/DA-95 (D-10)

4-3-7. PROGRAM OUTPUT COMPONENT R-Y GAIN Adjustment

FOR UC

Machine conditions for adjustment	Specifications	Adjusting Point
STEP-1 • Connection: Section 4-2-1 Connection • Extension board: Extend the DA-95 board with the EX-488 board. • GUI setting 1. TITLER = 75CB_R. VPR 2. PGM FORMAT = YUV		
STEP-2 • (1) or (2) is used. (1) Waveform Monitor INPUT : CH-A3 MODE : WFM REF : EXT (2) Oscilloscope CH-1: 200 mV/DIV 10 µs/DIV TRIG: B.B (CH-4)	PROGRAM OUTPUT R-Y/R 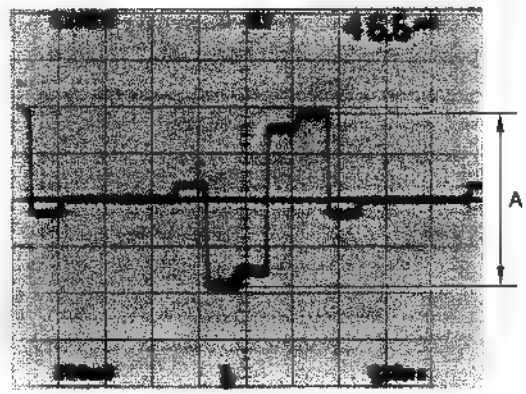 A = 756 ± 5 mV p-p	R-Y GAIN adjustment ● RV404/DA-95 (C-10)

FOR CE

Machine conditions for adjustment	Specifications	Adjusting Point
STEP-1 • Connection: Section 4-2-1 Connection • Extension board: Extend the DA-95 board with the EX-488 board. • GUI setting 1. TITLER = P100CB_R. VPR 2. PGM FORMAT = YUV		
STEP-2 • (1) or (2) is used. (1) Waveform Monitor INPUT : CH-A3 MODE : WFM REF : EXT (2) Oscilloscope CH-1: 200 mV/DIV 10 µs/DIV TRIG: B.B (CH-4)	PROGRAM OUTPUT R-Y/R 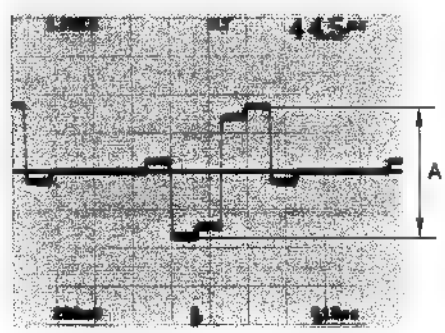 A = 700 ± 5 mV p-p	R-Y GAIN adjustment ● RV404/DA-95 (C-10)

4-3-8. PROGRAM OUTPUT COMPONENT B-Y GAIN Adjustment

FOR UC

Machine conditions for adjustment	Specifications	Adjusting Point
STEP-1 • Connection: Section 4-2-1 Connection • Extension board: Extend the DA-95 board with the EX-488 board. • GUI setting 1. TITLER = 75CB_R. VPR 2. PGM FORMAT = YUV		
STEP-2 • (1) or (2) is used. (1) Waveform Monitor INPUT: CH-A2 MODE: WFM REF : EXT (2) Oscilloscope CH-1: 200 mV/DIV 10 µs/DIV TRIG: B.B (CH-4)	PROGRAM OUTPUT B-Y/B 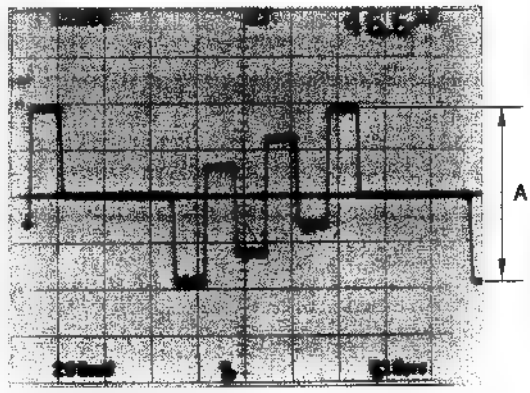 **A = 756 ± 5 mV p-p**	B-Y GAIN adjustment ● RV406/DA-95 (C-9)

FOR CE

Machine conditions for adjustment	Specifications	Adjusting Point
STEP-1 • Connection: Section 4-2-1 Connection • Extension board: Extend the DA-95 board with the EX-488 board. • GUI setting 1. TITLER = P100CB_R. VPR 2. PGM FORMAT = YUV		
STEP-2 • (1) or (2) is used. (1) Waveform Monitor INPUT: CH-A2 MODE: WFM REF : EXT (2) Oscilloscope CH-1: 200 mV/DIV 10 µs/DIV TRIG: B.B (CH-4)	PROGRAM OUTPUT B-Y/B 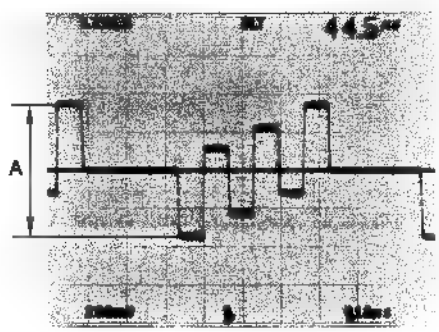 **A = 700 ± 5 mV p-p**	B-Y GAIN adjustment ● RV406/DA-95 (C-9)

4-3-9. Y/R-Y DELAY Adjustment

Machine conditions for adjustment	Specifications	Adjusting Point
STEP-1 • Connection: Section 4-2-1 Connection • Extension board: Extend the DA-95 board with the EX-488 board. • GUI setting 1. TITLER = BOWTIE. VPR (for UC) PBOWTIE. VPR (for CE) 2. PGM FORMAT = YUV		
STEP-2 • Oscilloscope CH-1: 100 mV/DIV CH-2: 200 mV/DIV 10 µs/DIV TRIG: B.B (CH-4) MODE: INVERT. ADD	CH-1: TP403/DA-95 (B-11) CH-2: TP407/DA-95 (B-10) 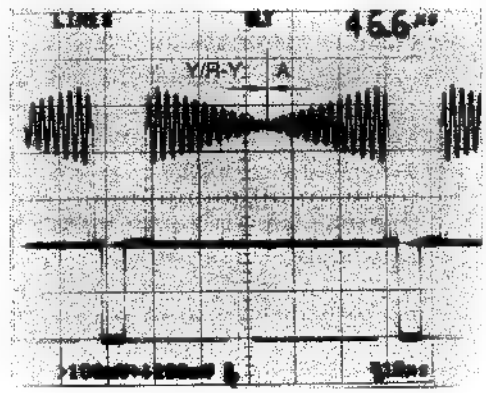 A = 0 ± 10 ns	Y/R-Y DELAY adjustment ● RV300/DA-95 (I-10)

4-3-10. Y/B-Y DELAY Adjustment

Machine conditions for adjustment	Specifications	Adjusting Point
STEP-1 • Connection: Section 4-2-1 Connection • Extension board: Extend the DA-95 board with the EX-488 board. • GUI setting 1. TITLER = BOWTIE. VPR (for UC) PBOWTIE. VPR (for CE) 2. PGM FORMAT = YUV		
STEP-2 • Oscilloscope CH-1: 100 mV/DIV CH-2: 200 mV/DIV 10 µs/DIV TRIG: B.B (CH-4) MODE: INVERT. ADD	CH-1: TP403/DA-95 (B-11) CH-2: TP411/DA-95 (B-9) 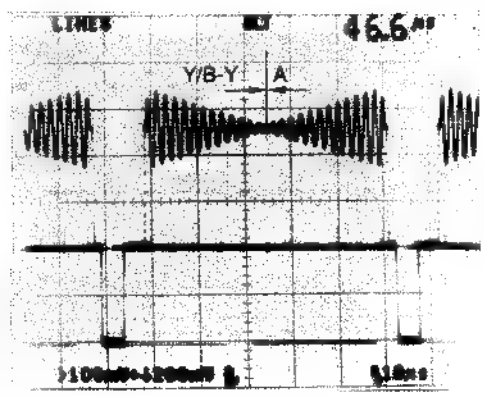 A = 0 ± 10 ns	Y/B-Y DELAY adjustment ● RV302/DA-95 (I-9)

4-3-11. COMPOSITE SC LEAK BALANCE Adjustment

FOR UC

Machine conditions for adjustment	Specifications	Adjusting Point
STEP-1 • Connection: Section 4-2-1 Connection • Extension board: Extend the DA-95 board with the EX-488 board.		
STEP-2 • (1) or (2) is used. (1) Waveform Monitor INPUT: CH-A MODE: WFM REF : EXT (2) Oscilloscope CH-1: 100 mV/DIV 2 µs/DIV TRIG: B.B (CH-4)	PROGRAM OUTPUT VIDEO 1 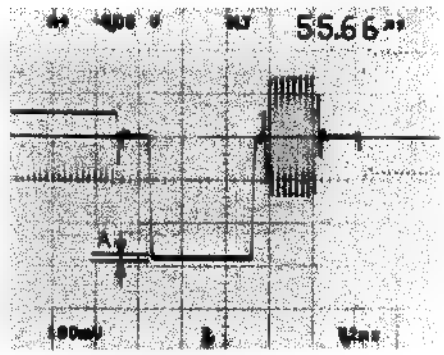 **A = Below 20 mV (Adjust to minimum.)**	SC LEAK (R-Y) adjustment ● RV606/DA-95 (D-8) SC LEAK (B-Y) adjustment ● RV605/DA-95 (D-7)

FOR CE

Machine conditions for adjustment	Specifications	Adjusting Point
STEP-1 • Connection: Section 4-2-1 Connection • Extension board: Extend the DA-95 board with the EX-488 board.		
STEP-2 • (1) or (2) is used. (1) Waveform Monitor INPUT: CH-A MODE: WFM REF : EXT (2) Oscilloscope CH-1: 100 mV/DIV 2 µs/DIV TRIG: B.B (CH-4)	PROGRAM OUTPUT VIDEO 1 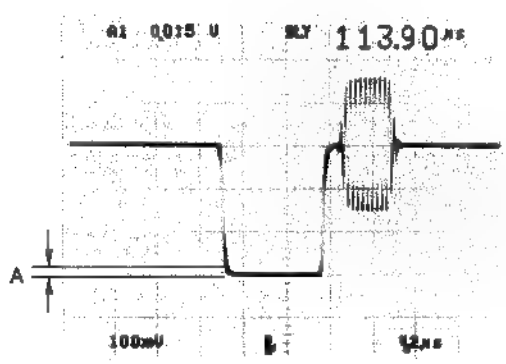 **A = Below 20 mV (Adjust to minimum.)**	SC LEAK (R-Y) adjustment ● RV606/DA-95 (D-8) SC LEAK (B-Y) adjustment ● RV605/DA-95 (D-7)

4-3-12. COMPOSITE CHROMA GAIN Adjustment

FOR UC

Machine conditions for adjustment	Specifications	Adjusting Point
STEP-1 • Connection: Section 4-2-1 Connection • Extension board: Extend the DA-95 board with the EX-488 board. • GUI setting 1. TITLER = 75CB_R. VPR		
STEP-2 • Vectorscope 75% L. DISP : VECT INPUT : CH-A FILTER : FLAT REF : EXT	PROGRAM OUTPUT VIDEO 1 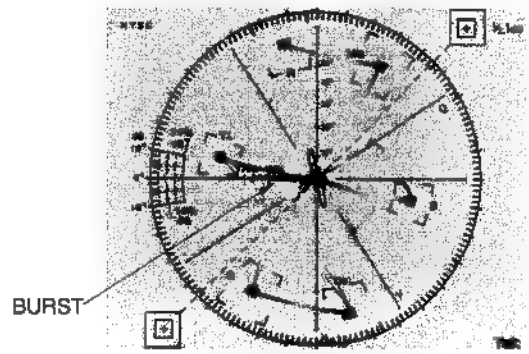 All luminance points should be inside the respective "⊞" mark on the vectorscope. • Adjust ●RV608, ●RV604 and ●RV613 so that MG, B, CY, G, YL and R should be in the center of "⊞" mark.	C LEVEL adjustment ●RV608/DA-95 (C-6) B-Y LEVEL adjustment ●RV604/DA-95 (E-7) U-V adjustment ●RV613/DA-95 (D-6)

(4-3-12. COMPOSITE C GAIN Adjustment)

FOR CE

Machine conditions for adjustment	Specifications	Adjusting Point
STEP-1 • Connection: Section 4-2-1 Connection • Extension board: Extend the DA-95 board with the EX-488 board. • GUI setting 1. TITLER = P100CB_R. VPR		
STEP-2 • Vectorscope 100% L. DISP : VECT INPUT : CH-A FILTER : FLAT REF : EXT	PROGRAM OUTPUT VIDEO 1 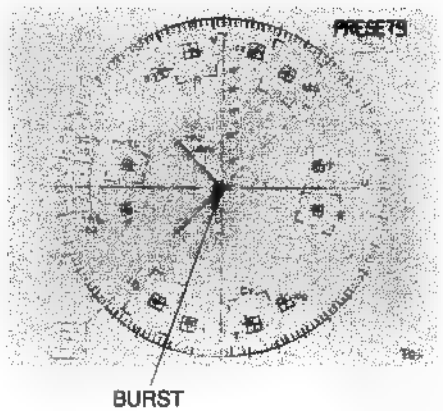 All luminance points should be inside the respective " ⊞" mark on the vectorscope. • Adjust ⊘RV608, ⊘RV604 and ⊘RV613 so that MG, mg, B, b, CY, cy, G, g, YL, yl, R and r should be in the center of "⊞" mark.	C LEVEL adjustment ⊘RV608/DA-95 (C-6) B-Y LEVEL adjustment ⊘RV604/DA-95 (E-7) U-V adjustment ⊘RV613/DA-95 (D-6)

4-3-13. COMPOSITE Y GAIN Check

FOR UC

Machine conditions for adjustment	Specifications	Adjusting Point
STEP-1 • Connection: Section 4-2-1 Connection • Extension board: Extend the DA-95 board with the EX-488 board. • GUI setting 1. TITLER = 75CB_R. VPR		
STEP-2 • (1) or (2) is used. (1) Waveform Monitor INPUT : CH-A MODE : WFM REF : EXT (2) Oscilloscope CH-1: 200 mV/DIV 10 µs/DIV TRIG: B.B (CH-4)	PROGRAM OUTPUT VIDEO 1 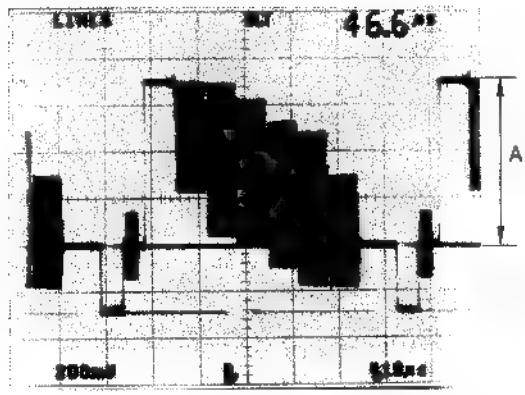 A = 714 ± 15 mV	

FOR CE

Machine conditions for adjustment	Specifications	Adjusting Point
STEP-1 • Connection: Section 4-2-1 Connection • Extension board: Extend the DA-95 board with the EX-488 board. • GUI setting 1. TITLER = P100CB_R. VPR		
STEP-2 • (1) or (2) is used. (1) Waveform Monitor INPUT : CH-A MODE : WFM REF : EXT (2) Oscilloscope CH-1: 200 mV/DIV 10 µs/DIV TRIG: B.B (CH-4)	PROGRAM OUTPUT VIDEO 1 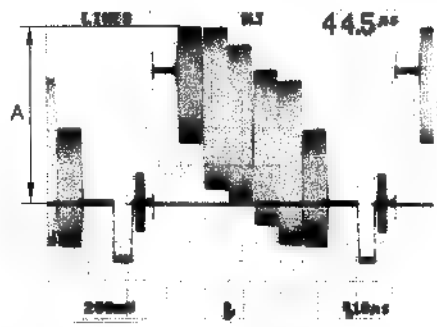 A = 700 ± 15 mV	

4-3-14. COMPOSITE BURST GAIN Adjustment

FOR UC

Machine conditions for adjustment	Specifications	Adjusting Point
STEP-1 • Connection: Section 4-2-1 Connection • Extension board: Extend the DA-95 board with the EX-488 board.		
STEP-2 • (1) or (2) is used. (1) Waveform Monitor INPUT: CH-A MODE: WFM REF : EXT (2) Oscilloscope CH-1: 100 mV/DIV ■ µs/DIV TRIG: B.B (CH-4)	PROGRAM OUTPUT VIDEO 1 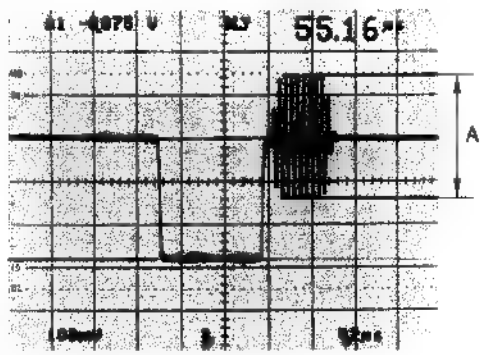 A = 286 ± 4 mV	BURST GAIN adjustment ● RV609/DA-95 (E-7)

FOR CE

Machine conditions for adjustment	Specifications	Adjusting Point
STEP-1 • Connection: Section 4-2-1 Connection • Extension board: Extend the DA-95 board with the EX-488 board.		
STEP-2 • (1) or (2) is used. (1) Waveform Monitor INPUT: CH-A MODE: WFM REF : EXT (2) Oscilloscope CH-1: 100 mV/DIV 2 µs/DIV TRIG: B.B (CH-4)	PROGRAM OUTPUT VIDEO 1 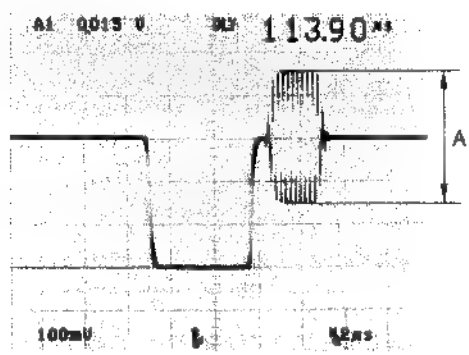 A = 300 ± 4 mV	BURST GAIN adjustment ● RV609/DA-95 (E-7)

4-3-15. INT SC PHASE Adjustment

FOR UC

<table>
<tr><th>Machine conditions for adjustment</th><th>Specifications</th><th>Adjusting Point</th></tr>
<tr><td colspan="3">STEP-1
• Connection: Section 4-2-1 Connection
• Extension board: Extend the DA-95 board with the EX-468 board.
• Disconnect the GEN LOCK IN connector of the rear panel.
• Switch setting: S600/DA-95 (H-6) = 0 °</td></tr>
<tr><td>STEP-2
• Turn ⊘RV612 fully clockwise.

• Turn ⊘RV612 counterclockwise to the first position of which the specification is satisfied.

• Vectorscope
75%
L. DISP : VECT
INPUT : CH-A
FILTER : FLAT
GAIN : VAR
REF : EXT</td><td>PROGRAM OUTPUT VIDEO 1

NG
 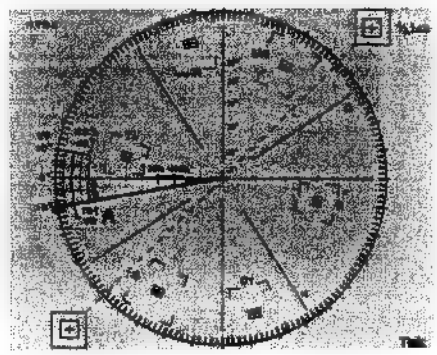

OK
 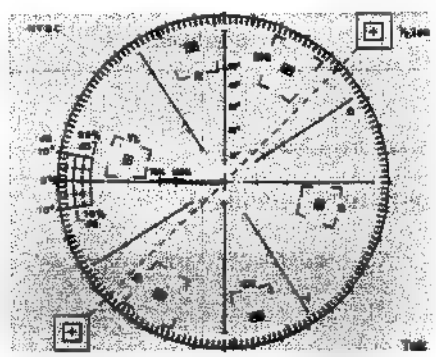

A = 0 ± 0.5 °

Adjust ⊘RV612 so that the specification above is satisfied.</td><td>INT SC PHASE adjustment
⊘ RV612/DA-95 (L-6)</td></tr>
<tr><td colspan="3">STEP-3
• After this adjustment is completed, connect the GEN LOCK IN connector of the rear panel again.</td></tr>
</table>

(4-3-15. INT SC PHASE Adjustment)

FOR CE

<table>
<tr><th>Machine conditions for adjustment</th><th>Specifications</th><th>Adjusting Point</th></tr>
<tr><td colspan="3">STEP-1
• Connection: Section 4-2-1 Connection
• Extension board: Extend the DA-95 board with the EX-488 board.
• Disconnect the GEN LOCK IN connector of the rear panel.
• Switch setting: S600/DA-95 (H-6) = 180 °</td></tr>
<tr><td>STEP-2
• Turn ⊘RV612 fully clockwise.

• Turn ⊘RV612 counterclockwise to the first position of which the specification is satisfied.

• Vectorscope
100%
L. DISP : VECT
INPUT : CH-A
FILTER : FLAT
GAIN : VAR
REF : EXT</td><td>PROGRAM OUTPUT VIDEO 1

NG
 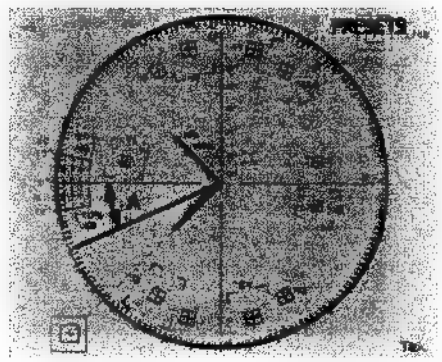

OK
 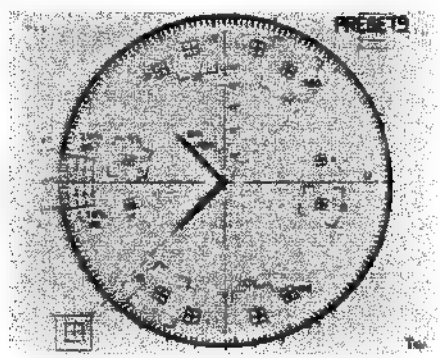

A = 0 ± 0.5 °

• Adjust ⊘RV612 so that the specification above is satisfied.</td><td>INT SC PHASE adjustment
⊘ RV612/DA-95 (L-6)</td></tr>
<tr><td colspan="3">STEP-3
• After this adjustment is completed, connect the GEN LOCK IN connector of the rear panel again.</td></tr>
</table>

4-3-16. EXT SC PHASE Adjustment

FOR UC

<table>
<tr><th>Machine conditions for adjustment</th><th>Specifications</th><th>Adjusting Point</th></tr>
<tr><td colspan="3">STEP-1
• Connection: Section 4-2-1 Connection
• Extension board: Extend the DA-95 board with the EX-488 board.
• Switch setting: S600/DA-95 (L7) = 0 °</td></tr>
<tr><td>STEP-2
• Turn⊘RV611 fully counter-clockwise.

• Turn ⊘RV611 clockwise to the first position of which the specification is satisfied.

• Vectorscope
75%
L. DISP : VECT
INPUT : CH-A
FILTER : FLAT
GAIN : VAR
REF : INT</td><td>PROGRAM OUTPUT VIDEO 1

NG
 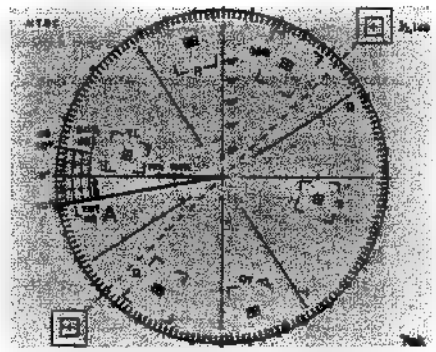

OK
 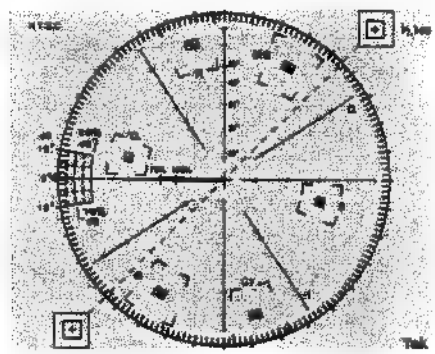

A = 0 ± 0.5 °

• Adjust ⊘RV611 so that the specification above is satisfied.</td><td>SC PHASE FINE adjustment
⊘ RV611/DA-95 (L-6)</td></tr>
</table>

(4-3-16. EXT SC PHASE Adjustment)

FOR CE

<table>
<tr><th>Machine conditions for adjustment</th><th>Specifications</th><th>Adjusting Point</th></tr>
<tr><td colspan="3">STEP-1
• Connection: Section 4-2-1 Connection
• Extension board: Extend the DA-95 board with the EX-488 board.
• Switch setting: S600/DA-95 (L7) = 180 °</td></tr>
<tr><td>STEP-2
• Turn ⊘RV611 fully counter-clockwise.

• Turn ⊘RV611 clockwise to the first position of which the specification is satisfied.

• Vectorscope
100%
L. DISP : VECT
INPUT : CH-A
FILTER : FLAT
GAIN : VAR
REF : INT</td><td>PROGRAM OUTPUT VIDEO 1

NG
 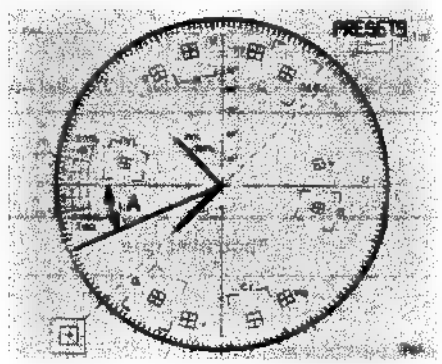

OK
 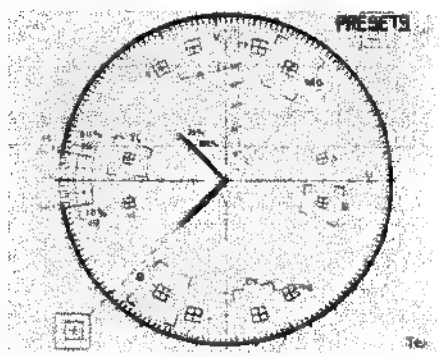

A = 0 ± 0.5 °

• Adjust ⊘RV611 so that the specification above is satisfied.</td><td>SC PHASE FINE adjustment
⊘ RV611/DA-95 (L-6)</td></tr>
</table>

4-3-17. INT SC FREQUENCY Adjustment

FOR UC

Machine conditions for adjustment	Specifications	Adjusting Point
STEP-1 • Connection: Section 4-2-1 Connection • Extension board: Extend the DA-95 board with the EX-488 board. • Disconnect the GEN LOCK IN connector of the rear panel.		
STEP-2 • Connect a frequency counter to IC141 (G-4) -16 pin. GND: E4/DA-95 (F-1)	**3.579545 MHz ± 5Hz**	SC FREQUENCY adjustment ● RV101/DA-95 (F-3)
STEP-3 • After this adjustment is completed, connect the GEN LOCK IN connector of the rear panel again.		

FOR CE

Machine conditions for adjustment	Specifications	Adjusting Point
STEP-1 • Connection: Section 4-2-1 Connection • Extension board: Extend the DA-95 board with the EX-488 board. • Disconnect the GEN LOCK IN connector of the rear panel.		
STEP-2 • Connect a frequency counter to IC141 (G-4) -16 pin. GND: E4/DA-95 (F-1)	**4.433619 MHz ± 5Hz**	SC FREQUENCY adjustment ● RV102/DA-95 (E-2)
STEP-3 • After this adjustment is completed, connect the GEN LOCK IN connector of the rear panel again.		

4-3-18. S-VIDEO COMPONENT Y GAIN Check

FOR UC

<table>
<tr><th>Machine conditions for adjustment</th><th>Specifications</th><th>Adjusting Point</th></tr>
<tr><td colspan="3">STEP-1
• Connection: Section 4-2-1 Connection
• Extension board: Extend the DA-95 board with the EX-488 board.
• GUI setting
1. TITLER = 75CB_R. VPR</td></tr>
<tr><td>STEP-2

• (1) or (2) is used.
(1) Waveform Monitor
INPUT: CH-A1
MODE: WFM
REF : EXT
(2) Oscilloscope
CH-1: 200 mV/DIV
10 µs/DIV
TRIG: B.B (CH-4)</td><td>PROGRAM OUTPUT S VIDEO
 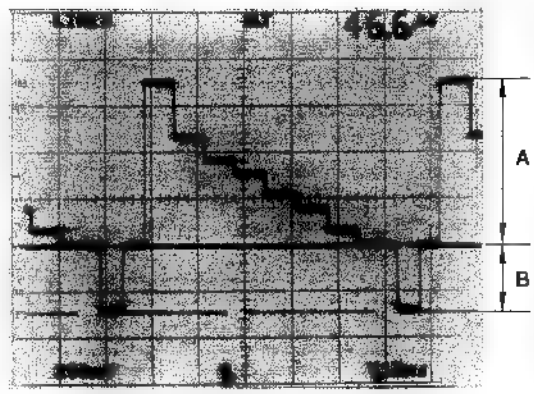

A = 714 ± 15 mV
B = 286 ± 9 mV</td><td></td></tr>
<tr><td colspan="3">STEP-3
• When the specification of STEP-2 is not satisfied, perform section 4-3-6. PROGRAM OUTPUT COMPONENT Y GAIN adjustment again. Then, perform this check.</td></tr>
</table>

(4-3-18. S-VIDEO COMPONENT Y GAIN Check)

FOR CE

<table>
<tr><th>Machine conditions for adjustment</th><th>Specifications</th><th>Adjusting Point</th></tr>
<tr><td colspan="3">STEP-1
• Connection: Section 4-2-1 Connection
• Extension board: Extend the DA-95 board with the EX-488 board.
• GUI setting
1. TITLER = P100CB_R. VPR</td></tr>
<tr><td>STEP-2

• (1) or (2) is used.
(1) Waveform Monitor
INPUT: CH-A1
MODE: WFM
REF : EXT
(2) Oscilloscope
CH-1: 200 mV/DIV
10 µs/DIV
TRIG: B.B (CH-4)</td><td>PROGRAM OUTPUT S VIDEO
 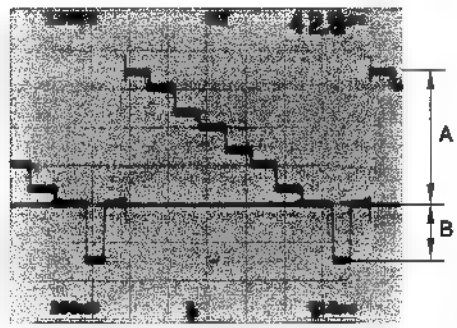

A = 700 ± 10 mV
B = 300 ± 5 mV</td><td></td></tr>
<tr><td colspan="3">STEP-3
• When the specification of STEP-2 is not satisfied, perform section 4-3-6. PROGRAM OUTPUT COMPONENT Y GAIN adjustment again. Then, perform this check.</td></tr>
</table>

4-3-19. S-VIDEO CHROMA GAIN Adjustment

FOR UC

<table>
<tr><th>Machine conditions for adjustment</th><th>Specifications</th><th>Adjusting Point</th></tr>
<tr><td colspan="3">STEP-1
• Connection: Section 4-2-1 Connection
• Connect the PROGRAM OUTPUT S VIDEO connector of the rear panel to the CH-A of the waveform monitor/vectorscope.
• Extension board: Extend the DA-95 board with the EX-488 board.
• GUI setting
1. TITLER = 75CB_R. VPR</td></tr>
<tr><td>STEP-2

• Vectorscope
75%
L. DISP : VECT
INPUT : CH-A
FILTER : FLAT
REF : EXT</td><td>PROGRAM OUTPUT S VIDEO
 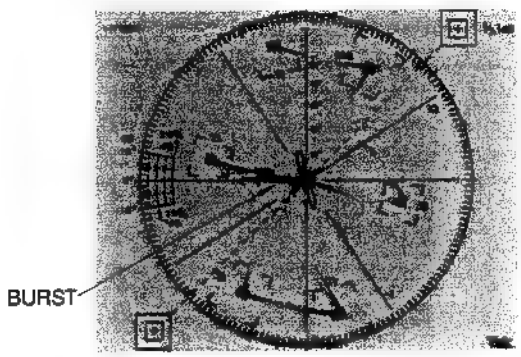

All luminance points should be inside the respective " ⊞" mark on the vectorscope.
• Adjust ⊘RV607 so that MG, B, CY, G, YL, R should be in the center of the " ⊞" mark.</td><td>C LEVEL adjustment
⊘RV607/DA-95 (C-6)</td></tr>
<tr><td colspan="3">STEP-3
After this adjustment is completed, connect the PROGRAM OUTPUT VIDEO 1 connector of the rear panel to the CH-A of the waveform monitor/vectorscope.</td></tr>
</table>

(4-3-19. S-VIDEO C GAIN Adjustment)

FOR CE

<table>
<tr><th>Machine conditions for adjustment</th><th>Specifications</th><th>Adjusting Point</th></tr>
<tr><td colspan="3">STEP-1
• Connection: Section 4-2-1 Connection
• Connect the PROGRAM OUTPUT S VIDEO connector of the rear panel to the CH-A of the waveform monitor/vectorscope.
• Extension board: Extend the DA-95 board with the EX-488 board.
• GUI setting
1. TITLER = P100CB_R. VPR</td></tr>
<tr><td>STEP-2

• Vectorscope
100%
L. DISP : VECT
INPUT : CH-A
FILTER : FLAT
REF : EXT</td><td>PROGRAM OUTPUT S VIDEO
 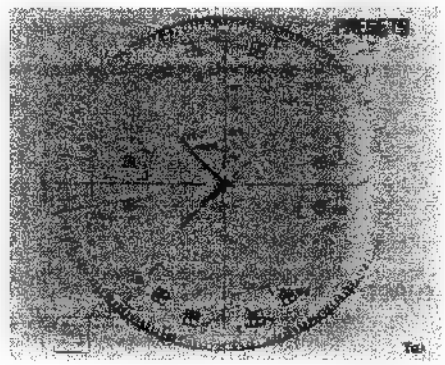
All luminance points should be inside the respective " ⊞" mark on the vectorscope.
• Adjust ❷RV607 so that MG, mg, B, b, CY, cy, G, g, YL, yl, R and r should be in the center of " ⊞ " mark.</td><td>C LEVEL adjustment
❷RV607/DA-95 (C-6)</td></tr>
<tr><td colspan="3">STEP-3
After this adjustment is completed, connect the PROGRAM OUTPUT VIDEO 1 connector of the rear panel to the CH-A of the waveform monitor/vectorscope.</td></tr>
</table>

4-3-20. EXT SC-H Adjustment (B B OUT)

FOR UC

<table>
<tr><th>Machine conditions for adjustment</th><th>Specifications</th><th>Adjusting Point</th></tr>
<tr><td colspan="3">STEP-1
• Connection: Section 4-2-1 Connection
• Extension board: Extend the DA-95 board with the EX-488 board.
• Switch setting: S801/DA-95 (L7) = 0 °</td></tr>
<tr><td>STEP-2
• Turn ⊘RV804 fully counter-clockwise.

• Turn ⊘RV804 clockwise to the first position of which the specification is satisfied.

• Vectorscope
75%
L. DISP : SCH
INPUT : CH-B
FILTER : FLAT
GAIN : VAR
REF : INT</td><td>B B OUT 4

NG
 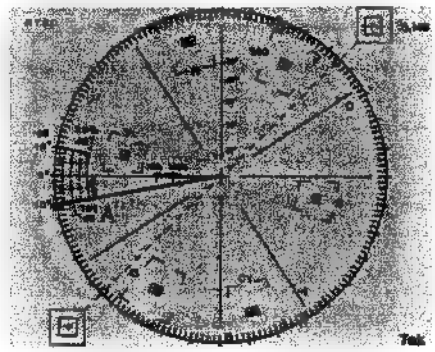

OK
 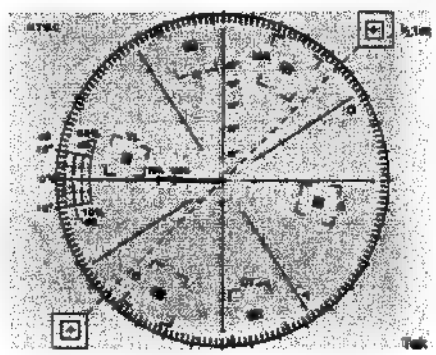

A = 0 ± 0.5 °

• Adjust ⊘RV804 so that the specification above is satisfied.</td><td>EXT SC-H adjustment
⊘ RV804/DA-95 (L-7)</td></tr>
</table>

(4-3-20. EXT SC-H Adjustment (B B OUT))

FOR CE

Machine conditions for adjustment	Specifications	Adjusting Point
STEP-1 • Connection: Section 4-2-1 Connection • Extension board: Extend the DA-95 board with the EX-488 board. • Switch setting: S801/DA-95 (L7) = 180 °		
STEP-2 • Turn ⊘RV804 fully counter-clockwise. • Turn ⊘RV804 clockwise to the first position of which the specification is satisfied. • Vectorscope 100% L. DISP : SCH INPUT : CH-B FILTER : FLAT GAIN : VAR REF : INT	B B OUT 4 NG 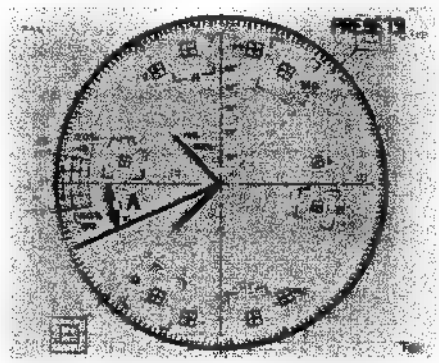 OK 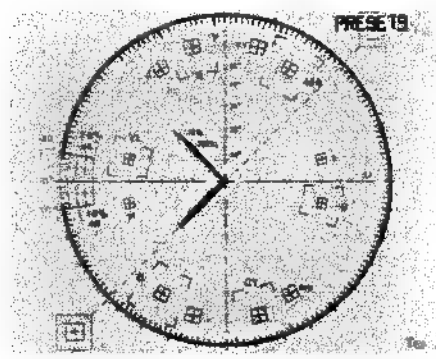 **A = 0 ± 0.5 °** • Adjust ⊘RV804 so that the specification above is satisfied.	EXT SC-H adjustment ⊘ RV804/DA-95 (L-7)

4-3-21. INT SC-H Adjustment (B B OUT)

FOR UC

<table>
<tr><th>Machine conditions for adjustment</th><th>Specifications</th><th>Adjusting Point</th></tr>
<tr><td colspan="3">STEP-1
• Connection: Section 4-2-1 Connection
• Extension board: Extend the DA-95 board with the EX-488 board.
• Disconnect the GEN LOCK IN connector of the rear panel.</td></tr>
<tr><td>STEP-2

• Vectorscope
75%
L. DISP : SCH
INPUT : CH-B
FILTER : FLAT
GAIN : VAR
REF : INT</td><td>B B OUT 4

NG
 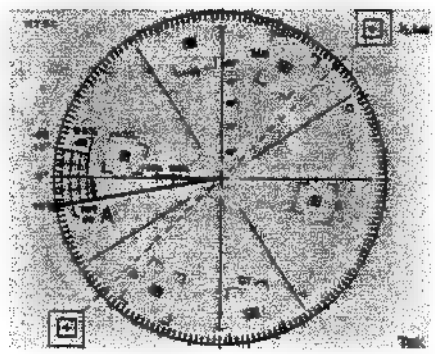

OK
 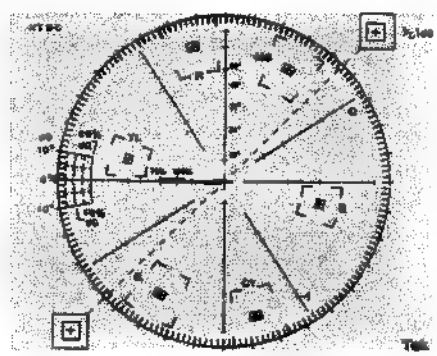

A = 0 ± 0.5 °

• Adjust ●RV805 so that the specification above is satisfied.</td><td>INT SC PHASE adjustment
● RV805/DA-95 (C-4)</td></tr>
<tr><td colspan="3">STEP-3
After this adjustment is completed, connect the GEN LOCK IN connector of the rear panel again.</td></tr>
</table>

(4-3-21. INT SC-H Adjustment (B B OUT))

FOR CE

<table>
<tr><th>Machine conditions for adjustment</th><th>Specifications</th><th>Adjusting Point</th></tr>
<tr><td colspan="3">STEP-1
• Connection: Section 4-2-1 Connection
• Extension board: Extend the DA-95 board with the EX-488 board.
• Disconnect the GEN LOCK IN connector of the rear panel.</td></tr>
<tr><td>STEP-2

• Vectorscope
100%
L. DISP : SCH
INPUT : CH-B
FILTER : FLAT
GAIN : VAR
REF : INT</td><td>B B OUT 4

NG
 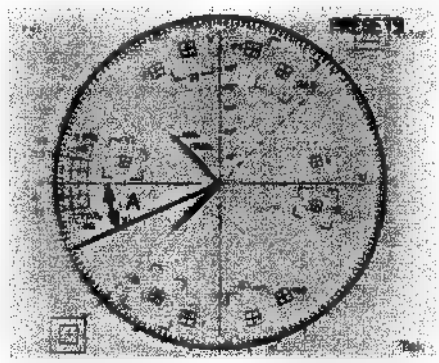

OK
 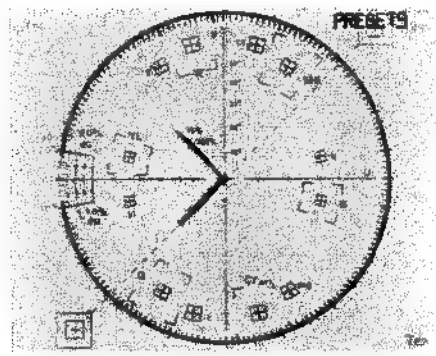

A = 0 ± 0.5 °

• Adjust ●RV805 so that the specification above is satisfied.</td><td>INT SC PHASE adjustment
● RV805/DA-95 (C-4)</td></tr>
<tr><td colspan="3">STEP-3
After this adjustment is completed, connect the GEN LOCK IN connector of the rear panel again.</td></tr>
</table>

4-3-22. B B OUTPUT GAIN Adjustment

FOR UC

Machine conditions for adjustment	Specifications	Adjusting Point
STEP-1 • Connection: Section 4-2-1 Connection • Extension board: Extend the DA-95 board with the EX-488 board.		
STEP-2 • (1) or (2) is used. (1) Waveform Monitor INPUT : CH-B MODE : WFM REF : EXT (2) Oscilloscope CH-1: 100 mV/DIV ▮ µs/DIV TRIG: B.B (CH-4)	B B OUT 4 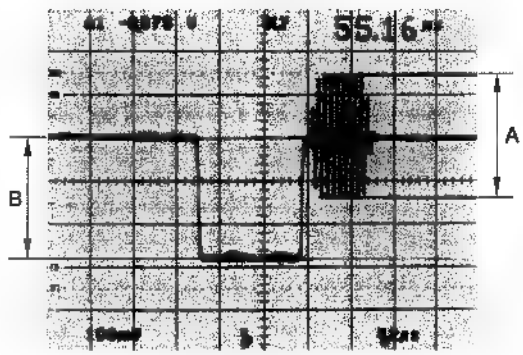 **A = 286 ± 4 mV** **B = 286 ± 4 mV**	A: B.B OUT GAIN adjustment ● RV800/DA-95 (C-3) B: SYNC LEVEL (B.B) adjustment ● RV807/DA-95 (C-3)

FOR CE

Machine conditions for adjustment	Specifications	Adjusting Point
STEP-1 • Connection: Section 4-2-1 Connection • Extension board: Extend the DA-95 board with the EX-488 board.		
STEP-2 • (1) or (2) is used. (1) Waveform Monitor INPUT : CH-B MODE : WFM REF : EXT (2) Oscilloscope CH-1: 100 mV/DIV ▮ µs/DIV TRIG: B.B (CH-4)	B B OUT 4 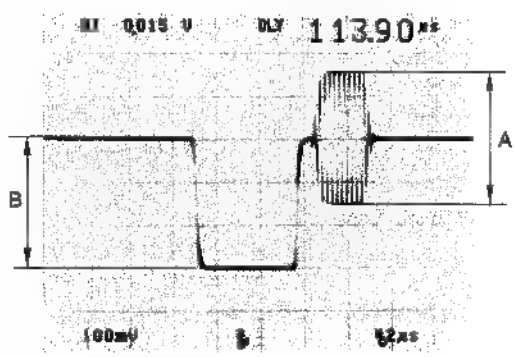 **A = 300 ± 4 mV** **B = 300 ± 4 mV**	A: B.B OUT GAIN adjustment ● RV800/DA-95 (C-3) B: SYNC LEVEL (B.B) adjustment ● RV807/DA-95 (C-3)

4-3-23. SYNC OUT LEVEL Adjustment

<table>
<tr><th>Machine conditions for adjustment</th><th>Specifications</th><th>Adjusting Point</th></tr>
<tr><td colspan="3">STEP-1
• Connection: Section 4-2-1 Connection
• Extension board: Extend the DA-95 board with the EX-488 board.
• Connect the 75 ohm terminator to the PROGRAM OUTPUT SYNC connector of the rear panel.</td></tr>
<tr><td>STEP-2

• Oscilloscope
CH-1: 1 V/DIV
10 µs/DIV</td><td>TP412/DA-95 (A-6)
 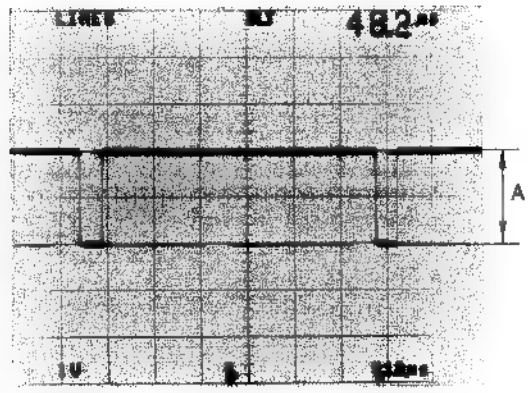

A = 2.0 ± 0.1 V</td><td>SYNC OUT LEVEL adjustment
● RV409/DA-95 (C-5)</td></tr>
<tr><td colspan="3">STEP-3
• After the adjustment is completed, disconnect the 75 ohm terminator.</td></tr>
</table>

4-4. DAC-20 BOARD ADJUSTMENT

4-4-1. COMPONENT RGB MATRIX LEVEL BALANCE Adjustment

<table>
<tr><th>Machine conditions for adjustment</th><th>Specifications</th><th>Adjusting Point</th></tr>
<tr><td colspan="3">STEP-1
• Connection: Section 4-2-1 Connection
• Extension board: Extend the DA-95 board with the EX-488 board and install the DAC-20 board on the DA-95 board.
• GUI setting
1. TITLER = 100CB_R. VPR (for UC) P100CB_R. VPR (for CE)
2. MONITOR FORMAT = RGB</td></tr>
<tr><td>STEP-2

• Oscilloscope
CH-1: 200 mV/DIV
20 µs/DIV
TRIG: TP412/DA-95 (A-6)</td><td>• TP206/DAC-20 (H-3)
Adjust to be the same level (±10 mV)
 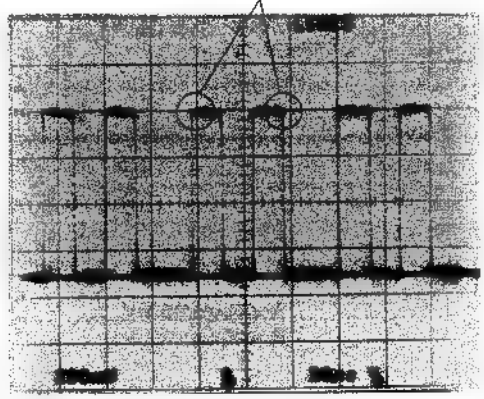 </td><td>● RV101/DAC-20 (E-2)</td></tr>
<tr><td>STEP-3

• Oscilloscope
CH-1: 200 mV/DIV
20 µs/DIV
TRIG: TP412/DA-95 (A-6)</td><td>• TP207/DAC-20 (H-2)
Adjust to be the same level (±10 mV)
 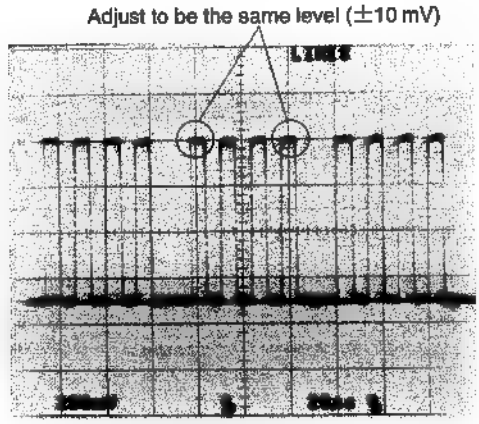 </td><td>● RV103/DAC-20 (E-1)</td></tr>
</table>

4-4-2. MONITOR OUTPUT G GAIN Adjustment

Machine conditions for adjustment	Specifications	Adjusting Point
STEP-1 • Connection: Section 4-2-1 Connection • Extension board: Extend the DA-95 board with the EX-488 board and install the DAC-20 board on the DA-95 board. • GUI setting 1. TITLER = 100CB_R. VPR (for UC) P100CB_R. VPR (for CE) 2. MONITOR FORMAT = RGB		
STEP-2 • (1) or (2) is used. (1) Waveform Monitor INPUT : CH-A1 MODE : WFM REF : EXT (2) Oscilloscope CH-1: 200 mV/DIV 10 µs/DIV TRIG: B.B (CH-4)	MONITOR OUTPUT G/Y 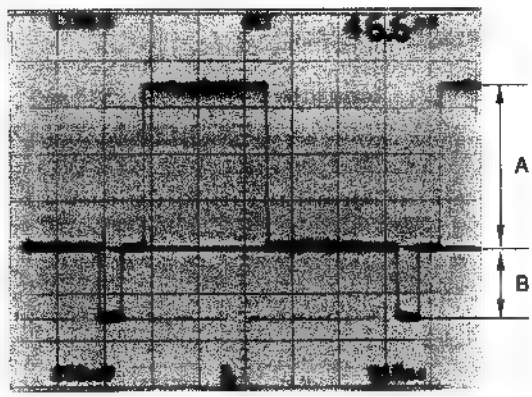 **A = 700 ± 10 mV** **B = 300 ± 5 mV**	A: G GAIN adjustment ● RV201/DAC-20 (E-4) B: SYNC LEVEL (G) adjustment ● RV208/DAC-20 (F-5)

4-4-3. MONITOR OUTPUT R GAIN Adjustment

Machine conditions for adjustment	Specifications	Adjusting Point
STEP-1 • Connection: Section 4-2-1 Connection • Extension board: Extend the DA-95 board with the EX-488 board and install the DAC-20 board on the DA-95 board. • GUI setting 1. TITLER = 100CB_R. VPR (for UC) P100CB_R. VPR (for CE) 2. MONITOR FORMAT = RGB		
STEP-2 • (1) or (2) is used. (1) Waveform Monitor INPUT : CH-A3 MODE : WFM REF : EXT (2) Oscilloscope CH-1: 200 mV/DIV 10 µs/DIV TRIG: B.B (CH-4)	MONITOR OUTPUT G/Y 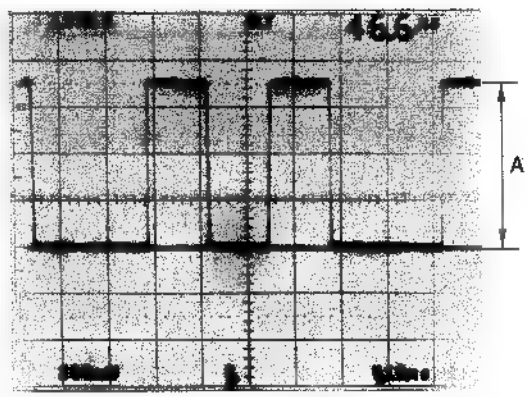 **A = 700 ± 10 mV**	R GAIN adjustment ● RV203/DAC-20 (F-3)

4-4-4. MONITOR OUTPUT B GAIN Adjustment

Machine conditions for adjustment	Specifications	Adjusting Point
STEP-1 • Connection: Section 4-2-1 Connection • Extension board: Extend the DA-95 board with the EX-488 board and install the DAC-20 board on the DA-95 board. • GUI setting 1. TITLER = 100CB_R. VPR (for UC) P100CB_R. VPR (for CE) 2. MONITOR FORMAT = RGB		
STEP-2 • (1) or (2) is used. (1) Waveform Monitor INPUT: CH-A2 MODE: WFM REF : EXT (2) Oscilloscope CH-1: 200 mV/DIV 10 µs/DIV TRIG: B.B (CH-4)	MONITOR OUTPUT B-Y/B 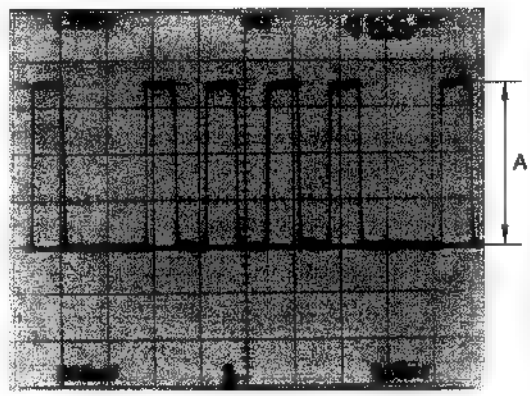 **A = 700 ± 10 mV**	■ GAIN adjustment ● RV205/DAC-20 (F-2)

4-4-5. MONITOR OUTPUT COMPONENT Y GAIN Adjustment

FOR UC

Machine conditions for adjustment	Specifications	Adjusting Point
STEP-1 • Connection: Section 4-2-1 Connection • Extension board: Extend the DA-95 board with the EX-488 board and install the DAC-20 board on the DA-95 board. • GUI setting 1. TITLER = 75CB_R. VPR 2. MONITOR FORMAT = YUV		
STEP-2 • (1) or (2) is used. (1) Waveform Monitor INPUT : CH-A1 MODE : WFM REF : EXT (2) Oscilloscope CH-1: 200 mV/DIV 10 µs/DIV TRIG: B.B (CH-4)	MONITOR OUTPUT G/Y 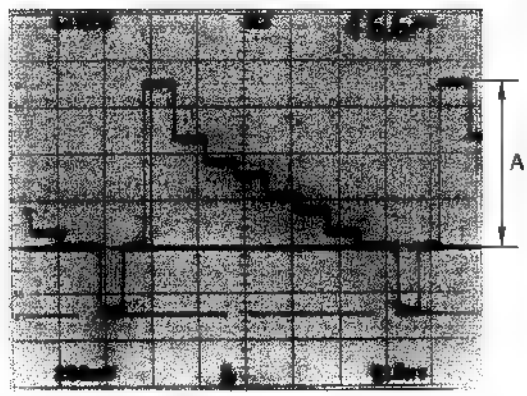 A = 714 ± 5 mV	Y GAIN adjustment ● RV202/DAC-20 (F-4)

FOR CE

Machine conditions for adjustment	Specifications	Adjusting Point
STEP-1 • Connection: Section 4-2-1 Connection • Extension board: Extend the DA-95 board with the EX-488 board and Install the DAC-20 board on the DA-95 board. • GUI setting 1. TITLER = P100CB_R. VPR 2. MONITOR FORMAT = YUV		
STEP-2 • (1) or (2) is used. (1) Waveform Monitor INPUT : CH-A1 MODE : WFM REF : EXT (2) Oscilloscope CH-1: 200 mV/DIV 10 µs/DIV TRIG: B.B (CH-4)	MONITOR OUTPUT G/Y 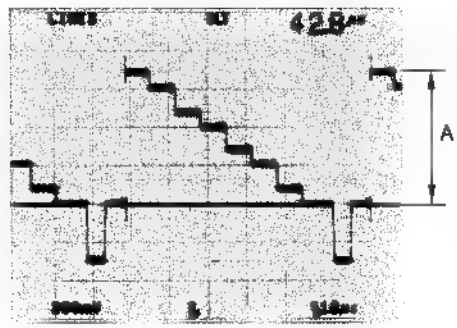 A = 700 ± 5 mV	Y GAIN adjustment ● RV202/DAC-20 (F-4)

4-4-6. MONITOR OUTPUT COMPONENT R-Y GAIN Adjustment

FOR UC

Machine conditions for adjustment	Specifications	Adjusting Point
STEP-1 • Connection: Section 4-2-1 Connection • Extension board: Extend the DA-95 board with the EX-488 board and install the DAC-20 board on the DA-95 board. • GUI setting 1. TITLER = 75CB_R. VPR 2. MONITOR FORMAT = YUV		
STEP-2 • (1) or (2) is used. (1) Waveform Monitor INPUT : CH-A3 MODE : WFM REF : EXT (2) Oscilloscope CH-1: 200 mV/DIV 10 µs/DIV TRIG: B.B (CH-4)	MONITOR OUTPUT R-Y/R 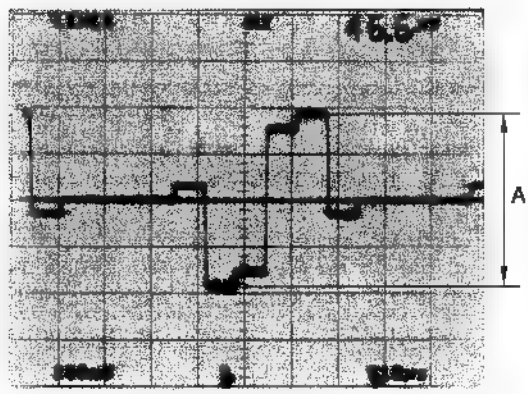 **A = 756 ± 5 mV p-p**	R-Y GAIN adjustment ● RV204/DAC-20 (G-3)

FOR CE

Machine conditions for adjustment	Specifications	Adjusting Point
STEP-1 • Connection: Section 4-2-1 Connection • Extension board: Extend the DA-95 board with the EX-488 board and install the DAC-20 board on the DA-95 board. • GUI setting 1. TITLER = P100CB_R. VPR 2. MONITOR FORMAT = YUV		
STEP-2 • (1) or (2) is used. (1) Waveform Monitor INPUT : CH-A3 MODE : WFM REF : EXT (2) Oscilloscope CH-1: 200 mV/DIV 10 µs/DIV TRIG: B.B (CH-4)	MONITOR OUTPUT R-Y/R 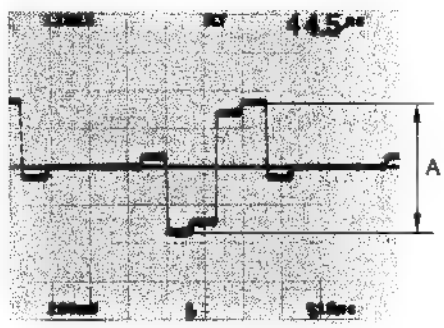 **A = 700 ± 5 mV p-p**	R-Y GAIN adjustment ● RV204/DAC-20 (G-3)

4-4-7. MONITOR OUTPUT COMPONENT B-Y GAIN Adjustment

FOR UC

Machine conditions for adjustment	Specifications	Adjusting Point
STEP-1 • Connection: Section 4-2-1 Connection • Extension board: Extend the DA-95 board with the EX-488 board and install the DAC-20 board on the DA-95 board. • GUI setting 1. TITLER = 75CB_R. VPR 2. MONITOR FORMAT = YUV		
STEP-2 • (1) or (2) Is used. (1) Waveform Monitor INPUT : CH-A2 MODE : WFM REF : EXT (2) Oscilloscope CH-1: 200 mV/DIV 10 µs/DIV TRIG: B.B (CH-4)	MONITOR OUTPUT B-Y/B 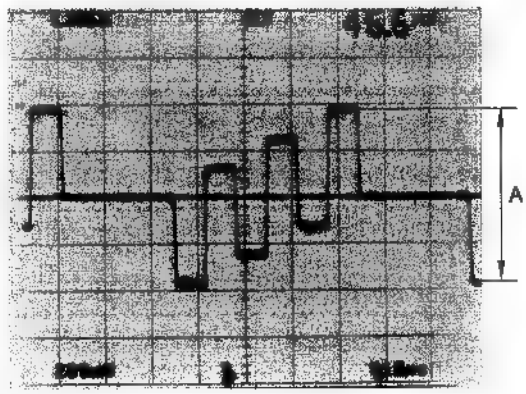 **A = 756 ± 5 mV p-p**	B-Y GAIN adjustment ● RV206/DAC-20 (G-2)

FOR CE

Machine conditions for adjustment	Specifications	Adjusting Point
STEP-1 • Connection: Section 4-2-1 Connection • Extension board: Extend the DA-95 board with the EX-488 board and install the DAC-20 board on the DA-95 board. • GUI setting 1. TITLER = P100CB_R. VPR 2. MONITOR FORMAT = YUV		
STEP-2 • (1) or (2) is used. (1) Waveform Monitor INPUT : CH-A2 MODE : WFM REF : EXT (2) Oscilloscope CH-1: 200 mV/DIV 10 µs/DIV TRIG: B.B (CH-4)	MONITOR OUTPUT B-Y/B 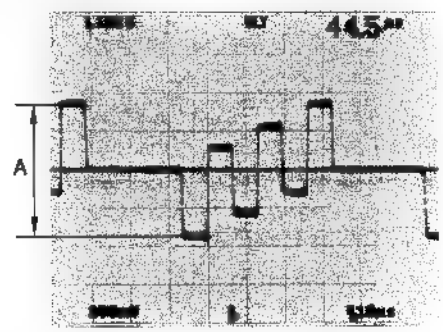 **A = 700 ± 5 mV p-p**	B-Y GAIN adjustment ● RV206/DAC-20 (G-2)

4-4-8. Y/R-Y DELAY Adjustment

Machine conditions for adjustment	Specifications	Adjusting Point
STEP-1 • Connection: Section 4-2-1 Connection • Extension board: Extend the DA-95 board with the EX-488 board and install the DAC-20 board on the DA-95 board. • GUI setting 1. TITLER = BOWTIE. VPR (for UC) PBOWTIE. VPR (for CE) 2. MONITOR FORMAT = YUV		
STEP-2 • Oscilloscope CH-1: 100 mV/DIV CH-2: 200 mV/DIV 10 µs/DIV TRIG: B.B (CH-4) MODE: INVERT. ADD	CH-1: TP203/DAC-20 (H-4) CH-2: TP206/DAC-20 (H-3) 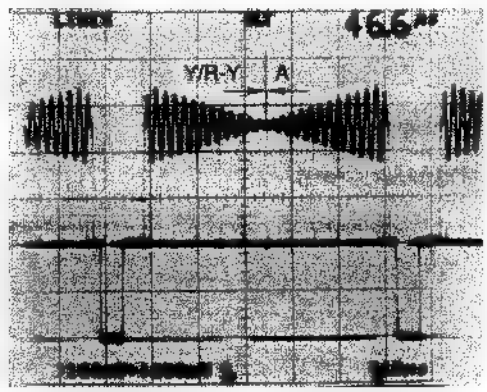 **A = 0 ± 10 ns**	Y/R-Y DELAY adjustment ● RV100/DAC-20 (D-2)

4-4-9. Y/B-Y DELAY Adjustment

Machine conditions for adjustment	Specifications	Adjusting Point
STEP-1 • Connection: Section 4-2-1 Connection • Extension board: Extend the DA-95 board with the EX-488 board and install the DAC-20 board on the DA-95 board. • GUI setting 1. TITLER = BOWTIE. VPR (for UC) PBOWTIE. VPR (for CE) 2. MONITOR FORMAT = YUV		
STEP-2 • Oscilloscope CH-1: 100 mV/DIV CH-2: 200 mV/DIV 10 µs/DIV TRIG: B.B (CH-4) MODE: INVERT. ADD	CH-1: TP203/DAC-20 (H-4) CH-2: TP207/DAC-20 (H-2) 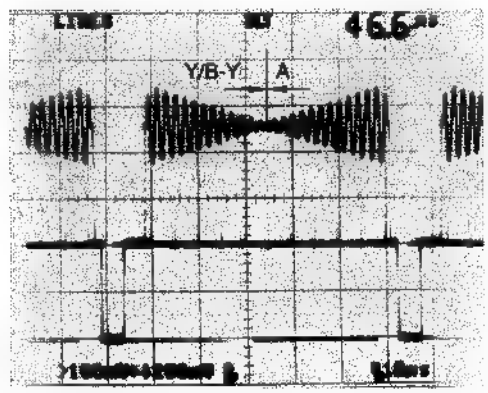 **A = 0 ± 10 ns**	Y/B-Y DELAY adjustment ● RV102/DAC-20 (D-1)

4-5. AD-115 BOARD ADJUSTMENT

4-5-1. COMPONENT Y LEVEL Adjustment

FOR UC

NOTE: Perform this adjustment after completing all the adjustments for the DA-95 board.

<table>
<tr><th>Machine conditions for adjustment</th><th>Specifications</th><th>Adjusting Point</th></tr>
<tr><td colspan="3">STEP-1
• Connection: Section 4-2-1 Connection
• Extension board: Extend the AD-115 board with the EX-488 board.
• Test signal: 75% Color Bars (100/7.5/77/7.5 Color Bars)
• GUI setting
1. VIN 1 = Analog Player 2
2. AP2 Format = Component

NOTE: Adjust VIN1 and VIN2 in the same way for each bus.</td></tr>
<tr><td>STEP-2

• Waveform monitor
INPUT: CH-A1
MODE: WFM</td><td>PROGRAM OUTPUT Y/G
 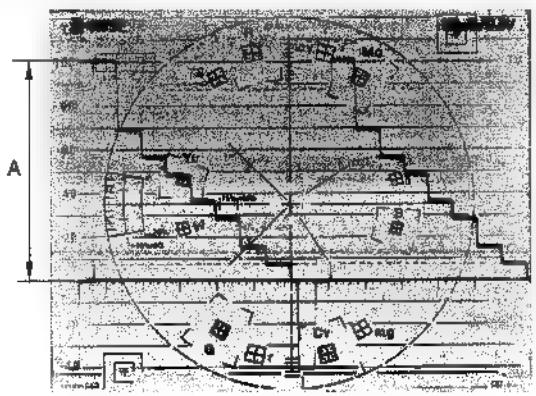

A = 714 ± 20 mV</td><td>VIN1: CPNT Y GAIN adjustment
⊘ RV300/AD-115 (G-3)

VIN2: CPNT Y GAIN adjustment
⊘ RV600/AD-115 (G-9)</td></tr>
</table>

(4-5-1. COMPONENT Y LEVEL Adjustment)

FOR CE

NOTE: Perform this adjustment after completing all the adjustments for the DA-95 board.

Machine conditions for adjustment	Specifications	Adjusting Point
STEP-1 • Connection: Section 4-2-1 Connection • Extension board: Extend the AD-115 board with the EX-488 board. • Test signal: 100% Color Bars (100/0/100/0 Color Bars) • GUI setting 1. VIN 1 = Analog Player 2 2. AP2 Format = Component NOTE: Adjust VIN1 and VIN2 in the same way for each bus.		
STEP-2 • Waveform monitor INPUT: CH-A1 MODE: WFM	PROGRAM OUTPUT Y/G 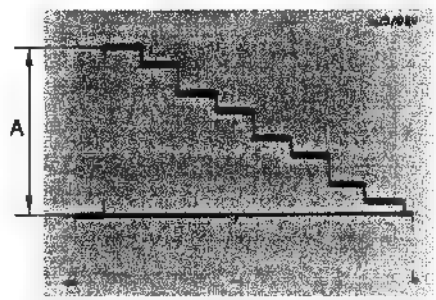 **A = 700 ± 20 mV**	VIN1: CPNT Y GAIN adjustment ● RV300/AD-115 (G-3) VIN2: CPNT Y GAIN adjustment ● RV600/AD-115 (G-9)

4-5-2. COMPONENT CHROMA LEVEL Adjustment

FOR UC

NOTE: Perform this adjustment after completing all the adjustments for the DA-95 board.

Machine conditions for adjustment	Specifications	Adjusting Point
STEP-1 • Connection: Section 4-2-1 Connection • Extension board: Extend the AD-115 board with the EX-488 board. • Test signal: 75% Color Bars (100/7.5/77/7.5 Color Bars) • GUI setting 1. VIN 1 = Analog Player ▮ 2. AP2 Format = Component NOTE: Adjust VIN1 and VIN2 in the same way for each bus.		
STEP-2 • Waveform monitor INPUT: CH-A3 MODE: WFM	PROGRAM OUTPUT R-Y/R 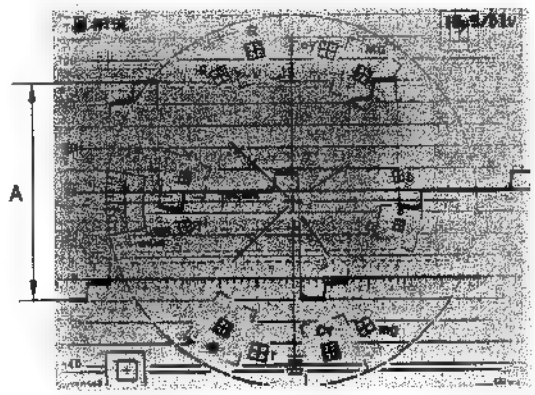 **A = 700 ± 20 mV p-p**	VIN1: CPNT R-Y GAIN adjustment ● RV302/AD-115 (H-3) VIN2: CPNT R-Y GAIN adjustment ● RV602/AD-115 (H-9)
STEP-3 • Waveform monitor INPUT: CH-A2 MODE: WFM	PROGRAM OUTPUT B-Y/B 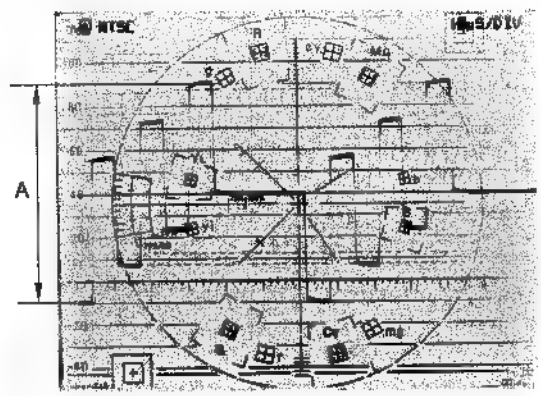 **A = 700 ± 20 mV p-p**	VIN1: CPNT B-Y GAIN adjustment ● RV304/AD-115 (H-3) VIN2: CPNT B-Y GAIN adjustment ● RV604/AD-115 (H-9)

(4-5-2. COMPONENT CHROMA LEVEL Adjustment)

FOR CE

NOTE: Perform this adjustment after completing all the adjustments for the DA-95 board.

Machine conditions for adjustment	Specifications	Adjusting Point
STEP-1 • Connection: Section 4-2-1 Connection • Extension board: Extend the AD-115 board with the EX-488 board. • Test signal: 100% Color Bars (100/0/100/0 Color Bars) • GUI setting 1. VIN 1 = Analog Player 2 2. AP2 Format = Component NOTE: Adjust VIN1 and VIN2 in the same way for each bus.		
STEP-2 • Waveform monitor INPUT: CH-A3 MODE: WFM	PROGRAM OUTPUT R-Y/R 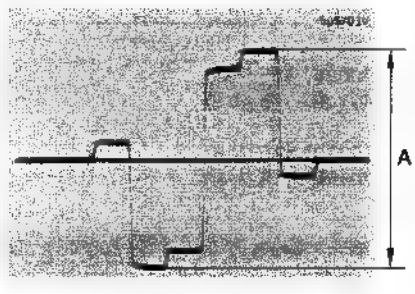 **A = 700 ± 20 mV p-p**	VIN1: CPNT R-Y GAIN adjustment ● RV302/AD-115 (C-11) VIN2: CPNT R-Y GAIN adjustment ● RV602/AD-115 (H-9)
STEP-3 • Waveform monitor INPUT: CH-A2 MODE: WFM	PROGRAM OUTPUT B-Y/B 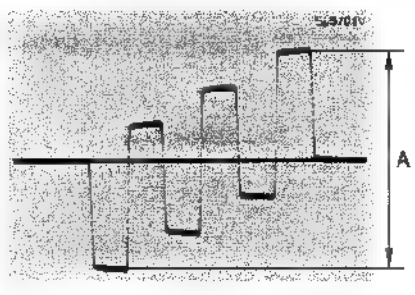 **A = 700 ± 20 mV p-p**	VIN1: CPNT B-Y GAIN adjustment ● RV302/AD-115 (C-11) VIN2: CPNT B-Y GAIN adjustment ● RV602/AD-115 (H-9)

4-5-3. W HD PHASE Adjustment

FOR UC

Machine conditions for adjustment	Specifications	Adjusting Point
STEP-1 • Connection: Section 4-2-1 Connection • Extension board: Extend the AD-115 board with the EX-488 board. • Test signal: 75% Color Bars (100/7.5/77/7.5 Color Bars) • GUI setting 1. VIN 1 = Analog Player 2 2. AP2 Format = Component NOTE: Adjust VIN1 and VIN2 in the same way for each bus.		
STEP-2 • Digital voltmeter	VIN1: TP403/AD-115 (I-2) VIN2: TP703/AD-115 (I-8) **4.0 ± 0.1 V dc**	VIN1: VCO BIAS adjustment ● LV400/AD-115 (I-1) VIN2: VCO BIAS adjustment ● LV700/AD-115 (I-9)
STEP-3 • Oscilloscope CH-1: 5 V/DIV 10 µs/DIV CH-2: 2 V/DIV 200 ms/DIV TRIG: CH-2-	VIN1 CH-1: TP400/AD-115 (K-3) CH-2: TP401/AD-115 (K-2) VIN2 CH-1: TP700/AD-115 (K-8) CH-2: TP701/AD-115 (K-8) 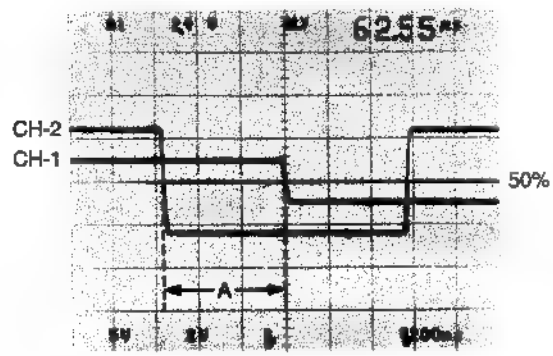 CH-2 CH-1 50% A **A = 560 ± 10 ns**	VIN1: W HD PHASE adjustment ● RV400/AD-115 (J-3) VIN2: W HD PHASE adjustment ● RV700/AD-115 (J-8)

(4-5-3. W HD PHASE Adjustment)

FOR CE

Machine conditions for adjustment	Specifications	Adjusting Point
STEP-1 • Connection: Section 4-2-1 Connection • Extension board: Extend the AD-115 board with the EX-488 board. • Test signal: 100% Color Bars (100/0/100/0 Color Bars) • GUI setting 1. VIN 1 = Analog Player 2 2. AP2 Format = Component NOTE: Adjust VIN1 and VIN2 in the same way for each bus.		
STEP-2 • Digital voltmeter	VIN1: TP403/AD-115 (I-2) VIN2: TP703/AD-115 (I-8) **4.0 ± 0.1 V dc**	VIN1: VCO BIAS adjustment ● LV400/AD-115 (I-1) VIN2: VCO BIAS adjustment ● LV700/AD-115 (I-9)
STEP-3 • Oscilloscope CH-1: 5 V/DIV 10 µs/DIV CH-2: 2 V/DIV 200 ms/DIV TRIG: CH-2-	VIN1 CH-1: TP400/AD-115 (K3) CH-2: TP401/AD-115 (K2) VIN2 CH-1: TP700/AD-115 (K-8) CH-2: TP701/AD-115 (K-8) 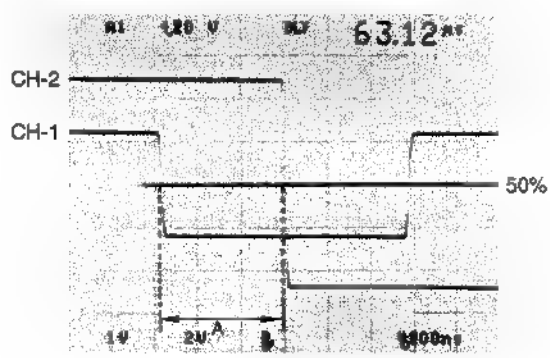 **A = 560 ± 10 ns**	VIN1: W HD PHASE adjustment ● RV400/AD-115 (J-3) VIN2: W HD PHASE adjustment ● RV700/AD-115 (J-8)

4-5-4. COMPONENT Y/C DELAY Adjustment

NOTE: Perform this adjustment after completing all the adjustments for the DA-95 board.

<table>
<tr><th>Machine conditions for adjustment</th><th>Specifications</th><th>Adjusting Point</th></tr>
<tr><td colspan="3">STEP-1
• Connection: Section 4-2-1 Connection
• Extension board: Extend the AD-115 board with the EX-488 board.
• Test signal: BOWTIE
• GUI setting
1. VIN 1 = Analog Player 2
2. AP2 Format = Component

NOTE: Adjust VIN1 and VIN2 in the same way for each bus.</td></tr>
<tr><td>STEP-2

• Waveform monitor
MEASURE: BOWTIE
INPUT : CH-A1 (Y/G)
CH-A2 (R-Y/R)
CH-A3 (B-Y/B)
MODE : BOWTIE</td><td>CH-A1: PROGRAM OUTPUT Y/G
CH-A2: PROGRAM OUTPUT R-Y/R
CH-A3: PROGRAM OUTPUT B-Y/B
 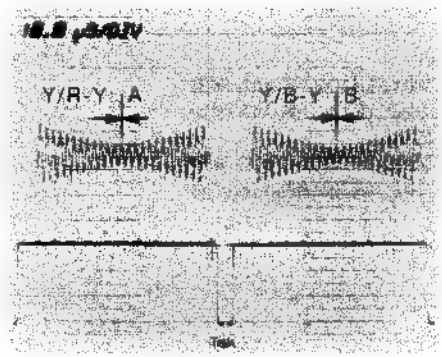

A = 0 ± 10 ns
• Set the each BOWTIE DIP point A and B on the center marker.</td><td>Y/R-Y DELAY
VIN1: CPNT V DL adjustment
● RV306/AD-115 (H-2)

VIN2: CPNT V DL adjustment
● RV606/AD-115 (H-11)

NOTE: Do not touch adjusting points other than the above.</td></tr>
<tr><td>STEP-3

• Waveform monitor
MEASURE: BOWTIE
INPUT : CH-A1 (Y/G)
CH-A2 (R-Y/R)
CH-A3 (B-Y/B)
MODE : BOWTIE</td><td>CH-A1: PROGRAM OUTPUT Y/G
CH-A2: PROGRAM OUTPUT R-Y/R
CH-A3: PROGRAM OUTPUT B-Y/B
 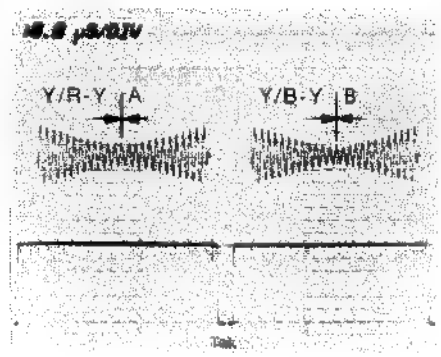

A = 0 ± 10 ns
• Set the each BOWTIE DIP point A and B on the center marker.</td><td>Y/B-Y DELAY
VIN1: CPNT U DL adjustment
● RV307/AD-115 (I-2)

VIN2: CPNT U DL adjustment
● RV607/AD-115 (H-11)

NOTE: Do not touch adjusting points other than the above.</td></tr>
</table>

4-5-5. AUX COMPONENT Y LEVEL Adjustment

FOR UC

NOTE: Perform this adjustment after completing all the adjustments for the DA-95 board.

<table>
<tr><th>Machine conditions for adjustment</th><th>Specifications</th><th>Adjusting Point</th></tr>
<tr><td colspan="3">STEP-1
• Connection: Section 4-2-1 Connection
• Extension board: Extend the AD-115 board with the EX-488 board.
• Test signal: 75% Color Bars (100/7.5/77/7.5 Color Bars)
• GUI setting
1. VIN 1 = Analog AUX
2. AUX Format = YUV

NOTE: Adjust VIN1 and VIN2 in the same way for each bus.</td></tr>
<tr><td>STEP-2

• Waveform monitor
INPUT: CH-A1
MODE: WFM</td><td>PROGRAM OUTPUT Y/G
 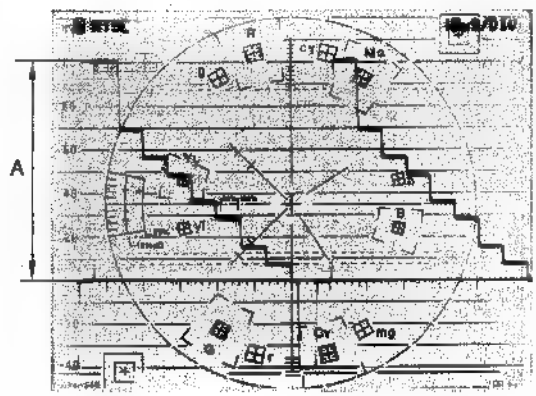

A = 714 ± 20 mV</td><td>VIN1: CPNT Y GAIN adjustment
● RV101/AD-115 (A-5)</td></tr>
</table>

(4-5-5. AUX COMPONENT Y LEVEL Adjustment)

FOR CE

NOTE: Perform this adjustment after completing all the adjustments for the DA-95 board.

Machine conditions for adjustment	Specifications	Adjusting Point
STEP-1 • Connection: Section 4-2-1 Connection • Extension board: Extend the AD-115 board with the EX-488 board. • Test signal: 100% Color Bars (100/0/100/0 Color Bars) • GUI setting 1. VIN 1 = Analog AUX 2. AUX Format = YUV NOTE: Adjust VIN1 and VIN2 in the same way for each bus.		
STEP-2 • Waveform monitor INPUT: CH-A1 MODE: WFM	PROGRAM OUTPUT Y/G 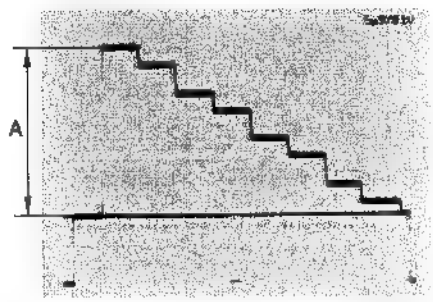 **A = 700 ± 20 mV**	VIN1: CPNT Y GAIN adjustment ● RV101/AD-115 (A-5)

4-5-6. AUX COMPONENT CHROMA LEVEL Adjustment

FOR UC

NOTE: Perform this adjustment after completing all the adjustments for the DA-95 board.

Machine conditions for adjustment	Specifications	Adjusting Point
STEP-1 • Connection: Section 4-2-1 Connection • Extension board: Extend the AD-115 board with the EX-488 board. • Test signal: 75% Color Bars (100/7.5/77/7.5 Color Bars) • GUI setting 1. VIN 1 = Analog AUX 2. AUX Format = YUV NOTE: Adjust VIN1 and VIN2 in the same way for each bus.		
STEP-2 • Waveform monitor INPUT: CH-A3 MODE: WFM	PROGRAM OUTPUT R-Y/R 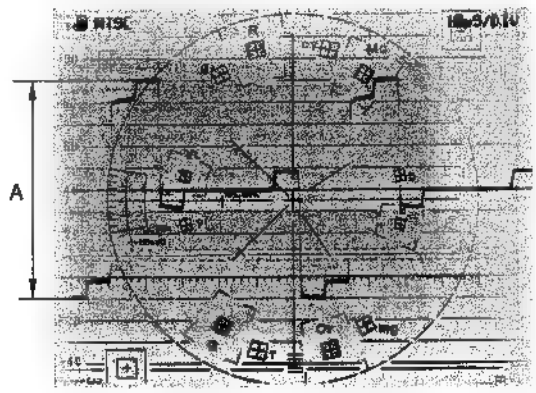 **A = 700 ± 20 mV p-p**	VIN1: CPNT R-Y GAIN adjustment ● RV104/AD-115 (B-5)
STEP-3 • Waveform monitor INPUT: CH-A2 MODE: WFM	PROGRAM OUTPUT B-Y/B 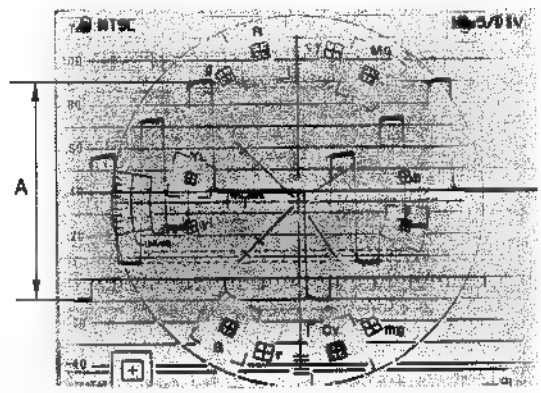 **A = 700 ± 20 mV p-p**	VIN1: CPNT B-Y GAIN adjustment ● RV107/AD-115 (C-5)

(4-5-6. AUX COMPONENT CHROMA LEVEL Adjustment)

FOR CE

NOTE: Perform this adjustment after completing all the adjustments for the DA-95 board.

<table>
<tr><th>Machine conditions for adjustment</th><th>Specifications</th><th>Adjusting Point</th></tr>
<tr><td colspan="3">STEP-1
• Connection: Section 4-2-1 Connection
• Extension board: Extend the AD-115 board with the EX-488 board.
• Test signal: 100% Color Bars (100/0/100/0 Color Bars)
• GUI setting
1. VIN 1 = Analog AUX
2. AUX Format = YUV

NOTE: Adjust VIN1 and VIN2 in the same way for each bus.</td></tr>
<tr><td>STEP-2

• Waveform monitor
INPUT: CH-A3
MODE: WFM</td><td>PROGRAM OUTPUT R-Y/R
 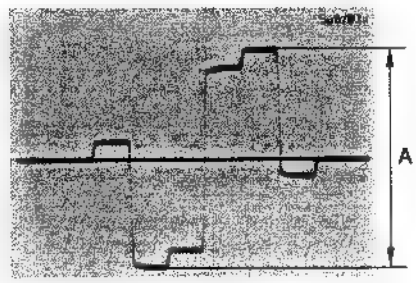

A = 700 ± 20 mV p-p</td><td>VIN1: CPNT R-Y GAIN adjustment
● RV104/AD-115 (B-5)</td></tr>
<tr><td>STEP-3

• Waveform monitor
INPUT: CH-A2
MODE: WFM</td><td>PROGRAM OUTPUT B-Y/B
 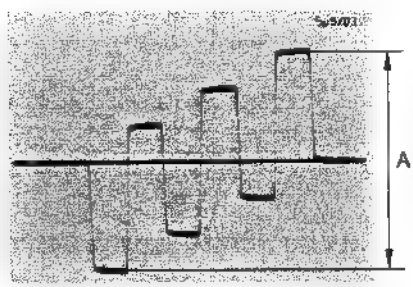

A = 700 ± 20 mV p-p</td><td>VIN1: CPNT B-Y GAIN adjustment
● RV107/AD-115 (C-5)</td></tr>
</table>

4-5-7. Y/C Input Y LEVEL Adjustment

FOR UC

NOTE: Perform this adjustment after completing all the adjustments for the DA-95 board.

Machine conditions for adjustment	Specifications	Adjusting Point
STEP-1 • Connection: Section 4-2-1 Connection • Extension board: Extend the AD-115 board with the EX-488 board. • Test signal: Y/C (S), 75% Color Bars (100/7.5/77/7.5 Color Bars) • GUI setting 1. VIN 1 = Analog Player 1 2. AP1 Format = S-Video NOTE: Adjust VIN1 and VIN2 in the same way for each bus.		
STEP-2 • Waveform monitor INPUT: CH-A MODE: WFM	PROGRAM OUTPUT Y/G 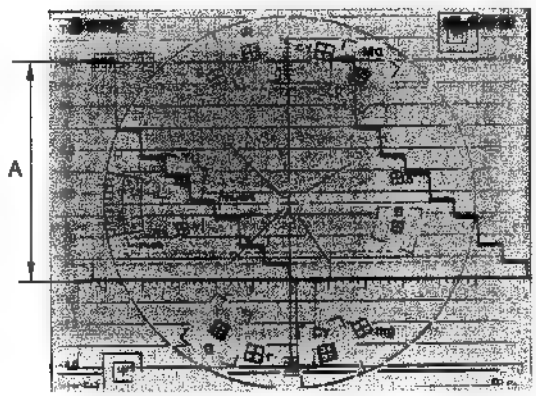 **A = 714 ± 20 mV**	VIN1: SEP Y GAIN adjustment ● RV202/AD-115 (F-3) VIN2: SEP Y GAIN adjustment ● RV506/AD-115 (F-10)

4-5-7. Y/C Input Y LEVEL Adjustment

FOR CE

NOTE: Perform this adjustment after completing all the adjustments for the DA-95 board.

Machine conditions for adjustment	Specifications	Adjusting Point
STEP-1 • Connection: Section 4-2-1 Connection • Extension board: Extend the AD-115 board with the EX-488 board. • Test signal: Y/C (S), 100% Color Bars (100/0/100/0 Color Bars) • GUI setting 1. VIN 1 = Analog Player 1 2. AP1 Format = S-Video NOTE: Adjust VIN1 and VIN2 in the same way for each bus.		
STEP-2 • Waveform monitor INPUT: CH-A MODE: WFM	PROGRAM OUTPUT Y/G 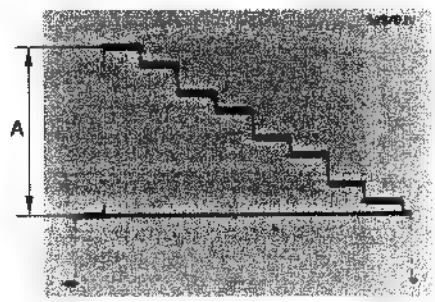 **A = 700 ± 20 mV**	VIN1: SEP Y GAIN adjustment ● RV202/AD-115 (F-3) VIN2: SEP Y GAIN adjustment ● RV506/AD-115 (F-10)

4-5-8. CHROMA DECODER CLOCK FREQUENCY Adjustment

FOR UC

<table>
<tr><th>Machine conditions for adjustment</th><th>Specifications</th><th>Adjusting Point</th></tr>
<tr><td colspan="3">STEP-1
• Connection: Section 4-2-1 Connection
• Extension board: Extend the AD-115 board with the EX-488 board.
• Test signal: 75% Color Bars (100/7.5/77/7.5 Color Bars)
• GUI setting
1. VIN 1 = Analog Player 1
2. AP1 Format = S-Video

NOTE: Adjust VIN1 and VIN2 in the same way for each bus.</td></tr>
<tr><td>STEP-2

• Oscilloscope
CH-1: 20 mV/DIV
20 µs/DIV
TRIG: B. B (CH-4)</td><td>VIN1: TP205/AD-115 (C-1)
VIN2: TP505/AD-115 (D-11)

NG
 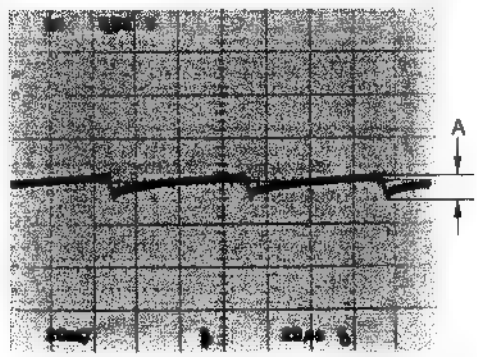

OK
 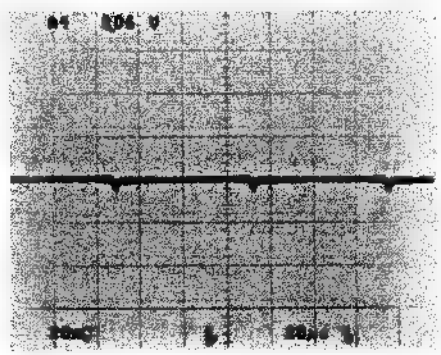

A = Minimum</td><td>VIN1: COLOR F LOCK adjustment
● CV200/AD-115 (D-2)

VIN2: COLOR F LOCK adjustment
● CV500/AD-115 (D-11)</td></tr>
</table>

(4-5-8. CHROMA DECODER CLOCK FREQUENCY Adjustment)

FOR CE

<table>
<tr><th>Machine conditions for adjustment</th><th>Specifications</th><th>Adjusting Point</th></tr>
<tr><td colspan="3">STEP-1
• Connection: Section 4-2-1 Connection
• Extension board: Extend the AD-115 board with the EX-488 board.
• Test signal: 100% Color Bars (100/0/100/0 Color Bars)
• GUI setting
1. VIN 1 = Analog Player 1
2. AP1 Format = S-Video

NOTE: Adjust VIN1 and VIN2 in the same way for each bus.</td></tr>
<tr><td>STEP-2

• Oscilloscope
CH-1: 20 mV/DIV
500 µs/DIV
TRIG: B. B (CH-4)</td><td>VIN1: TP205/AD-115 (C-1)
VIN2: TP505/AD-115 (D-11)

NG
 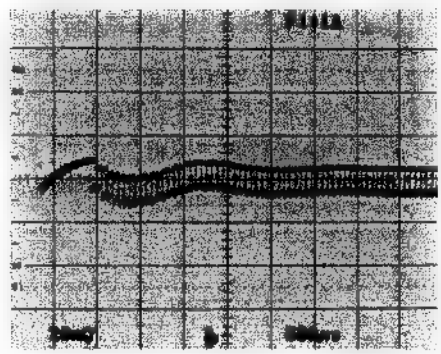

OK
 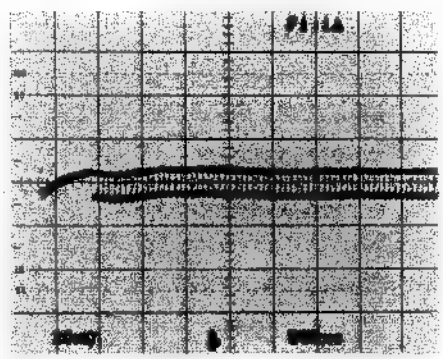

• Adjust so that waveforme becomes flat as possible.</td><td>VIN1: COLOR F LOCK adjustment
● CV200/AD-115 (D-2)

VIN2: COLOR F LOCK adjustment
● CV500/AD-115 (D-11)</td></tr>
</table>

4-5-9. Y/C CHROMA LEVEL Adjustment

FOR UC

NOTE: Perform this adjustment after completing all the adjustments for the DA-95 board.

<table>
<tr><th>Machine conditions for adjustment</th><th>Specifications</th><th>Adjusting Point</th></tr>
<tr><td colspan="3">STEP-1
• Connection: Section 4-2-1 Connection
• Extension board: Extend the AD-115 board with the EX-488 board.
• Test signal: Y/C (S), 75% Color Bars (100/7.5/77/7.5 Color Bars)
• GUI setting
1. VIN 1 = Analog Player 1
2. AP1 Format = S-Video

NOTE: Adjust VIN1 and VIN2 in the same way for each bus.</td></tr>
<tr><td>STEP-2
• Adjust the phase of the chroma.
VIN1: ⊘RV205
VIN2: ⊘RV504
• Adjust in the vertical direction.
VIN1: ⊘RV204
VIN2: ⊘RV503
• Adjust in the horizontal direction.
VIN1: ⊘RV206
VIN2: ⊘RV505

• Vectorscope
L.DISP: VECT
INPUT : CH-A</td><td>PROGRAM OUTPUT G/Y

NG
 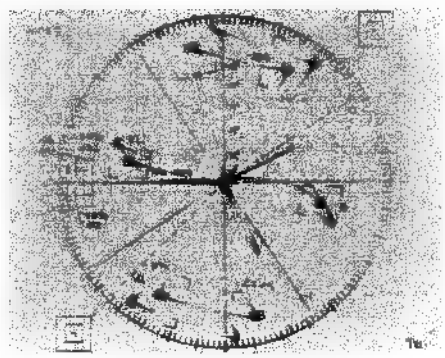

OK
 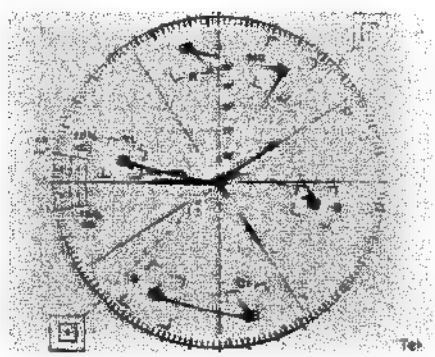

All luminance points should be inside the respective " ⊞" mark on the vectorscope.

• Adjust so that both the phase and the level VIN1 and VIN2 of become equal.</td><td>VIN1:
SEP C GAIN adjustment
⊘ RV204/AD-115(C-2)

CPST & SEP HUE SET adjustment
⊘ RV205/AD-115(D-2)

SEP B-Y GAIN adjustment
⊘ RV206/AD-115(F-2)

VIN2:
SEP C GAIN adjustment
⊘ RV503/AD-115(C-11)

CPST & SEP HUE SET adjustment
⊘ RV504/AD-115(D-11)

SEP B-Y GAIN adjustment
⊘ RV505/AD-115(F-10)</td></tr>
</table>

(4-5-9. Y/C CHROMA LEVEL Adjustment)

FOR CE

NOTE: Perform this adjustment after completing all the adjustments for the DA-95 board.

<table>
<tr><th>Machine conditions for adjustment</th><th>Specifications</th><th>Adjusting Point</th></tr>
<tr><td colspan="3">STEP-1
• Connection: Section 4-2-1 Connection
• Extension board: Extend the AD-115 board with the EX-486 board.
• Test signal: Y/C (S), 100% Color Bars (100/0/100/0 Color Bars)
• GUI setting
1. VIN 1 = Analog Player 1
2. AP1 Format = S-Video

NOTE: Adjust VIN1 and VIN2 in the same way for each bus.</td></tr>
<tr><td>STEP-2
• Adjust the phase of the chroma.
VIN1: ⊘RV205
VIN2: ⊘RV504
• Adjust in the vertical direction.
VIN1: ⊘RV204
VIN2: ⊘RV503
• Adjust in the horizontal direction.
VIN1: ⊘RV206
VIN2: ⊘RV505

• Vectorscope
L.DISP : VECT
INPUT : CH-A</td><td>PROGRAM OUTPUT G/Y
NG
 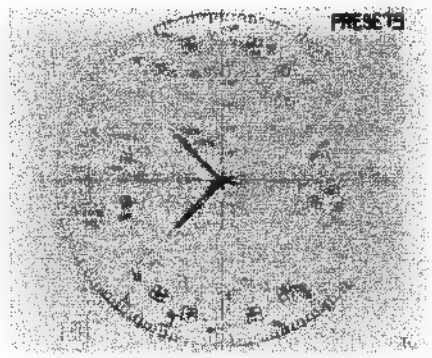
OK
 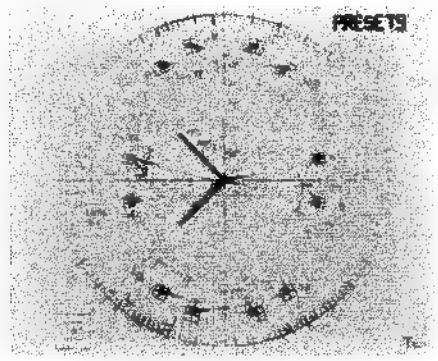
All luminance points should be inside the respective " ⊞" mark on the vectorscope.
• Adjust so that both the phase and the level VIN1 and VIN2 of become equal.</td><td>VIN1:
SEP C GAIN adjustment
⊘ RV204/AD-115(C-2)

CPST & SEP HUE SET adjustment
⊘ RV205/AD-115(D-2)

SEP B-Y GAIN adjustment
⊘ RV206/AD-115(F-2)

VIN2:
SEP C GAIN adjustment
⊘ RV503/AD-115(C-11)

CPST & SEP HUE SET adjustment
⊘ RV504/AD-115(D-11)

SEP B-Y GAIN adjustment
⊘ RV505/AD-115(F-10)</td></tr>
</table>

4-5-10. APC LOCK Adjustment

Machine conditions for adjustment	Specifications	Adjusting Point
STEP-1 • Connection: Section 4-2-1 Connection • Extension board: Extend the AD-115 board with the EX-488 board. • Test signal: 75% Color Bars (100/7.5/77/7.5 Color Bars) • GUI setting 1. VIN 1 = Analog Player 1 2. AP1 Format = Composite NOTE: Adjust VIN1 and VIN2 in the same way for each bus.		
STEP-2 • Digital voltmeter	VIN1: TP202/AD-115(D-4) VIN2: TP502/AD-115(D-8) 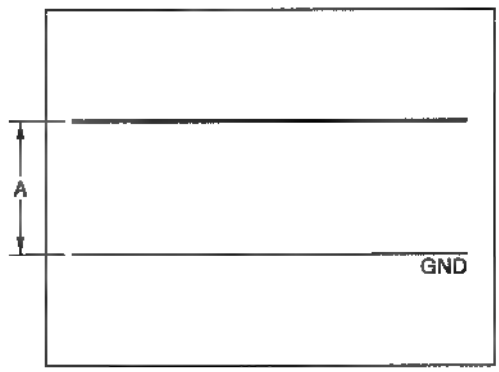 **A = 4.0 ± 0.5 Vdc** • Turn VIN1: ⊘RV203 or VIN2: ⊘RV500 In the clockwise direction fully and check that the specification above is satisfied.	VIN1: APC LOCK adjustment ⊘ RV203/AD-115(D-4) VIN2: APC LOCK adjustment ⊘ RV500/AD-115(D-8)

(4-5-10. APC LOCK Adjustment)

Machine conditions for adjustment	Specifications	Adjusting Point
STEP-3 • Digital voltmeter	VIN1: TP202/AD-115(D-4) VIN2: TP502/AD-115(D-8) 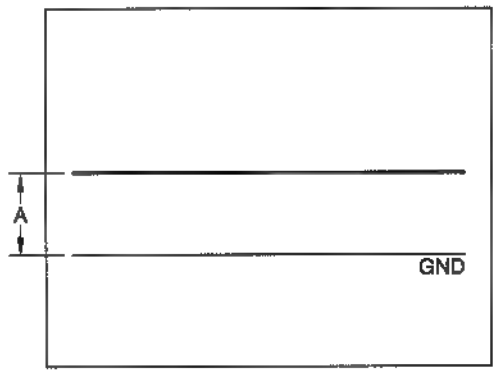 **A = 2.5 ± 0.4 Vdc** • Turn VIN1: ⊘RV203 or VIN2: ⊘RV500 in the counterclockwise direction fully until the level is drawn into the vicinity of 2.5 V. (color lock condirion)	VIN1: APC LOCK adjustment ⊘ RV203/AD-115(D-4) VIN2: APC LOCK adjustment ⊘ RV500/AD-115(D-8)
STEP-4 • Disconnect the PLAYER1 INPUT Y/COMP BNC connector. • Digital voltmeter	VIN1: TP202/AD-115(D4) VIN2: TP502/AD-115(D8) • Check that the level becomes approximately 0 V, re-connect the BNC connector of PLAYER1 INPUT Y/COMP and check that the level is satisfied with the specification of STEP-3.	(Check)

4-5-11. COMPOSITE Y LEVEL Adjustment

FOR UC

Machine conditions for adjustment	Specifications	Adjusting Point
STEP-1 • Connection: Section 4-2-1 Connection • Extension board: Extend the AD-115 board with the EX-488 board. • Test signal: 75% Color Bars (100/7.5/77/7.5 Color Bars) • GUI setting 1. VIN 1 = Analog Player 1 2. AP1 Format = Composite NOTE: Adjust VIN1 and VIN2 in the same way for each bus.		
STEP-2 • Waveform monitor INPUT: CH-A MODE: WFM	PROGRAM OUTPUT G/Y 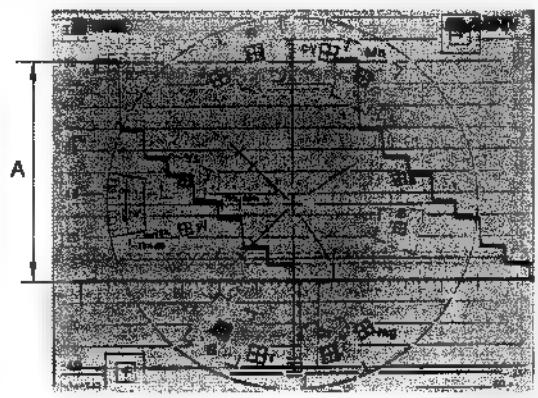 **A = 714 ± 20 mV**	VIN1: CPST Y GAIN adjustment ⊘ RV200/AD-115 (F-5) VIN2: CPST Y GAIN adjustment ⊘ RV501/AD-115 (F-9)

(4-5-11. COMPOSITE Y LEVEL Adjustment)

FOR CE

<table>
<tr><th>Machine conditions for adjustment</th><th>Specifications</th><th>Adjusting Point</th></tr>
<tr><td colspan="3">STEP-1
• Connection: Section 4-2-1 Connection
• Extension board: Extend the AD-115 board with the EX-488 board.
• Test signal: 100% Color Bars (100/0/100/0 Color Bars)
• GUI setting
1. VIN 1 = Analog Player 1
2. AP1 Format = Composite

NOTE: Adjust VIN1 and VIN2 in the same way for each bus.</td></tr>
<tr><td>STEP-2

• Waveform monitor
INPUT: CH-A
MODE: WFM</td><td>PROGRAM OUTPUT G/Y
 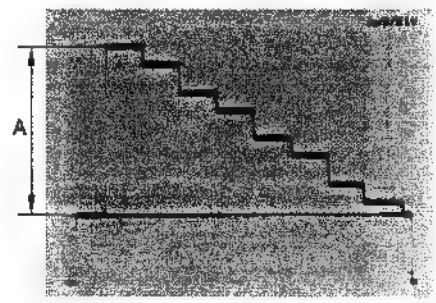

A = 700 ± 20 mV</td><td>VIN1: CPST Y GAIN adjustment
● RV200/AD-115 (F-5)

VIN2: CPST Y GAIN adjustment
● RV501/AD-115 (F-9)</td></tr>
</table>

4-6. AU-217 BOARD ADJUSTMENT

4-6-1. PLAYER/AUX INPUT LEVEL Adjustment

<table>
<tr><th>Machine conditions for adjustment</th><th>Specifications</th><th>Adjusting Point</th></tr>
<tr>
<td>STEP-1
• Confirm that the following message is displayed on the display.
MONITOR BIX-072 AUDIO
• Type "ga↙ " on the keyboard.
(↙ = RETURN key)
• Type "2" on the keyboard.
• Match I (vertical bar) displayed in RV200 through RV601 to the center of # marks.
• According to the adjusting points shown in the following table, change the connection of the XLR 3P connector.
<table>
<tr><th colspan="2">Channel</th><th>Adjusting Point</th></tr>
<tr><td rowspan="4">PLAYER 1</td><td>CH1</td><td>RV200</td></tr>
<tr><td>CH2</td><td>RV201</td></tr>
<tr><td>CH3</td><td>RV300</td></tr>
<tr><td>CH4</td><td>RV301</td></tr>
<tr><td rowspan="4">PLAYER 2</td><td>CH1</td><td>RV400</td></tr>
<tr><td>CH2</td><td>RV401</td></tr>
<tr><td>CH3</td><td>RV500</td></tr>
<tr><td>CH4</td><td>RV501</td></tr>
<tr><td rowspan="2">AUX</td><td>CH1</td><td>RV600</td></tr>
<tr><td>CH2</td><td>RV601</td></tr>
</table>
</td>
<td>30 word
RV×××#####·····#
Match I(vertical bar) to the center of the above message.
(I(vertical bar) might be changed to +(plus) when I becomes in the center of the message.)</td>
<td>● RV200/AU-217 (C-11)
● RV201/AU-217 (C-10)
● RV300/AU-217 (C-10)
● RV301/AU-217 (C-9)
● RV400/AU-217 (C-9)
● RV401/AU-217 (C-8)
● RV500/AU-217 (C-7)
● RV501/AU-217 (C-7)
● RV600/AU-217 (C-6)
● RV601/AU-217 (C-5)</td>
</tr>
</table>

4-6-2. RECORDER INPUT LEVEL Adjustment

<table>
<tr><th>Machine conditions for adjustment</th><th>Specifications</th><th>Adjusting Point</th></tr>
<tr>
<td>STEP-1
• Shift an asterisk mark to RV800, 801 by typing a space key on the keyboard.
Space key : ↓
Backspace(BS) key : ↑
• Match I(vertical bar) displayed in RV400, 401 to the center of # marks.
• ADC input selector might be changed from RV400, 401 to RV800, 801.
• Shift an asterisk mark to RV802, 803 by typing a space key on the keyboard.
• Match I(vertical bar) displayed in RV500, 501 to the center of # marks.
• ADC input selector might be changed from RV500, 501 to RV802, 803.
• According to the adjusting points shown in the following table, change the connection of the XLR 3P connector.
<table>
<tr><th colspan="2">Channel</th><th>Adjusting Point</th></tr>
<tr><td rowspan="4">RECORDER INPUT</td><td>CH1</td><td>RV800</td></tr>
<tr><td>CH2</td><td>RV801</td></tr>
<tr><td>CH3</td><td>RV802</td></tr>
<tr><td>CH4</td><td>RV803</td></tr>
</table>
</td>
<td>'See above' is displayed.

30 word
RV×××#####·····#
Match I(vertical bar) to the center of the above message.
(I(vertical bar) might be changed to +(plus) when I becomes in the senter of the message.)</td>
<td>● RV800/AU-217 (C-5)
● RV801/AU-217 (C-5)

● RV802/AU-217 (C-4)
● RV803/AU-217 (C-4)</td>
</tr>
</table>

4-6-3. LINE OUT LEVEL Adjustment

<table>
<tr><th>Machine conditions for adjustment</th><th>Specifications</th><th>Adjusting Point</th></tr>
<tr><td>STEP-1
• Shift an asterisk mark to RV700, 701 by typing a space key on the keyboard.
Space key : ↓
Backspace key : ↑
• Measure the level displayed on an audio analyzer, and adjust the level.
• Shift an asterisk mark to RV702, 703 by typing a space key on the keyboard.
• Measure the level displayed on an audio analyzer, and adjust the level.
• According to the adjusting points shown in the following table, change the connection of the XLR 3P connector.

<table><tr><th colspan="2">Channel</th><th>Adjusting Point</th></tr><tr><td rowspan="4">LINE OUT</td><td>CH1</td><td>RV700</td></tr><tr><td>CH2</td><td>RV701</td></tr><tr><td>CH3</td><td>RV702</td></tr><tr><td>CH4</td><td>RV703</td></tr></table></td><td>Confirm that the following messages are displayed on the display.
* ⊘RV700 * ..... 4 dBu adjust (1 kHz)
* ⊘RV701 * ..... 4 dBu adjust (1 kHz)

Spec. +4.00±0.05 dBu

Confirm that the following messages are displayed on the display.
* ⊘RV702 * ..... 4 dBu adjust (1 kHz)
* ⊘RV703 * ..... 4 dBu adjust (1 kHz)

Spec. +4.00±0.05 dBu</td><td>⊘ RV700/AU-217 (C-4)
⊘ RV701/AU-217 (C-3)

⊘ RV702/AU-217 (C-2)
⊘ RV703/AU-217 (C-1)</td></tr>
</table>

SECTION 5
BLOCK DIAGRAMS

5-1. OVERALL

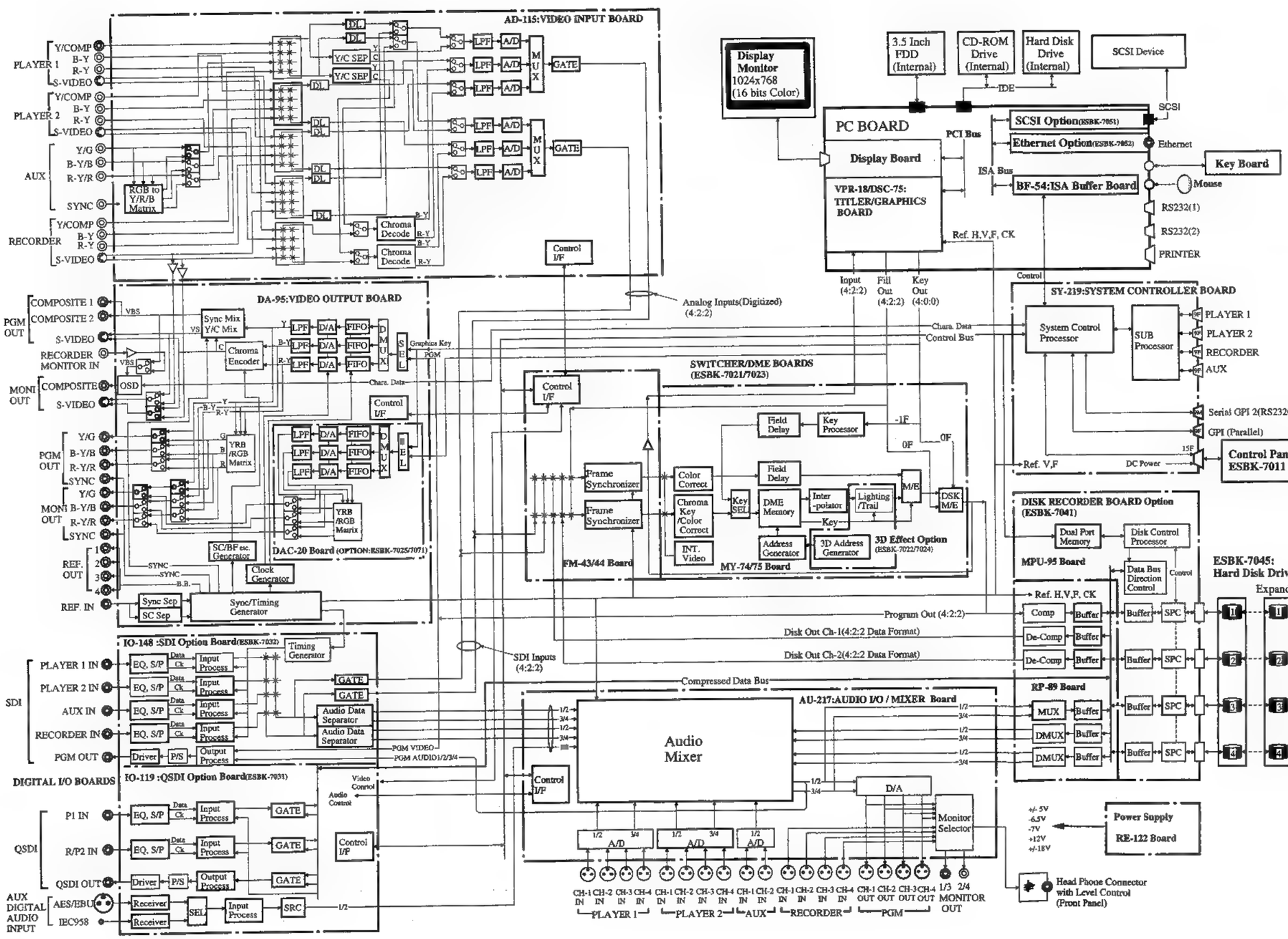

5-1

5-2. Operations/Functions of Circuit Boards

5-2-1. ANALOG VIDEO Input/Output

<AD-115 Board>

AD-115 board has several functions, that is; (a) selects 2 channels of video signals out of 4 input video channels, i.e., Player-1 and -2, Recorder (Y/R-Y/B-Y, Composite, S VIDEO) and AUX (Y/R-Y/B-Y, G/B/R, Composite); (b) digitizes the selected video signals into 4:2:2 component format (Y: 13.5MHz, R-Y/B-Y: 6.75MHz); and (c) outputs the digitized video signals to DME/Switcher Board as V IN 1 and V IN 2 signals. To achieve above, AD-115 board is equipped with 2 channels of Y/C separation circuits and Chroma Decoder circuits for composite signal processing.
Although the system has frame synchronizer function as a whole to accept asynchronous video signals as V IN 1 and V IN 2 signals, AD-115 board itself has only a write clock generator circuit for the frame synchronizer function above, and outputs the digital video signal, the write clock signal and the sync signal to the frame memory on DME/Switcher Board.
In addition, AD-115 board outputs Recorder's S VIDEO signal to DA-95 board for monitoring.

<DA-95 Board>

DA-95 board consists of two blocks of circuits, i.e., a sync signal generator block and video signal processing circuit block. The sync signal generator block consists of a Gen Lock Generator, a Sync Generator, and a System Clock Generator, etc. This block generates/outputs HD, VD, O/E and Clock signals to be used as the sync signal in the video signal processing circuit on this board as well as in other circuit boards of the main unit of Edit Station. This block also outputs Black Burst signal to external devices.
The video signal processing circuit block consists of a D/A converter, component system circuits and composite system circuits. This block outputs Y/R-Y/B-Y, RGB and composite video signals. A signal selector is used to select Y/R-Y/B-Y or RGB signals as component outputs. Addition of DAC-20 board (an optional board) allows TITLER (GRAPHICS Board) video to be output from Component OUT (Monitor-OUT) terminal.

5-2-2. AUDIO

<AU-217 Board>

This is the audio mixer board. It consists of an A/D converter, a DSP, a D/A converter and a MPU to control these signal converters and DSP. Analog input signal passes the A/D converter before it is input to the DSP. On the other hand, digital input signal receives format conversion in an optional digital I/O board before it is input to the DSP. The DSP performs processing of input audio signals. Output signal from the DSP passes the D/A converter and is output as an audio signal. Output signal from the DSP also receives format conversion in the optional digital I/O board before it is output. Both analog input and output signals are balanced type.

5-2-3. SYSTEM CONTROL

<SY-219 Board>

SY-219 is the system control board of SONY Edit Station ES-7, and in accordance with commands sent from PC block, it performs control to a DME switcher, an audio mixer, a disk recorder, a QSDI (SDI) I/F, character superimpose operation in D/A board, the control panel, GPI (RS-232C), GPI (PARALLEL), and four units of VTRs.
Control functions mentioned above are performed by the main CPU (TMP68301A with 128KB PROM, 512KB Flash Memory and 512KB RAM) except those to serial communication with the VTRs. Control to serial communication with the VTRs is performed by the sub-CPU (Z84015 with 32KB PROM).
The main CPU uses a 4KB Dual-Port memory for communication with PC block and a 2KB dual- port memory for communication with the sub-CPU. The main CPU also uses Dual-Port memories for communication with DME Switcher, the audio mixer, the disk recorder, and QSDI (SDI) I/F. These memories, however, are installed on the boards of destination of communication and memory spaces up to 16 KB are provided to each destination.
FRAME signal, FLD1 signal and EXT LOCK signal are also supplied from D/A board as the timing signals.

5-2-4. GRAPHICS BOARD

<VPR-18 Board>

VPR-18 is a frame memory board, and is connected to "CPU BLOCK" through PCI bus. This board is able to control ■ video memory with the capacity of 2 video frames.

Video signal output from VPR-18 is in 4:2:2:4 format, and is sent to the titler input and to DSK input of "DME SW'ER OPTION". Since the output video signal is also sent to "DAC-20 board", it is possible to check "ES DRAW" video on the component terminals of Monitor output by changing operating mode while other video is being output to PGM output. Video input signal is in 4:2:2 format, and is input from "DME SW'ER OPTION".

<DSC-75 Board>

DSC-75 is ■ video memory board connected to VPR-18 board. A memory with capacity of 2 video frames (NTSC or PAL system) is installed on this board.

Size of the memory installed to DSC-75 board differs between NTSC and PAL, that is, 3MB in NTSC system and 4.5 MB in PAL system.

<BF-54 Board>

BF-54 board is the interface between SY-219 board and the PC.

To accelerate the operation of Dual-Port RAMs mounted on SY-219 board from the PC side, this board consists of an address decoder block and an address/data buffers block. Addresses of these Dual-Port RAMs as seen from the PC can be changed using a jumper (JP1) located on BF-54 board. Interrupt (two levels) from SY-219 board is mapped as IRQ of ISA signal sent from the PC. Address of the IRQ also can be changed using jumpers (JP2, 3).

5-2-5. CPU BLOCK

CPU BLOCK is constructed around PC board to which an Intel Pentium processor is installed. A VGA Board, a GRAPHICS Board, and BF-54 board are installed to PCI/ ISA CARD SLOTS on PC board. In addition, a SCSI Interface board (ESBK-7051) and an Ethernet board (ESBK-7052) are installed as options. Also, a Hard Disk Drive, a 3.5" Floppy Disk Drive, and a CD-ROM drive are installed as the external memory devices

5-2-6. POWER SUPPLY

<RE-122 Board>

RE-122 is the power regulator board. The input AC power is rectified to DC before applied to the primary circuit of a DC-DC converter. A circuit for power factor improvement is incorporated in this primary circuit. Secondary circuit of the DC-DC converter consists of two major blocks; the first block produces +5V DC output, and the second one produces +12V DC output. Voltages other than +5V and +12V such as -5V, +6.5V, -7V, +18V, -18V and -12V are obtained from voltage regulators connected to +12V line of secondary circuit of the DC-DC converter. In addition, this board provides a function for flashing the power indicator LED when detected the cooling fan stop signal sent from a senor.

5-2-7. MISCELLANEOUS

<FP-74 Board>

On this board, a headphone amplifier, a headphone jack, and a potentiometer for audio volume control are installed.

<LE-154 Board>

This is the board on which the power indicator LED is mounted.

<CN-1242 Board>

This is the board on which BNC type connector for the reference video output signal is mounted.

<CN-1237/1238 Board>

This board is used for mounting of audio signal connectors, and is mounted at the rear of audio connectors located on lower portion of the real panel.

<MB-639 Board>

This is the mother board for connection of all the boards of the system.

5-2-8. DME SW'ER OPTION

• ESBK-7021

<FM-43 Board>

The frame synchronizer block located on FM-43/A board performs synchronization of 2 channels of digitized asynchronous video signals sent from boards such as AD-115/A, IO-119, etc. with the reference signal generated in DA-95/A board, and outputs the video signals on FRGD BUS and BKGD BUS to MY-74 board.

Operation of the frame synchronizer block is controlled by setting up values to registers using the Effects CPU in the CPU block on this board.

<MY-74 Board>

MY-74 board contains a 2-field memory for Y/B-Y/R-Y signal format (4:1:1, 8 bits each). This board sequentially writes the picture data sent from FM-43/A board into this memory using the counter address generated in this board. Next, the boards reads the transformed picture from the memory using a 2D ADDRESS GENERATOR (IC134) and the addresses supplied from PU-84 board. The data thus read receives digital processing such as linear interpolation of data, bit masking, negative inversion, etc., in DATA INTERPOLATER (IC312 to IC315) then is Mix/Effects processed with both BKGD picture sent from FM-43/A board and DSK picture sent from VPR-18 board before it is output to DA-95/A board as the processed video signal.

• ESBK-7022

<PU-84 Board>

PU-84 board performs operation to memory read address to achieve various Effects such as 3D Linear, Page Turn, Twist, Sphere, Wave Modulation, etc., and outputs the result of operation to MY-74 board.

Operation of PU-84 board is controlled by setting up values to the registers on this board using the Effects CPU located on FM-43/A board.

• ESBK-7023

<FM-44 Board>

FM-44 board consists of a CPU block and a Switcher block. CPU block contains MAIN CPU, EFFECTS CPU, WORK RAM, PROGRAM ROM, EFFECTS ROM, etc., and performs system control and Effects execution in DME block. It also acts as the interface between this board and the CPU on SY-219 board. The Switcher block performs the first half of video signal processing functions of DME Switcher consisting of FM-44, MY-75 and VE-33 boards. This block has several functions, that is; (a) selects 2 channels of video signals out of 5 channels of input video signals sent from various boards such as AD-115, IO-119, RP-89, VPR-18, etc., (b) locks the selected video signals to the sync signal generated in DA-95 board, and (c) outputs these video signals to MY-75 board as FRGD BUS and BKGD BUS video signals. The block also generates LUMINANCE KEY and CHROMA KEY signals using the video signal of FRGD BUS as KEY SOURCE, and outputs one of them to MY-75 board as FRGD BUS KEY signal.

<MY-75 Board>

MY-75 board contains (a) Wipe Processing block to perform cutting of FRGD picture data using a Wipe pattern, (b) a Transform Processing block with DME, and (c) a M/E block to synthesize FRGD picture data with BKGD picture data sent from FM-44 board. MY-75 is also equipped with ■ 3D Transform Processing block and ■ Lighting/Trail Processing block to be enabled when installed optional VE-33 board.

• ESBK-7024

<VE-33 Board>

VE-33 board contains (a) an Address Generator block to perform various Effects such as 3D Linear, Page Turn, Twist, Sphere, Wave Modulation, etc., (b) a Lighting block to add Lighting Effects to the picture, and (c) ■ Trail block to produce afterimage Effects. VE-33 board outputs the results of operation above to MY-75 board. Operation of VE-33 board is controlled by setting up values to various registers on VE-33 board using the Effects CPU located on FM-44 board.

• ESBK-7025

ESBK-7025 consists of a 9-Pin Interface board (IF-547) to perform control to DFS-300/500, and DAC-20 board to output KEY OUT/KEY FILL signals (generated in a video titler built in ES-7 system) to PROGRAM OUT/MONITOR OUT terminals.

5-2-9. NON-LINEAR OPTION

• ESBK-7041

<MPU-95 Board>

MPU-95 board consists of a CPU circuit to control non-linear editing operation. The CPU circuit contains (a) a "HDD CPU" which mainly controls the hard disk, (b) a "sub-CPU" which performs control to RP-89 board and timing management, and (c) a "bus CPU" which controls operation of the internal bus through which video/audio information for non-linear editing is passing to and fro.
In addition, 4 channels of SCSI connectors are mounted on MPU-95 board to directly interface with the hard disk for non-linear editing to achieve non-linear editing function together with RP-89 board.

<RP-89 Board>

RP-89 board consists of a Video block and an Audio block.
The Video block converts the component video signal sent from MY-74 or MY-75 board into component 4:1:1 format (4:2:0 in PAL system) signal for signal compression. The compressed signal data is transferred to MPU-95 board through a compression data bus.
The board also expands the video data transferred from MPU-95 board through a compression data bus into component 4:2:2 format signal to send it to FM-43 or FM-44 board.
The Audio block performs frequency conversion of the audio signal data sent from AU-217 board, and sends it to MPU-95 board through a compression data bus.
The board also performs frequency conversion of Audio data sent back from MPU-95 board through a compression data bus, and sends it to AU-217 board.

5-2-10. DIGITAL I/O OPTION

• ESBK-7031

<IO-119 Board>

IO-119 board has three types of inputs/output, i.e., QSDI IN/OUT, AES/EBU input, and IEC-958 input.
QSDI block receives QSDI input sent from DCR VCR, performs 12 -> 16 conversion of Audio data (in the case of 32k 4ch. data), de-interleaves the data, then transfers the data to MPU-95 board through a compression data bus.
The board also performs 16 -> 12 conversion and interleave processing to Audio data transferred from MPU-95 board, and outputs QSDI output to DCR VCR. The board selects one of audio data out of AES/EBU/IEC-958 blocks, and sends the audio data to AU-217 board.

• ESBK-7032

<IO-148 Board>

IO-148 board is mounted on IO-119 board. IO-148 board receives SDI input, and sends the video data to FM-43 or FM-44 board and the audio data to AU-217 board.
The board outputs the video data sent back from FM-43 or FM-44 board and the Audio data sent back from AU-217 board to SDI terminals as SDI output.

5-2-11. ES DRAW

• ESBK-7071

<DAC-20 Board>

DAC-20 board consists of circuits similar to D/A converter block and component signal processing circuits of video signal system in DA-95 board, and outputs the digital video signal sent from TITLER (GRAPHICS Board) in analog, Y/R-Y/B-Y or RGB signal format.

SECTION 6
FRAME WIRING & BOARD LAYOUTS

ES-7 ; EDIT STATION

BOARD NAME	CIRCUIT FUNCTION	PAGE	
CN-1237	AUDIO CONNECTOR BOARD	6-2	6-25
CN-1238	AUDIO CONNECTOR BOARD	6-2	6-24
CN-1242	CONNECTOR BOARD	6-2	6-24
FP-74	FRONT PANEL BOARD	6-2	6-24
LE-154	LED BOARD	6-2	6-24
MB-639	MOTHER BOARD	6-10	6-22

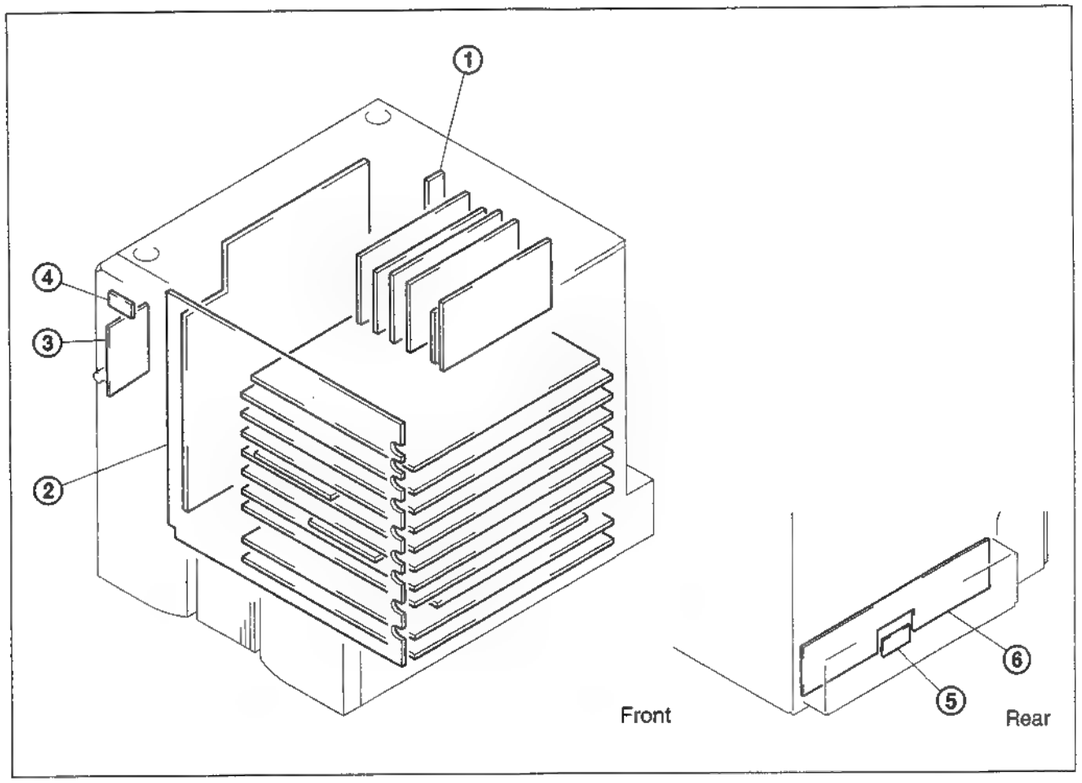

① CN-1242
② MB-639
③ FP-74
④ LE-154
⑤ CN-1238
⑥ CN-1237

6-1

FRAME WIRING (1/4)

FRAME WIRING (1/4)

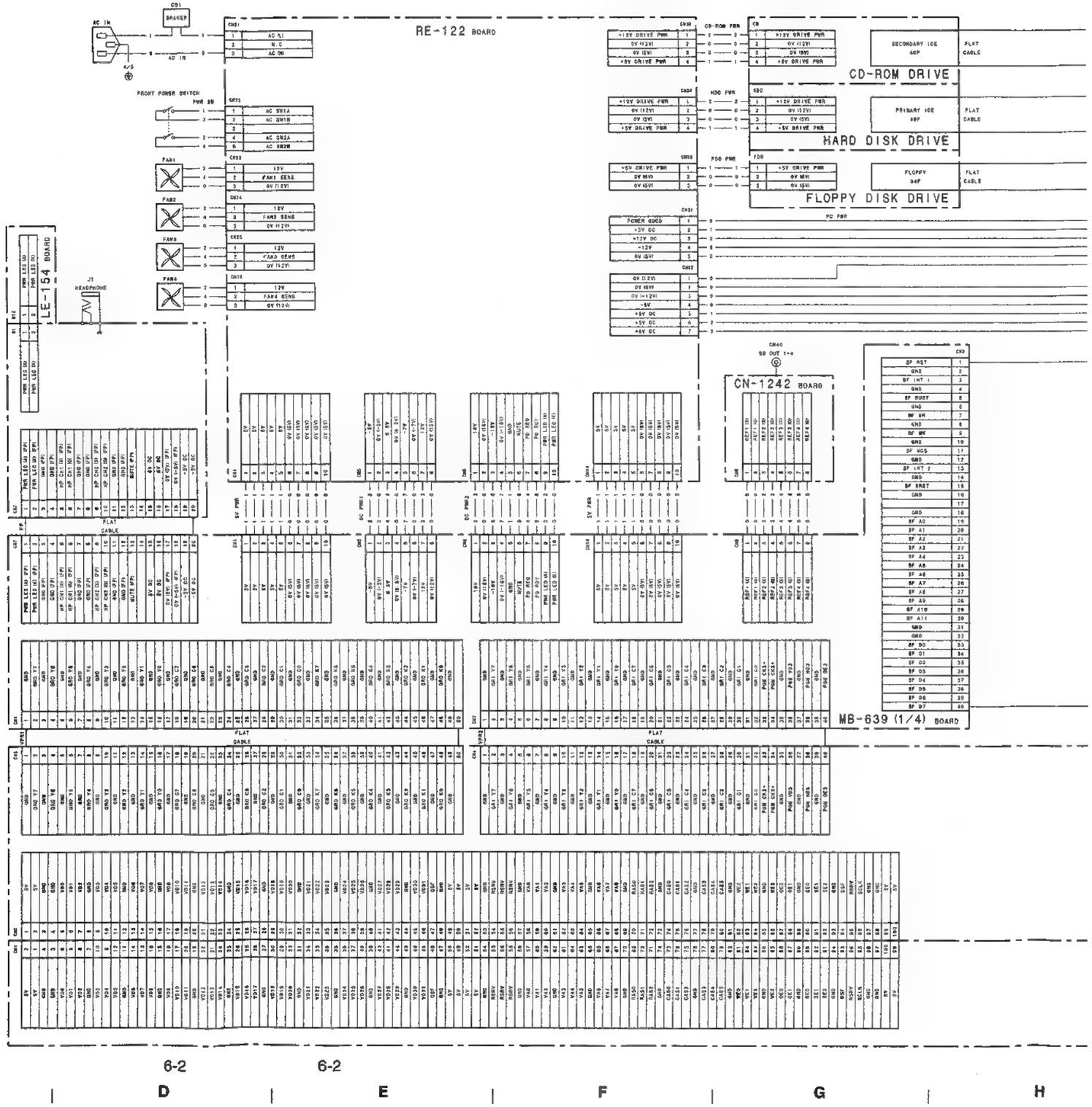

6-2

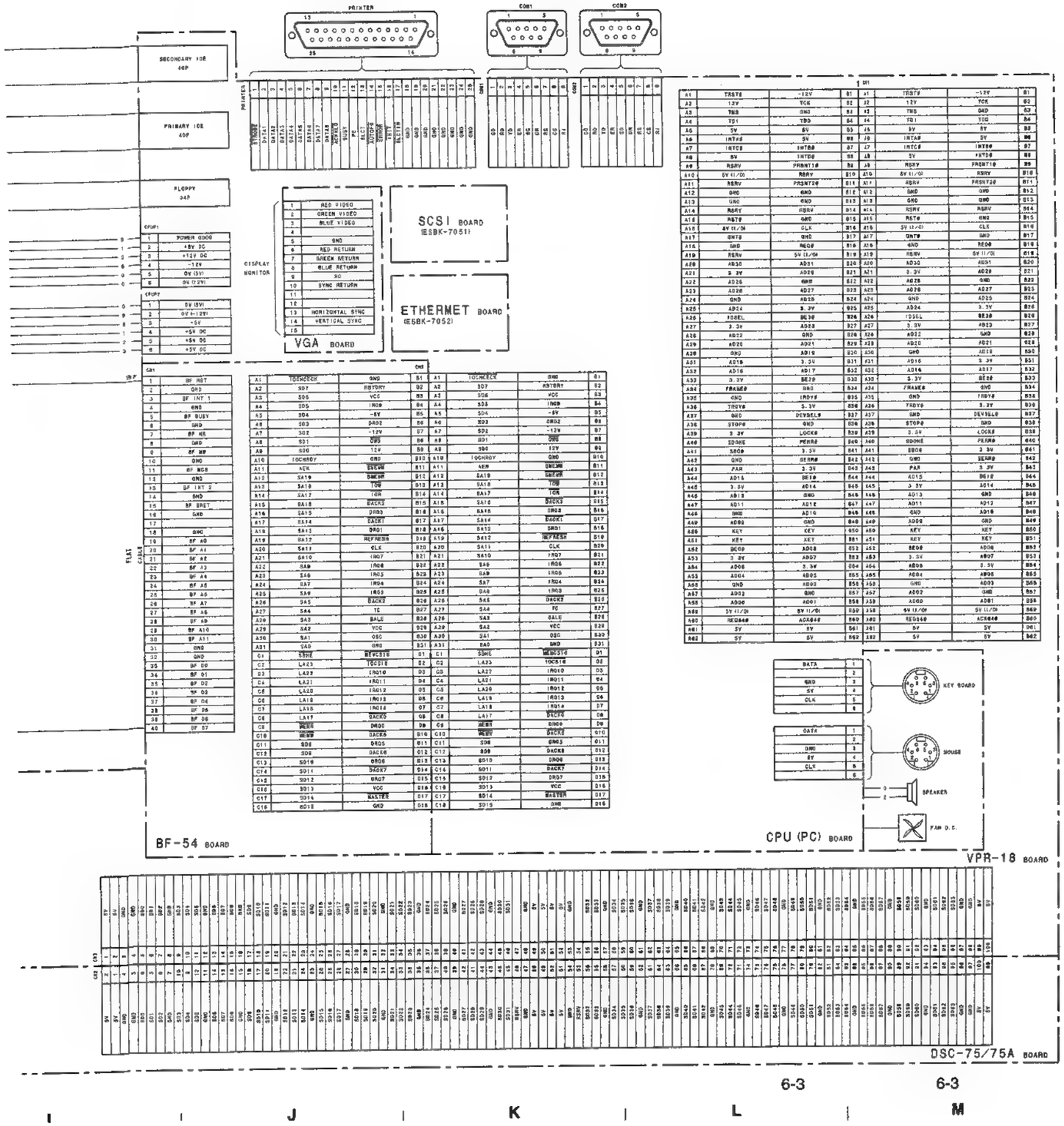

FRAME WIRING (1/4)

MODEL ES-7
B-ES7-FRAME#1

FRAME WIRING (2/4)

FRAME WIRING (2/4)

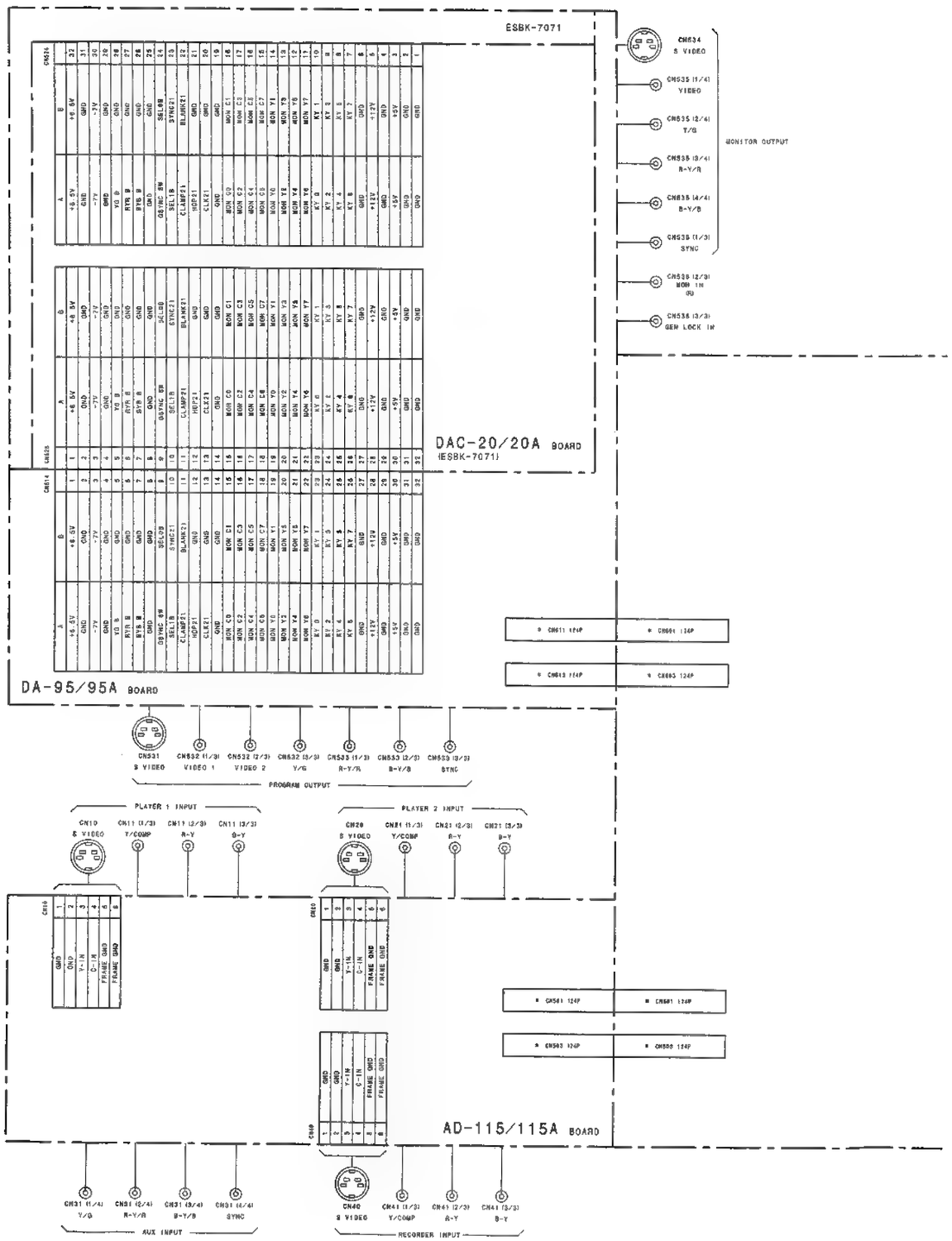

6-4

FRAME WIRING (2/4)

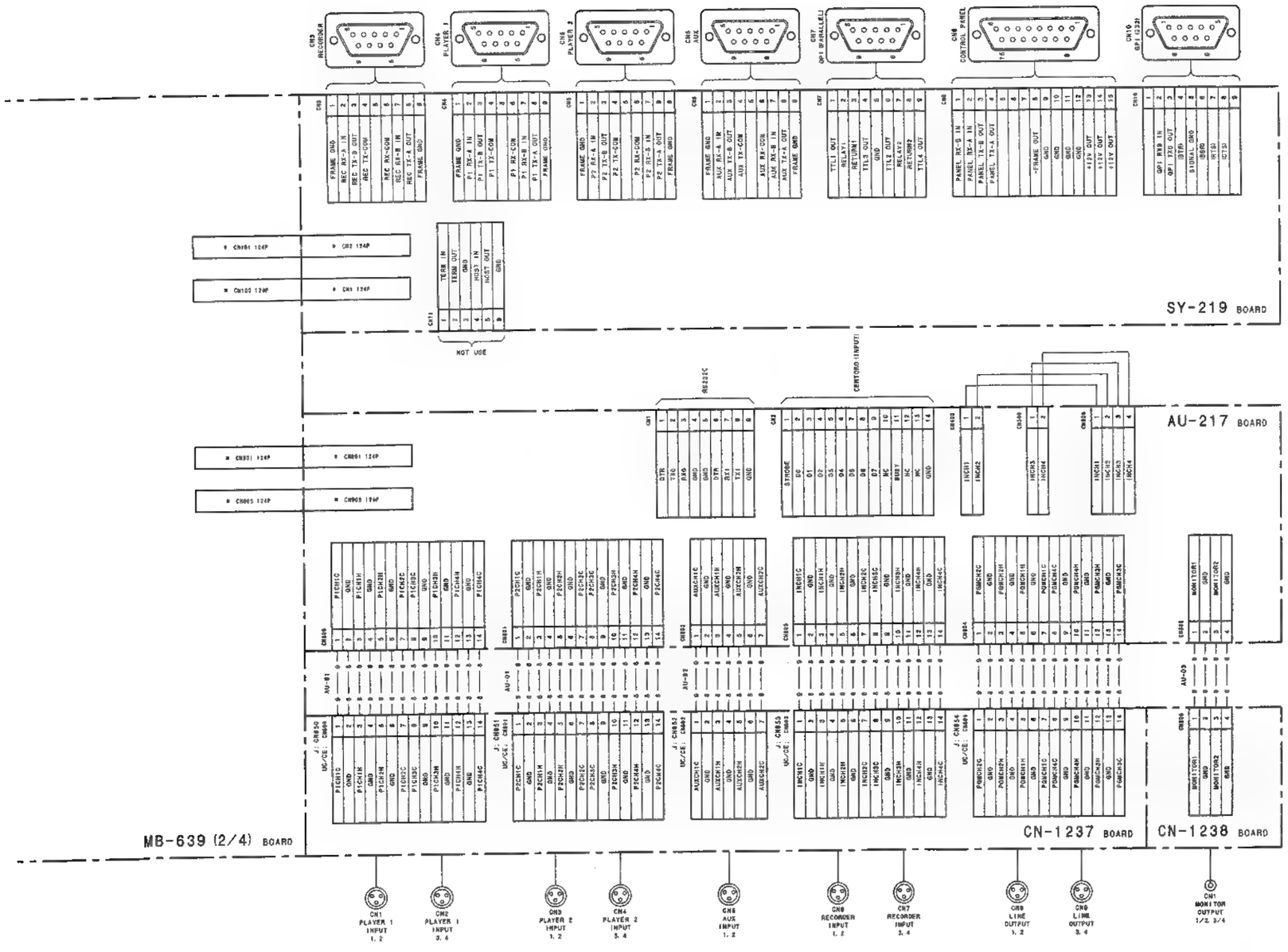

FRAME WIRING (2/4)

MODEL ES-7
B-ES7-FRAME#2

FRAME WIRING (3/4)

FRAME WIRING (3/4)

*MARK:REFER TO MB-639

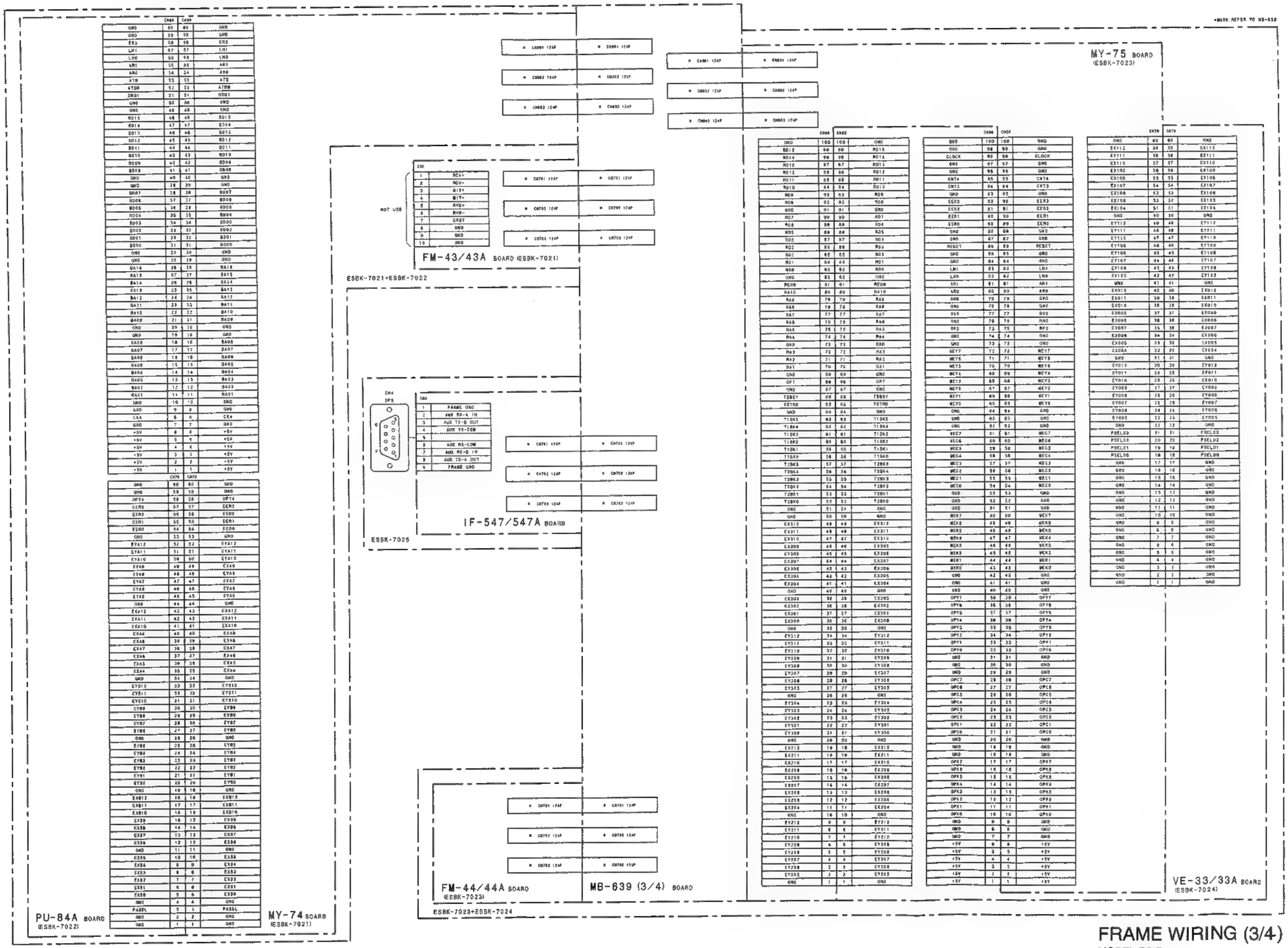

6-7

FRAME WIRING (3/4)
MODEL ES-7
B-ES7-FRAME#3

FRAME WIRING (4/4)

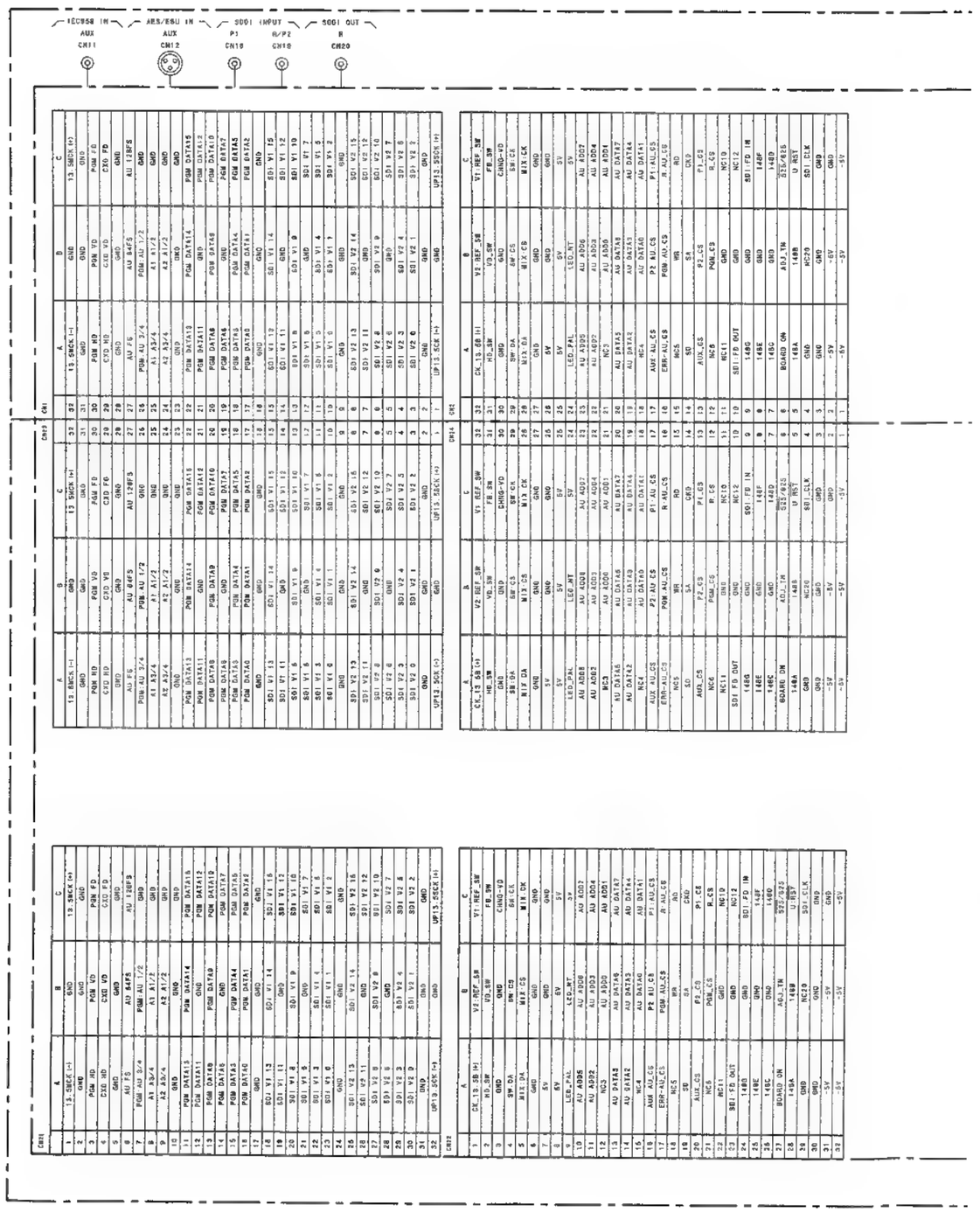

6-8

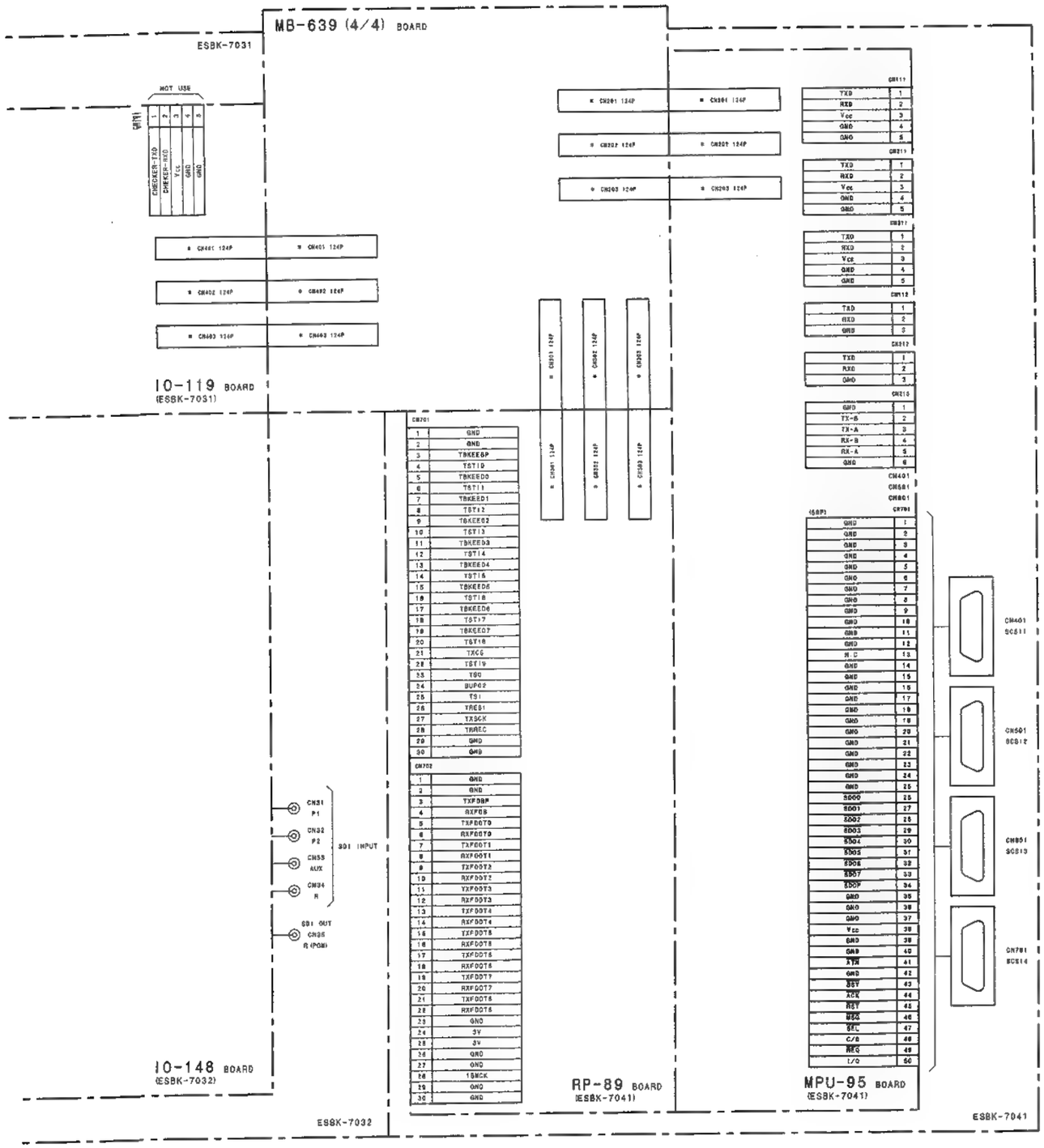

FRAME WIRING (4/4)

MODEL ES-7
B-ES7-FRAME#4

6-9 6-9

I J K L M N O P

MOTHER BOARD (1/6)

1

2

3

4

5

VPR-18

CN1		
1	GND	
2	GRO Y7	601-36, 701-36, 801-36
3	GND	
4	GRO Y6	601-37, 701-37, 801-37
5	GND	
6	GRO Y5	601-38, 701-38, 801-38
7	GND	
8	GRO Y4	601-35, 701-35, 801-35
9	GND	
10	GRO Y3	601-33, 701-33, 801-33
11	GND	
12	GRO Y2	601-32, 701-32, 801-32
13	GND	
14	GRO Y1	601-31, 701-31, 801-31
15	GND	
16	GRO Y0	601-29, 701-29, 801-29
17	GND	
18	GRO C7	601-26, 701-26, 801-26
19	GND	
20	GRO C6	601-27, 701-27, 801-27
21	GND	
22	GRO C5	601-25, 701-25, 801-25
23	GND	
24	GRO C4	601-24, 701-24, 801-24
25	GND	
26	GRO C3	601-23, 701-23, 801-23
27	GND	
28	GRO C2	601-21, 701-21, 801-21
29	GND	
30	GRO C1	601-20, 701-20, 801-20
31	GND	
32	GRO C0	601-19, 701-19, 801-19
33	GND	
34	GRO K7	601-17, 701-17, 801-17
35	GND	
36	GRO K6	601-16, 701-16, 801-16
37	GND	
38	GRO K5	601-15, 701-15, 801-15
39	GND	
40	GRO K4	601-13, 701-13, 801-13
41	GND	
42	GRO K3	601-12, 701-12, 801-12
43	GND	
44	GRO K2	601-11, 701-11, 801-11
45	GND	
46	GRO K1	601-9, 701-9, 801-9
47	GND	
48	GRO K0	601-8, 701-8, 801-8
49	GND	
50		

SY-219

	CN101				
	124	5V	123	5V	
	122	5V	121	5V	
	120	5V	119	5V	
	118	0V (5V)	117	0V (5V)	
	116	0V (5V)	115	0V (5V)	
	114	0V (5V)	113	0V (5V)	
	112		111		
	110		109		
	108		107		
	106		105		
2	104	PD REQ	103	PD RDY	1
	102		101		
	100		99		
	98		97		
	96		95		
	94	12V	93	12V	
	92	0V (12V)	91	0V (12V)	
	90		89		
	88		87		
	86		85		
	84		83		
	82	GND	81	SY S CLK	601-81
601-80	80	SY S DATA	79	SY CS	601-79
	78	GND	77		
	76		75		
	74	GND	73		
	72		71		
	70	GND	69		
	68		67		
	66	GND	65		
	64		63		
	62	GND	61		
	60		59		
	58	GND	57		
	56		55		
	54	GND	53		
	52		51		
	50	GND	49		
	48		47		
	46	GND	45		
	44		43		
	42	GND	41		
	40		39		
	38	GND	37		
	36		35		
	34	GND	33		
	32		31		
	30	GND	29		
	28		27		
	26	GND	25		
	24		23		
	22	GND	21		
	20		19		
	18	GND	17		
	16		15		
	14	GND	13		
	12		11		
	10	GND	9		
	8		7		
	6	GND	5		
	4		3		
	2	GND	1		

MPU-95

	CN102				
	124	5V	123	5V	
	122	5V	121	5V	
	120	5V	119	5V	
	118	0V (5V)	117	0V (5V)	
	116	0V (5V)	115	0V (5V)	
	114	0V (5V)	113	0V (5V)	
	112	0V (-5V)	111	0V (-5V)	
	110	0V (-5V)	109	0V (-5V)	
	108	-5V	107	-5V	
	106	-5V	105	-5V	
2	104	PD REQ	103	PD RDY	1
	102		101		
	100		99		
	98		97		
	96		95		
	94	12V	93	12V	
	92	0V (12V)	91	0V (12V)	
	90		89		
	88		87		
	86		85		
	84		83		
	82	GND	81		
	80		79		
	78	GND	77		
	76		75		
	74	GND	73		
	72		71		
	70	GND	69		
	68		67		
	66	GND	65		
	64		63		
	62	GND	61		
	60		59		
	58	GND	57		
	56		55		
	54	GND	53		
	52		51		
	50	GND	49		
	48		47		
	46	GND	45		
	44		43		
	42	GND	41		
	40		39		
	38	GND	37		
	36		35		
	34	GND	33		
	32		31		
	30	GND	29		
	28		27		
	26	GND	25		
	24		23		
	22	GND	21		
	20		19		
	18	GND	17		
	16		15		
	14	GND	13		
	12		11		
	10	GND	9		
	8		7		
	6	GND	5		
	4		3		
	2	GND	1		

A B C D E F G H

RP-89

CN501

	124	5V	123	5V		
	122	5V	121	5V		
	120	5V	119	5V		
	118	0V (5V)	117	0V (5V)		
	116	0V (5V)	115	0V (5V)		
	114	0V (5V)	113	0V (5V)		
	112	0V (-5V)	111	0V (-5V)		
	110	0V (-5V)	109	0V (-5V)		
	108	-5V	107	-5V		
	106	-5V	105	-5V		
2	104	PD REQ	103	PD RDY	1	
	102		101			
	100		99			
	98		97			
	96		95			
	94	12V	93	12V		
	92	0V (12V)	91	0V (12V)		
	90		89			
	88		87			
	86		85			
	84		83			
	82	GND	81	DISK2 C7	701-81	
701-80	80	DISK2 C6	79	DISK2 C5	701-79	
	78	GND	77	DISK2 C4	701-77	
701-76	76	DISK2 C3	75	DISK2 C2	701-75	
	74	GND	73	DISK2 C1	701-73	
701-72	72	DISK2 C0	71	DISK2 Y7	701-71	
	70	GND	69	DISK2 Y6	701-69	
701-68	68	DISK2 Y5	67	DISK2 Y4	701-67	
	66	GND	65	DISK2 Y3	701-65	
701-64	64	DISK2 Y2	63	DISK2 Y1	701-63	
	62	GND	61	DISK2 Y0	701-61	
701-60	60	DISK1 C7	59	DISK1 ■	701-59	
	58	GND	57	DISK1 C5	701-57	
701-56	56	DISK1 C4	55	DISK1 C3	701-55	
	54	GND	53	DISK1 C2	701-53	
701-52	52	DISK1 C1	51	DISK1 C0	701-51	
	50	GND	49	DISK1 Y7	701-49	
701-48	48	DISK1 Y6	47	DISK1 Y5	701-47	
	46	GND	45	DISK1 Y4	701-45	
701-44	44	DISK1 Y3	43	DISK1 Y2	701-43	
	42	GND	41	DISK1 Y1	701-41	
701-40	40	DISK1 Y0	39			
	38	GND	37			
	36		35			
	34	GND	33			
	32		31	AU LRCK	401-31, 901-31	
	30	GND	29	DISK2 A 3/4	901-29	
901-28	28	DISK2 A 1/2	27	AU 64FS	401-27, 901-27	
	26	GND	25	DISK1 A 3/4	901-25	
901-24	24	DISK1 A 1/2	23	AU 128FS	401-23, 901-23	
	22	GND	21			
	20		19	AU 512FS	401-19, 901-19	
	18	GND	17			
	16		15			
	14	GND	13	AU DATA	401-13, 901-13	
401-12, 901-12	12	AU CS	11	AU SCK	401-11, 901-11	
	10	GND	9	PCM A 3/4	401-9, 901-9	
401-8, 901-8	8	PCM A 1/2	7			
	6	GND	5			
	4		3			
	2	GND	1			

IO-119

CN401

	124	5V	123	5V		
	122	5V	121	5V		
	120	5V	119	5V		
	118	0V (5V)	117	0V (5V)		
	116	0V (5V)	115	0V (5V)		
	114	0V (5V)	113	0V (5V)		
	112	0V (-5V)	111	0V (-5V)		
	110	0V (-5V)	109	0V (-5V)		
	108	-5V	107	-5V		
	106	-5V	105	-5V		
2	104	PD REQ	103	PD RDY	1	
	102		101			
	100		99			
	98		97			
	96		95			
	94	12V	93	12V		
	92	0V (12V)	91	0V (12V)		
	90		89			
	88		87			
	86		85			
	84		83			
	82	GND	81			
	80		79			
	78	GND	77			
	76		75			
	74	GND	73			
	72		71			
	70	GND	69			
	68		67			
	66	GND	65			
	64		63			
	62	GND	61			
	60		59			
	58	GND	57			
	56		55			
	54	GND	53			
	52		51			
	50	GND	49			
	48		47			
	46	GND	45			
	44		43			
	42	GND	41			
	40		39	SDI OE	901-44	
	38	GND	37	SDI V	901-43	
901-41	36	SDI H	35	VD	901-35, 901-40	
	34	GND	33			
	32		31	AU LRCK	301-31, 901-31	
	30	GND	29			
	28		27	AU 64FS	301-27, 901-27	
	26	GND	25			
	24		23	AU 128FS	301-23, 901-23	
	22	GND	21	SDI2 A 3/4	901-21	
901-20	20	SDI2 A 1/2	19	AU 512FS	301-19, 901-19	
	18	GND	17	SDI1 A 3/4	901-17	
901-16	16	SDI1 A 1/2	15	AUX 1/2	901-15	
	14	GND	13	AU DATA	301-13, 901-13	
301-12, 901-12	12	AU CS	11	AU SCK	301-11, 901-11	
	10	GND	9	PCM A 3/4	301-9, 901-9	
301-8, 901-8	8	PCM A 1/2	7			
	6	GND	5			
	4		3			
	2	GND	1			

AD-115

CN501

	124	5V	123	5V		
	122	5V	121	5V		
	120	5V	119	5V		
	118	0V (5V)	117	0V (5V)		
	116	0V (5V)	115	0V (5V)		
	114	0V (5V)	113	0V (5V)		
	112	0V (-5V)	111	0V (-5V)		
	110	0V (-5V)	109	0V (-5V)		
	108	-8V	107	-5V		
	106	-8V	105	-5V		
2	104	PD REQ	103	PD RDY	1	
	102	6.5V	101	6.5V		
	100	0V (8.5V)	99	0V (8.5V)		
	98	0V (-7V)	97	0V (-7V)		
	96	-7V	95	-7V		
	94	12V	93	12V		
	92	■■ (12V)	91	0V (12V)		
	90		89			
	88		87			
	86		85			
	84		83			
	82	GND	81			
	80		79			
	78	GND	77			
	76		75			
	74	GND	73			
	72		71			
	70	GND	69			
	68		67			
	66	GND	65			
	64		63			
	62	GND	61			
	60		59			
	58	GND	57			
	56		55			
	54	GND	53			
	52		51			
	50	GND	49			
	48		47			
	46	GND	45			
	44		43			
	42	GND	41			
	40		39			
	38	GND	37			
	36		35	VD	401-35, 901-40	
	34	GND	33			
	32		31			
	30	GND	29			
	28		27			
	26	GND	25			
	24		23			
	22	GND	21			
	20		19			
	18	GND	17			
	16		15			
	14	GND	13			
	12		11			
	10	GND	9			
	8		7			
	6	GND	5			
701-4	4	SW CS AD	3	SW S CLK	402-3, 601-3, 701-3	
	2	GND	1	SW S DATA	402-1, 601-1, 701-1	

1 6-8, 101-103, 201-103, 301-103, 401-103, 501-103, 601-103, 701-103, 801-103, 901-103
2 6-7, 101-104, 201-104, 301-104, 401-104, 501-104, 601-104, 701-104, 801-104, 901-104

MB-639 (1/6)
PART NO 1-661-120-12
MODEL ES-7
B-ES7-MB639-12

MOTHER BOARD (2/6)

DA-95

CN601

	124	5V	123	5V	
	122	5V	121	5V	
	120	5V	119	5V	
	118	0V (5V)	117	0V (5V)	
	116	0V (5V)	115	0V (5V)	
	114	0V (5V)	113	0V (5V)	
	112	0V (-5V)	111	0V (-5V)	
	110	0V (-5V)	109	0V (-8V)	
	108	-5V	107	-8V	
	106	-5V	105	-8V	
2	104	PD REQ	103	PD RDY	1
	102	8.5V	101	8.5V	
	100	0V (8.5V)	99	0V (8.5V)	
	98	0V (-7V)	97	0V (-7V)	
	96	-7V	95	-7V	
	94	12V	93	12V	
	92	0V (12V)	91	0V (12V)	
	90		89		
	88		87		
	86		85		
	84		83		
	82	GND	81	SY S CLK	101-51
101-58	80	SY S DATA	79	SY CS	101-79
	78	GND	77		
	76		75		
	74	GND	73		
	72		71		
	70	GND	69		
	68		67		
	66	GND	65		
	64		63		
	62	GND	61		
	60		59		
	58	GND	57		
	56		55		
	54	GND	53		
	52		51		
	50	GND	49		
	48		47		
	46	GND	45		
401-38	44	SDI OE	43	SDI V	401-37
	42	GND	41	SDI H	401-36
401-35, 601-35	40	VD	39	GRO Y7	1-2, 701-39, 801-39
	38	GND	37	GRO Y6	1-4, 701-37, 801-37
1-6, 701-35, 801-35	36	GRO Y5	35	GRO Y4	1-6, 701-35, 801-35
	34	GND	33	GRO Y3	1-10, 701-33, 801-33
1-12, 701-32, 801-32	32	GRO Y2	31	GRO Y1	1-14, 701-31, 801-31
	30	GND	29	GRO Y0	1-16, 701-29, 801-29
1-18, 701-28, 801-28	28	GRO C7	27	GRO C6	1-20, 701-27, 801-27
	26	GND	25	GRO C5	1-22, 701-25, 801-25
1-24, 701-24, 801-24	24	GRO C4	23	GRO C3	1-26, 701-23, 801-23
	22	GND	21	GRO C2	1-28, 701-21, 801-21
1-30, 701-20, 801-20	20	GRO C1	19	GRO C0	1-32, 701-19, 801-19
	18	GND	17	GRO K7	1-34, 701-17, 801-17
1-36, 701-16, 801-16	16	GRO K6	15	GRO K5	1-36, 701-15, 801-15
	14	GND	13	GRO K4	1-40, 701-13, 801-13
1-42, 701-12, 801-12	12	GRO K3	11	GRO K2	1-44, 701-11, 801-11
	10	GND	9	GRO K1	1-46, 701-9, 801-9
1-48, 701-8, 801-8	8	GRO K0	7		
	6	GND	5	SW CS DA	701-5
	4		3	SW S CLK	402-3, 501-3, 701-3
	2	GND	1	SW S DATA	402-1, 501-1, 701-1

FM-43/FM-44/IF-547

CN701

	124	5V	123	5V	
	122	5V	121	5V	
	120	5V	119	5V	
	118	0V (5V)	117	0V (5V)	
	116	0V (5V)	115	0V (5V)	
	114	0V (5V)	113	0V (5V)	
	112	0V (-5V)	111	0V (-8V)	
	110	0V (-5V)	109	0V (-8V)	
	108	-5V	107	-8V	
	106	-5V	105	-8V	
2	104	PD REQ	103	PD RDY	1
	102	8.5V	101	8.5V	
	100	0V (8.5V)	99	0V (8.5V)	
	98	0V (-7V)	97	0V (-7V)	
	96	-7V	95	-7V	
	94	12V	93	12V	
	92	0V (12V)	91	0V (12V)	
	90		89		
	88		87		
	86		85		
	84		83		
	82	GND	81	DISK2 C7	301-81
301-80	80	DISK2 C6	79	DISK2 C5	301-79
	78	GND	77	DISK2 C4	301-77
301-78	76	DISK2 C3	75	DISK2 C2	301-75
	74	GND	73	DISK2 C1	301-73
301-72	72	DISK2 C0	71	DISK2 Y7	301-71
	70	GND	69	DISK2 Y6	301-69
301-68	68	DISK2 Y5	67	DISK2 Y4	301-67
	66	GND	65	DISK2 Y3	301-65
301-64	64	DISK2 Y2	63	DISK2 Y1	301-63
	62	GND	61	DISK2 Y0	301-61
301-60	60	DISK1 C7	59	DISK1 C6	301-59
	58	GND	57	DISK1 C5	301-57
301-56	56	DISK1 C4	55	DISK1 C3	301-55
	54	GND	53	DISK1 C2	301-53
301-52	52	DISK1 C1	51	DISK1 C0	301-51
	50	GND	49	DISK1 Y7	301-49
301-48	48	DISK1 Y6	47	DISK1 Y5	301-47
	46	GND	45	DISK1 Y4	301-45
301-44	44	DISK1 Y3	43	DISK1 Y2	301-43
	42	GND	41	DISK1 Y1	301-41
301-40	40	DISK1 Y0	39	GRO Y7	1-2, 601-39, 801-39
	38	GND	37	GRO Y6	1-4, 601-37, 801-37
1-6, 601-35, 801-35	36	GRO Y5	35	GRO Y4	1-6, 601-35, 801-35
	34	GND	33	GRO Y3	1-10, 601-33, 801-33
1-12, 601-32, 801-32	32	GRO Y2	31	GRO Y1	1-14, 601-31, 801-31
	30	GND	29	GRO Y0	1-16, 601-29, 801-29
1-18, 601-28, 801-28	28	GRO C7	27	GRO C6	1-20, 601-27, 801-27
	26	GND	25	GRO C5	1-22, 601-25, 801-25
1-24, 601-24, 801-24	24	GRO C4	23	GRO C3	1-26, 601-23, 801-23
	22	GND	21	GRO C2	1-28, 601-21, 801-21
1-30, 601-20, 801-20	20	GRO C1	19	GRO C0	1-32, 601-19, 801-19
	18	GND	17	GRO K7	1-34, 601-17, 801-17
1-36, 601-16, 801-16	16	GRO K6	15	GRO K5	1-36, 601-15, 801-15
	14	GND	13	GRO K4	1-40, 601-13, 801-13
1-42, 601-12, 801-12	12	GRO K3	11	GRO K2	1-44, 601-11, 801-11
	10	GND	9	GRO K1	1-46, 601-9, 801-9
1-48, 601-8, 801-8	8	GRO K0	7	SW CS ID	403-7
	6	GND	5	SW CS DA	601-5
601-4	4	SW CS AD	3	SW S CLK	402-3, 501-3, 601-3
	2	GND	1	SW S DATA	402-1, 501-1, 601-1

MY-74/MY-75

CN601

	124	5V	123	5V	
	122	5V	121	5V	
	120	5V	119	5V	
	118	0V (5V)	117	0V (5V)	
	116	0V (5V)	115	0V (5V)	
	114	0V (5V)	113	0V (5V)	
	112		111		
	110		109		
	108		107		
	106		105		
2	104	PD REQ	103	PD RDY	1
	102		101		
	100		99		
	98		97		
	96		95		
	94		93		
	92		91		
	90		89		
	88		87		
	86		85		
	84		83		
	82	GND	81		
	80		79		
	78	GND	77		
	76		75		
	74	GND	73		
	72		71		
	70	GND	■		
	68		67		
	66	GND	65		
	64		63		
	62	GND	61		
	60		59		
	58	GND	57		
	56		55		
	54	GND	53		
	52		51		
	50	GND	49		
	48		47		
	46	GND	45		
	44		43		
	42	GND	41		
	40		39	GRO Y7	1-2, 601-39, 701-39
	38	GND	37	GRO Y6	1-4, 601-37, 701-37
1-6, 601-35, 701-35	36	GRO Y5	■	GRO Y4	1-6, 601-35, 701-35
	34	GND	33	GRO Y3	1-10, 601-33, 701-33
1-12, 601-32, 701-32	32	GRO Y2	31	GRO Y1	1-14, 601-31, 701-31
	30	GND	29	GRO Y0	1-16, 601-29, 701-29
1-18, 601-28, 701-28	28	GRO C7	27	GRO C6	1-20, 601-27, 701-27
	26	GND	25	GRO C5	1-22, 601-25, 701-25
1-24, 601-24, 701-24	24	GRO C4	23	GRO C3	1-26, 601-23, 701-23
	22	GND	21	GRO C2	1-28, 601-21, 701-21
1-30, 601-20, 701-20	20	GRO C1	19	GRO C0	1-32, 601-19, 701-19
	18	GND	17	GRO K7	1-34, 601-17, 701-17
1-38, 601-16, 701-16	16	GRO K6	15	GRO K5	1-38, 601-15, 701-15
	14	GND	13	GRO K4	1-42, 601-13, 701-13
1-42, 601-12, 701-12	12	GRO K3	11	GRO K2	1-44, 601-11, 701-11
	10	GND	9	GRO K1	1-46, 601-9, 701-9
1-48, 601-8, 701-8	8	GRO K0	7		
	6	GND	5		
	4		3		
	2	GND	1		

AU-217

CN901

	124	5V	123	5V	
	122	5V	121	5V	
	120	5V	119	5V	
	118	0V (5V)	117	0V (5V)	
	116	0V (5V)	115	0V (5V)	
	114	0V (5V)	113	0V (5V)	
	112		111		
	110		109		
	108		107		
	106		105		
2	104	PD REQ	103	PD RDY	1
	102		101		
	100		99		
	98		97		
	96		95		
	94		93		
	92		91		
	90	18V	89	18V	
	88	0V (18V)	87	0V (18V)	
	86	0V (-18V)	85	0V (-18V)	
	84	-18V	83	-18V	
	82	GND	81		
	80		79		
	78	GND	77	GND	
	76	GND	75	GND	
	74	GND	73	HP CH1 (D)	7-8
7-5	72	HP CH1 (X)	71	GND	
	70	GND	69	GND	
	68	GND	67	GND	
	66	GND	65	HP CH2 (D)	7-10
7-9	64	HP CH2 (X)	63	GND	
	62	GND	61	GND	
	60	GND	59	GND	
	58	GND	57		
	56		55		
	54	GND	53		
	52		51		
	50	GND	49		
	48		47		
	46	GND	45		
	44		43		
	42	GND	41		
	40		39		
	38	GND	37		
	36		35		
	34	GND	33		
	32		31	AU LRCK	301-31, 401-31
	30	GND	29	DISK2 A 3/4	301-29
301-26	28	DISK2 A 1/2	27	AU 64FS	301-27, 401-27
	26	GND	25	DISK1 A 3/4	301-25
301-24	24	DISK1 A 1/2	23	AU 128FS	301-23, 401-23
	22	GND	21	SDI2 A 3/4	401-21
401-20	20	SDI2 A 1/2	19	AU 512FS	301-19, 401-19
	18	GND	17	SDI1 A 3/4	401-17
401-16	16	SDI1 A 1/2	15	AUX 1/2	401-15
	14	GND	13	AU DATA	301-13, 401-13
301-12, 401-12	12	AU CS	11	AU SCK	301-11, 401-11
	10	GND	9	PGM A 3/4	301-9, 401-9
301-8, 401-8	8	PGM A 1/2	7		
	6	GND	5		
	4		3		
	2	GND	1		

MB-639

CN4

1	5V
2	5V
3	5V
4	5V
5	5V
6	0V (5V)
7	0V (5V)
8	0V (5V)
9	0V (5V)
10	0V (5V)

MB-639

CN5

1	-5V
2	0V (-5V)
3	8.5V
4	0V (8.5V)
5	-7V
6	0V (-7V)
7	12V
8	0V (12V)

MB-639

CN6

1	18V
2	0V (18V)
3	-18V
4	0V (-18V)
5	GND
6	MUTE
7	PD REQ
8	PD RDY
9	PWR LED (A)
10	PWR LED (K)

7-13, 2, 1, 7-1, 7-2

MB-639

CN8

1	5V
2	5V
3	5V
4	5V
5	5V
6	0V (5V)
7	0V (5V)
8	0V (5V)
9	0V (5V)
10	0V (5V)

RB1 390, RB2 330

- 1 5V
- 2 2 AU LRCK
- 3 3 AU 64FS
- 4 4 AU 128FS
- 5 5 AU 512FS
- 6 6
- 7 7
- 8 8 PGM A 3/4
- 9 9 PGM A 1/2

GND, GND (FP)

5V, 5V-2, 5V-3; 0V (5V), 0V (5V) (FP)

-5V, -5V-2, -5V-3; 0V (-5V), 0V (-5V) (FP)

12V, 12V-2; 0V (12V)

8.5V, 8.5V-2; 0V (8.5V)

-7V, -7V-2; 0V (-7V)

18V, 18V-2; 0V (18V)

-18V, -18V-2; 0V (-18V)

FP-74

CN7

	1	PWR LED (A) (FP)	FL1, FL2 → PWR LED (A) 6-9
	2	PWR LED (K) (FP)	FL2, FL3 → PWR LED (K) 6-10
7-4, 7-7, 7-9, 7-11, 7-12	3	GND (FP)	FL3 → GND
7-3, 7-7, 7-9, 7-11, 7-12	4	GND (FP)	FL4
	5	HP CH1 (D) (FP)	FL5 → HP CH1 (X) 901-72
	6	HP CH1 (D) (FP)	FL6 → HP CH1 (D) 901-73
7-3, 7-4, 7-9, 7-11, 7-12	7	GND (FP)	FL6 → GND
7-3, 7-4, 7-7, 7-11, 7-12	8	GND (FP)	FL7
	9	HP CH2 (X) (FP)	FL8 → HP CH2 (X) 901-64
	10	HP CH2 (D) (FP)	FL9 → HP CH2 (D) 901-65
7-3, 7-4, 7-7, 7-9, 7-12	11	GND (FP)	FL9 → GND
7-3, 7-4, 7-7, 7-9, 7-11	12	GND (FP)	FL10
	13	MUTE (FP)	FL11 → MUTE 6-8
	14		FL12
7-16	18	5V DC	FL13
7-15	18	5V DC	
	17	0V (5V) (FP)	FL14
	16	0V (-5V) (FP)	FL15
7-20	15	-5V DC	
7-19	20	-5V DC	

IC1: IN, GND, OUT → C1 0.1 → 8.5V; C3 10 16V, C4 0.1 → 0V (8.5V)

IC2: IN, GND, OUT → C2 0.1 → -7V; C5 10 16V, C6 0.1 → 0V (-7V)

1 6-8, 101-103, 201-103, 301-103, 401-103, 501-103, 603-103, 701-103, 801-103, 901-103
2 6-7, 101-104, 201-104, 301-104, 401-104, 501-104, 601-104, 701-104, 801-104, 901-104

MB-639 (2/6)
PART NO 1-661-120-12
MODEL ES-7
B-ES7-MB639-12

MOTHER BOARD (3/6)

1

2

3

4

5

VPR-18

CN7		
1	GND	
2	GRI Y7	702-124
3	GND	
4	GRI Y6	702-123
5	GND	
6	GRI Y5	702-121
7	GND	
8	GRI Y4	702-120
9	GND	
10	GRI Y3	702-118
11	GND	
12	GRI Y2	702-117
13	GND	
14	GRI Y1	702-116
15	GND	
16	GRI Y0	702-115
17	GND	
18	GRI C7	702-113
19	GND	
20	GRI C6	702-112
21	GND	
22	GRI C5	702-111
23	GND	
24	GRI C4	702-109
25	GND	
26	GRI C3	702-108
27	GND	
28	GRI C2	702-107
29	GND	
30	GRI C1	702-105
31	GND	
32	GRI C0	702-104
33	PGM CKS-	803-124
34	PGM CKS+	803-123
35	GND	
36	PGM VDS	803-121
37	GND	
38	PGM HDS	803-120
39	GND	
40	PGM OES	803-119

MPU-95

	CN202			
302-124, 402-124	124	BUS GATE2	123	BUS GATE1	302-123, 402-123
	122	GND	121	BUS DIR2	302-121, 402-121
302-120, 402-120	120	BUS DIR1	119	BUS RST	302-119, 402-119
	118	GND	117	DR L.825	302-117, 402-117
302-116, 402-116	116	MPU ACT OUT	115	RF ACT OUT	302-115, 402-115
	114	GND	113	IO ACT OUT	302-113, 402-113
302-112, 402-112	112	RECIN SEL1	111	RECIN SEL0	302-111, 402-111
	110	GND	109	MUTE PB1 3/4	302-109, 402-109
302-108, 402-108	108	MUTE PB2 3/4	107	EB14	302-107, 402-107
	106	GND	105	EB13	302-105, 402-105
302-104, 402-104	104	EB12	103	EB11	302-103, 402-103
	102	GND	101	EB10	302-101, 402-101
302-100, 402-100	100	EB9	99	EB8	302-99, 402-99
	98	GND	97	EB7	302-97, 402-97
302-96, 402-96	96	EB6	95	EB5	302-95, 402-95
	94	GND	93	EB4	302-93, 402-93
302-92, 402-92	92	EB3	91	EB2	302-91, 402-91
	90	GND	89	EB1	302-89, 402-89
302-88, 402-88	88	EB0	87	DB31	302-87, 402-87
	86	GND	85	DB30	302-85, 402-85
302-84, 402-84	84	DB29	83	DB28	302-83, 402-83
	82	GND	81	DB27	302-81, 402-81
302-80, 402-80	80	DB26	79	DB25	302-79, 402-79
	78	GND	77	DB24	302-77, 402-77
302-76, 402-76	76	DB23	75	DB22	302-75, 402-75
	74	GND	73	DB21	302-73, 402-73
302-72, 402-72	72	DB20	71	DB19	302-71, 402-71
	70	GND	69	DB18	302-69, 402-69
302-68, 402-68	68	DB17	67	DB16	302-67, 402-67
	66	GND	65	DB15	302-65, 402-65
302-64, 402-64	64	DB14	63	DB13	302-63, 402-63
	62	GND	61	DB12	302-61, 402-61
302-60, 402-60	60	DB11	59	DB10	302-59, 402-59
	58	GND	57	DB09	302-57, 402-57
302-56, 402-56	56	DB08	55	DB07	302-55, 402-55
	54	GND	53	DB06	302-53, 402-53
302-52, 402-52	52	DB05	51	DB04	302-51, 402-51
	50	GND	49	DB03	302-49, 402-49
302-48, 402-48	48	DB02	47	DB01	302-47, 402-47
	46	GND	45	DB00	302-45, 402-45
302-44, 402-44	44	13.5 CK-	[illegible]	13.5 CK+	302-43, 402-43
	42	GND	41	DB M	302-41, 402-41
302-40, 402-40	40	DB P	39	DI V	302-39, 402-39
	38	GND	37	DI M	302-37, 402-37
302-36, 402-36	36	DI P	35	DI SP3	302-35, 402-35
	34	GND	33	DI SP2	302-33, 402-33
302-32, 402-32	32	L:MPU EX187	31	L:DIO EX197	302-31, 402-31
	30	GND	29	MPU CS A2	302-29, 402-29
302-28, 402-28	28	MPU CS A1	27	MPU CS A0	302-27, 402-27
	26	GND	[illegible]	MPU CS4	302-25, 402-25
302-24, 402-24	24	MPU CS3	23	MPU CS2	302-23, 402-23
	22	GND	21	MPU CS1	302-21, 402-21
302-20, 402-20	20	MPU CS0	19	MPU TX	302-19, 402-19
	18	GND	17	MPU RX	302-17, 402-17
302-16, 402-16	16	MPU CK	15	SY CLK	302-15, 402-15, 103-1, 203-1, 303-1, 403-1
	14	GND	13	MUTE PB2 1/2	302-13, 402-13
302-12, 402-12	12	MUTE PB1 1/2	11	MPU WEP2	302-11, 402-11
	10	GND	9	MPU WEP1	302-9, 402-9
302-8, 402-8	8	MPU WER	7		
	6	GND	5		
	4		3		
	2	GND	1		

A B C D E F G H

RP-89

	CN309			
202-124, 402-124	124	BUS GATE2	123	BUS GATE1	202-123, 402-123
	122	GND	121	BUS DIR2	202-121, 402-121
202-120, 402-120	120	BUS DIR1	119	BUS RST	202-119, 402-119
	118	GND	117	DR L: 625	202-117, 402-117
202-116, 402-116	116	MPU ACT OUT	115	RP ACT OUT	202-115, 402-115
	114	GND	113	IO ACT OUT	202-113, 402-113
202-112, 402-112	112	RECIN SEL1	111	RECIN SEL0	202-111, 402-111
	110	GND	109	MUTE PB1 3/4	202-109, 402-109
202-108, 402-108	108	MUTE PB2 3/4	107	EB14	202-107, 402-107
	106	GND	105	EB13	202-105, 402-105
202-104, 402-104	104	EB12	103	EB11	202-103, 402-103
	102	GND	101	EB10	202-101, 402-101
202-100, 402-100	100	EB9	99	EB8	202-99, 402-99
	98	GND	97	EB7	202-97, 402-97
202-96, 402-96	96	EB6	95	EB5	202-95, 402-95
	94	GND	93	EB4	202-93, 402-93
202-92, 402-92	92	EB3	91	EB2	202-91, 402-91
	90	GND	89	EB1	202-89, 402-89
202-88, 402-88	88	EB0	87	DB31	202-87, 402-87
	86	GND	85	DB30	202-85, 402-85
202-84, 402-84	84	DB29	83	DB28	202-83, 402-83
	82	GND	81	DB27	202-81, 402-81
202-80, 402-80	80	DB26	[illegible]	DB25	202-79, 402-79
	78	GND	77	DB24	202-77, 402-77
202-76, 402-76	76	DB23	75	DB22	202-75, 402-75
	74	GND	73	DB21	202-73, 402-73
202-72, 402-72	72	DB20	71	DB19	202-71, 402-71
	70	GND	69	DB18	202-69, 402-69
202-68, 402-68	68	DB17	67	DB16	202-67, 402-67
	[illegible]	GND	65	DB15	202-65, 402-65
202-64, 402-64	64	DB14	63	DB13	202-63, 402-63
	62	GND	61	DB12	202-61, 402-61
202-60, 402-60	60	DB11	59	DB10	202-59, 402-59
	58	GND	57	DB09	202-57, 402-57
202-56, 402-56	56	DB08	55	DB07	202-55, 402-55
	54	GND	53	DB06	202-53, 402-53
202-52, 402-52	52	DB05	51	DB04	202-51, 402-51
	50	GND	49	DB03	202-49, 402-49
202-48, 402-48	48	DB02	47	DB01	202-47, 402-47
	46	GND	45	DB00	202-45, 402-45
202-44, 402-44	44	13.5 CK-	43	13.5 CK+	202-43, 402-43
	42	GND	41	DB H	202-41, 402-41
202-40, 402-40	40	DB F	39	DI V	202-39, 402-39
	38	GND	37	DI H	202-37, 402-37
202-36, 402-36	36	DI F	[illegible]	DI SP3	202-35, 402-35
	34	GND	33	DI SP2	202-33, 402-33
202-32, 402-32	32	L:MPU EXIST	31	L:DIO EXIST	202-31, 402-31
	30	GND	29	MPU CS A2	202-29, 402-29
202-28, 402-28	[illegible]	MPU CS A1	27	MPU CS A0	202-27, 402-27
	26	GND	25	MPU CS4	202-25, 402-25
202-24, 402-24	24	MPU CS3	23	MPU CS2	202-23, 402-23
	22	GND	21	MPU CS1	202-21, 402-21
202-20, 402-20	20	MPU CS0	19	MPU TX	202-19, 402-19
	18	GND	17	MPU RX	202-17, 402-17
202-16, 402-16	16	MPU CK	15	SY CLK	202-15, 402-15, 103-1, 203-1, 303-1, 403-1
	14	GND	13	MUTE PB2 1/2	202-13, 402-13
202-12, 402-12	12	MUTE PB1 1/2	11	MPU WEP2	202-11, 402-11
	10	GND	9	MPU WEP1	202-9, 402-9
202-8, 402-8	8	MPU WER	7		
	6	GND	5		
	4		3		
	2	GND	1		

IO-119

	CN402			
202-124, 302-124	124	BUS GATE2	123	BUS GATE1	202-123, 302-123
	122	GND	121	BUS DIR2	202-121, 302-121
202-120, 302-120	120	BUS DIR1	119	BUS RST	202-119, 302-119
	118	GND	117	DR L: 625	202-117, 302-117
202-116, 302-116	116	MPU ACT OUT	115	RP ACT OUT	202-115, 302-115
	114	GND	113	IO ACT OUT	202-113, 302-113
202-112, 302-112	112	RECIN SEL1	111	RECIN SEL0	202-111, 302-111
	110	GND	109	MUTE PB1 3/4	202-109, 302-109
202-108, 302-108	108	MUTE PB2 3/4	107	EB14	202-107, 302-107
	106	GND	105	EB13	202-105, 302-105
202-104, 302-104	104	EB12	103	EB11	202-103, 302-103
	102	GND	101	EB10	202-101, 302-101
202-100, 302-100	100	EB9	[illegible]	EB8	202-99, 302-99
	98	GND	97	EB7	202-97, 302-97
202-96, 302-96	96	EB6	95	EB5	202-95, 302-95
	94	GND	93	EB4	202-93, 302-93
202-92, 302-92	92	EB3	91	EB2	202-91, 302-91
	90	GND	89	EB1	202-89, 302-89
202-88, 302-88	[illegible]	EB0	87	DB31	202-87, 302-87
	[illegible]	GND	85	DB30	202-85, 302-85
202-84, 302-84	84	DB29	83	DB28	202-83, 302-83
	[illegible]	GND	[illegible]	DB27	202-81, 302-81
202-80, 302-80	80	DB26	79	DB25	202-79, 302-79
	78	GND	77	DB24	202-77, 302-77
202-76, 302-76	76	DB23	75	DB22	202-75, 302-75
	74	GND	73	DB21	202-73, 302-73
202-72, 302-72	72	DB20	71	DB19	202-71, 302-71
	70	GND	69	DB18	202-69, 302-69
202-68, 302-68	68	DB17	67	DB16	202-67, 302-67
	66	GND	65	DB15	202-65, 302-65
202-64, 302-64	64	DB14	63	DB13	202-63, 302-63
	62	GND	61	DB12	202-61, 302-61
202-60, 302-60	60	DB11	59	DB10	202-59, 302-59
	58	GND	57	DB09	202-57, 302-57
202-56, 302-56	56	DB08	55	DB07	202-55, 302-55
	54	GND	53	DB06	302-53, 302-53
202-52, 302-52	52	DB05	51	DB04	202-51, 302-51
	50	GND	49	DB03	202-49, 302-49
202-48, 302-48	48	DB02	47	DB01	202-47, 302-47
	46	GND	45	DB00	202-45, 302-45
202-44, 302-44	44	13.5 CK-	43	13.5 CK+	202-43, 302-43
	42	GND	41	DB H	202-41, 302-41
202-40, 302-40	40	DB F	39	DI V	202-39, 302-39
	38	GND	37	DI H	202-37, 302-37
202-36, 302-36	36	DI F	35	DI SP3	202-35, 302-35
	34	GND	33	DI SP2	202-33, 302-33
202-32, 302-32	32	L:MPU EXIST	31	L:DIO EXIST	202-31, 302-31
	30	GND	29	MPU CS A2	202-29, 302-29
202-28, 302-28	[illegible]	MPU CS A1	27	MPU CS A0	202-27, 302-27
	26	GND	25	MPU CS4	202-25, 302-25
202-24, 302-24	24	MPU CS3	23	MPU CS2	202-23, 302-23
	22	GND	21	MPU CS1	202-21, 302-21
202-20, 302-20	20	MPU CS0	19	MPU TX	202-19, 302-19
	18	GND	17	MPU RX	202-17, 302-17
202-16, 302-16	16	MPU CK	15	SY CLK	202-15, 202-15, 103-1, 203-1, 303-1, 403-1
	14	GND	13	MUTE PB2 1/2	202-13, 302-13
202-12, 302-12	12	MUTE PB1 1/2	11	MPU WEP2	202-11, 302-11
	10	GND	9	MPU WEP1	202-9, 302-9
202-8, 302-8	8	MPU WER	7	SM CS IO	701-7
	6	GND	5		
	4		3	SM S CLK	601-3, 601-3, 701-3
	2	GND	1	SM S DATA	601-1, 601-1, 701-1

MB-639 (3/6)
PART NO 1-661-120-12
MODEL ES-7
B-ES7-MB639-12

MOTHER BOARD (4/6)

FM-43/FM-44/IF-547

CN701

2-2	124	GRI Y7	123	GRI Y6	2-4
	122	GND	121	GRI Y5	2-6
2-8	120	GRI Y4	119	GRI Y3	2-10
	118	GND	117	GRI Y2	2-12
2-14	116	GRI Y1	115	GRI Y0	2-16
	114	GND	113	GRI C7	2-18
2-20	112	GRI C6	111	GRI C5	2-22
	110	GND	109	GRI C4	2-24
2-26	108	GRI C3	107	GRI C2	2-28
	106	GND	105	GRI C1	2-30
2-32	104	GRI C0	103	DME A16 (T2BK5)	802-103
802-102	102	DME A15 (T2BK4)	101	DME A14 (T2BK3)	802-101
802-100	100	DME A13 (T2BK2)	99	DME A12 (T2BK1)	802-99
802-98	98	DME A11 (T2BK0)	97	DME A10 (RA10)	802-97
802-96	96	DME A9 (RA9)		DME A8 (RA8)	802-95
802-94	94	DME A7 (RA7)		DME A6 (RA6)	802-93
802-92	92	DME A5 (RA5)	91	DME A4 (RA4)	802-91
802-90	90	DME A3 (RA3)	89	DME A2 (RA2)	802-89
802-88	88	DME A1 (RA1)	87	DME A0 (REGW)	802-87
802-86	86	UBE (VE RESET)	85	OPT	802-85
802-84	84	MTRX (T1BK5)	83	ORG1 (T1BK4)	802-83
802-82	82	ORG2 (T1BK3)	81	ATBW (T1BK2)	802-81
802-80	80	ATB (T1BK1)	79	T1BK0	802-79
802-78	78	TBTRG	77	TBBSY	802-77
802-76	76	XC1	75	XC2	802-75
802-74	74	XC3	73	XC4	802-73
802-72	72	XC5	71	TEST	802-71
802-70	70	DME D15 (RD15)	69	DME D14 (RD14)	802-69
802-68	68	DME D13 (RD13)	67	DME D12 (RD12)	802-67
802-66	66	DME D11 (RD11)	65	DME D10 (RD10)	802-65
802-64	64	DME D9 (RD9)	63	DME D8 (RD8)	802-63
802-62	62	DME D7 (RD7)	61	DME D6 (RD6)	802-61
802-60	60	DME D5 (RD5)	59	DME D4 (RD4)	802-59
802-58	58	DME D3 (RD3)	57	DME D2 (RD2)	802-57
802-56	56	DME D1 (RD1)	55	DME D0 (RD0)	802-55
	54	GND	53	FGY7	802-53
802-52	52	FGY6	51	FGY5	802-51
802-50	50	FGY4	49	FGY3	802-49
802-48	48	FGY2	47	FGY1	802-47
	46	GND	45	FGY0	802-45
802-44	44	FGV7 (FGC7)	43	FGV6 (FGC6)	802-43
	42	FGV5 (FGC5)	41	FGV4 (FGC4)	802-41
802-40	40	FGV3 (FGC3)	39	FGV2 (FGC2)	802-39
	38	GND	37	FGV1 (FGC1)	802-37
802-36	36	FGV0 (FGC0)	35	FGU7 (FGK7)	802-35
802-34	34	FGU6 (FGK6)	33	FGU5 (FGK5)	802-33
802-32	32	FGU4 (FGK4)	31	FGU3 (FGK3)	802-31
802-30	30	FGU2 (FGK2)	29	FGU1 (FGK1)	802-29
802-28	28	FGU0 (FGK0)	27	BGY7	802-27
	26	GND	25	BGY6	802-25
802-24	24	BGY5	23	BGY4	802-23
802-22	22	BGY3	21	BGY2	802-21
802-20	20	BGY1	19	BGY0	802-19
	18	GND	17	BGV7 (BGC7)	802-17
802-16	16	BGV6 (BGC6)	15	BGV5 (BGC5)	802-15
802-14	14	BGV4 (BGC4)	13	BGV3 (BGC3)	802-13
802-12	12	BGV2 (BGC2)	11	BGV1 (BGC1)	802-11
	10	GND	9	BGV0 (BGC0)	802-9
802-6	8	BGU7	7	BGU6	802-7
802-5	6	BGU5	5	BGU4	802-5
802-4	4	BGU3	3	BGU2	802-3
802-2	2	BGU1	1	BGU0	802-1

MY-74/MY-75

CN302

	124		123		
	122	GND	121		
	120		119		
	118	GND	117		
	116		115		
	114	GND	113		
	112		111		
	110	GND	109		
	108		107		
	106	GND	105		
	104		103	DME A15 (T2BK5)	702-103
702-102	102	DME A15 (T2BK4)	101	DME A14 (T2BK3)	702-101
702-100	100	DME A13 (T2BK2)	99	DME A12 (T2BK1)	702-99
702-98	98	DME A11 (T2BK0)	97	DME A10 (RA10)	702-97
702-96	96	DME A9 (RA9)		DME A8 (RA8)	702-95
702-94	94	DME A7 (RA7)		DME A6 (RA6)	702-93
702-92	92	DME A5 (RA5)	91	DME A4 (RA4)	702-91
702-90	90	DME A3 (RA3)	89	DME A2 (RA2)	702-89
702-88	88	DME A1 (RA1)	87	DME A0 (REGW)	702-87
702-86	86	UBE (VE RESET)	85	OPT	702-85
702-84	84	MTRX (T1BK5)	83	ORG1 (T1BK4)	702-83
702-82	82	ORG2 (T1BK3)	81	ATBW (T1BK2)	702-81
702-80	80	ATB (T1BK1)	79	T1BK0	702-79
702-78	78	TBTRG	77	TBBSY	702-77
702-76	76	XC1	75	XC2	702-75
702-74	74	XC3	73	XC4	702-73
702-72	72	XC5	71	TEST	702-71
702-70	70	DME D15 (RD15)	69	DME D14 (RD14)	702-69
702-68	68	DME D13 (RD13)	67	DME D12 (RD12)	702-67
702-66	66	DME D11 (RD11)	65	DME D10 (RD10)	702-65
702-64	64	DME D9 (RD9)	63	DME D8 (RD8)	702-63
702-62	62	DME D7 (RD7)	61	DME D6 (RD6)	702-61
702-60	60	DME D5 (RD5)	59	DME D4 (RD4)	702-59
702-58	58	DME D3 (RD3)	57	DME D2 (RD2)	702-57
702-56	56	DME D1 (RD1)	55	DME D0 (RD0)	702-55
	54	GND	53	FGY7	702-53
702-52	52	FGY6	51	FGY5	702-51
702-50	50	FGY4	49	FGY3	702-49
702-48	48	FGY2	47	FGY1	702-47
	46	GND	45	FGY0	702-45
702-44	44	FGV7 (FGC7)	43	FGV6 (FGC6)	702-43
	42	FGV5 (FGC5)	41	FGV4 (FGC4)	702-41
702-40	40	FGV3 (FGC3)	39	FGV2 (FGC2)	702-39
	38	GND	37	FGV1 (FGC1)	702-37
702-36	36	FGV0 (FGC0)	35	FGU7 (FGK7)	702-35
702-34	34	FGU6 (FGK6)	33	FGU5 (FGK5)	702-33
702-32	32	FGU4 (FGK4)	31	FGU3 (FGK3)	702-31
702-30	30	FGU2 (FGK2)	29	FGU1 (FGK1)	702-29
702-28	28	FGU0 (FGK0)	27	BGY7	702-27
	26	GND	25	BGY6	702-25
702-24	24	BGY5	23	BGY4	702-23
702-22	22	BGY3	21	BGY2	702-21
702-20	20	BGY1	19	BGY0	702-19
	18	GND	17	BGV7 (BGC7)	702-17
702-16	16	BGV6 (BGC6)	15	BGV5 (BGC5)	702-15
702-14	14	BGV4 (BGC4)	13	BGV3 (BGC3)	702-13
702-12	12	BGV2 (BGC2)	11	BGV1 (BGC1)	702-11
	10	GND	9	BGV0 (BGC0)	702-9
702-8	8	BGU7	7	BGU6	702-7
702-6	6	BGU5	5	BGU4	702-5
702-4	4	BGU3	3	BGU2	702-3
702-2	2	BGU1	1	BGU0	702-1

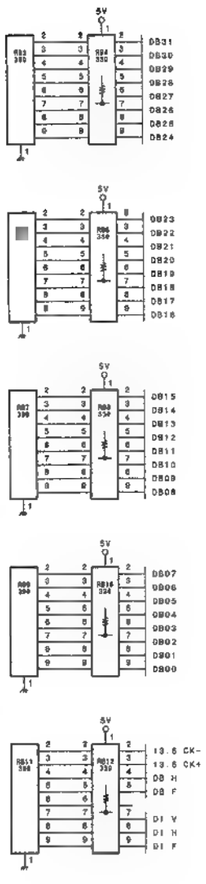

MB-639 (4/6)
PART NO 1-661-120-12
MODEL ES-7
B-ES7-MB639-12

MOTHER BOARD (5/6)

1

2

3

4

5

BF-54

CN3

1	BF RST	103-124
2	GND	
3	BF INT 1	103-123
4	GND	
5	BF BUSY	103-121
6	GND	
7	BF MR	103-120
8	GND	
9	BF MW	103-118
10	GND	
11	BF MCS	103-117
12	GND	
13	BF INT 2	103-116
14	GND	
15	BF BRET	
16	GND	
17		
18	GND	
19	BF A0	103-112
20	BF A1	103-111
21	BF A2	103-110
22	BF A3	103-109
23	BF A4	103-107
24	BF A5	103-105
25	BF A6	103-104
26	BF A7	103-103
27	BF A8	103-101
28	BF A9	103-100
29	BF A10	103-99
30	BF A11	103-97
31	GND	
32	GND	
33	BF D0	103-96
34	BF D1	103-95
35	BF D2	103-93
36	BF D3	103-92
37	BF D4	103-91
38	BF D5	103-89
39	BF D6	103-88
40	BF D7	103-87

SY-219

CN103

3-1	124	BF RST	123	BF INT 1	3-3
	122	GND	121	BF BUSY	3-5
3-7	120	BF MR	119	BF MW	3-9
	118	GND	117	BF MCS	3-11
3-13	116	BF INT 2	115		
	114	GND	113	SY TEST	803-124
3-18	112	BF A0	111	BF A1	3-20
	110	GND	109	BF A2	3-21
3-22	108	BF A3	107	BF A4	3-23
	106	GND	105	BF A5	3-24
3-25	104	BF A6	103	BF A7	3-26
	102	GND	101	BF A8	3-27
3-28	100	BF A9	99	BF A10	3-29
	98	GND	97	BF A11	3-30
3-33	96	BF D0	95	BF D1	3-34
	94	GND	93	BF D2	3-35
3-36	92	BF D3	91	BF D4	3-37
	90	GND	89	BF D5	3-38
3-39	88	BF D6	87	BF D7	3-40
	86	GND	85		
	84		83		
	82	GND	81		
	80		79		
	78	GND	77		
	76		75		
	74	GND	73		
	72		71		
	70	GND	69		
	68		67		
	66	GND	65		
	64		63		
	62	GND	61		
	60		59		
	58	GND	57		
	56		55		
	54	GND	53		
	52		51		
	50	GND	49	PGM OE?	203-49, 303-49, 403-49, 603-49
	48		47	EXT LOCK	603-35
	46	GND	45	FLD1	603-36
	44		43	CF PLE	203-43, 303-43, 403-43, 603-43
	42	GND	41	SY RST	203-41, 303-41, 403-41, 703-41, 903-41
203-40, 303-40, 403-40, 703-40, 903-40	40	SY A14	39	SY A13	203-39, 303-39, 403-39, 703-39, 903-39
	38	GND	37	SY A12	203-37, 303-37, 403-37, 703-37, 903-37
203-36, 303-36, 403-36, 703-36, 903-36	36	SY A11	35	SY A10	203-35, 303-35, 403-35, 703-35, 903-35
	34	GND	33	SY A9	203-33, 303-33, 403-33, 703-33, 903-33
203-32, 303-32, 403-32, 703-32, 903-32	32	SY A8	31	SY A7	203-31, 303-31, 403-31, 703-31, 903-31
	30	GND	29	SY A6	203-29, 303-29, 403-29, 703-29, 903-29
203-28, 303-28, 403-28, 703-28, 903-28	28	SY A5	27	SY A4	203-27, 303-27, 403-27, 703-27, 903-27
	26	GND	25	SY A3	203-25, 303-25, 403-25, 703-25, 903-25
203-24, 303-24, 403-24, 703-24, 903-24	24	SY A2	23	SY A1	203-23, 303-23, 403-23, 703-23, 903-23
	22	GND	21	SY D7	203-21, 303-21, 403-21, 703-21, 903-21
203-20, 303-20, 403-20, 703-20, 903-20	20	SY D6	19	SY D5	203-19, 303-19, 403-19, 703-19, 903-19
	18	GND	17	SY D4	203-17, 303-17, 403-17, 703-17, 903-17
203-16, 303-16, 403-16, 703-16, 903-16	16	SY D3	15	SY D2	203-15, 303-15, 403-15, 703-15, 903-15
	14	GND	13	SY D1	203-13, 303-13, 403-13, 703-13, 903-13
203-12, 303-12, 403-12, 703-12, 903-12	12	SY D0	11	RD	203-11, 303-11, 403-11, 703-11, 903-11
	10	GND	9	LD WR	203-9, 303-9, 403-9, 703-9, 903-9
203-8, 303-8, 403-8, 703-8, 903-8	8	CS IO	7	CS DR	203-7, 303-7, 403-7, 703-7, 903-7
	6	GND	5	CS SW	203-5, 303-5, 403-5, 703-5, 903-5
203-4, 303-4, 403-4, 703-4, 903-4	4	CS MX	3	WAIT	203-3, 303-3, 403-3, 703-3, 903-3
	2	GND	1	SY CLK	203-15, 303-15, 403-15, 703-1, 903-1, 403-1

MPU-95

CN303

124		123		
122	GND	121		
120		119		
118	GND	117		
116		115		
114	GND	113		
112		111		
110	GND	109		
108		107		
106	GND	105		
104		103		
102	GND	101		
100		99		
98	GND	97		
96		95		
94	GND	93		
92		91		
90	GND	89		
88		87		
86	GND	85		
84		83		
82	GND	81		
80		79		
78	GND	77		
76		75		
74	GND	73		
72		71	PGM C7	303-71, 403-71, 603-71, 703-71, 803-71
70	GND	69	PGM C8	303-69, 403-59, 603-59, 703-69, 803-69
68	GND	67	PGM C4	303-67, 403-57, 603-67, 703-67, 803-67
66	GND	65	PGM C5	303-65, 403-55, 603-65, 703-65, 803-65
64	GND	63	PGM C2	303-63, 403-53, 603-63, 703-63, 803-63
62	GND	61	PGM C0	303-61, 403-51, 603-61, 703-61, 803-61
60	GND	59	PGM Y7	303-59, 403-59, 603-59, 703-59, 803-59
58	GND	57	PGM Y6	303-57, 403-57, 603-57, 703-57, 803-57
56	GND	55	PGM Y5	303-55, 403-55, 603-55, 703-55, 803-55
54	GND	53	PGM Y2	303-53, 403-53, 603-53, 703-53, 803-53
52	GND	51	PGM Y1	303-51, 403-51, 603-51, 703-51, 803-51
50	GND	49	PGM OE2	103-49, 303-49, 403-49, 603-49
48	GND	47	PGM VD2	303-47, 403-47, 603-47
46	GND	45	PGM CK2+	303-45, 403-45, 603-45
44	GND	43	CF PLS	103-43, 303-43, 403-43, 603-43
42	GND	41	SY RST	103-41, 303-41, 403-41, 703-41, 903-41
40	SY A14	39	SY A13	103-39, 303-39, 403-39, 703-39, 903-39
38	GND	37	SY A12	103-37, 303-37, 403-37, 703-37, 903-37
36	SY A11	35	SY A10	103-35, 303-35, 403-35, 703-35, 903-35
34	GND	33	SY A9	103-33, 303-33, 403-33, 703-33, 903-33
32	SY A8	31	SY A7	103-31, 303-31, 403-31, 703-31, 903-31
30	GND	29	SY A6	103-29, 303-29, 403-29, 703-29, 903-29
28	SY A5	27	SY A4	103-27, 303-27, 403-27, 703-27, 903-27
26	GND	25	SY A3	103-25, 303-25, 403-25, 703-25, 903-25
24	SY A2	23	SY A1	103-23, 303-23, 403-23, 703-23, 903-23
22	GND	21	SY D7	103-21, 303-21, 403-21, 703-21, 903-21
20	SY D6	19	SY D5	103-19, 303-19, 403-19, 703-19, 903-19
18	GND	17	SY D4	103-17, 303-17, 403-17, 703-17, 903-17
16	SY D3	15	SY D2	103-15, 303-15, 403-15, 703-15, 903-15
14	GND	13	SY D1	103-13, 303-13, 403-13, 703-13, 903-13
12	SY D0	11	RD	103-11, 303-11, 403-11, 703-11, 903-11
10	GND	9	LD WR	103-9, 303-9, 403-9, 703-9, 903-9
8	CS IO	7	CS DR	103-7, 303-7, 403-7, 703-7, 903-7
6	GND	5	CS SW	103-5, 303-5, 403-5, 703-5, 903-5
4	CS MX	3	WAIT	103-3, 303-3, 403-3, 703-3, 903-3
2	GND	1	SY CLK	203-15, 303-15, 403-13, 103-1, 303-1, 403-1

A B C D E F G H

RP-89

CN303

403-124, 503-124, 703-124	124	VIN2 CK	123	VIN2 OE	403-123, 503-123, 703-123
	122	GND	121	VIN2 VD	403-121, 503-121, 703-121
403-120, 503-120, 703-120	120	VIN2 HD	119	VIN2 C7	403-119, 503-119, 703-119
	118	GND	117	VIN2 C6	403-117, 503-117, 703-117
403-116, 503-116, 703-116	116	VIN2 C5	115	VIN2 C4	403-115, 503-115, 703-115
	114	GND	113	VIN2 C3	403-113, 503-113, 703-113
403-112, 503-112, 703-112	112	VIN2 C2	111	VIN2 C1	403-111, 503-111, 703-111
	110	GND	109	VIN2 C0	403-109, 503-109, 703-109
403-108, 503-108, 703-108	108	VIN2 Y7	107	VIN2 Y6	403-107, 503-107, 703-107
	106	GND	105	VIN2 Y5	403-105, 503-105, 703-105
403-104, 503-104, 703-104	104	VIN2 Y4	103	VIN2 Y3	403-103, 503-103, 703-103
	102	GND	101	VIN2 Y2	403-101, 503-101, 703-101
403-100, 503-100, 703-100	100	VIN2 Y1	99	VIN2 Y0	403-99, 503-99, 703-99
	98	GND	97	VIN1 Y7	403-97, 503-97, 703-97
403-96, 503-96, 703-96	96	VIN1 Y6	95	VIN1 Y5	403-95, 503-95, 703-95
	94	GND	■	VIN1 Y4	403-93, 503-93, 703-93
403-92, 503-92, 703-92	92	VIN1 Y3	91	VIN1 Y2	403-91, 503-91, 703-91
	90	GND	89	VIN1 Y1	403-89, 503-89, 703-89
403-88, 503-88, 703-88	88	VIN1 Y0	87	VIN1 C7	403-87, 503-87, 703-87
	86	GND	85	VIN1 C6	403-85, 503-85, 703-85
403-84, 503-84, 703-84	84	VIN1 C5	83	VIN1 C4	403-83, 503-83, 703-83
	82	GND	81	VIN1 C3	403-81, 503-81, 703-81
403-80, 503-80, 703-80	80	VIN1 C2	79	VIN1 C1	403-79, 503-79, 703-79
	78	GND	77	VIN1 C0	403-77, 503-77, 703-77
403-76, 503-76, 703-76	76	VIN1 CK	75	VIN1 OE	403-75, 503-75, 703-75
	74	GND	73	VIN1 VD	403-73, 503-73, 703-73
403-72, 503-72, 703-72	72	VIN1 HD	71	PGM C7	203-71, 403-71, 503-71, 703-71, 803-71
	70	GND	69	PGM C6	203-69, 403-69, 503-69, 703-69, 803-69
203-68, 403-68, 503-68, 703-68, 803-68	■	PGM C5	67	PGM C4	203-67, 403-67, 503-67, 703-67, 803-67
	■	GND	65	PGM C3	203-65, 403-65, 503-65, 703-65, 803-65
203-64, 403-64, 503-64, 703-64, 803-64	64	PGM C2	63	PGM C1	203-63, 403-63, 503-63, 703-63, 803-63
	62	GND	61	PGM C0	203-61, 403-61, 503-61, 703-61, 803-61
203-60, 403-60, 503-60, 703-60, 803-60	60	PGM Y7	■	PGM Y6	203-59, 403-59, 503-59, 703-59, 803-59
	58	GND	57	PGM Y5	203-57, 403-57, 503-57, 703-57, 803-57
203-56, 403-56, 503-■■, 703-56, 803-56	56	PGM Y4	55	PGM Y3	203-55, 403-55, 503-55, 703-55, 803-55
	54	GND	53	PGM Y2	203-53, 403-53, 503-53, 703-53, 803-53
203-52, 403-52, 503-52, 703-52, 803-52	52	PGM Y1	51	PGM Y0	203-51, 403-51, 503-51, 703-51, 803-51
	■	GND	49	PGM OE2	203-49, 203-49, 403-49, 503-49, 803-49
203-48, 403-48, 503-48	48	PGM VD2	47	PGM CK2-	203-47, 403-47, 503-47
	46	GND	45	PGM CK2+	203-45, 403-45, 503-45
203-44, 403-44, 503-44	44	PGM HD2	43	CF PLS	103-43, 203-43, 403-43, 503-43
	42	GND	41	SY RST	103-41, 203-41, 403-41, 703-41, 903-41
103-40, 203-40, 403-40, 703-40, 903-40	40	SY A14	39	SY A13	103-39, 203-39, 403-39, 703-39, 903-39
	■	GND	37	SY A12	103-37, 203-37, 403-37, 703-37, 903-37
103-36, 203-36, 403-36, 703-36, 903-36	■	SY A11	35	SY A10	103-35, 203-35, 403-35, 703-35, 903-35
	34	GND	33	SY A9	103-33, 203-33, 403-33, 703-33, 903-33
103-32, 203-32, 403-32, 703-32, 903-32	32	SY A8	31	SY A7	103-31, 203-31, 403-31, 703-31, 903-31
	30	GND	29	SY A6	103-29, 203-29, 403-29, 703-29, 903-29
103-28, 203-28, 403-28, 703-28, 903-28	28	SY A5	27	SY A4	103-27, 203-27, 403-27, 703-27, 903-27
	26	GND	25	SY A3	103-25, 203-25, 403-25, 703-25, 903-25
103-24, 203-24, 403-24, 703-24, 903-24	24	SY A2	23	SY A1	103-23, 203-23, 403-23, 703-23, 903-23
	22	GND	■	SY D7	103-21, 203-21, 403-21, 703-21, 903-21
103-20, 203-20, 403-20, 703-20, 903-20	■	SY ■	19	SY D6	103-19, 203-19, 403-19, 703-19, 903-19
	18	GND	17	SY D4	103-17, 203-17, 403-17, 703-17, 903-17
103-16, 203-16, 403-16, 703-16, 903-16	16	SY D3	15	SY D2	103-15, 203-15, 403-15, 703-15, 903-15
	14	GND	13	SY D1	103-13, 203-13, 403-13, 703-13, 903-13
103-12, 203-12, 403-12, 703-12, 903-12	12	SY D0	11	RD	103-11, 203-11, 403-11, 703-11, 903-11
	■	GND	9	LD WR	103-9, 203-9, 403-9, 703-9, 903-9
103-8, 203-8, 403-8, 703-8, 903-8	8	CS IO	7	CS DR	103-7, 203-7, 403-7, 703-7, 903-7
	6	GND	5	CS SW	103-5, 203-5, 403-5, 703-5, 903-5
103-4, 203-4, 403-4, 703-4, 903-4	4	CS MX	3	WAIT	103-3, 203-3, 403-3, 703-3, 903-3
	2	GND	1	SY CLK	202-15, 302-15, 402-15, 103-1, 202-1, 403-1

IO-119

CN403

303-124, 503-124, 703-124	124	VIN2 CK	123	VIN2 OE	303-123, 503-123, 703-123
	122	GND	121	VIN2 VD	303-121, 503-121, 703-121
303-120, 503-120, 703-120	120	VIN2 HD	119	VIN2 C7	303-119, 503-119, 703-119
	118	GND	117	VIN2 C6	303-117, 503-117, 703-117
503-115, 503-116, 703-116	116	VIN2 C5	115	VIN2 C4	303-115, 503-116, 703-115
	114	GND	113	VIN2 C3	303-113, 503-113, 703-113
303-112, 503-112, 703-112	112	VIN2 C2	111	VIN2 C1	303-111, 503-111, 703-111
	110	GND	109	VIN2 C0	303-109, 503-109, 703-109
303-108, 503-108, 703-108	108	VIN2 Y7	107	VIN2 Y6	303-107, 503-107, 703-107
	106	GND	105	VIN2 Y5	303-105, 503-105, 703-105
303-104, 503-104, 703-104	104	VIN2 Y4	103	VIN2 Y3	303-103, 503-103, 703-103
	102	GND	101	VIN2 Y2	303-101, 503-101, 703-101
303-100, 503-100, 703-100	100	VIN2 Y1	99	VIN2 Y0	303-99, 503-99, 703-99
	98	GND	97	VIN1 Y7	303-97, 503-97, 703-97
303-96, 503-96, 703-96	96	VIN1 Y6	95	VIN1 Y5	303-95, 503-95, 703-95
	94	GND	93	VIN1 Y4	303-93, 503-93, 703-93
303-92, 503-92, 703-92	92	VIN1 Y3	91	VIN1 Y2	303-91, 503-91, 703-91
	90	GND	89	VIN1 Y1	303-89, 503-89, 703-89
303-88, 503-88, 703-88	88	VIN1 Y0	87	VIN1 C7	303-87, 503-87, 703-87
	86	GND	85	VIN1 C6	303-85, 503-85, 703-85
303-84, 503-84, 703-84	84	VIN1 C5	83	VIN1 C4	303-83, 503-83, 703-83
	82	GND	81	VIN1 C3	303-81, 503-81, 703-81
303-80, 503-80, 703-80	80	VIN1 C2	79	VIN1 C1	303-79, 503-79, 703-79
	78	GND	77	VIN1 C0	303-77, 503-77, 703-77
303-76, 503-76, 703-76	76	VIN1 CK	75	VIN1 OE	303-75, 503-75, 703-75
	74	GND	73	VIN1 VD	303-73, 503-73, 703-73
303-72, 503-72, 703-72	72	VIN1 HD	71	PGM C7	203-71, 303-71, 403-71, 703-71, 803-71
	70	GND	69	PGM C6	203-69, 303-69, 403-69, 703-69, 803-69
203-68, 303-68, 403-68, 503-68, 703-68, 803-68	68	PGM C5	67	PGM C4	203-67, 303-67, 403-67, 703-67, 803-67
	66	GND	■■	PGM C3	203-65, 303-65, 403-65, 703-65, 803-65
203-64, 303-64, 403-64, 703-64, 803-64	64	PGM C2	■■	PGM C1	203-63, 303-63, 403-63, 703-63, 803-63
	62	GND	■■	PGM C0	203-61, 303-61, 403-61, 703-61, 803-61
203-60, 303-60, 403-60, 703-60, 803-60	60	PGM Y7	59	PGM Y6	203-59, 303-59, 403-59, 703-59, 803-59
	58	GND	57	PGM Y5	203-57, 303-57, 403-57, 703-57, 803-57
203-56, 303-56, 403-56, 703-56, 803-56	56	PGM Y4	55	PGM Y3	203-55, 303-55, 403-55, 703-55, 803-55
	54	GND	53	PGM Y2	203-53, 303-53, 403-53, 703-53, 803-53
203-52, 303-52, 403-52, 703-52, 803-52	52	PGM Y1	51	PGM Y0	203-51, 303-51, 403-51, 703-51, 803-51
	50	GND	49	PGM OE2	103-49, 203-49, 303-49, 403-49, 803-49
203-48, 303-48, 403-48	48	PGM VD2	47	PGM CK2-	203-47, 303-47, 403-47
	46	GND	■	PGM CK2+	203-45, 303-45, 403-45
203-44, 303-44, 403-44	44	PGM HD2	43	CF PLS	103-43, 203-43, 303-43, 403-43
	42	GND	41	SY RST	103-41, 203-41, 303-41, 703-41, 903-41
103-40, 203-40, 303-40, 703-40, 903-40	40	SY A14	39	SY A13	103-39, 203-39, 303-39, 703-39, 903-39
	38	GND	37	SY A12	103-37, 203-37, 303-37, 703-37, 903-37
103-36, 203-36, 303-36, 703-36, 903-36	36	SY A11	35	SY A10	103-35, 203-35, 303-35, 703-35, 903-35
	34	GND	33	SY A9	103-33, 203-33, 303-33, 703-33, 903-33
103-32, 203-32, 303-32, 703-32, 903-32	32	SY A8	31	SY A7	103-31, 203-31, 303-31, 703-31, 903-31
	30	GND	29	SY A6	103-29, 203-29, 303-29, 703-29, 903-29
103-28, 203-28, 303-28, 703-28, 903-28	28	SY A5	27	SY A4	103-27, 203-27, 303-27, 703-27, 903-27
	26	GND	■	SY A3	103-25, 203-25, 303-25, 703-25, 903-25
103-24, 203-24, 303-24, 703-24, 903-24	24	SY A2	23	SY A1	103-23, 203-23, 303-23, 703-23, 903-23
	22	GND	21	SY D7	103-21, 203-21, 303-21, 703-21, 903-21
103-■, 203-20, 303-20, 703-20, 903-20	20	■ D6	19	SY D5	103-19, 203-19, 303-19, 703-19, 903-19
	18	GND	17	SY D4	103-17, 203-17, 303-17, 703-17, 903-17
103-16, 203-16, 303-16, 703-16, 903-16	16	SY ■	15	SY D2	103-15, 203-15, 303-15, 703-15, 903-15
	14	GND	13	SY D1	103-13, 203-13, 303-13, 703-13, 903-13
103-12, 203-12, 303-12, 703-12, 903-12	12	SY ■	11	RD	103-11, 203-11, 303-11, 703-11, 903-11
	10	GND	9	LD WR	103-9, 203-9, 303-9, 703-9, 903-9
103-8, 203-8, 303-8, 703-8, 903-8	8	CS IO	7	CS DR	103-7, 203-7, 303-7, 703-7, 903-7
	6	GND	5	CS SW	103-5, 203-5, 303-5, 703-5, 903-5
103-4, 203-4, 303-4, 703-4, 903-4	4	CS MX	3	WAIT	103-3, 203-3, 303-3, 703-3, 903-3
	2	GND	1	SY CLK	202-15, 302-15, 402-15, 103-1, 303-1, 403-1

AD-115

CN403

303-124, 403-124, 703-124	124	VIN2 CK	123	VIN2 OE	303-123, 403-123, 703-123
	122	GND	121	VIN2 VD	303-121, 403-121, 703-121
303-120, 403-120, 703-120	120	VIN2 HD	119	VIN2 C7	303-119, 403-119, 703-119
	118	GND	117	VIN2 C6	303-117, 403-117, 703-117
303-115, 403-116, 703-116	116	VIN2 C5	115	VIN2 C4	303-115, 403-116, 703-115
	114	GND	113	VIN2 C3	303-113, 403-113, 703-113
303-112, 403-112, 703-112	112	VIN2 C2	111	VIN2 C1	303-111, 403-111, 703-111
	110	GND	109	VIN2 C0	303-109, 403-109, 703-109
303-108, 403-108, 703-108	108	VIN2 Y7	107	VIN2 Y6	303-107, 403-107, 703-107
	106	GND	105	VIN2 Y5	303-105, 403-105, 703-105
303-104, 403-104, 703-104	104	VIN2 Y4	103	VIN2 Y3	303-103, 403-103, 703-103
	102	GND	101	VIN2 Y2	303-101, 403-101, 703-101
303-100, 403-100, 703-100	100	VIN2 Y1	99	VIN2 Y0	303-99, 403-99, 703-99
	98	GND	97	VIN1 Y7	303-97, 403-97, 703-97
303-96, 403-96, 703-96	96	VIN1 Y6	95	VIN1 Y5	303-95, 403-95, 703-95
	94	GND	93	VIN1 Y4	303-93, 403-93, 703-93
303-92, 403-92, 703-92	92	VIN1 Y3	91	VIN1 Y2	303-91, 403-91, 703-91
	90	GND	89	VIN1 Y1	303-89, 403-89, 703-89
303-88, 403-88, 703-88	88	VIN1 Y0	87	VIN1 C7	303-87, 403-87, 703-87
	86	GND	85	VIN1 C6	303-85, 403-85, 703-85
303-84, 403-84, 703-84	84	VIN1 C5	83	VIN1 C4	303-83, 403-83, 703-83
	82	GND	81	VIN1 C3	303-81, 403-81, 703-81
303-80, 403-80, 703-80	80	VIN1 C2	79	VIN1 C1	303-79, 403-79, 703-79
	78	GND	77	VIN1 C0	303-77, 403-77, 703-77
303-76, 403-76, 703-76	76	VIN1 CK	75	VIN1 OE	303-75, 403-75, 703-75
	74	GND	73	VIN1 VD	303-73, 403-73, 703-73
303-72, 403-72, 703-72	72	VIN1 HD	71		
	70	GND	69		
	68		67		
	66	GND	65		
	64		63		
	62	GND	61		
	60		59		
	58	GND	57		
	56		55		
	54	GND	53		
	52		51		
	50	GND	49		
	48		47		
	46	GND	45		
	44		43		
	42	GND	41		
	40		39		
	38	GND	37		
	36		35		
	34	GND	33		
503-32	32	MONI G-C (O)	31	MONI G-C (X)	503-31
	30	GND	29		
503-28	28	MONI G-Y (O)	27	MONI G-Y (X)	503-27
	26	GND	25		
503-24	24	MONI Y (O)	23	MONI Y (X)	503-23
	22	GND	21		
503-20	20	SYNC (O)	19	SYNC (X)	503-19
	18	GND	17		
503-16	16	MONI R-Y (O)	15	MONI R-Y (X)	503-15
	14	GND	13		
503-12	12	MONI B-Y (O)	11	MONI B-Y (X)	503-11
	10	GND	9		
	8		7		
	6	GND	5		
	4		3		
	2	GND	1		

MB-639 (5/6)
PART NO 1-661-120-12
MODEL ES-7
B-ES7-MB639-12

MOTHER BOARD (6/6)

DA-95

	CN803				
2-33	124	PGM CK3-	123	PGM CK3+	2-34
	122	GND	121	PGM VD3	2-36
2-35	120	PGM HD3	119	PGM CE3	2-40
	118	GND	117		
	116		115		
	114	GND	113		
	112		111		
	110	GND	109		
	108		107		
	106	GND	105		
	104		103		
	102	GND	101		
	100		99		
	98	GND	97		
	96		95		
	94	GND	93		
	92		91		
	90	GND	89		
	88		87		
	86	GND	85		
	84		83		
	82	GND	81		
	80		79		
	78	GND	77		
	76		75		
	74	GND	73		
	72		71	PGM C7	203-71, 303-71, 403-71, 703-71, 803-71
	70	GND	69	PGM C6	203-69, 303-69, 403-69, 703-69, 803-69
203-68, 303-68, 403-68, 703-68, 803-68	68	PGM C5	67	PGM C4	203-67, 303-67, 403-67, 703-67, 803-67
	66	GND	65	PGM C3	203-65, 303-65, 403-65, 703-65, 803-65
203-64, 303-64, 403-64, 703-64, 803-64	64	PGM C2	63	PGM C1	203-63, 303-63, 403-63, 703-63, 803-63
	62	GND	61	PGM C0	203-61, 303-61, 403-61, 703-61, 803-61
203-60, 303-60, 403-60, 703-60, 803-60	60	PGM Y7	59	PGM Y6	203-59, 303-59, 403-59, 703-59, 803-59
	58	GND	57	PGM Y5	203-57, 303-57, 403-57, 703-57, 803-57
203-56, 303-56, 403-56, 703-56, 803-56	56	PGM Y4	55	PGM Y3	203-55, 303-55, 403-55, 703-55, 803-55
	54	GND	53	PGM Y2	203-53, 303-53, 403-53, 703-53, 803-53
203-52, 303-52, 403-52, 703-52, 803-52	52	PGM Y1	51	PGM Y0	203-51, 303-51, 403-51, 703-51, 803-51
	50	GND	49	PGM CE2	103-49, 203-49, 303-49, 403-49
203-48, 303-48, 403-48	48	PGM VD2	47	PGM CK2-	203-47, 303-47, 403-47
	46	GND	45	PGM CK2+	203-45, 303-45, 403-45
203-44, 303-44, 403-44	44	PGM HD2	43	PGM CE1	703-49, 803-49, 903-49
	42	GND	41	PGM VD1	703-48, 803-48
703-47, 803-47, 903-47	40	PGM CK1-	39	PGM CK1+	703-45, 803-45, 903-45
	38	GND	37	PGM HD1	703-44, 803-44
103-45	36	FLD1	35	EXT LOCK	103-47
	34	GND	33		
503-33	32	MONI R-C (G)	31	MONI G-C (G)	603-31
	30	GND	29		
503-28	28	MONI R-Y (G)	27	MONI G-Y (G)	603-27
	26	GND	25		
503-24	24	MONI Y (G)	23	MONI Y (G)	603-23
	22	GND	21		
503-20	20	SYNC (G)	19	SYNC (G)	603-19
	18	GND	17		
503-16	16	MONI R-Y (B)	15	MONI R-Y (G)	603-15
	14	GND	13		
503-12	12	MONI B-Y (B)	11	MONI B-Y (G)	603-11
	10	GND	9	T SYNC	703-1
6-2	9	REF1 (G)	7	REF1 (G)	6-1
6-4	8	REF2 (G)	5	REF2 (G)	6-3
6-6	4	REF3 (G)	3	REF3 (G)	6-5
6-8	2	REF4 (G)	1	REF4 (G)	6-7

FM-43/FM-44/IF-547

	CN703				
303-124, 403-124, 503-124	124	VIN2 CK	123	VIN2 OE	303-123, 403-123, 503-123
	122	GND	121	VIN2 VD	303-121, 403-121, 503-121
303-120, 403-120, 503-120	120	VIN2 HD	119	VIN2 C7	303-119, 403-119, 503-119
	118	GND	117	VIN2 C6	303-117, 403-117, 503-117
303-116, 403-116, 503-116	116	VIN2 C5	115	VIN2 C4	303-115, 403-115, 503-115
	114	GND	113	VIN2 C3	303-113, 403-113, 503-113
303-112, 403-112, 503-112	112	VIN2 C2	111	VIN2 C1	303-111, 403-111, 503-111
	110	GND	109	VIN2 C0	303-109, 403-109, 503-109
303-108, 403-108, 503-108	108	VIN2 Y7	107	VIN2 Y6	303-107, 403-107, 503-107
	106	GND	105	VIN2 Y5	303-105, 403-105, 503-105
303-104, 403-104, 503-104	104	VIN2 Y4	103	VIN2 Y3	303-103, 403-103, 503-103
	102	GND	101	VIN2 Y2	303-101, 403-101, 503-101
303-100, 403-100, 503-100	100	VIN2 Y1	99	VIN2 Y0	303-99, 403-99, 503-99
	98	GND	97	VIN1 Y7	303-97, 403-97, 503-97
303-96, 403-96, 503-96	96	VIN1 Y6	95	VIN1 Y5	303-95, 403-95, 503-95
	94	GND	93	VIN1 Y4	303-93, 403-93, 503-93
303-92, 403-92, 503-92	92	VIN1 Y3	91	VIN1 Y2	303-91, 403-91, 503-91
	90	GND	89	VIN1 Y1	303-89, 403-89, 503-89
303-88, 403-88, 503-88	88	VIN1 Y0	87	VIN1 C7	303-87, 403-87, 503-87
	86	GND	85	VIN1 C6	303-85, 403-85, 503-85
303-84, 403-84, 503-84	84	VIN1 C5	83	VIN1 C4	303-83, 403-83, 503-83
	82	GND	81	VIN1 C3	303-81, 403-81, 503-81
303-80, 403-80, 503-80	80	VIN1 C2	79	VIN1 C1	303-79, 403-79, 503-79
	78	GND	77	VIN1 C0	303-77, 403-77, 503-77
303-76, 403-76, 503-76	76	VIN1 CK	75	VIN1 OE	303-75, 403-75, 503-75
	74	GND	73	VIN1 VD	303-73, 403-73, 503-73
303-72, 403-72, 503-72	72	VIN1 HD	71	PGM C7	203-71, 303-71, 403-71, 803-71, 903-71
	70	GND	69	PGM C6	203-69, 303-69, 403-69, 803-69, 903-69
203-68, 303-68, 403-68, 503-68, 803-68	[illegible]	PGM C5	67	PGM C4	203-67, 303-67, 403-67, 803-67, 903-67
	[illegible]	GND	65	PGM C3	203-65, 303-65, 403-65, 503-65, 803-65
203-64, 303-64, 403-64, 503-64, 803-64	64	PGM C2	63	PGM C1	203-63, 303-63, 403-63, 503-63, 803-63
	62	GND	61	PGM C0	203-61, 303-61, 403-61, 503-61, 803-61
203-60, 303-60, 403-60, 503-60, 803-60	60	PGM Y7	59	PGM Y6	203-59, 303-59, 403-59, 503-59, 803-59
	58	GND	57	PGM Y5	203-57, 303-57, 403-57, 503-57, 803-57
203-56, 303-56, 403-56, 503-56, 803-56	56	PGM Y4	55	PGM Y3	203-55, 303-55, 403-55, 503-55, 803-55
	54	GND	53	PGM Y2	203-53, 303-53, 403-53, 503-53, 803-53
203-52, 303-52, 403-52, 503-52, 803-52	52	PGM Y1	51	PGM Y0	203-51, 303-51, 403-51, 503-51, 803-51
	50	GND	49	PGM CE1	803-49, 903-49
803-47, 903-47	48	PGM VD1	47	PGM CK1-	803-47, 903-47
	46	GND	45	PGM CK1+	803-45, 903-45
803-37, 903-44	44	PGM HD1	43		
	42	GND	41	SY RST	103-41, 203-41, 303-41, 403-41, 903-41
103-40, 203-40, 303-40, 403-40, 903-40	40	SY A14	39	SY A13	103-39, 203-39, 303-39, 403-39, 903-39
	38	GND	37	SY A12	103-37, 203-37, 303-37, 403-37, 903-37
103-36, 203-36, 303-36, 403-36, 903-36	36	SY A11	35	SY A10	103-35, 203-35, 303-35, 403-35, 903-35
	34	GND	33	SY A9	103-33, 203-33, 303-33, 403-33, 903-33
103-32, 203-32, 303-32, 403-32, 903-32	32	SY [illegible]	31	SY A7	103-31, 203-31, 303-31, 403-31, 903-31
	30	GND	29	SY A6	103-29, 203-29, 303-29, 403-29, 903-29
103-28, 203-28, 303-28, 403-28, 903-28	[illegible]	SY A5	27	SY A4	103-27, 203-27, 303-27, 403-27, 903-27
	26	GND	25	SY A3	103-25, 203-25, 303-25, 403-25, 903-25
103-24, 203-24, 303-24, 403-24, 903-24	24	SY A2	23	SY A1	103-23, 203-23, 303-23, 403-23, 903-23
	22	GND	21	SY D7	103-21, 203-21, 303-21, 403-21, 903-21
103-20, 203-20, 303-20, 403-20, 903-20	20	SY D6	19	SY D5	103-19, 203-19, 303-19, 403-19, 903-19
	18	GND	17	SY D4	103-17, 203-17, 303-17, 403-17, 903-17
103-16, 203-16, 303-16, 403-16, 903-16	16	SY D3	15	SY D2	103-15, 203-15, 303-15, 403-15, 903-15
	14	GND	13	SY D1	103-13, 203-13, 303-13, 403-13, 903-13
103-12, 203-12, 303-12, 403-12, 903-12	12	SY D0	11	RD	103-11, 203-11, 303-11, 403-11, 903-11
	10	GND	9	LD WR	103-9, 203-9, 303-9, 403-9, 903-9
103-8, 203-8, 303-8, 403-8, 903-8	8	CS IO	7	CS [illegible]	103-7, 203-7, 303-7, 403-7, 903-7
	6	GND	5	CS SW	103-5, 203-5, 303-5, 403-5, 903-5
103-4, 203-4, 303-4, 403-4, 903-4	4	CS MX	3	WAIT	103-3, 203-3, 303-3, 403-3, 903-3
	2	GND	1	T SYNC	603-9

MY-74/MY-75

CN603

103-113	124	MY TEST	123		
	122	GND	121		
	120		119		
	118	GND	117		
	116		115		
	114	GND	113		
	112		111		
	110	GND	109		
	108		107		
	106	GND	105		
	104		103		
	102	GND	101		
	100		99		
	98	GND	97		
	96		95		
	94	GND	93		
	92		91		
	90	GND	89		
	88		87		
	86	GND	85		
	84		83		
	82	GND	81		
	80		79		
	78	GND	77		
	76		75		
	74	GND	73		
	72		71	PGM C7	203-71, 303-71, 403-71, 603-71, 703-71
	70	GND	69	PGM C6	203-69, 303-69, 403-69, 603-69, 703-69
203-68, 303-68, 403-68, 603-68, 703-68	68	PGM C5	67	PGM C4	203-67, 303-67, 403-67, 603-67, 703-67
	66	GND	65	PGM C3	203-65, 303-65, 403-65, 603-65, 703-65
203-64, 303-64, 403-64, 603-64, 703-64	64	PGM C2	63	PGM C1	203-63, 303-63, 403-63, 603-63, 703-63
	62	GND	61	PGM C0	203-61, 303-61, 403-61, 603-61, 703-61
203-60, 303-60, 403-60, 603-60, 703-60	60	PGM Y7	59	PGM Y6	203-59, 303-59, 403-59, 603-59, 703-59
	58	GND	57	PGM Y5	203-57, 303-57, 403-57, 603-57, 703-57
203-56, 303-56, 403-56, 603-56, 703-56	56	PGM Y4	55	PGM Y3	203-55, 303-55, 403-55, 603-55, 703-55
	54	GND	53	PGM Y2	203-53, 303-53, 403-53, 603-53, 703-53
203-52, 303-52, 403-52, 603-52, 703-52	52	PGM Y1	51	PGM Y0	203-51, 303-51, 403-51, 603-51, 703-51
	50	GND	49	PGM OE1	603-49, 703-49, 803-49
603-47, 703-47	48	PGM VD1	47	PGM CK1-	603-47, 703-47, 803-47
603-45, 703-45	46	GND	45	PGM CK1+	603-45, 703-45, 803-45
603-43, 703-43	44	PGM HD1	43		
	42	GND	41		
	40		39		
	38	GND	37		
	36		35		
	34	GND	33		
	32		31		
	30	GND	29		
	28		27		
	26	GND	25		
	24		23		
	22	GND	21		
	20		19		
	18	GND	17		
	16		15		
	14	GND	13		
	12		11		
	10	GND	9		
	8		7		
	6	GND	5		
	4		3		
	2	GND	1		

AU-217

CN603

	124		123		
	122	GND	121		
	120		119		
	118	GND	117		
	116		115		
	114	GND	113		
	112		111		
	110	GND	109		
	108		107		
	106	GND	105		
	104		103		
	102	GND	101		
	100		99		
	98	GND	97		
	96		95		
	94	GND	93		
	92		91		
	90	GND	89		
	88		87		
	86	GND	85		
	84		83		
	82	GND	81		
	80		79		
	78	GND	77		
	76		75		
	74	GND	73		
	72		71		
	70	GND	69		
	68		67		
	66	GND	65		
	64		63		
	62	GND	61		
	60		59		
	58	GND	57		
	56		55		
	54	GND	53		
	52		51		
	50	GND	49	PGM OE1	603-43, 703-49, 803-49
	48		47	PGM CK1-	603-46, 703-47, 803-47
	46	GND	45	PGM CK1+	603-39, 703-46, 803-45
	44		43	CF PLS	103-43, 203-43, 303-43, 403-43
	42	GND	41	SY RST	103-41, 203-41, 303-41, 403-41, 703-41
103-40, 203-40, 303-40, 403-40, 703-40	40	SY A14	39	SY A13	103-39, 203-39, 303-39, 403-39, 703-39
	38	GND	37	SY A12	103-37, 203-37, 303-37, 403-37, 703-37
103-36, 203-36, 303-36, 403-36, 703-36	36	SY A11	35	SY A10	103-35, 203-35, 303-35, 403-35, 703-35
	34	GND	33	SY A9	103-33, 203-33, 303-33, 403-33, 703-33
103-32, 203-32, 303-32, 403-32, 703-32	32	SY A8	31	SY A7	103-31, 203-31, 303-31, 403-31, 703-31
	30	GND	29	SY A6	103-29, 203-29, 303-29, 403-29, 703-29
103-28, 203-28, 303-28, 403-28, 703-28	28	SY A5	27	SY A4	103-27, 203-27, 303-27, 403-27, 703-27
	26	GND	25	SY A3	103-25, 203-25, 303-25, 403-25, 703-25
103-24, 203-24, 303-24, 403-24, 703-24	24	SY A2	23	SY A1	103-23, 203-23, 303-23, 403-23, 703-23
	22	GND	21	SY ■	103-21, 203-21, 303-21, 403-21, 703-21
103-20, 203-20, 303-20, 403-20, 703-20	20	SY D8	19	SY D8	103-19, 203-19, 303-19, 403-19, 703-19
	18	GND	17	SY D4	103-17, 203-17, 303-17, 403-17, 703-17
103-16, 203-16, 303-16, 403-16, 703-16	16	SY D3	15	SY D2	103-15, 203-15, 303-15, 403-15, 703-15
	14	GND	13	SY D1	103-13, 203-13, 303-13, 403-13, 703-13
103-12, 203-12, 303-12, 403-12, 703-12	12	SY D0	11	RD	103-11, 203-11, 303-11, 403-11, 703-11
	10	GND	9	LD WR	103-9, 203-9, 303-9, 403-9, 703-9
103-8, 203-8, 303-8, 403-8, 703-8	8	CS IO	7	CS BR	103-7, 203-7, 303-7, 403-7, 703-7
	6	GND	5	CS SW	103-5, 203-5, 303-5, 403-5, 703-5
103-4, 203-4, 303-4, 403-4, 703-4	4	CS MX	3	WAIT	103-3, 203-3, 303-3, 403-3, 703-3
	2	GND	1		

CN-1242

CN6

603-7	1	REF1 (X)
603-8	2	REF1 (X)
603-5	3	REF2 (X)
603-6	4	REF2 (X)
603-3	5	REF3 (X)
603-4	6	REF3 (Y)
603-1	7	REF4 (X)
603-2	8	REF4 (Y)

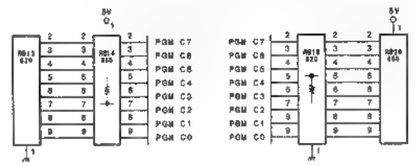

MB-639 (6/6)
PART NO 1-661-120-12
MODEL ES-7
B-ES7-MB639-12

MB-639 : MOTHE R BOARD

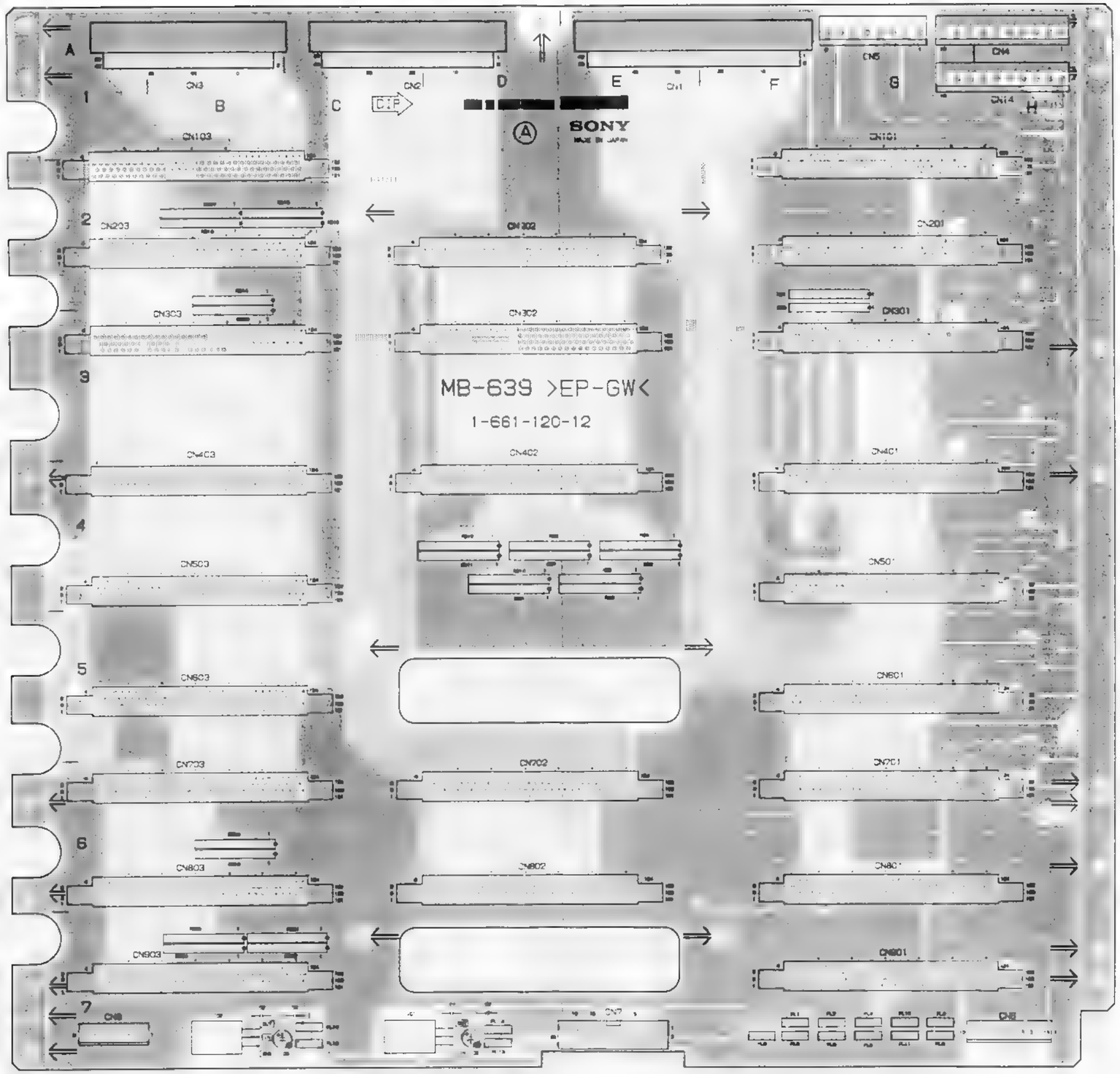

MB-639 (1-661-120-12)

▼ : B SIDE

CN1	F1
CN2	D1
CN3	B1
CN4	H1
CN5	G1
CN6	H7
CN7	E7
CN8	A7
CN14	H1
CN101	F2
CN103	A2
CN201	F2
CN202	D2
CN203	A2
CN301	F3
CN302	D3
CN303	A3
CN401	F4
CN402	D4
CN403	A4
CN501	F4
CN503	A4
CN601	F5
CN603	A5
CN701	F6
CN702	D6
CN703	A6
CN801	F6
CN802	D6
CN803	A6
CN901	F7
CN903	A7
FL1	F7
FL2	F7
FL3	F7
FL4	G7
FL5	G7
FL6	G7
FL7	G7
FL8	G7
FL9	G7
FL10	G7
FL11	G7
FL12	D7
FL13	D7
FL14	C7
FL15	C7
IC1	D7
IC2	B7
RB1	G2
RB2	G2
RB3	E4
RB4	E4
RB5	E4
RB6	E4
RB7	E4
RB8	E4
RB9	D4
RB10	D4
RB11	D4
RB12	D4
RB13	B3
RB14	B2
RB15	C2
RB16	C2
RB17	B2
RB18	B2
RB19	B6
RB20	B6
RB21	C7
RB22	C7
RB23	B7
RB24	B7

MB-639
PART NO 1-661-120-12
MODEL ES-7
-A SIDE-

MB-639 MB-639

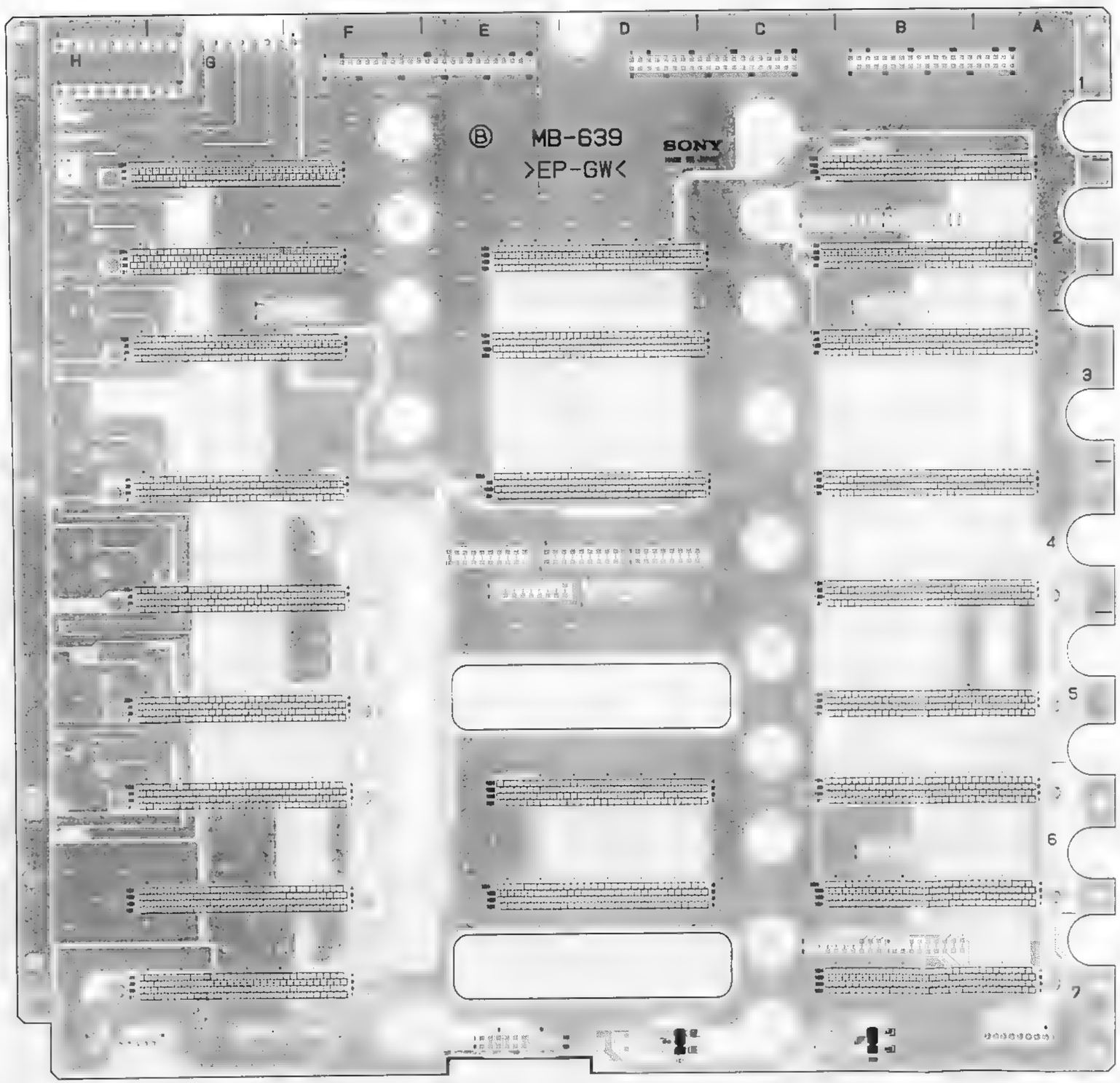

MB-639
PART NO 1-661-120-12
MODEL ES-7
-B SIDE-

6-23 6-23

FP-74, LE-154, CN-1238, CN-1242

FP-74 : FRONT P ANEL BOARD
LE-154 : LED BOARD
CN-1238 : AUDIO CONNECTOR BOARD
CN-1242 : CONNECTOR BOARD

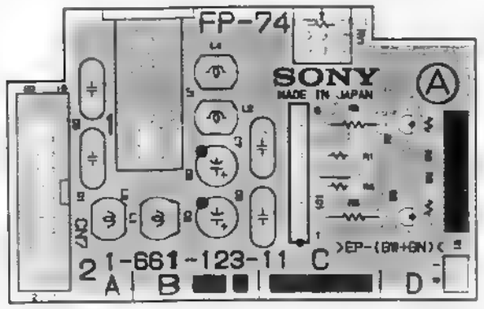

FP-74
PART NO 1-661-123-11
MODEL ES-7
-A SIDE-

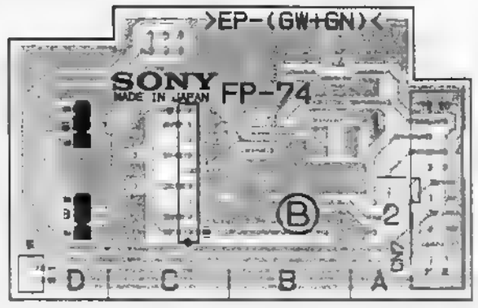

FP-74
PART NO 1-661-123-11
MODEL ES-7
-B SIDE-

FP-74 (1-661-123-11)

* : B SIDE

CN7	A2
IC1	C2
J1	A1
L1	B2
L2	B1
L3	A2
L4	B1
Q1	D1
Q2	D2
RV1	C1
W1	D2

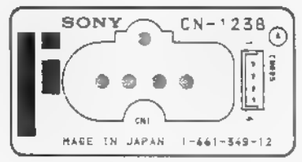

CN-1238
PART NO 1-661-349-12
MODEL ES-7
-A SIDE-

CN-1238
PART NO 1-661-349-12
MODEL ES-7
-B SIDE-

CN-1238 (1-661-349-12)

* : B SIDE

CN1	A1
CN805	A1

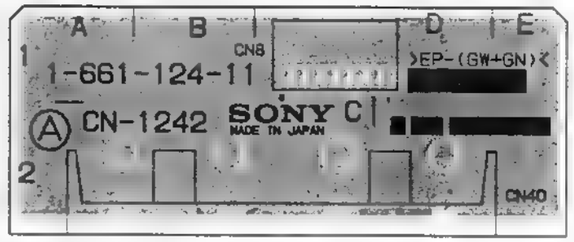

CN-1242
PART NO 1-661-124-11
MODEL ES-7
-A SIDE-

CN-1242 (1-661-124-11)

* B SIDE

CN8	D1
CN40	A2

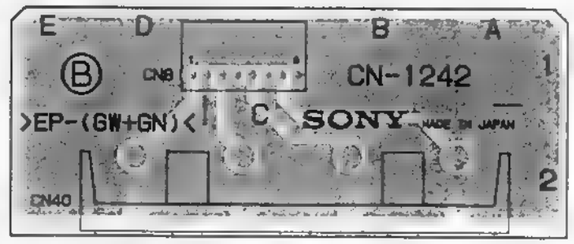

CN-1242
PART NO 1-661-124-11
MODEL ES-7
-A SIDE-

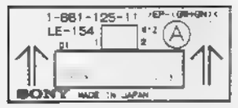

LE-154
PART NO 1-661-125-11
MODEL ES-7
-A SIDE-

LE-154
PART NO 1-661-125-11
MODEL ES-7
-B SIDE-

LE-154 (1-661-125-11)

* : B SIDE

D1	A1

6-24

CN-1237 : AUDIO CONNECTOR BOARD

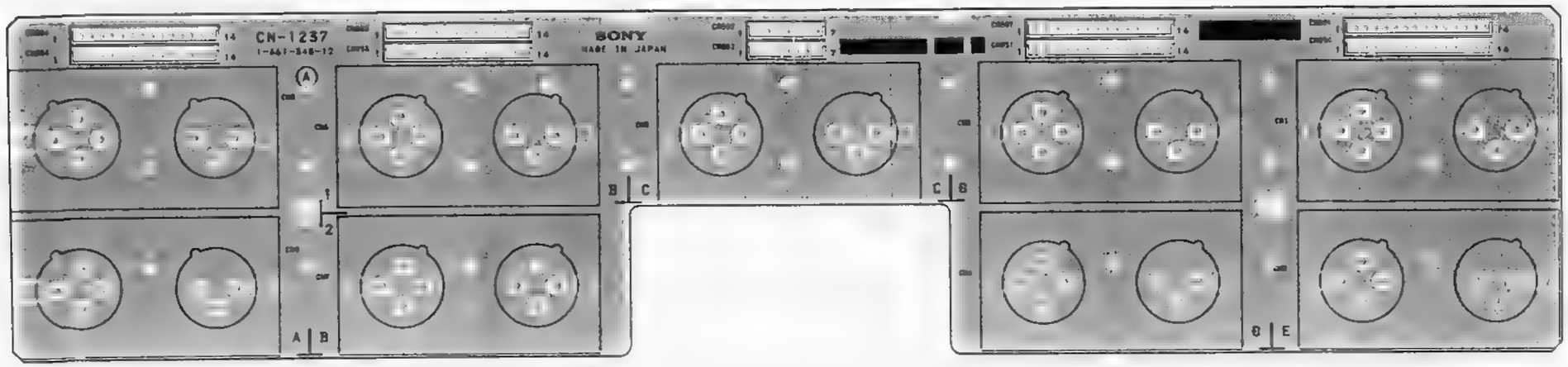

CN-1237
PART NO 1-661-348-12
MODEL ES-7
-A SIDE-

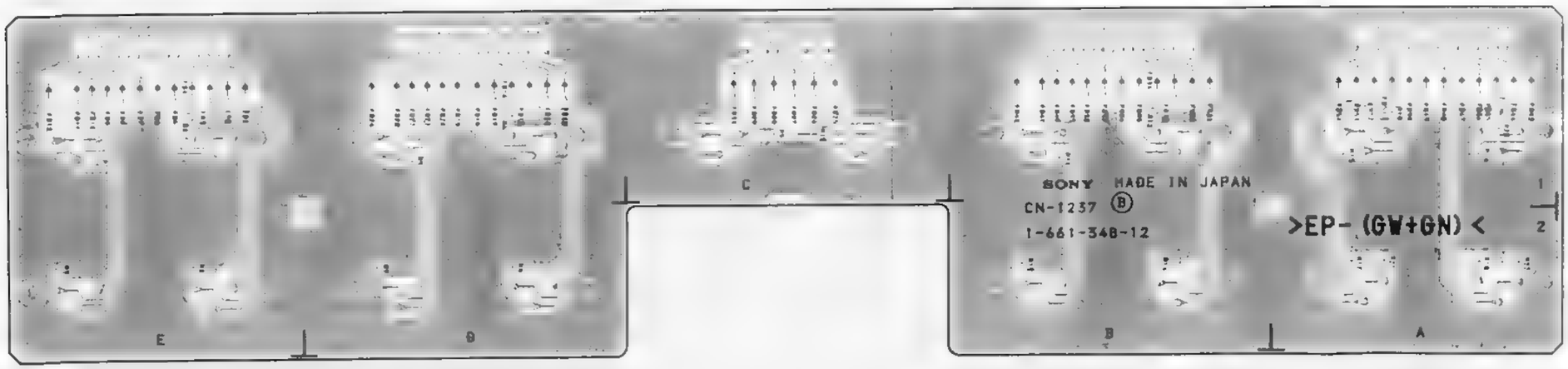

CN-1237
PART NO 1-661-348-12
MODEL ES-7
-B SIDE-

CN-1237 (1-661-348-12)

* : B SIDE

CN1	E1
CN2	E2
CN3	D1
CN4	D2
CN5	C1
CN6	B1
CN7	B2
CN8	A1
CN9	A2
CN800	E1
CN801	D1
CN802	C1
CN803	B1
CN804	A1
CN850	E1
CN851	D1
CN852	C1
CN853	B1
CN854	A1
* FB1	E1
* FB2	E1
* FB3	E1
* FB4	E1
* FB5	E1
* FB6	E1
* FB7	E1
* FB8	E1
* FB9	E1
* FB10	E1
* FB11	E1
* FB12	E1
* FB13	D1
* FB14	D1
* FB15	D1
* FB16	D1
* FB17	D1
* FB18	D1
* FB19	D1
* FB20	D1
* FB21	D1
* FB22	D1
* FB23	D1
* FB24	D1
* FB25	C1
* FB26	C1
* FB27	C1
* FB28	C1
* FB29	C1
* FB30	C1
* FB31	B1
* FB32	B1
* FB33	B1
* FB34	B1
* FB35	B1
* FB36	B1
* FB37	B1
* FB38	B1
* FB39	B1
* FB40	B1
* FB41	B1
* FB42	B1
* FB43	A1
* FB44	A1
* FB45	A1
* FB46	A1
* FB47	A1
* FB48	A1
* FB49	A1
* FB50	A1
* FB51	A1
* FB52	A1
* FB53	A1
* FB54	A1

SECTION 7
SPARE PARTS AND OPTIONAL FIXTURES

7-1. NOTES ON SPARE PARTS

(1) Safety Related ComponentsWarning

Components identified by shading marked with ⚠ on the schematic diagrams, exploded views and electrical spare parts list arecritical to safe operation. Replace these components with Sony parts whose parts numbers appear as shown in thismanual or in service manual supplements published by Sony.

(2) Standardization of Parts

Replace Parts that are supplied from Sony Parts Center can sometimes have different shape and external appearance than what are actually used in equipment. This is due to "accommodating the improved parts and/ or engineering changes" or "standardization of genuine parts."

(3) Stocked of Parts

The parts marked with "S" in the SP column of the exploded views and electrical spare parts list are normally required for routine service work. Orders for parts marked with "O" will be proceed, but allow for additional delivery time.

(4) Units of Capacitors, Inductors, and Resistors

The following units are omitted in the schematic diagrams exploded views, and electrical part lists unless otherwise specified;

Capacitor : μF
Inductor : μH
Resistor : W

7-1. 補修用部品注意事項

(1) 安全重要部品

回路図、分解図、電気部品表中、⚠印の部品は安全性を維持するために重要な部品です。従って、これらの部品を交換するには必ず指定の部品と交換して下さい。

(2) 部品の共通化

ソニーから供給される部品はセットに実装されているものと異なることがあります。これは部品の共通化、改良等によるものです。分解図や電気部品表中には現時点での共通化された部品が記載されています。

(3) 部品在庫

SP (Supply code) 欄が"O"で示されている部品は交換頻度が低い部品であるので在庫しないことがあり、納期が長くなることがあります。

(4) コンデンサ、インダクタ、抵抗の単位

回路図、分解図、電気部品表中、特に明記したものを除き、下記の単位は省略されています。

コンデンサ：μF
インダクタ：μH
抵抗　　：W

7-2. EXPLODED VIEWS

FRONT PANEL AND CD-ROM FLOPPY DISK

No.	Parts No.	SP	Description
1	A-8031-047-A	s	PANEL, FRONT
2	A-8273-932-A	o	MOUNTED CIRCUIT BOARD, FP-74
3	A-8311-902-A	s	HDD (1.0 GB)
4	X-3678-589-1	o	PANEL ASSY, FRONT
5	X-4852-903-0	s	LEG ASSY
6	X-4946-946-1	s	PANEL (3) ASSY,FRONT
7	1-241-577-11	s	RES, VAR
8	1-504-933-11	s	SPEAKER (4×2.8 cm)
9	1-565-327-11	s	JACK, LARGE TYPE 1P
10	⚠1-570-384-21	s	SWITCH, SEESAW (AC POWER)
11	1-661-125-11	o	PRINTED CIRCUIT BOARD, LE-154
12	2-269-962-00	o	COVER SWITCH
13	3-603-361-02	o	LID, UPPER
14	3-603-454-01	o	OUTER L
15	3-603-455-01	o	OUTER R
16	3-603-481-02	o	KNOB, HP VOL
17	3-688-814-31	s	CAP, SWITCH
18	4-313-702-91	s	HANDLE
19	4-612-633-01	s	SCREW, HD FITTING
20	4-628-474-41	s	BUTTON, EJECT
21	4-968-390-91	s	BUTTON, EJECT
22	4-976-566-41	s	PLATE, ORNAMENTAL (3), TRAY

FRONT PANEL AND CD-ROM FLOPPY DISK

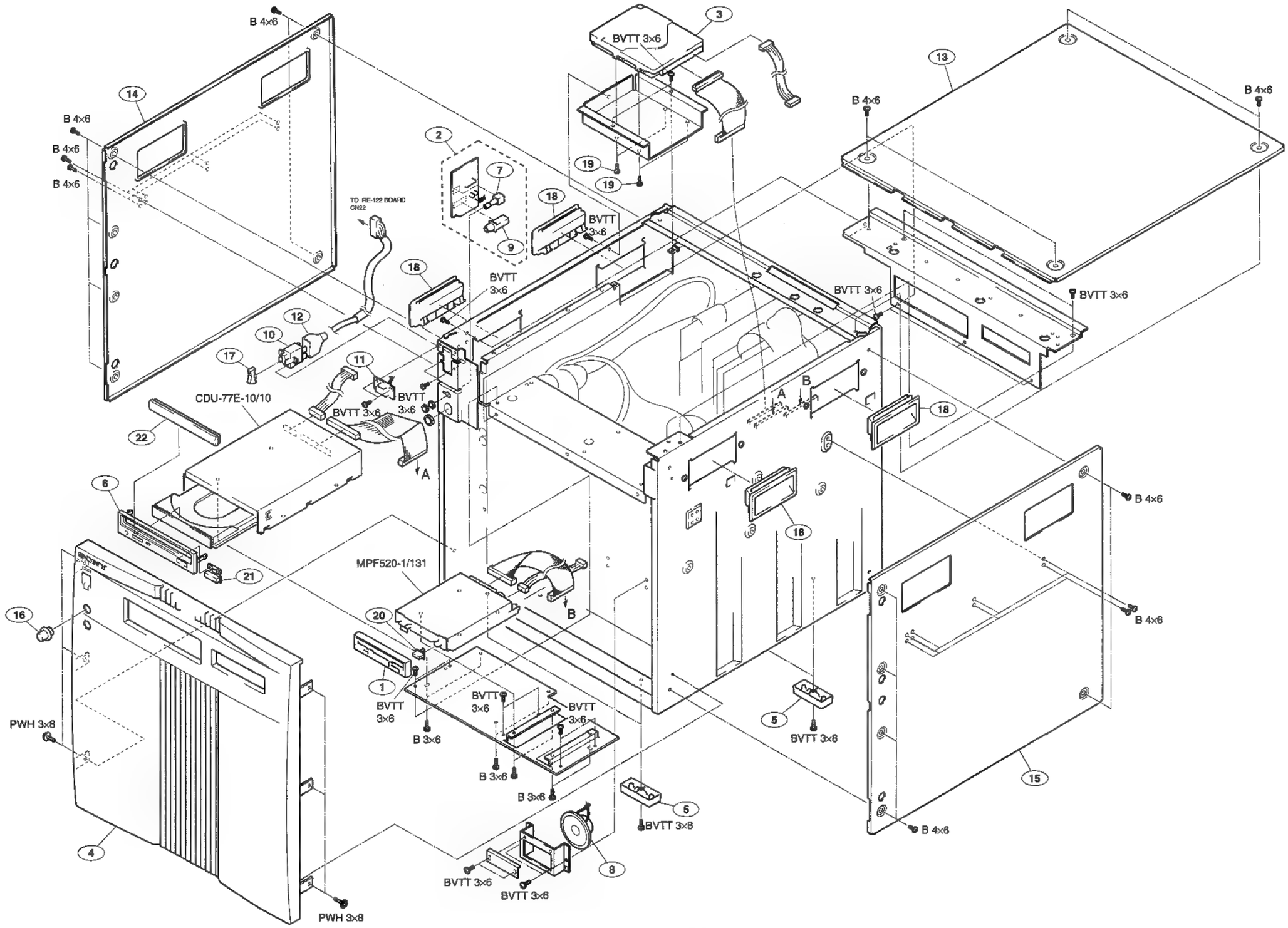
B 4×6
BVTT 3×6
TO RE-122 BOARD CN22
BVTT 3×6
CDU-77E-10/10
BVTT 3×6
BVTT 3×6
MPF520-1/131
PWH 3×8
BVTT 3×6
B 3×6
BVTT 3×6
BVTT 3×6
BVTT 3×6
BVTT 3×6
BVTT 3×6
BVTT 3×6
PWH 3×8
B 4×6
B 4×6
B 4×6

PC ASSY

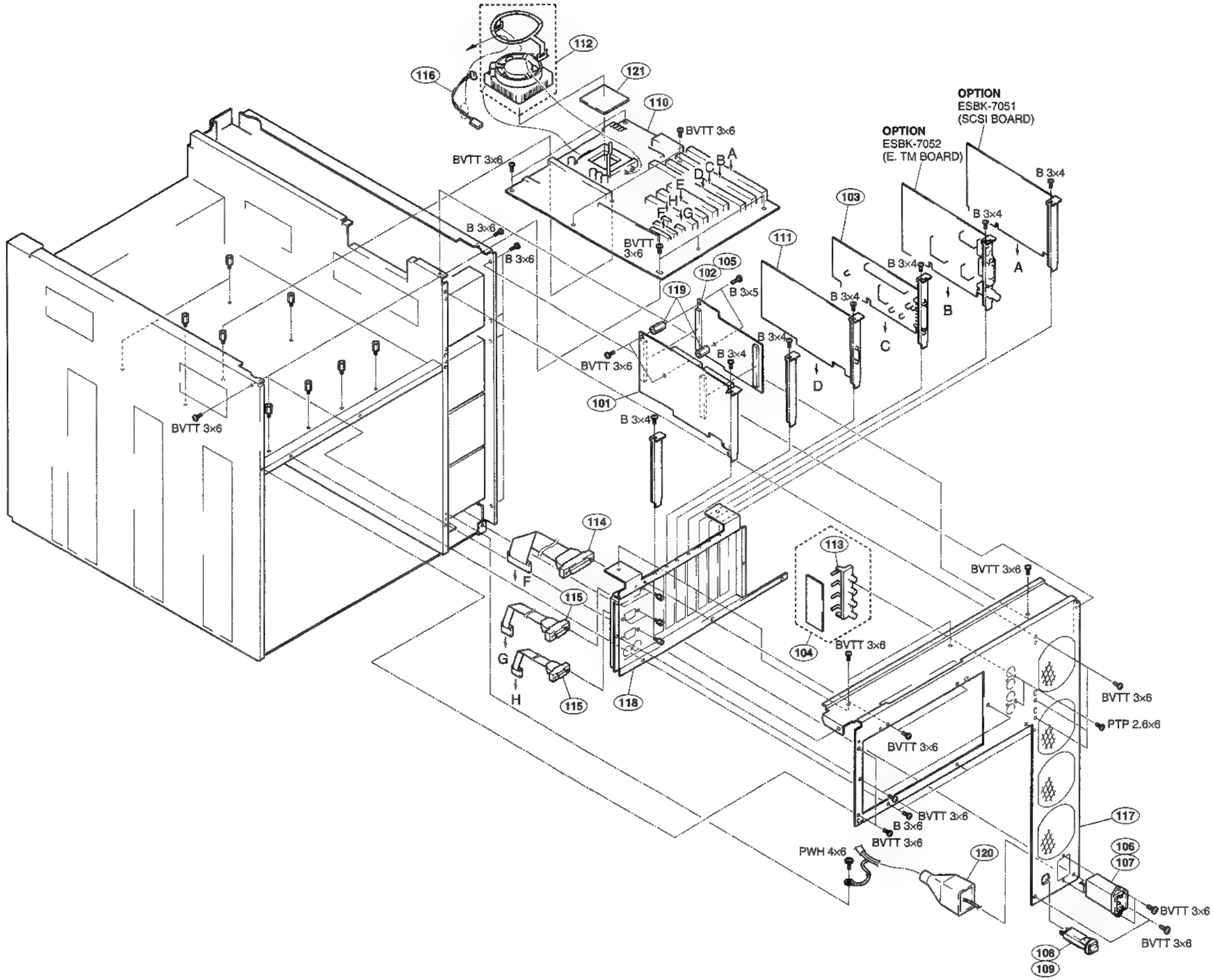
112
116
121
110
BVTT 3×6
BVTT 3×6
B 3×6
B 3×6
BVTT 3×6
OPTION
ESBK-7051
(SCSI BOARD)
OPTION
ESBK-7052
(E. TM BOARD)
B 3×4
103
111
105
102
B 3×5
119
B 3×4
B 3×4
B 3×4
B 3×4
BVTT 3×6
101
B 3×4
A
B
C
D
BVTT 3×6
114
F
115
G
H
115
118
113
104
BVTT 3×6
BVTT 3×6
BVTT 3×6
PTP 2.6×6
BVTT 3×6
B 3×6
BVTT 3×6
PWH 4×6
120
117
106
107
BVTT 3×6
BVTT 3×6
108
109

PC ASSY

No.	Parts No.	SP	Description
101	A-8273-914-A	■	MOUNTED CIRCUIT BOARD, VPR-18
102	A-8273-915-A	o	MOUNTED CIRCUIT BOARD, DSC-75 (For J,UC)
103	A-8273-916-A	o	MOUNTED CIRCUIT BOARD, BF-54
104	A-8273-937-A	o	MOUNTED CIRCUIT BOARD, CN-1242
105	A-8273-944-A	o	MOUNTED CIRCUIT BOARD, DSC-75A (For CE)
106	⚠1-251-506-11	s	INLET (WITH FILTER) (For J, UC)
107	⚠1-251-507-11	s	INLET (WITH FILTER) (For CE)
108	⚠1-533-570-11	s	BREAKER, CIRCUIT (For J, UC)
109	⚠1-533-630-11	s	BREAKER, CIRCUIT (For CE)
110	1-589-861-11	o	BOARD, PC, MAIN
111	1-589-888-11	o	BOARD,VGA
112	1-698-827-11	s	FAN, D. C. (WITH HEAT SINK)
113	1-774-966-11	o	CONNECTOR, BNC (RECEPTACLE)
114	1-777-296-11	o	CABLE (WITH CONNECTOR) (25P)
115	1-777-297-11	o	CABLE (WITH CONNECTOR) (9P)
116	1-956-406-11	o	HARNESS, SUB (FAN)
117	3-603-451-01	o	PANEL, REAR
118	3-603-463-01	o	PLATE (2), PC CN
119	3-718-661-01	o	SUPPORT, TC
120	4-601-466-11	s	COVER, 3P INLET
121	8-759-379-37	s	IC A80502-6100

POWER SUPPLY

No.	Parts No.	SP	Description
201	A-8273-931-A	o	MOUNTED CIRCUIT BOARD, MB-639
202	A-8273-938-A	o	MOUNTED CIRCUIT BOARD, RE-122 (For J, UC)
203	A-8311-628-A	o	MOUNTED CIRCUIT BOARD, RE-122A (For CE)
204	1-698-779-11	s	FAN, DC
205	1-956-148-11	o	HARNESS, SUB (VPR 1)
206	1-956-149-11	o	HARNESS, SUB (VPR 2)
207	1-956-150-11	o	HARNESS, SUB (BF)
208	1-956-151-11	o	HARNESS, SUB (FP)
209	3-178-164-01	o	RAIL (290), PC BOARD GUIDE

POWER SUPPLY

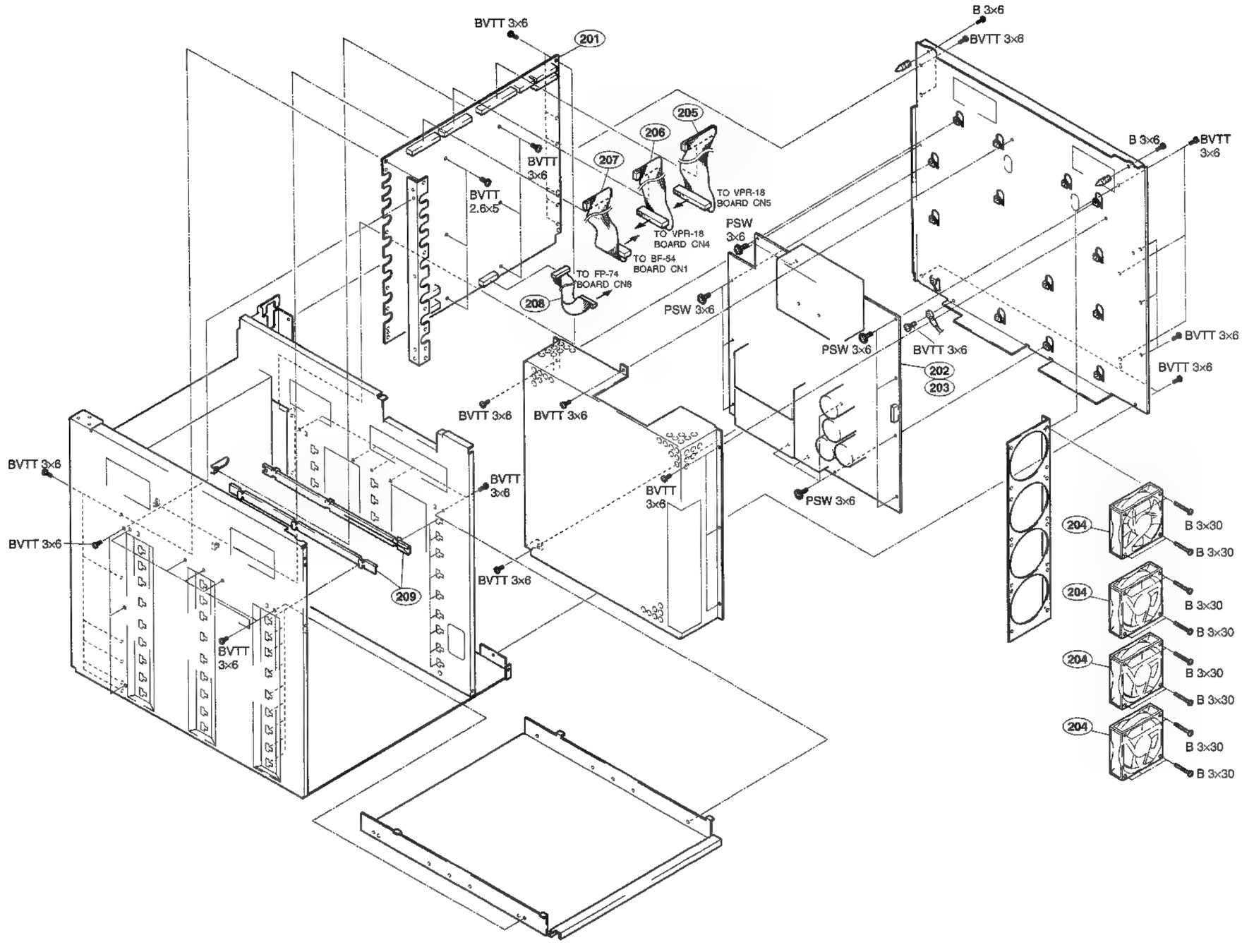

CARD BOARD (1/3)

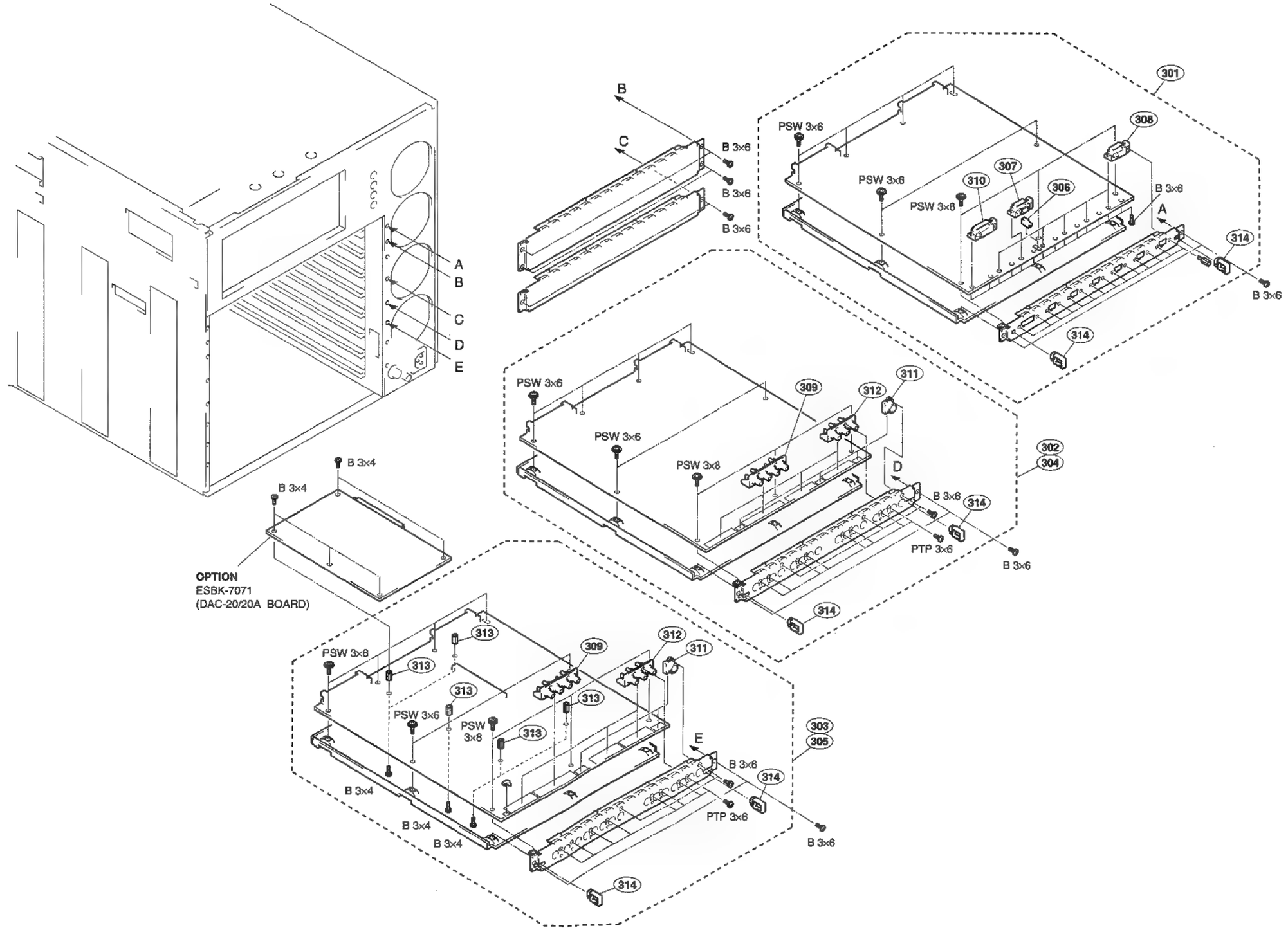

CARD BOARD (1/3)

No.	Parts No.	SP	Description
301	A-8273-909-A	o	MOUNTED CIRCUIT BOARD, SY-219
302	A-8273-935-A	o	MOUNTED CIRCUIT BOARD, AD-115 (For J, UC)
303	A-8273-936-A	o	MOUNTED CIRCUIT BOARD, DA-95 (For J, UC)
304	A-8273-952-A	o	MOUNTED CIRCUIT BOARD, AD-115A (For CE)
305	A-8273-953-A	o	MOUNTED CIRCUIT BOARD, DA-95A (For CE)
306	1-554-088-00	s	SWITCH, KEY BOARD
307	1-568-426-11	s	CONNECTOR, D-SUB 9P
308	1-573-566-11	s	CONNECTOR, D-SUB (ANGLE TYPE) 9P
309	1-744-966-11	o	CONNECTOR, BNC (RECEPTACLE)
310	1-750-889-11	s	CONNECTOR, D-SUB (ANGLE TYPE) 15P
311	1-766-239-11	o	CONNECTOR, S TERMINAL 4P
312	1-774-965-11	o	CONNECTOR, BNC (RECEPTACLE)
313	3-146-822-21	o	SPACER
314	3-172-089-01	o	HANDLE

CARD BOARD (2/3)

No.	Parts No.	SP	Description
401	A-8273-882-A	o	MOUNTED CIRCUIT BOARD, FM-44 (For J, UC)
402	A-8273-884-A	o	MOUNTED CIRCUIT BOARD, MY-75
403	A-8273-888-A	o	MOUNTED CIRCUIT BOARD, FM-44A (For CE)
404	A-8273-891-A	o	MOUNTED CIRCUIT BOARD, FM-43 (For J, UC)
405	A-8273-893-A	o	MOUNTED CIRCUIT BOARD, MY-74
406	A-8273-897-A	o	MOUNTED CIRCUIT BOARD, FM-43A (For CE)
407	A-8273-905-A	o	MOUNTED CIRCUIT BOARD, AU-217
408	A-8273-907-A	o	MOUNTED CIRCUIT BOARD, CN-1237 (For UC, CE)
409	A-8273-939-A	o	MOUNTED CIRCUIT BOARD, CN-1237 (For J)
410	1-861-349-11	o	PRINTED CIRCUIT BOARD, CN-1238
411	1-750-785-21	s	CONNECTOR (XLR TYPE) 3P
412	1-750-786-21	s	CONNECTOR (XLR TYPE) 3P
413	1-778-745-11	s	JACK, PIN 2P
414	1-956-152-11	o	HARNESS, SUB (AU-01)
415	1-956-153-11	o	HARNESS, SUB (AU-02)
416	1-956-154-11	o	HARNESS, SUB (AU-03)
417	2-280-622-01	o	SUPPORT (M3), HEXAGON 5.0 mm (For PU-84A)
418	3-172-089-01	o	HANDLE
419	3-603-484-01	o	HANDLE, PCB
420	3-718-661-01	o	SUPPORT, TC 9.0 mm (For EV-33)

CARD BOARD (2/3)

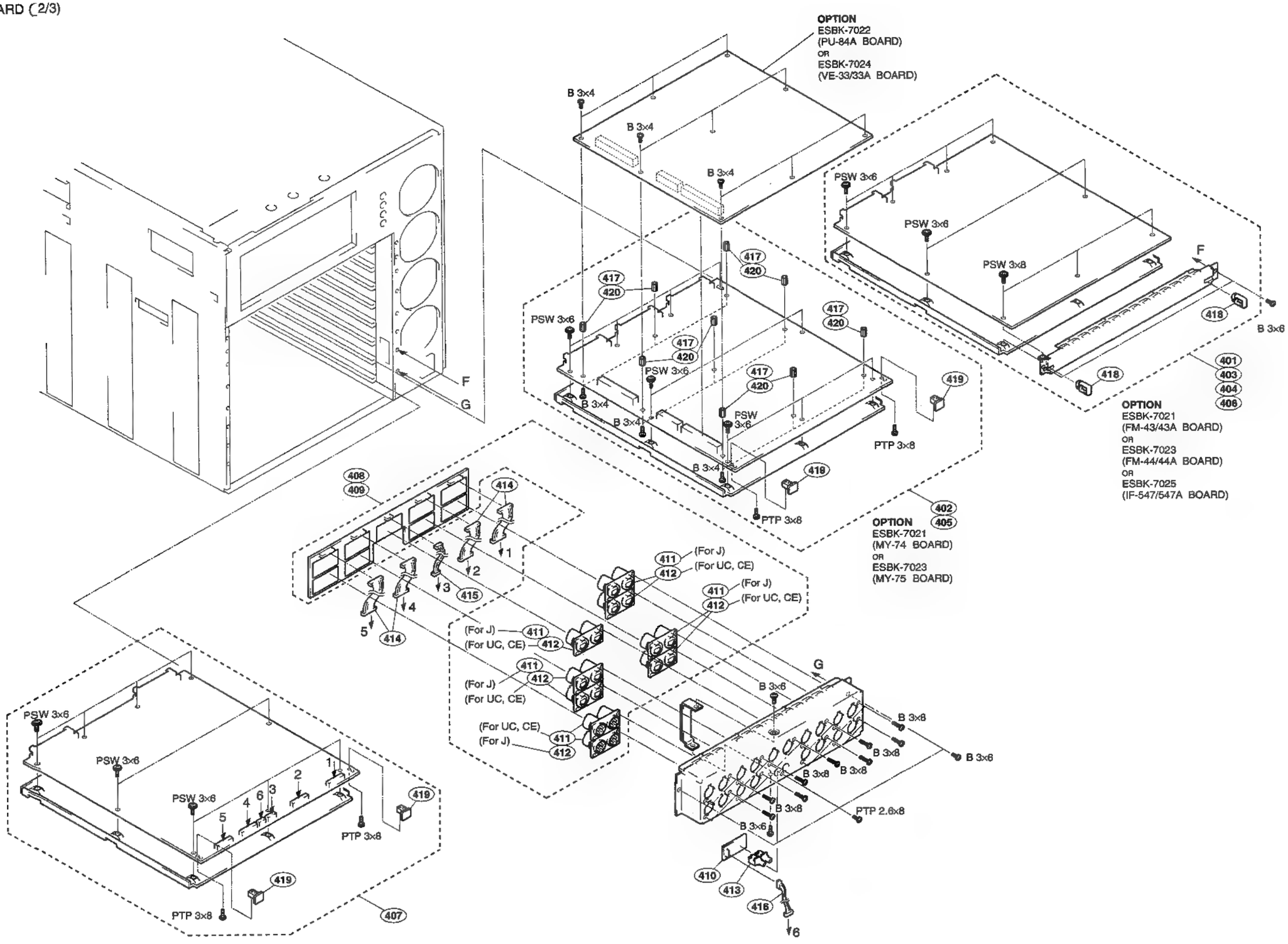

CARD BOARD (3/3)

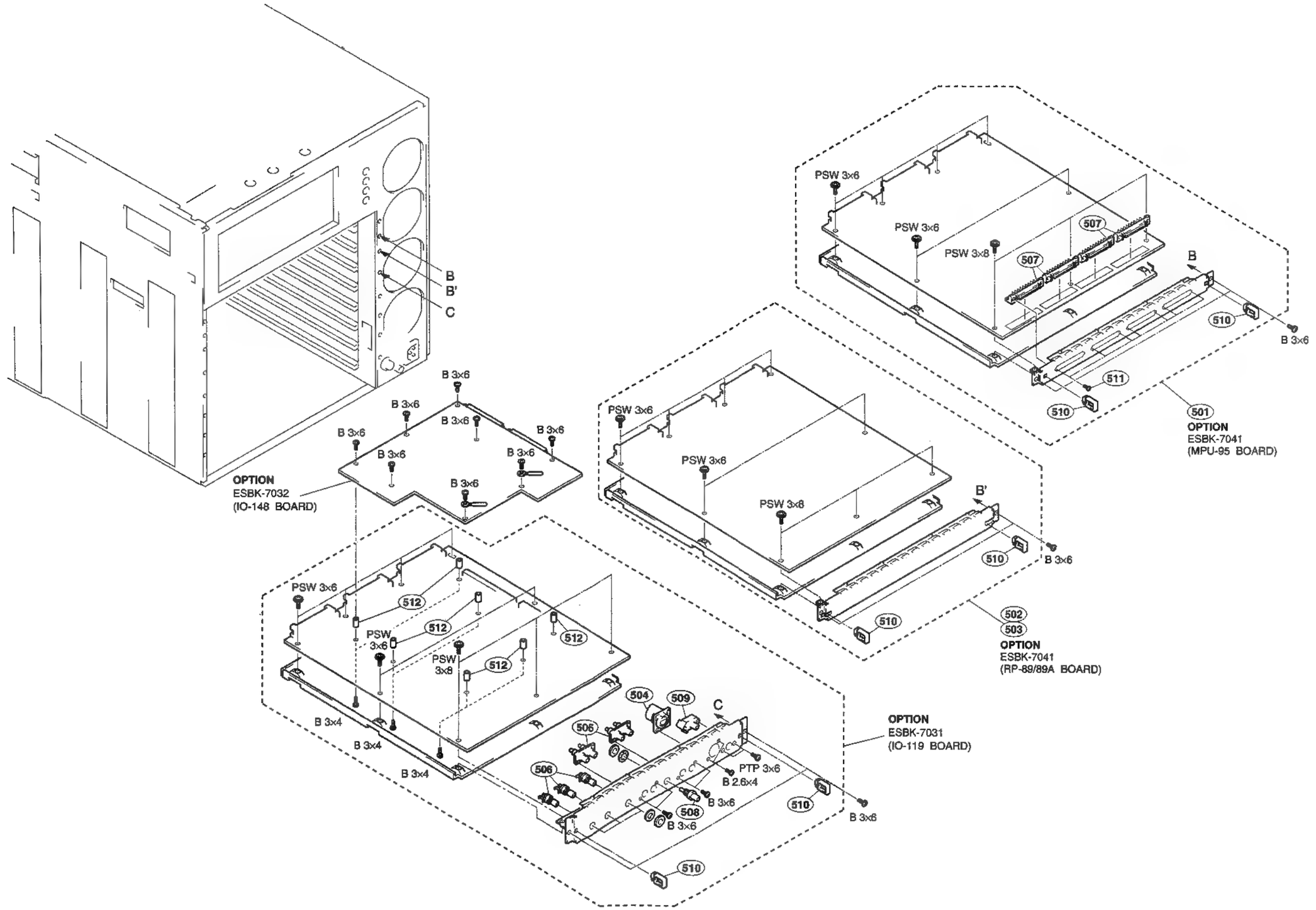

CARD BOARD (3/3)

No.	Parts No.	SP	Description
501	A-8311-015-A	o	MOUNTED CIRCUIT BOARD, MPU-95
502	A-8311-017-A	■	MOUNTED CIRCUIT BOARD, RP-89 (For J, UC)
503	A-8311-019-A	□	MOUNTED CIRCUIT BOARD, RP-89A (For CE)
504	1-568-006-11	s	CONNECTOR, XLR TYPE 3P
505	1-750-881-11	s	CONVERER, COAXIAL CONNECTOR
506	1-764-273-11	s	CONNECTOR, COAXIAL (BNC TYPE)
507	1-770-231-11	o	PIN, CONNECTOR (HALF PITCH) 50P
508	1-774-157-11	s	CONVERER, COAXIAL CONNECTOR
509	1-778-677-11	s	JACK, PIN (1P)
510	3-172-089-01	o	HANDLE
511	3-696-947-11	s	SCREW (B 2.5)
512	3-711-649-01	s	STUD

7-3. ELECTRICAL PARTS LIST

AD-115 BOARD(ES-7(UC/J))

Ref. No.
or Q'ty Part No. SP Description

1pc A-8273-935-A ■ MOUNTED CIRCUIT BOARD, AD-115
The mounted circuit board includes the following safety related parts.

PS800 ⚠ 1-532-675-21 ■ LINK, IC 1.5A

PS801 ⚠ 1-532-675-21 ■ LINK, IC 1.5A
PS802 ⚠ 1-532-675-21 s LINK, IC 1.5A
PS803 ⚠ 1-532-675-21 s LINK, IC 1.5A

AD-115A BOARD(ES-7(CE))

Ref. No.
or Q'ty Part No. SP Description

1pc A-8273-952-A o MOUNTED CIRCUIT BOARD, AD-115A
The mounted circuit board includes the following safety related parts.

PS800 ⚠ 1-532-675-21 ■ LINK, IC 1.5A

PS801 ⚠ 1-532-675-21 ■ LINK, IC 1.5A
PS802 ⚠ 1-532-675-21 s LINK, IC 1.5A
PS803 ⚠ 1-532-675-21 ■ LINK, IC 1.5A

AU-217 BOARD(ES-7(UC/J/CE))

Ref. No.
or Q'ty Part No. SP Description

1pc A-8273-905-A o MOUNTED CIRCUIT BOARD, AU-217
The mounted circuit board includes the following safety related parts.

F900 ⚠ 1-532-966-11 s FUSE, 5A 125V

BF-54 BOARD(ES-7(UC/J/CE))

Ref. No.
or Q'ty Part No. SP Description

1pc A-8273-916-A o MOUNTED CIRCUIT BOARD, BF-54

CN-1237 BOARD(ES-7(J))

Ref. No.
or Q'ty Part No. SP Description

1pc A-8273-939-A o MOUNTED CIRCUIT BOARD, CN-1237

CN1 1-750-785-11 s CONNECTOR, XLR 3P, MALE
CN2 1-750-785-11 s CONNECTOR, XLR 3P, MALE
CN3 1-750-785-11 s CONNECTOR, XLR 3P, MALE
CN4 1-750-785-11 ■ CONNECTOR, XLR 3P, MALE
CN5 1-750-785-11 s CONNECTOR, XLR 3P, MALE

CN6 1-750-785-11 s CONNECTOR, XLR 3P, MALE
CN7 1-750-785-11 s CONNECTOR, XLR 3P, MALE
CN8 1-750-786-11 ■ CONNECTOR, XLR 3P, FEMALE
CN9 1-750-786-11 ■ CONNECTOR, XLR 3P, FEMALE
CN800 1-506-479-11 o CONNECTOR 14P, MALE

CN801 1-506-479-11 o CONNECTOR 14P, MALE
CN803 1-506-479-11 o CONNECTOR 14P, MALE
CN804 1-506-479-11 o CONNECTOR 14P, MALE
CN852 1-506-472-11 s CONNECTOR 7P, MALE

FB1-54 1-500-202-11 s BEAD, FERRITE

CN-1237 BOARD(ES-7(UC/CE))

Ref. No.
or Q'ty Part No. SP Description

1pc A-8273-907-A o MOUNTED CIRCUIT BOARD, CN-1237

CN1 1-750-786-11 s CONNECTOR, XLR 3P, FEMALE
CN2 1-750-786-11 s CONNECTOR, XLR 3P, FEMALE
CN3 1-750-786-11 s CONNECTOR, XLR 3P, FEMALE
CN4 1-750-786-11 s CONNECTOR, XLR 3P, FEMALE
CN5 1-750-786-11 s CONNECTOR, XLR 3P, FEMALE

CN6 1-750-786-11 s CONNECTOR, XLR 3P, FEMALE
CN7 1-750-786-11 s CONNECTOR, XLR 3P, FEMALE
CN8 1-750-785-11 s CONNECTOR, XLR 3P, MALE
CN9 1-750-785-11 ■ CONNECTOR, XLR 3P, MALE
CN800 1-506-479-11 o CONNECTOR 14P, MALE

CN801 1-506-479-11 o CONNECTOR 14P, MALE
CN803 1-506-479-11 o CONNECTOR 14P, MALE
CN804 1-506-479-11 o CONNECTOR 14P, MALE
CN852 1-506-472-11 ■ CONNECTOR 7P, MALE

FB1-54 1-500-202-11 s BEAD, FERRITE

CN-1238 BOARD(ES-7(UC/J/CE))

Ref. No.
or Q'ty Part No. SP Description

1pc 1-661-349-11 o PRINTED CIRCUIT BOARD, CN-1238

CN1 1-778-745-11 s JACK, PIN 2P, FEMALE
CN805 1-506-469-11 s CONNECTOR 4P, MALE

FB1-4 1-500-202-11 s BEAD, FERRITE

CN-1242 BOARD(ES-7(UC/J/CE))

Ref. No. or Q'ty	Part No.	SP	Description
1pc	A-8273-937-A	o	MOUNTED CIRCUIT BOARD, CN-1242
CN8	1-560-369-00	o	CONNECTOR, ILG 8P, MALE
CN40	1-774-966-11	o	CONNECTOR, 4-BNC, FEMALE

DA-95 BOARD(ES-7(UC/J))

Ref. No. or Q'ty	Part No.	SP	Description
1pc	A-8273-936-A	■	MOUNTED CIRCUIT BOARD, DA-95

The mounted circuit board includes the following safety related parts.

PS900	⚠ 1-532-637-00	■	LINK, IC 1.0A
PS901	⚠ 1-532-637-00	s	LINK, IC 1.0A
PS902	⚠ 1-532-637-00	s	LINK, IC 1.0A
PS903	⚠ 1-532-637-00	s	LINK, IC 1.0A

DA-95A BOARD(ES-7(CE))

Ref. No. or Q'ty	Part No.	SP	Description
1pc	A-8273-953-A	o	MOUNTED CIRCUIT BOARD, DA-95A

The mounted circuit board includes the following safety related parts.

PS900	⚠ 1-532-637-00	s	LINK, IC 1.0A
PS901	⚠ 1-532-637-00	s	LINK, IC 1.0A
PS902	⚠ 1-532-637-00	s	LINK, IC 1.0A
PS903	⚠ 1-532-637-00	■	LINK, IC 1.0A

DAC-20/20A BOARD(ESBK-7025/7071(UC/J/CE))

Ref. No. or Q'ty	Part No.	SP	Description

The DAC-20/20A mounted circuit board is not supplied for repair part.

DSC-75 BOARD(ES-7(UC/J))

Ref. No. or Q'ty	Part No.	SP	Description
1pc	A-8273-915-A	o	MOUNTED CIRCUIT BOARD, DSC-75

DSC-75A BOARD(ES-7(CE))

Ref. No. or Q'ty	Part No.	SP	Description
1pc	A-8273-944-A	o	MOUNTED CIRCUIT BOARD, DSC-75A

FM-43 BOARD(ESBK-7021(UC/J))

Ref. No. or Q'ty	Part No.	SP	Description
1pc	A-8273-891-A	o	MOUNTED CIRCUIT BOARD, FM-43

The mounted circuit board includes the following safety related parts.

PS1	⚠ 1-532-686-21	s	LINK, IC 2.7A

FM-43A BOARD(ESBK-7021(CE))

Ref. No. or Q'ty	Part No.	SP	Description
1pc	A-8273-897-A	o	MOUNTED CIRCUIT BOARD, FM-43A

The mounted circuit board includes the following safety related parts.

PS1	⚠ 1-532-686-21	s	LINK, IC 2.7A

FM-44 BOARD(ESBK-7023(UC/J))

Ref. No. or Q'ty	Part No.	SP	Description
1pc	A-8273-882-A	o	MOUNTED CIRCUIT BOARD, FM-44

The mounted circuit board includes the following safety related parts.

PS1	⚠ 1-532-686-21	■	LINK, IC 2.7A

FM-44A BOARD(ESBK-7023(CE))

Ref. No. or Q'ty	Part No.	SP	Description
1pc	A-8273-888-A	o	MOUNTED CIRCUIT BOARD, FM-44A

The mounted circuit board includes the following safety related parts.

PS1	⚠ 1-532-686-21	s	LINK, IC 2.7A

FP-74 BOARD(ES-7(UC/J/CE))

Ref. No. or Q'ty	Part No.	SP	Description
1pc	A-8273-932-A	■	MOUNTED CIRCUIT BOARD, FP-74
C1	1-130-495-00	■	MYLAR 0.1uF 5% 50V
C2	1-104-665-11	s	ELECT 100uF 20% 25V
C3	1-130-495-00	■	MYLAR 0.1uF 5% 50V
C5	1-130-495-00	s	MYLAR 0.1uF 5% 50V
C6	1-104-665-11	s	ELECT 100uF 20% 25V
C7	1-130-495-00	■	MYLAR 0.1uF [illegible] 50V
CN7	1-506-501-11	o	CONNECTOR 20P, MALE
IC1	8-759-700-40	s	IC NJM4560S
J1	1-507-863-51	s	JACK, PHONE
L1	1-410-478-11	s	INDUCTOR 47uH
L2	1-410-478-11	s	INDUCTOR 47uH
L3	1-410-478-11	■	INDUCTOR 47uH
L4	1-410-478-11	s	INDUCTOR 47uH
Q1	8-729-119-78	s	TRANSISTOR 2SC2785-HFE
Q2	8-729-119-78	s	TRANSISTOR 2SC2785-HFE
R1	1-247-807-31	■	CARBON 100 5% 1/4W
R2	1-260-087-11	s	CARBON 100 5% 1/2W
R3	1-249-421-11	s	CARBON 2.2k 5% 1/4W
R4	1-247-807-31	■	CARBON 100 5% 1/4W
R5	1-260-087-11	s	CARBON 100 5% 1/2W
R6	1-249-421-11	■	CARBON 2.2k 5% 1/4W
RV1	1-241-577-11	■	RES, VAR, CARBON 20k/20k

IO-119 BOARD(ESBK-7031(UC/J/CE))

Ref. No. or Q'ty	Part No.	SP	Description

The IO-119 mounted circuit board is not supplied for repair part.
The mounted circuit board includes the following safety related parts.

F1101	⚠	1-576-031-11	s	FUSE 10A 125V
F1102	⚠	1-576-031-11	s	FUSE 10A 125V

IO-148 BOARD(ESBK-7032(UC/J/CE))

Ref. No. or Q'ty	Part No.	SP	Description

The IO-148 mounted circuit board is not supplied for repair part.

LE-154 BOARD(ES-7(UC/J/CE))

Ref. No. or Q'ty	Part No.	SP	Description
1pc	1-661-125-11	o	PRINTED CIRCUIT BOARD, LE-154
D1	8-719-979-87	s	LED LD-701MG, GRN

MB-639 BOARD(ES-7(UC/J/CE))

Ref. No. or Q'ty	Part No.	SP	Description
1pc	A-8273-931-A	■	MOUNTED CIRCUIT BOARD, MB-639
C1	1-164-159-21	s	CERAMIC 0.1uF 50V
C2	1-164-159-21	s	CERAMIC 0.1uF 50V
C3	1-164-159-21	s	CERAMIC 0.1uF 50V
C4	1-164-159-21	s	CERAMIC 0.1uF 50V
C5	1-126-966-11	s	ELECT 33uF 20% 50V
C6	1-126-966-11	s	ELECT 33uF 20% 50V
CN1	1-580-734-11	o	CONNECTOR, BB 50P, MALE
CN2	1-778-524-11	o	CONNECTOR, DIN 40P, MALE
CN3	1-778-524-11	o	CONNECTOR, DIN 40P, MALE
CN4	1-506-599-11	o	CONNECTOR, VH 10P, MALE
CN5	1-564-674-11	o	CONNECTOR 8P, MALE
CN6	1-560-362-00	■	CONNECTOR 10P, MALE
CN7	1-506-501-11	o	CONNECTOR 20P, MALE
CN8	1-506-706-11	o	CONNECTOR, ILG 8P, MALE
CN14	1-506-599-11	o	CONNECTOR, VH 10P, MALE
CN101	1-778-258-11	o	CONNECTOR, BB 124P, FEMALE
CN103	1-778-258-11	o	CONNECTOR, BB 124P, FEMALE
CN201	1-778-258-11	o	CONNECTOR, BB 124P, FEMALE
CN202	1-778-258-11	o	CONNECTOR, BB 124P, FEMALE
CN203	1-778-258-11	■	CONNECTOR, BB 124P, FEMALE
CN301	1-778-258-11	o	CONNECTOR, BB 124P, FEMALE
CN302	1-778-258-11	o	CONNECTOR, BB 124P, FEMALE
CN303	1-778-258-11	o	CONNECTOR, BB 124P, FEMALE
CN401	1-778-258-11	o	CONNECTOR, BB 124P, FEMALE
CN402	1-778-258-11	o	CONNECTOR, BB 124P, FEMALE
CN403	1-778-258-11	o	CONNECTOR, BB 124P, FEMALE
CN501	1-778-258-11	o	CONNECTOR, BB 124P, FEMALE
CN503	1-778-258-11	o	CONNECTOR, BB 124P, FEMALE
CN601	1-778-258-11	o	CONNECTOR, BB 124P, FEMALE
CN603	1-778-258-11	o	CONNECTOR, BB 124P, FEMALE
CN701	1-778-258-11	o	CONNECTOR, BB 124P, FEMALE
CN702	1-778-258-11	o	CONNECTOR, BB 124P, FEMALE
CN703	1-778-258-11	o	CONNECTOR, BB 124P, FEMALE
CN801	1-778-258-11	o	CONNECTOR, BB 124P, FEMALE
CN802	1-778-258-11	o	CONNECTOR, BB 124P, FEMALE
CN803	1-778-258-11	o	CONNECTOR, BB 124P, FEMALE
CN901	1-778-258-11	o	CONNECTOR, BB 124P, FEMALE
CN903	1-778-258-11	o	CONNECTOR, BB 124P, FEMALE
FL1-15	1-236-163-11	s	FILTER, NOISE
IC1	8-759-701-56	■	IC NJM78M05FA
IC2	8-759-701-65	s	IC NJM79M05FA
RB1	1-231-400-00	■	RESISTOR BLOCK, 390x8
RB2	1-231-399-00	■	RESISTOR BLOCK, 330x8
RB3	1-231-400-00	■	RESISTOR BLOCK, 390x8
RB4	1-231-399-00	s	RESISTOR BLOCK, 330x8
RB5	1-231-400-00	■	RESISTOR BLOCK, 390x8
RB6	1-231-399-00	s	RESISTOR BLOCK, 330x8
RB7	1-231-400-00	s	RESISTOR BLOCK, 390x8
RB8	1-231-399-00	s	RESISTOR BLOCK, 330x8
RB9	1-231-400-00	s	RESISTOR BLOCK, 390x8
RB10	1-231-399-00	s	RESISTOR BLOCK, 330x8
RB11	1-231-400-00	s	RESISTOR BLOCK, 390x8
RB12	1-231-399-00	s	RESISTOR BLOCK, 330x8
RB13	1-235-411-11	s	RESISTOR BLOCK, 820x8
RB14	1-235-541-11	s	RESISTOR BLOCK, 680x8

(MB-639 BOARD(ES-7(UC/J/CE)))

Ref. No. or Q'ty	Part No.	SP	Description
RB15	1-235-411-11	s	RESISTOR BLOCK, 820x8
RB16	1-235-541-11	s	RESISTOR BLOCK, 680x8
RB17	1-231-400-00	s	RESISTOR BLOCK, 390x8
RB18	1-231-399-00	s	RESISTOR BLOCK, 330x8
RB19	1-235-411-11	s	RESISTOR BLOCK, 820x8
RB20	1-235-541-11	s	RESISTOR BLOCK, 680x8
RB21	1-235-411-11	■	RESISTOR BLOCK, 820x8
RB22	1-235-541-11	■	RESISTOR BLOCK, 680x8
RB23	1-231-400-00	s	RESISTOR BLOCK, 390x8
RB24	1-231-399-00	s	RESISTOR BLOCK, 330x8

MPU-95 BOARD(ESBK-7041(UC/J/CE))

Ref. No. or Q'ty	Part No.	SP	Description
1pc	A-8311-015-A	o	MOUNTED CIRCUIT BOARD, MPU-95

The mounted circuit board includes the following safety related parts.

F1	⚠ 1-576-260-51	s	FUSE 10A 125V

MY-74 BOARD(ESBK-7021(UC/J/CE))

Ref. No. or Q'ty	Part No.	SP	Description
1pc	A-8273-893-A	o	MOUNTED CIRCUIT BOARD, MY-74

The mounted circuit board includes the following safety related parts.

PS1	⚠ 1-532-686-21	■	LINK, IC 2.7A

MY-75 BOARD(ESBK-7023(UC/J/CE))

Ref. No. or Q'ty	Part No.	SP	Description
1pc	A-8273-884-A	■	MOUNTED CIRCUIT BOARD, MY-75

The mounted circuit board includes the following safety related parts.

PS1	⚠ 1-532-686-21	s	LINK, IC 2.7A

PU-84A BOARD(ESBK-7022(UC/J/CE))

Ref. No.
or Q'ty Part No. SP Description

The PU-84A mounted circuit board is not supplied for repair part.

RE-122 BOARD(ES-7(UC/J))

Ref. No.
or Q'ty Part No. SP Description

1pc A-8273-938-A o MOUNTED CIRCUIT BOARD, RE-122
The mounted circuit board includes the following safety related parts.

F1 ⚠ 1-533-708-11 ∎ FUSE 3A 250V
F2 ⚠ 1-533-708-11 s FUSE 3A 250V
F3 ⚠ 1-576-260-51 ∎ FUSE 10A 125V
F4 ⚠ 1-532-966-11 s FUSE 5A 125V
F5 ⚠ 1-532-966-11 s FUSE 5A 125V

F6 ⚠ 1-532-966-11 ∎ FUSE 5A 125V
F11 ⚠ 1-533-708-11 ∎ FUSE 3A 250V
F100 ⚠ 1-532-496-00 s FUSE, THERMAL 109-DEG-C 10A 250V

RE-122A BOARD(ES-7(CE))

Ref. No.
or Q'ty Part No. SP Description

1pc A-8311-628-A o MOUNTED CIRCUIT BOARD, RE-122A
The mounted circuit board includes the following safety related parts.

F1 ⚠ 1-533-708-11 s FUSE 3A 250V
F2 ⚠ 1-533-708-11 s FUSE 3A 250V
F3 ⚠ 1-576-260-51 ∎ FUSE 10A 125V
F4 ⚠ 1-532-966-11 s FUSE 5A 125V
F5 ⚠ 1-532-966-11 s FUSE 5A 125V

F6 ⚠ 1-532-966-11 ∎ FUSE 5A 125V
F11 ⚠ 1-533-708-11 s FUSE 3A 250V
F100 ⚠ 1-532-496-00 s FUSE, THERMAL 109-DEG-C 10A 250V

RP-89 BOARD(ESBK-7041(UC/J))

Ref. No.
or Q'ty Part No. SP Description

1pc A-8311-017-A o MOUNTED CIRCUIT BOARD, RP-89
The mounted circuit board includes the following safety related parts.

F1 ⚠ 1-533-477-11 s FUSE, CHIP 8A 125V

RP-89A BOARD(ESBK-7041(CE))

Ref. No.
or Q'ty Part No. SP Description

1pc A-8311-019-A o MOUNTED CIRCUIT BOARD, RP-89A
The mounted circuit board includes the following safety related parts.

F1 ⚠ 1-533-477-11 s FUSE, CHIP 8A 125V

SY-219 BOARD(ES-7(UC/J/CE))

Ref. No.
or Q'ty Part No. SP Description

1pc A-8273-909-A o MOUNTED CIRCUIT BOARD, SY-219
The mounted circuit board includes the following safety related parts.

PS1 ⚠ 1-532-675-00 ∎ LINK, IC 1.5A

PS2 ⚠ 1-532-675-00 s LINK, IC 1.5A

VE-33/33A BOARD(ES-7(UC/J/CE))

Ref. No.
or Q'ty Part No. SP Description

The VE-33/33A mounted circuit board is not supplied for repair parts.
The mounted circuit board includes the following safety related parts.
PS1 ⚠ 1-533-282-21 s LINK, IC 2A

VPR-18 BOARD(ES-7(UC/J/CE))

Ref. No.
or Q'ty Part No. SP Description

1pc A-8273-914-A o MOUNTED CIRCUIT BOARD, VPR-18

FRAME(ES-7(UC/J/CE))

Ref. No. or Q'ty	Part No.	SP	Description
1pc	1-589-861-11	o	BOARD, PC MAIN(P/I-P55TP4XE)
1pc	1-589-888-11	■	BOARD, VGA
1pc	1-759-216-12	s	DRIVE, HARD DISK (3.5" 1GB)
2pcs	1-777-295-11	o	CABLE, FLAT 40P, 0.45m (CD-ROM drive to SECONDARY/PC Main board) (Hard disk drive to PRIMARY/PC Main board)
1pc	1-777-298-11	o	CABLE, FLAT 34P, 0.32m (Floppy disk drive to FLOPPY/PC Main board
1pc	1-777-296-11	o	CABLE, FLAT 25P, 0.2m (PRINTER connector/Rear panel to PRINTER/ PC Main board)
2pcs	1-777-297-11	o	CABLE, FLAT 9P, 0.15m (COM1 connector/Rear panel to COM1/PC Main board) (COM2 connector/Rear panel to COM2/PC Main board)

7-4. PACKING MATERIAL & SUPPLIED ACCESSORIES

ES-7(UC/J/CE)

Ref. No. or Q'ty	Part No.	SP	Description
1pc	⚠ 1-551-812-11	■	CORD, POWER 3P(for UC)
1pc	⚠ 1-557-161-11	s	CORD, POWER 2P(for J)
1pc	1-563-375-11	■	SHELL, D-SUB 9P
1pc	1-568-182-11	o	CONNECTOR, D-SUB 9P, MALE
1pc	⚠ 1-590-910-11	s	CORD, AC POWER 3P(for CE)
1pc	1-759-259-11	o	MOUSE
1pc	1-759-260-21	o	KEYBOARD ASSY (101)
1pc	1-777-294-11	s	CORD, CONNECTION
1pc	3-603-504-01	o	PACKAGE,OS (E)(for UC/CE)
1pc	2-603-505-01	o	PACKAGE,OS (J)(for J)
1pc	3-704-318-01	o	BAG, PROTECTION
1pc	3-856-429-01	s	MANUAL, INSTRUCTION (JAPANESE, FOR J)
1pc	⚠ 3-856-429-11	s	MANUAL, INSTRUCTION (ENGLISH, FOR UC/CE)
1pc	3-856-429-21	s	MANUAL, INSTRUCTION (FRENCH, FOR UC/CE)
1pc	3-856-429-31	■	MANUAL, INSTRUCTION (GERMAN, FOR CE)
1pc	1-759-311-11	o	CD-ROM

ESBK-7021(UC/J/CE)

Ref. No. or Q'ty	Part No.	SP	Description
1pc	3-856-431-01	s	MANUAL, INSTRUCTION

ESBK-7022(UC/J/CE)

Ref. No. or Q'ty	Part No.	SP	Description
1pc	3-704-046-31	s	BAG,PREVENTION,ELECTRIFICATION
1pc	3-856-431-01	s	MANUAL, INSTRUCTION
6pcs	7-682-545-04	s	SCREW +B 3x4

ESBK-7023(UC/J/CE)

Ref. No. or Q'ty	Part No.	SP	Description
1pc	3-856-431-01	s	MANUAL, INSTRUCTION

ESBK-7024(UC/J/CE)

Ref. No. or Q'ty	Part No.	SP	Description
1pc	3-856-431-01	s	MANUAL, INSTRUCTION
9pcs	7-682-545-04	s	SCREW +B 3x4

ESBK-7031(UC/J/CE)

Ref. No. or Q'ty	Part No.	SP	Description
1pc	3-856-431-01	■	MANUAL, INSTRUCTION

ESBK-7032(UC/J/CE)

Ref. No. or Q'ty	Part No.	SP	Description
5pcs	1-765-112-12	o	CABLE ASSY, COAXIAL
8pcs	7-682-547-04	■	SCREW +B 3x6

ESBK-7041(UC/J/CE)

Ref. No. or Q'ty	Part No.	SP	Description
1pc	3-856-431-01	s	MANUAL, INSTRUCTION

ESBK-7071(UC/J/CE)

Ref. No. or Q'ty	Part No.	SP	Description
1pc	1-759-312-11	o	CD-ROM
1pc	3-704-046-91	s	BAG, PREVENTION, ELECTRIFICATION
5pcs	7-682-947-01	s	SCREW +PSW 3x6

7-5. OPTIONAL FIXTURE

Part No.	SP	Description
J-6381-380-A	o	CABLE, VIDEO(S-BNC)
J-6441-950-A	■	EXTENSION BOARD, EX-488

SP0254

SONY

EDITSTATION

ES-7

BASIC DME
SWITCHER BOARD
ESBK-7021

3D EFFECT BOARD FOR
BASIC DME SWITCHER
ESBK-7022

ADVANCED DME
SWITCHER BOARD
ESBK-7023

3D EFFECT BOARD FOR
ADVANCED DME SWITCHER
ESBK-7024

EXTERNAL SWITCHER
INTERFACE BOARD
ESBK-7025

QSDI INTERFACE BOARD
ESBK-7031

SDI INTERFACE BOARD
ESBK-7032

DISK RECORDER BOARD
ESBK-7041

SCSI OPTION
ESBK-7051

ETHERNET OPTION
ESBK-7052

ESDRAW
ESBK-7071

SERVICE MANUAL

SUPPLEMENT-2

Please add and replace your manual with this SUPPLEMENT-1.

Applicable Manual

1st Edition (9-977-660-01)

Refer to next page for details.

ES-7 (UC, CE, 英)
9-977-660-82

Sony Corporation
Image & Sound Communication Company

Printed in Japan
1997. 7 11
© 1997
Published by
Engineering Services Dept.

SUBJECT

- TABLE OF CONTENTS
- SECTION 2 SERVICE INFORMATION
- SECTION 7 SPARE PARTS AND OPTIONAL FIXTURES

Replace the following pages.

SECTION 2. 2-35, 2-36

SECTION 7. 7-3 through 7-6, 7-19, 7-20

Add the following Pages.

SECTION 2. 2-46 and higher

LITHIUM BATTERY

CAUTION

Danger of explosion if battery is incorrectly replaced.

Replace only with the same or equivalent type recommended by the manufacturer.
Dispose of used batteries according to the manufacturer's instructions.

ADVARSEL

Lithiumbatteri - Eksplosjonsfare.
Ved utskifting benyttes kun batteri som anbefalt av apparatfabrikanten.
Brukt batteri returneres apparatleverandøren.

Vorsicht!

Explosionsgefahr bei unsachgemäßem Austausch der Batterie.

Ersatz nur durch denselben oder einen vom Hersteller empfohlenen ähnlichen Typ.
Entsorgung gebrauchter Batterien nach Angaben des Herstellers.

VARNING

Explosionsfara vid felaktigt batteribyte.
Använd samma batterityp eller en likvärdig typ som rekommenderas av apparattillverkaren.
Kassera använt batteri enligt gällande föreskrifter.

ATTENTION

Il y a danger d'explosion s'il y a remplacement incorrect de la batterie.

Remplacer uniquement avec une batterie du même type ou d'un type équivalent recommandé par le constructeur.
Mettre au rebut les batteries usagées conformément aux instructions du fabricant.

VAROITUS

Paristo voi räjähtää jos se on virheellisesti asennettu.
Vaihda paristo ainoastaan laitevalmistajan suosittelemaan tyyppiin.
Hävitä käytetty paristo valmistajan ohjeiden mukaisesti.

ADVARSEL!

Lithiumbatteri-Eksplosionsfare ved fejlagtig håndtering.
Udskiftning må kun ske med batteri af samme fabrikat og type.
Levér det brugte batteri tilbage til leverandøren.

LASER (for USA)

CAUTION

Use of Controls or adjustments or performance of procedures other than those specified herein may result in hazardous radiation exposure.

LASER (for EUROPE)

CLASS 1 LASER PRODUCT
LASER KLASSE 1
LUOKAN 1 LASERLAITE
KLASS 1 LASERAPPARAT

This ES-7 is classified as a CLASS 1 LASER PRODUCT.
The CLASS 1 LASER PRODUCT label is located on the rear panel.

TABLE OF CONTENTS

1. OPERATING INSTRUCTION

2. SERVICE INFORMATION

2-1. INSTALLATION 2-1
2-1-1. Installation 2-1
2-1-2. RACK-MOUNTING 2-1
2-2. CONNECTING SYSTEM COMPONENTS 2-3
2-2-1. Connecting VCRs 2-3
2-2-2. Connecting ESBK-7045 Disk Units 2-6
2-2-3. Connecting Computer Peripherals 2-7
2-2-4. Connecting Video/Audio Monitors and Audio Equipment 2-8
2-2-5. Connecting an External DME Switcher 2-9
2-3. Connector 2-11
2-3-1. Connectors 2-11
2-3-2. Connector Input/Output Signal 2-13
2-4. SWITCHES/JUMPERS/LEDS 2-20
2-4-1. ES-7 2-20
2-4-2. ESBK-7021 2-23
2-4-3. ESBK-7031 2-23
2-4-4. ESBK-7032 2-24
2-4-5. ESBK-7045 2-25
2-5. Location of Main Parts 2-26
2-5-1. Location of Main Parts 2-26
2-5-2. Board Layouts 2-27
2-6. CABINET REMOVAL 2-29
2-7. PARTS REPLACEMENT 2-30
2-7-1. Floppy Disk Drive/CD ROM Drive Replacement 2-30
2-7-2. Hard Disk Drive Replacement 2-31
2-7-3. Power Block (RE-122 Board) Replacement 2-32
2-7-4. Fuse Replacement 2-33
2-7-5. DC Fan Replacement 2-33
2-7-6. AU-217 Board Replacement 2-33
2-7-7. MB-639 Board Replacement 2-34
2-7-8. PC Main Board Replacement/Adjustment .. 2-35
2-7-9. Flash Memory Replacement 2-42
2-7-10. Lithium Battery Replacement 2-42
2-8. Notes on Spare Parts 2-43
2-8-1. Notes on Spare Parts 2-43
2-8-2. Replacement of Chip Parts 2-43
2-8-3. Removal of PLCC IC 2-44
2-8-4. Power Supplied Cord for CE 2-45
2-9. ERROR MESSAGES 2-46
2-9-1. Messages Displayed With The ● Icon 2-46
2-9-2. Messages Displayed With The ! Icon 2-48
2-9-3. Messages Displayed With The i Icon 2-50

3. DIAGNOSIS FUNCTION

3-1. OVERVIEW 3-1
3-2. FUNCTION 3-1
3-3. DIAGNOSIS PROCEDURES 3-1
3-3-1. Start-up/End of Diagnosis Program (SelfDiag) 3-1
3-3-2. Diagnosis on the Block Basis 3-4
3-3-3. Self-Diagnosis Result Display for SelfDiag Boards 3-25

4. ELECTRICAL ALIGNMENT

4-1. ADJUSTMENT SEQUENCE 4-1
4-2. ADJUSTMENT PREPARATIONS 4-3
4-2-1. Connection 4-3
4-2-2. Tools/Measuring Equipments 4-5
4-2-3. Built-in Color Bars 4-5
4-2-4. Layout of Adjustment Controls 4-8
4-3. DA-95 BOARD ADJUSTMENT 4-10
4-3-1. GEN LOCK Adjustment 4-10
4-3-2. COMPONENT RGB MATRIX LEVEL BALANCE Adjustment 4-12-1
4-3-3. PROGRAM OUTPUT G GAIN Adjustment 4-13
4-3-4. PROGRAM OUTPUT R GAIN Adjustment 4-13
4-3-5. PROGRAM OUTPUT B GAIN Adjustment 4-14
4-3-6. PROGRAM OUTPUT COMPONENT Y GAIN Adjustment 4-15
4-3-7. PROGRAM OUTPUT COMPONENT R-Y GAIN Adjustment 4-16
4-3-8. PROGRAM OUTPUT COMPONENT B-Y GAIN Adjustment 4-17
4-3-9. Y/R-Y DELAY Adjustment 4-18
4-3-10. Y/B-Y DELAY Adjustment 4-18
4-3-11. COMPOSITE SC LEAK BALANCE Adjustment 4-19
4-3-12. COMPOSITE CHROMA GAIN Adjustment 4-20
4-3-13. COMPOSITE Y GAIN Check 4-22
4-3-14. COMPOSITE BURST GAIN Adjustment 4-23
4-3-15. INT SC-H Adjustment (B II OUT) 4-24-1
4-3-16. INT SC PHASE Adjustment 4-26
4-3-17. EXT SC PHASE Adjustment 4-28
4-3-18. INT SC FREQUENCY Adjustment 4-29
4-3-19. S-VIDEO COMPONENT Y GAIN Check 4-31

4-3-20. S-VIDEO CHROMA GAIN Adjustment ... 4-33
4-3-21. EXT SC-H Adjustment (B B OUT) 4-35
4-3-22. ▮▮ OUTPUT GAIN Adjustment 4-37
4-3-23. SYNC OUT LEVEL Adjustment 4-38-1
4-4. DAC-20 BOARD ADJUSTMENT 4-39
4-4-1. COMPONENT RGB MATRIX LEVEL BALANCE Adjustment 4-39
4-4-2. MONITOR OUTPUT G GAIN Adjustment 4-40
4-4-3. MONITOR OUTPUT R GAIN Adjustment 4-40
4-4-4. MONITOR OUTPUT B GAIN Adjustment 4-41
4-4-5. MONITOR OUTPUT COMPONENT Y GAIN Adjustment 4-42
4-4-6. MONITOR OUTPUT COMPONENT R-Y GAIN Adjustment 4-43
4-4-7. MONITOR OUTPUT COMPONENT B-Y GAIN Adjustment 4-44
4-4-8. Y/R-Y DELAY Adjustment 4-45
4-4-9. Y/B-Y DELAY Adjustment 4-45
4-5. AD-115 BOARD ADJUSTMENT 4-46
4-5-1. COMPONENT Y LEVEL Adjustment 4-46
4-5-2. COMPONENT CHROMA LEVEL Adjustment 4-48
4-5-3. W HD PHASE Adjustment 4-50
4-5-4. COMPONENT Y/C DELAY Adjustment 4-52
4-5-5. AUX COMPONENT Y LEVEL Adjustment 4-53
4-5-6. AUX COMPONENT CHROMA LEVEL Adjustment 4-55
4-5-7. Y/C Input Y LEVEL Adjustment 4-57
4-5-8. CHROMA DECODER CLOCK FREQUENCY Adjustment 4-59
4-5-9. Y/C CHROMA LEVEL Adjustment 4-61
4-5-10. APC LOCK Adjustment 4-63
4-5-11. COMPOSITE Y LEVEL Adjustment 4-65
4-6. AU-217 BOARD ADJUSTMENT 4-67
4-6-1. PLAYER/AUX INPUT LEVEL Adjustment 4-67
4-6-2. RECORDER INPUT LEVEL Adjustment 4-68
4-6-3. LINE OUT LEVEL Adjustment 4-69

5. BLOCK DIAGRAMS

5-1. OVERALL 5-1
5-2. Operations/Functions of Circuit Boards 5-3
5-2-1. ANALOG VIDEO Input/Output 5-3
5-2-2. AUDIO 5-3
5-2-3. SYSTEM CONTROL 5-3
5-2-4. GRAPHICS BOARD 5-4
5-2-5. CPU BLOCK 5-4
5-2-6. POWER SUPPLY 5-4
5-2-7. MISCELLANEOUS 5-4
5-2-8. DME SW'ER OPTION 5-5
5-2-9. NON-LINEAR OPTION 5-6
5-2-10. DIGITAL I/O OPTION 5-6
5-2-11. ES DRAW 5-6

6. FRAME WIRING & BOARD LAYOUTS

FRAME WIRING
CN-1237 6-2
CN-1238 6-2
CN-1242 6-2
FP-74 6-2
LE-154 6-2
MB-639 6-10
BOARD LAYOUTS
CN-1237 6-25
CN-1238 6-24
CN-1242 6-24
FP-74 6-24
LE-154 6-24
MB-639 6-22

7. SPARE PARTS AND OPTIONAL FIXTURES

7-1. NOTES ON SPARE PARTS 7-1
7-2. EXPLODED VIEWS 7-2
7-3. ELECTRICAL PARTS LIST 7-14

2-7-8. PC Main Board Replacement/ Adjustment

Serial No : up to 10999 (For UC)
up to 30999 (For CE)

See this section.

Serial No : 11001 and higher (For UC)
31001 and higher (For CE)

See the ES-7 Kit-1 manual.
(Part number : 9-955-130- 01)

[How to replace]

Note: In the event of failure on the PC main board, be sure to replace the board on which the parts are mounted.

① Remove the top panel. (Refer to section 2-6.)
② Disconnect the nine connectors on the PC main board.

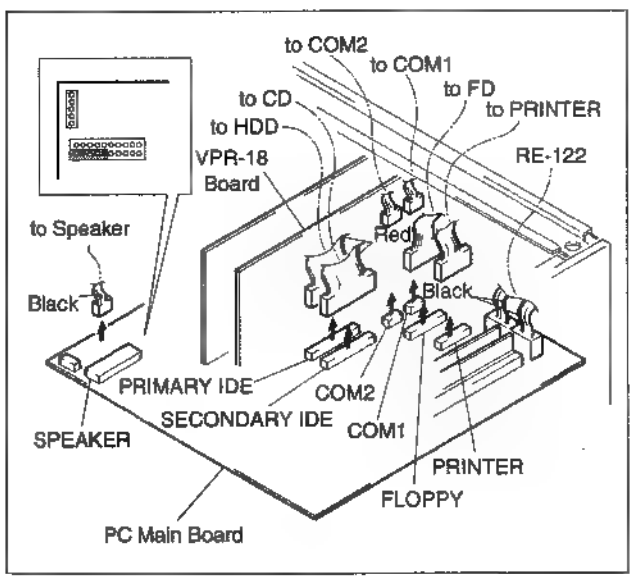

③ Remove the screw (B 3 × 4) from the bracket, and then remove the VPR-18 board. Remove the VGA board and BF-54 board, ESBK-7051 or ESBK-7052 (these ESBK are the optional boards.) from the PC main board.

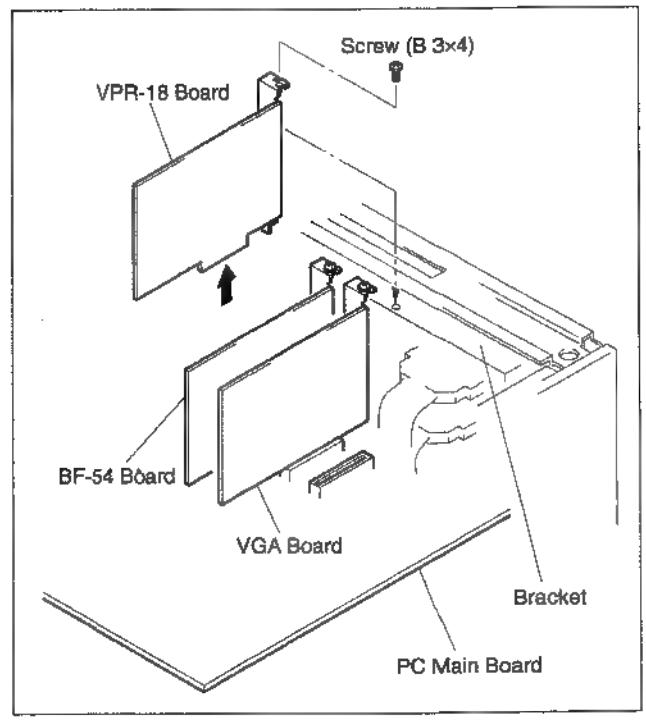

④ Remove the nine screws (BVTT 3 × 6), and then remove the PC main board.

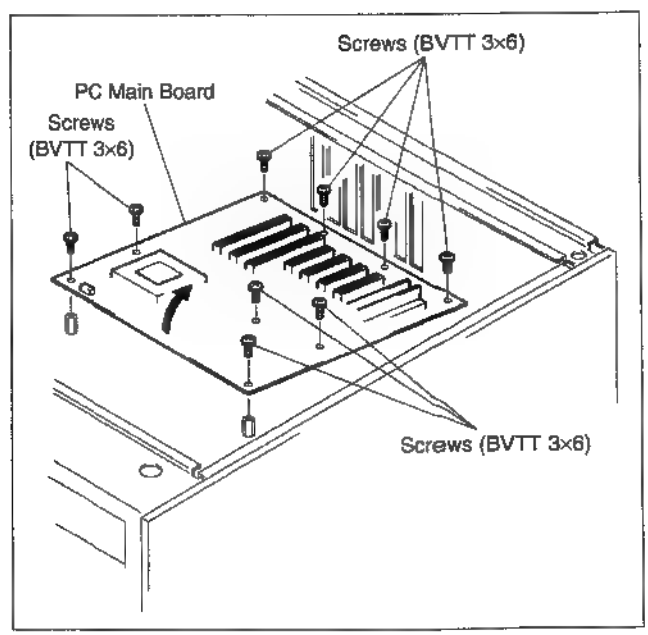

[JUMPER]

Confirm that jumpers are set to the following position.

① 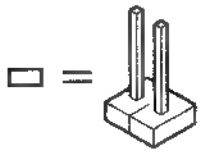

② 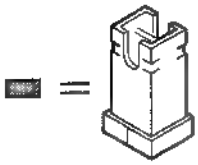

③ 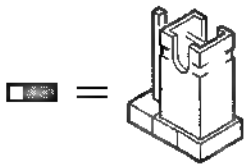

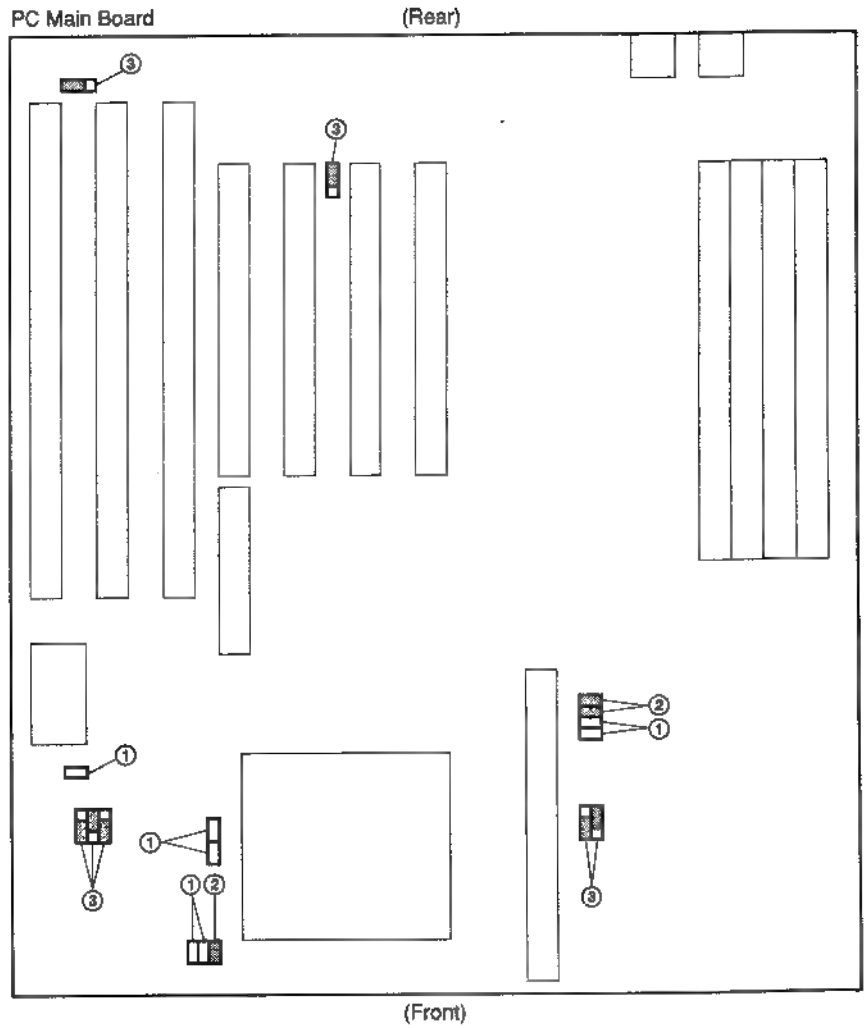

3. Place the thumb and the first and second finger on the ribbed area of the tool. Maintain a small downwartd force to keep the tool butted on the socket.
   Squeeze the thumb and finger together so that the tool legs tend to straighten. This action will draw the chip carrier out of the socket and grip it within the tool legs. Maintain the squeezing action so as to hold the chip in the tool, hold the tool over your other hand and relax the squeeze. The chip will fall out of the tool and into your hand.

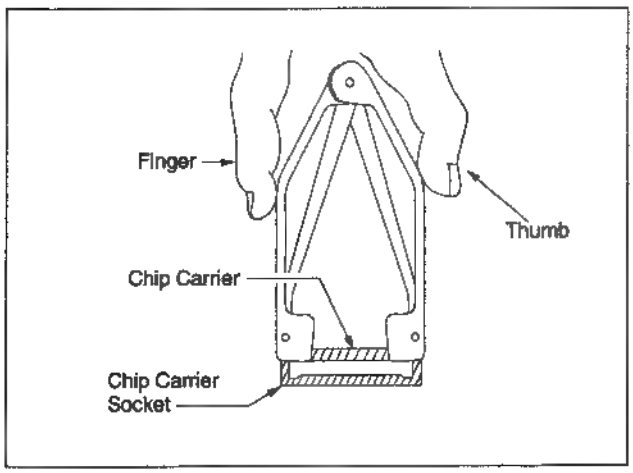

2-8-4. Power Supplied Cord for CE

Power Cord : 1-590-910-11

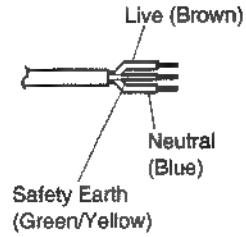

2-9. ERROR MESSAGES

When the system detects an error or failure in operations, settings, connections, or peripheral equipment, ■ message box appears on the monitor. The message box contains a message explaining the cause of the problem and an icon (STOP, !, or i) that indicates how serious it is. The message box also contains buttons such as [Yes] or [No] that allow you to respond to the message.
The following table lists system error messages, explains the function of message box buttons, and explains steps you can take to deal with the problem.

2-9-1. Messages Displayed With The STOP Icon

Message	Buttons/Steps to take
Are you sure that you want to revert to tape clip?	[Yes]: Revert. [No]: Do not revert.
EditStation cannot obtain VTR status. Please check selected VTR.	[OK]: Close the message box.
Insufficient memory to complete this operation.	[Abort]: Stop the process and close the message box.
Not enough memory to allocate the requested number of clips.	[Abort]: Stop the process and close the message box. Steps to take: Delete some of the clips.
One or more disk units are not formatted. It takes about ■ minutes per unit.	[Yes]: Display a format confirmation message. [No]: Stop the process.
Selected VTR is not powered on, or 9-pin cable is not connected.	[OK]: Close the message box.
The device could not be found or recognized.	[OK]: Close the message box. Steps to take: Restart all peripheral equipment.
The dynamic link library <XX> could not be found in the specified path.	[OK]: Close the message box. Steps to take: Reinstall the software.
The EditStation failed to initialize properly.	[OK]: Close the message box. Steps to take: Wait for a few seconds and then restart EditStation. The cause may be that a device driver has not completed initialization, or an old software version in the system control module. This message may be displayed if you start EditStation immediately after starting Windows NT.

(Continued)

Message	Buttons/Steps to take
The requested operation was unsuccessful. -<XX>	[Abort]: Stop the process and close the message box. [Retry]: Try the operation again. Steps to take: Change the arrangement on the timeline and try again. The meanings of error codes (XX) are as follows. Take the appropriate steps when indicated. 3: Error occurred during preroll. Steps to take: Check the VCRs. 4: Error occurred during synchronization. Steps to take: Check the sync grade. 5: EDL too large to be processed in one pass. Steps to take: Delete some of the data on the timeline and try again. 6: Timecode not continuous. Steps to take: Use continuous timecode. 9: Color frame lock failed. 10: No cassette memory on tape. 11: Error occurred in cassette memory. 12: No data in cassette memory. 13: Transfer of data from cassette memory was halted. 14: Undefined cassette memory type. 15: Error occurred during execution. Steps to take: Restart the system. 16: Invalid timecode found. Steps to take: Restart the system. 17: Timeline command execution failed. Steps to take: Restart the system. 18: Devices not ready. Steps to take: Power all devices off and on again. 21: More than 100 effects on the timeline. Steps to take: Delete one or more of the effects on the timeline and try again. 22: No response from peripheral equipment. Steps to take: Power all peripheral equipment off and on again. 23: Invalid timecode settings on the timeline. Steps to take: Reduce the amount of data on the timeline and try again. 25: Title clips are less than 3 seconds apart. Steps to take: Make title clips at least 3 seconds apart. 26: Error occurred in the Disk Recorder. Steps to take: Take either of the following steps depending on the circumstances under which the error occurred. 1) If the error occurs when you turn on the power, check the connection between the ES-7 and the Disk Recorder. Format the Disk Recorder if it has been formatted. 2) If the error occurs during operation, check 1) first and then delete unnecessary clips from the Disk Recorder.
There is not enough space or empty ID on the disk unit. Delete one or more clips and then try again.	[Abort]: Stop the process and close the message box.
This clip does not exist on Disk Recorder. Please upload again.	[OK]: Close the message box.

2-9-2. Messages Displayed With The ⓘ Icon

Message	Buttons/Steps to take
Access denied. System file is in use.	[OK]: Close the message box. Steps to take: Wait for a few seconds and then restart EditStation. The cause may be that the system control module is in use. This message may be displayed if you exit EditStation and then restart it immediately.
Cannot find clip. Insert the correct tape.	[OK]: Close the message box.
Cannot set more than 2 clips.	[OK]: Stop the placement of the clips and close the message box.
Clips and tape reel name do not match. Insert the correct tape.	[OK]: Close the message box.
Confirm to clear Recycle Box. Save <XX> before clearing?	[Yes]: Clear the Recycle Box. [No]: Stop the current process.
Confirm to delete <XX> window?	[Yes]: Delete. [No]: Do not delete.
Delete clips from <XX>?	[OK]: Delete the clip data from the clip database and reel data file, and register the deletions in the project file. [Cancel]: Cancel the selection of the clips and do not delete them.
Disk Recorder is not available. You cannot use uploaded clips on project file.	[OK]: Close the message box. Steps to take: To use the Disk Recorder, restart all equipment.
Disk Recorder is not powered on, or SCSI cable is not connected.	[OK]: Close the message box. Steps to take: To use the Disk Recorder, restart all equipment.
Download not available on this configuration.	[OK]: Execute download at normal speed. [Cancel]: Do not execute the download.
EditStation cannot obtain VTR information. Try this execution from <XX> block?	[Yes]: Restarts from the failed edit. [No]: Cancels the attempted operation. Steps to take: If this message appears and the ES-7 fails to record or download when a DSR-85 is connected as the recorder, check that QSDI was not selected for video input signals when creating the master tape. If QSDI was selected for video input signals when creating the master tape, create a master tape again following the instructions given under "To create a master tape using a DSR-85/85P digital VCR" in this Notice. If QSDI was not selected for video input signals when creating the master tape, clips may have been pasted on timeline without sufficient spacing or the VCR may have failed to synchronize.
Execute ClipLink on analog video format?	[Yes]: Execute. [No]: Do not execute.
Fade In/Out is not adequate to this clip. Please set more than 0 and less than clip duration.	[OK]: Stop the process.
High-speed upload not available on this hardware configuration.	[OK]: Execute upload at normal speed. [Cancel]: Do not execute the upload.
Make sure the tape is in the VTR.	[OK]: Stop the current process. Steps to take: Insert a tape in the VCR and try again.

(Continued)

Message	Buttons/Steps to take
No recorder is found. Do you want to do a Player-Preview?	[Yes]: Execute a Player-Preview. [No]: Do not execute a preview.
Please set more than 5 frames between two effects.	[OK]: Stop the process. Steps to take: Reset the effects on the timeline.
Recorder is disabled. Are you sure you want to record?	[Yes]: Execute the recording. [No]: Do not execute the recording.
Recorder is disabled. Are you sure you want to review?	[Yes]: Execute the review. [No]: Do not execute the review.
Run Disk B-roll?	[Yes]: Run. [No]: Do not run.
There is not empty effect ID. Delete one or more effects and then try again.	[OK]: Stop the process of pasting an effect on the timeline. Steps to take: Delete one or more effects from the timeline.
This clip stretches over two executable units.	[OK]: Cancel the placement of the clip and close the message box.
This operation sets sync grade of all VTR to rough. Continue?	[Yes]: Make color frame setting. [No]: Remove the check from the check box (do not use color frame editing).
This timeline includes a clip not on Disk recorder. Change to hybrid mode? If there are any clips on S3, S4 track, they will be deleted.	[Yes]: Change to hybrid mode. [No]: Cancel the insertion.
This VTR is set Local. Please set Remote and then try again.	[OK]: Stop the current process. Steps to take: Change the VCR control mode to Remote and try again.
This VTR set recording inhibited. Make sure Rec inhibit switch is off.	[OK]: Close the message box.
Title clip cannot be set without video clips.	[OK]: Stop the placement of the clip and close the message box.
You cannot close Clipbin because it is referenced by Timeline.	[OK]: Stop the process.

2-9-3. Messages Displayed With The Icon

Message	Buttons/Steps to take
Cannot create clip. Set duration more than 4.	[OK]: Close the message box.
Cannot execute if you change title clip. Please replace title clip.	[OK]: Close the message box.
Cannot find key <XX> clip.	[OK]: Close the message box.
Cannot read Cassette Memory. Please try again.	[OK]: Close the message box.
Clip not found.	[OK]: Close the message box.
Disk Recorder is not ready. Please check.	[OK]: Close the message box. Steps to take: Restart all devices.
Insert audio 1/2 ch clip?	[1/2]: Insert into channels 1 and 2. [3/4]: Insert into channels 3 and 4. [Cancel]: Stop the process.
Inserted tape does not have Cassette Memory.	[OK]: Close the message box.
No previous clip found.	[OK]: Close the message box.
Save changes to <XX>?	[Yes]: Save the window in the project file and then close the window. [NO]: Close the window without saving it in the project file. [CANCEL]: Stop execution of the command.
Selected VTR does not have ClipLink function.	[OK]: Close the message box.
There are no clips at this position.	[OK]: Close the message box.
There are no MARK at this clip.	[OK]: Close the message box.
There are no OK status clips.	[OK]: Close the message box.
This clip cannot be inserted at this position.	[OK]: Close the message box.
This clip is on tape. Not available on disk recorder.	[OK]: Close the message box.
This effect pattern cannot be set at this position.	[OK]: Close the message box. Steps to take: Change the arrangement on the timeline.
This effect pattern cannot be set by Auto Add.	[OK]: Close the message box.
This port is in use by another device. Please check.	[OK]: Close the message box.
This MARK is out of range. Delete MARK and create clip?	[OK]: Delete the MARK data and create a clip. [Cancel]: Stop the process and do not create a clip.
You selected 2 SDI inputs. Another audio will not be output.	[OK]: Close the message box.
<XX> was changed. Please replace this title clip.	[OK]: Close the message box.

FRONT PANEL AND CD-ROM FLOPPY DISK

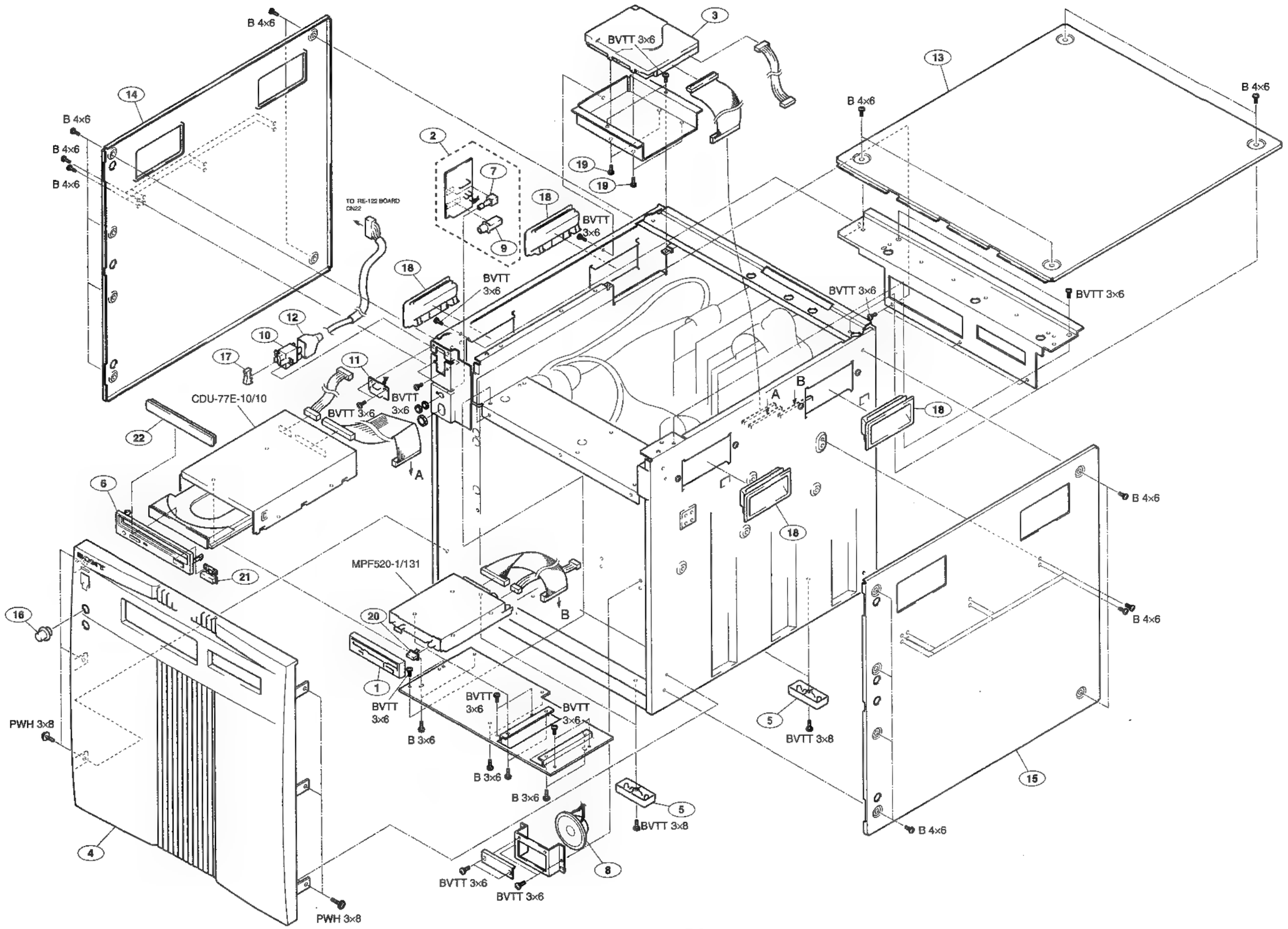

PC ASSY

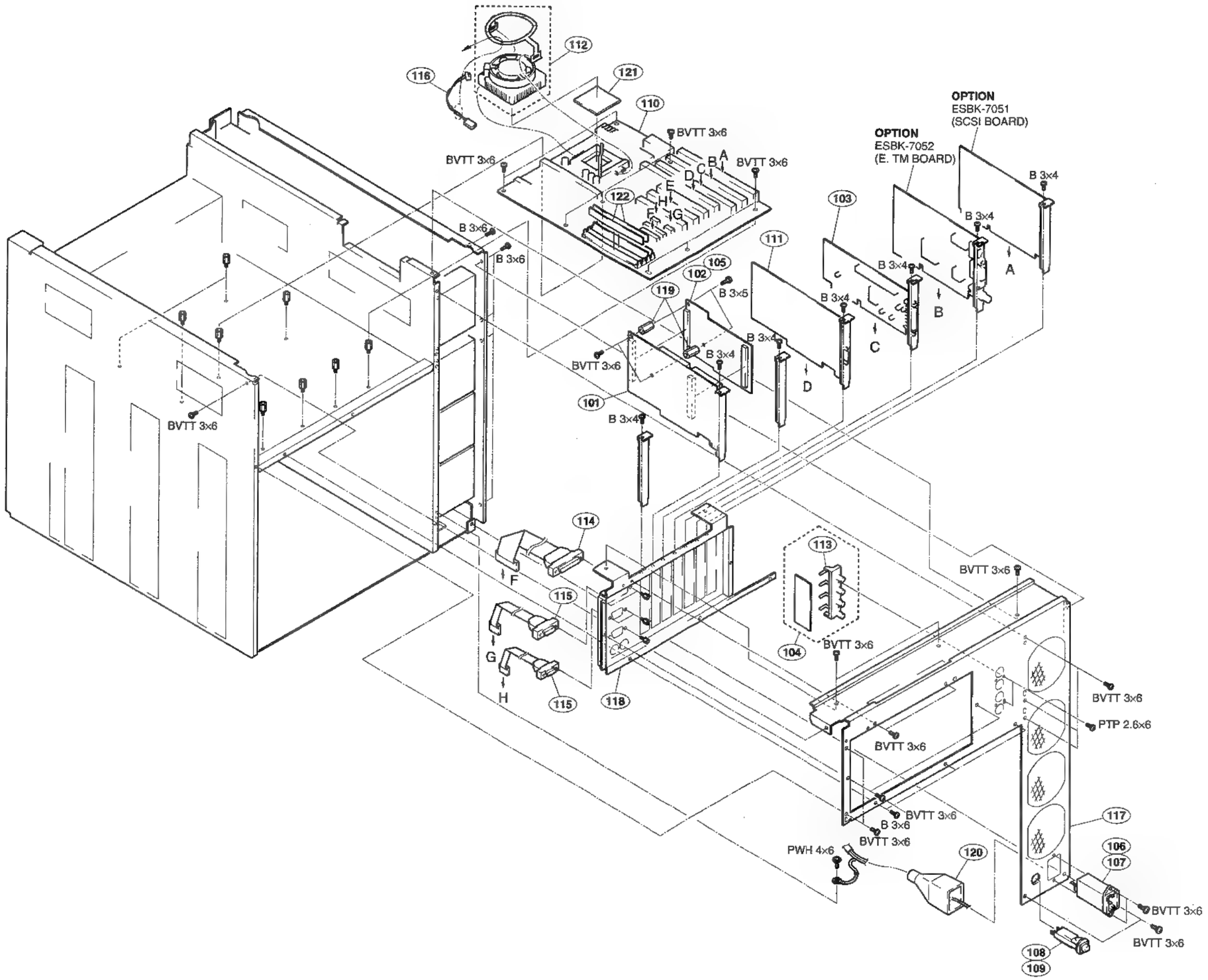
112
116
121
110
BVTT 3x6
BVTT 3x6
BVTT 3x6
B A
C
D
E
H
F
G
122
B 3x6
B 3x6
OPTION
ESBK-7051
(SCSI BOARD)
OPTION
ESBK-7052
(E. TM BOARD)
B 3x4
B 3x4
103
111
105
102
B 3x5
119
B 3x4
B 3x4
B 3x4
B 3x4
A
B
C
D
BVTT 3x6
101
B 3x4
BVTT 3x6
114
F
115
G
H
115
118
113
104
BVTT 3x6
BVTT 3x6
BVTT 3x6
PTP 2.6x6
BVTT 3x6
BVTT 3x6
B 3x6
BVTT 3x6
PWH 4x6
120
117
106
107
BVTT 3x6
BVTT 3x6
108
109

PC ASSY

No.	Parts No.	SP	Description
101	A-8273-914-A	o	MOUNTED CIRCUIT BOARD, VPR-18
102	A-8273-915-A	o	MOUNTED CIRCUIT BOARD, DSC-75 (For J,UC)
103	A-8273-916-A	o	MOUNTED CIRCUIT BOARD, BF-54
104	A-8273-937-A	o	MOUNTED CIRCUIT BOARD, CN-1242
105	A-8273-944-A	o	MOUNTED CIRCUIT BOARD, DSC-75A (For CE)
106 ⚠	1-251-506-11	s	INLET (WITH FILTER) (For J, UC)
107 ⚠	1-251-507-11	s	INLET (WITH FILTER) (For CE)
108 ⚠	1-533-570-11	s	BREAKER, CIRCUIT (For J, UC)
109 ⚠	1-533-630-11	s	BREAKER, CIRCUIT (For CE)
110 *1	1-589-861-11	o	BOARD, PC, MAIN
110 *2	1-761-018-11	s	BOARD, PC, MAIN
111	1-589-888-11	o	BOARD,VGA
112 *1	1-698-827-11	s	FAN, D. C. (WITH HEAT SINK)
112 *2	1-763-027-11	s	FAN, D. C. (WITH HEAT SINK)
113	1-774-966-11	o	CONNECTOR, BNC (RECEPTACLE)
114	1-777-296-11	o	CABLE (WITH CONNECTOR) (25P)
115	1-777-297-11	o	CABLE (WITH CONNECTOR) (9P)
116	1-956-406-11	o	HARNESS, SUB (FAN)
117	3-603-451-02	o	PANEL, REAR
118	3-603-463-01	o	PLATE (2), PC CN
119	3-718-661-01	o	SUPPORT, TC
120	4-601-466-11	s	COVER, 3P INLET
121 *1	8-759-379-37	s	IC A80502-6100
121 *2	8-759-481-25	s	IC FV80502-66200
122 *1	8-749-012-23	s	IC S16265NHC
122 *2	8-749-014-04	o	IC S32265NHC

*1 Serial No. up to 20999 (For J)
Serial No. up to 10999 (For UC)
Serial No. up to 30999 (For CE)

*2 Serial No. 21001 and higher (For J)
Serial No. 11001 and higher (For UC)
Serial No. 31001 and higher (For CE)

POWER SUPPLY

No.	Parts No.	SP	Description
201	A-8273-931-A	o	MOUNTED CIRCUIT BOARD, MB-639
202	A-8273-938-A	o	MOUNTED CIRCUIT BOARD, RE-122 (For J, UC)
203	A-8311-628-A	o	MOUNTED CIRCUIT BOARD, RE-122A (For CE)
204	1-698-779-11	s	FAN, DC
205	1-956-148-11	o	HARNESS, SUB (VPR 1)
206	1-956-149-11	o	HARNESS, SUB (VPR 2)
207	1-956-150-11	o	HARNESS, SUB (BF)
208	1-956-151-11	o	HARNESS, SUB (FP)
209	3-178-164-01	o	RAIL (290), PC BOARD GUIDE

FRAME(ES-7(UC/J/CE))

Ref. No. or Q'ty	Part No.	SP	Description	
*1pc	1-589-861-11	o	BOARD, PC MAIN(P/I-P55TP4XE)	#1
*1pc	1-761-019-11	s	BOARD, PC MAIN	#2
1pc	1-589-888-11	o	BOARD, VGA	
1pc	1-759-216-12	s	DRIVE, HARD DISK (3.5" 1GB)	
2pcs	1-777-295-11	o	CABLE, FLAT 40P, 0.45m (CD-ROM drive to SECONDARY/PC Main board) (Hard disk drive to PRIMARY/PC Main board)	
1pc	1-777-298-11	■	CABLE, FLAT 34P, 0.32m (Floppy disk drive to FLOPPY/PC Main board)	
1pc	1-777-296-11	o	CABLE, FLAT 25P, 0.2m (PRINTER connector/Rear panel to PRINTER/ PC Main board)	
2pcs	1-777-297-11	o	CABLE, FLAT 9P, 0.15m (COM1 connector/Rear panel to COM1/PC Main board) (COM2 connector/Rear panel to COM2/PC Main board)	

Note: The parts with * marked are design-chanded.
Applicable serial numbers are as follows;

#1: Serial No.; up to 10999 (for UC)
; up to 20999 (for J)
; up to 30999 (for CE)

#2: Serial No.; 11001 and higher (for UC)
; 21001 and higher (for J)
; 31001 and higher (for CE)

7-4. PACKING MATERIAL & SUPPLIED ACCESSORIES

ES-7(UC/J/CE)

Ref. No. or Q'ty	Part No.	SP	Description
1pc	⚠ 1-551-812-11	s	CORD, POWER 3P(for UC)
1pc	⚠ 1-557-161-11	s	CORD, POWER 2P(for J)
1pc	1-563-375-11	s	SHELL, D-SUB 9P
1pc	1-568-182-11	o	CONNECTOR, D-SUB 9P, MALE
1pc	⚠ 1-590-910-11	s	CORD, AC POWER 3P(for CE)
1pc	1-759-259-11	o	MOUSE
1pc	1-759-260-21	o	KEYBOARD ASSY (101)
1pc	1-777-294-11	s	CORD, CONNECTION
1pc	3-603-504-01	o	PACKAGE,OS (E)(for UC/CE)
1pc	2-603-505-01	o	PACKAGE,OS (J)(for J)
1pc	3-704-318-01	o	BAG, PROTECTION
1pc	3-856-429-03	s	MANUAL, INSTRUCTION (JAPANESE, FOR J)
1pc	⚠ 3-856-429-12	s	MANUAL, INSTRUCTION (ENGLISH, FOR UC/CE)
1pc	3-856-429-22	s	MANUAL, INSTRUCTION (FRENCH, FOR UC/CE)
1pc	3-856-429-33	s	MANUAL, INSTRUCTION (GERMAN, FOR CE)
1pc	3-856-429-41	s	MANUAL, INSTRUCTION (ITALIAN, FOR CE)
1pc	1-759-311-11	o	CD-ROM

ESBK-7021(UC/J/CE)

Ref. No. or Q'ty	Part No.	SP	Description
1pc	3-856-431-02	s	MANUAL, INSTRUCTION

ESBK-7022(UC/J/CE)

Ref. No. or Q'ty	Part No.	SP	Description
1pc	3-704-046-31	■	BAG,PREVENTION,ELECTRIFICATION
1pc	3-856-431-02	s	MANUAL, INSTRUCTION
6pcs	7-682-545-04	s	SCREW +B 3x4

ESBK-7023(UC/J/CE)

Ref. No. or Q'ty	Part No.	SP	Description
1pc	3-856-431-02	s	MANUAL, INSTRUCTION

ESBK-7024(UC/J/CE)

Ref. No. or Q'ty	Part No.	SP	Description
1pc	3-856-431-02	s	MANUAL, INSTRUCTION
9pcs	7-682-545-04	s	SCREW +B 3x4

ESBK-7031(UC/J/CE)

Ref. No. or Q'ty	Part No.	SP	Description
1pc	3-856-431-02	■	MANUAL, INSTRUCTION

ESBK-7032(UC/J/CE)

Ref. No. or Q'ty	Part No.	SP	Description
1pc	3-856-431-02	s	MANUAL, INSTRUCTION
5pcs	1-765-112-12	o	CABLE ASSY, COAXIAL
8pcs	7-682-947-01	s	SCREW +PSW 3x6

ESBK-7041(UC/J/CE)

Ref. No. or Q'ty	Part No.	SP	Description
1pc	3-856-431-02	s	MANUAL, INSTRUCTION

ESBK-7071(UC/J/CE)

Ref. No. or Q'ty	Part No.	SP	Description
1pc	1-759-312-11	o	CD-ROM
1pc	3-704-046-91	s	BAG, PREVENTION, ELECTRIFICATION
5pcs	7-682-947-01	s	SCREW +PSW 3x6

OPTIONAL FIXTURE

Part No.	SP	Description
J-6381-380-A	o	CABLE, VIDEO(S-BNC)
J-6441-950-A	o	EXTENSION BOARD, EX-488
J-6442-500-A	o	EXTENSION BOARD, EX-619

SONY

エディットステーション

EDITSTATION

ES-7

BASIC DME SWITCHER BOARD
ESBK-7021

3D EFFECT BOARD FOR BASIC DME SWITCHER
ESBK-7022

ADVANCED DME SWITCHER BOARD
ESBK-7023

3D EFFECT BOARD FOR ADVANCED DME SWITCHER
ESBK-7024

EXTERNAL SWITCHER INTERFACE BOARD
ESBK-7025

QSDI INTERFACE BOARD
ESBK-7031

SDI INTERFACE BOARD
ESBK-7032

DISK RECORDER BOARD
ESBK-7041

SCSI OPTION
ESBK-7051

ETHERNET OPTION
ESBK-7052

ESDRAW
ESBK-7071

FACTORY SERVICE MANUAL

1st Edition

サービス用のマニュアル

安全のために

設置や保守，点検，修理などを行う前に，この「安全のために」と，サービス用のマニュアルをよくお読みください。

サービス技術者へ

⚠警告

ソニー製品は安全に十分に配慮して設計されています。しかし，電気製品はサービス時に間違った扱い方をすると，火災や感電などにより死亡や大けがなど人身事故につながることがあり，危険です。この「安全のために」は事故を防ぐために重要な注意事項を示しています。この「安全のために」及び別冊の取扱説明書の「⚠警告⚠注意」をよくお読みの上，安全に設置や保守，点検，修理などを行ってください。
この「安全のために」は，製品全般の注意事項が記されておりますので，この機器をサービスする時には当てはまらない内容も含まれております。

警告表示の意味
このサービス用のマニュアルおよび製品では，次のような表示をしています。表示の内容をよく理解してから本文をお読みください。

⚠警告

この表示の注意事項を守らないと，火災や感電などにより死亡や大けがなど人身事故につながることがあります。

注意を促す記号

注意

火災

感電

行為を指示する記号

プラグをコンセントから抜く

強制

⚠警告 火災 感電 下記の注意を守らないと，
火災や感電による死亡や大けがにつながることがあります。

1. 感電にご注意を

・部品交換の場合は感電の危険があるので電源プラグを抜いてください。
・内部には高電圧の部分があり，通電時においては感電の危険がありますので充分ご注意ください。

2. 指定部品を使用する

回路図，部品表に⚠印で指定されている部品は安全重要部品ですので指定のものをご使用ください。

3. 部品の取付けや配線の引き回しは元通りにする

・チューブやテープなどの絶縁材料を使用した部品，及びプリント基板から浮かして取付けた部品を元通りにする。
・引き回しやクランパーで発熱部品，高圧部品及び可動部分に接近しないように処理したハーネスの引き回しを元通りにする。

4. 電池についてのご注意

・電池は，正しく交換しないと爆発する危険があります。電池を交換する場合には必ずマニュアルで指定している電池を使用してください。
・火の中に入れないでください。ショートさせたり，分解，加熱しないでください。発熱，発火，破裂の恐れがあります。
・使用済電池は，端子(金属部分)にテープを貼るなどの処理をし，指定の方法で廃棄してください。
・使用済ニカド電池はリサイクル協力店にご持参ください。

5. レーザー光を直視しない

レーザー光放射による被爆を受けると，目に損傷を与える危険があります。
光学ブロックの調整やシールドケースを外すときは，以下の注意を厳守してください。
・対レーザー光線保護眼鏡を正しく着用する。
・マニュアルにしたがって作業する。
・シールドケースを外したまま，機器を放置しない。
・整備作業終了後，ただちにシールドケースを正しく取り付ける。

6. ラックマウントした機器を2台以上同時に引き出さない。又，手や指をはさまない。

・2台以上同時に引き出すと，機器の重みでラックが転倒し，大けがの原因になります。
・一度にラックから引き出すのは1台だけにしてください。また，ラックが転倒・移動しないように適切な処置を取ってください。
・ラックマウントした機器を収納するときおよび引き出すとき，手や指をはさむと，けがの原因となります。

7. サービス後は安全点検を

サービスのために取り外したネジ，部品，配線がもとどおりになっているか確認してください。
またサービスした箇所の周辺の部品及び線材の損傷してしまったところがないかなどを点検してください。
・感電・漏電を防ぐために金属部と電源プラグの絶縁チェックを行ってください。
(絶縁チェックの方法)
電源コンセントから電源プラグを抜き，電源スイッチをいれます。500 V絶縁抵抗計を用いて電源プラグのそれぞれの端子と外部露出金属部との間で，絶縁抵抗値が1MΩ以上であること。この値以下の時はセットの点検修理が必要です。

このマニュアルについて

本書の目的

本書は、ビデオ編集システムを構成するエディットステーション ES-7 と下記に示すオプション基板のファクトリーサービスマニュアルです。

ベーシック DME スイッチャーボード	: ESBK-7021
ベーシック DME スイッチャー用 3D エフェクトボード	: ESBK-7022
アドバンスト DME スイッチャーボード	: ESBK-7023
アドバンスト DME スイッチャー用 3D エフェクトボード	: ESBK-7024
エクスターナルスイッチャーインターフェースボード	: ESBK-7025
QSDI インターフェースボード	: ESBK-7031
SDI インターフェースボード	: ESBK-7032
ディスクレコーダーボード	: ESBK-7041
SCSI オプション	: ESBK-7051
イーサネットオプション	: ESBK-7052
ES Draw	: ESBK-7071

本システムを構成する機種について、部品レベルまでのサービスを前提とした情報（回路図・マウント図・詳細パーツリスト等）を記載したマニュアルです。

構成

本書の構成を把握していただくために、全章の概略を以下に紹介します。

第 1 章　BLOCK DIAGRAMS
各基板の機能や信号の流れを示すブロック図を掲載しています。

第 2 章　SCHEMATIC DIAGRAMS
全プリント基板の回路図を掲載しています。

第 3 章　BOARD LAYOUTS
全プリント基板のパターンとシンボル図を掲載しています。

第 4 章　SEMICONDUCTOR PIN ASSIGNMENTS
使用半導体の外形および IC については概略の機能ブロックや、ピン名称を掲載しています。

第 5 章　SPARE PARTS & OPTIONAL FIXTURES
セットの全サービス部品について記載しています。

本書中のイーサネットまたは Ethernet は富士ゼロックス株式会社の登録商標です。

関連マニュアル

本機には、この「ファクトリーサービスマニュアル」の他に下記の取扱説明書およびマニュアルが用意されています。

・サービスマニュアル（各製品に付属していません）

部品番号：9-977-659-01 ＜ ES-7/ESBK-7021/ESBK-7022/ESBK-7023/ESBK-7024/ESBK-7025/ESBK-7031/ESBK-7032/ESBK-7041/ESBK-7051/ESBK-7052/ESBK-7071 ＞

部品番号：9-977-662-01 ＜ ESBK-7011 ＞

部品番号：9-977-663-01 ＜ ESBK-7045 ＞

ブロックおよび基板交換によるサービスへの対応を前提としたサービス情報を記載しています。

・取扱説明書（各製品に付属しています）

部品番号：3-856-429-01 ＜ ES-7 ＞

部品番号：3-856-422-01 ＜ ESBK-7011 ＞

部品番号：3-856-431-01 ＜ ESBK-7021/7022/7023/7024/7025/7031/7032/7041 ＞

部品番号：3-858-088-01 ＜ ESBK-7045 ＞

部品番号：3-856-427-01 ＜ ESBK-7051 ＞

部品番号：3-858-273-01 ＜ ESBK-7052 ＞

部品番号：3-856-854-01 ＜ ESBK-7071 ＞

部品番号：3-856-430-01 ＜ RMM-ES7 ＞

部品番号：3-858-087-01 ＜ RMM-ES701 ＞

各製品を実際に運用および操作するのに必要な情報を記載しています。

・ES Draw オペレーションマニュアル ESBK-7092J
（ESBK-7071 に付属していません）

ES Draw ESBK-7071 の詳しい操作方法を記載しています。

・オンラインマニュアル（ES-7 に付属する CD-ROM ディスクに収録）
およびエディットステーションユーザーガイド ESBK-7091J
(ES-7 に付属していません）

エディットステーションユーザーガイドESBK-7091JはCD-ROMディスクに収録されているオンラインマニュアルを印刷したガイドです。

エディットステーション ES-7 の詳しい操作方法を記載しています。

取扱説明書には記載されていない編集操作の詳細や細かい設定について記載しています。

MANUAL STRUCTURE

Purpose of This Manual

This manual is the Factory Service Manual of the Edit Station ES-7 and the following option boards.

Basic DME switcher board	: ESBK-7021
3D effect board for basic DME switcher	: ESBK-7022
Advanced DME switcher board	: ESBK-7023
3D effect board for advanced DME switcher	: ESBK-7024
External switcher interface board	: ESBK-7025
QSDI interface board	: ESBK-7031
SDI interface board	: ESBK-7032
Disk recorder board	: ESBK-7041
SCSI option	: ESBK-7051
Ethernet option	: ESBK-7052
ES Draw	: ESBK-7071

This manual describes the information (board layouts, schematic diagrams and detailed parts list) and covers information on parts.

Contents

The sections covered in the manual are summarized below to give you a general understanding of the manual.

SECTION 1. BLOCK DIAGRAMS

Illustrates the block diagrams which show each board function and signal flow.

SECTION 2. SCHEMATIC DIAGRAMS

Shows the schematic diagrams of all the circuit boards.

SECTION 3. BOARD LAYOUTS

Shows the board layouts of all the circuit boards.

SECTION 4. SEMICONDUCTOR PIN ASSIGNMENTS

Shows the external dimensions of the semiconductors used, and describes outlines of the function blocks and pin names of the ICs.

SECTION 5. SPARE PARTS & OPTIONAL FIXTURES

Describes the electrical parts list, packing materials & supplied accessories and optional fixtures.

Ethernet is a registered trademark of FUJI XEROX CO., LTD.

Related Manuals

In addition to this Factory Service Manual, the following operating instructions and manuals are provided.

- **Service Manual (Not supplied with each equipment)**
  Part No. 9-977-660-01 <ES-7/ESBK-7021/ESBK-7022/ESBK-7023/ESBK-7024/ESBK-7025/ESBK-7031/ESBK-7032/ESBK-7041/ESBK-7051/ESBK-7052/ESBK-7071>
  Part No. 9-977-662-01 <ESBK-7011>
  Part No. 9-977-663-01 <ESBK-7045>
  Describes the servicing information for blocks and boards replacements of the equipment.

- **Operating Instructions (Supplied with each equipment)**
  Part No. 3-856-429-11 <ES-7 English>
  Part No. 3-856-429-21 <ES-7 French>
  Part No. 3-856-429-31 <ES-7 German>
  Part No. 3-856-422-01 <ESBK-7011 English/French/German>
  Part No. 3-856-431-01 <ESBK-7021/7022/7023/7024/7025/7031/7032/7041 English/French/German>
  Part No. 3-858-088-01 <ESBK-7045 English/French/German>
  Part No. 3-856-427-01 <ESBK-7051 English/French/German>
  Part No. 3-858-273-01 <ESBK-7052 English/French/German>
  Part No. 3-856-854-01 <ESBK-7071 English/French/German>
  Part No. 3-856-430-01 <RMM-ES7 English/French/German>
  Part No. 3-858-087-01 <RMM-ES701 English/French/German>
  Describes the information for the application and operation of each equipment.

- **ES Draw Operation Manual ESBK-7092E (Not supplied with ESBK-7071)**
  Describes the detailed information about how to use ESDraw ESBK-7071.

- **Online Manual (Supplied on CD-ROM) and Operation Manual ESBK-7091E (Not supplied with ES-7)**
  The Operation Manual ESBK-7091E is a printed version of a CD-ROM disc that contains an online manual.
  Describes the detailed instructions about how to operate the Edit Station and the details of operation and installation which are not covered in the Operation Instructions.

目次
TABLE OF CONTENTS

1. BLOCK DIAGRAMS

OVERALL BLOCK 1-1
AUDIO MIXER 1-2
SYSTEM CONTROL 1-3
VIDEO I/O 1-4
VRAM 1-5
POWER SUPPLY 1-6
VIDEO INPUT 1-7
VIDEO OUTPUT 1-8
CPU 1-10
FRAME 1-11
MEMORY 1-12
3D EFFECT 1-15
CPU 1-16
SWITCHER 1-17
MEMORY 1-18
ADDRESS GEN 1-20
LIGHTING 1-21
TRAIL 1-22
MONITOR 1-23
QSDI I/F, SDI I/F 1-24
DISK UNIT CONTROL 1-25
AUDIO 1-26
VIDEO 1-27

2. SCHEMATIC DIAGRAMS

AU-217 2-2
SY-219 2-25
VPR-18 2-30
DSC-75/75A 2-34
BF-54 2-37
RE-122/122A 2-38
AD-115/115A 2-40
DA-95/95A 2-59
FM-43/43A 2-72
MY-74 2-82
PU-84A 2-90
FM-44/44A 2-94
MY-75 2-104
VE-33/33A 2-118
DAC-20/20A 2-126
IO-119 2-132
IO-148 2-154
MPU-95 2-170
RP-89/89A 2-188
FRAME 2-222

3. BOARD LAYOUTS

AU-217 3-2
SY-219 3-4
VPR-18 3-6
DSC-75/75A 3-8
BF-54 3-9
RE-122/122A 3-10
AD-115/115A 3-12
DA-95/95A 3-14
FM-43/43A 3-16
MY-74 3-18
PU-84A 3-20
FM-44/44A 3-22
MY-75 3-24
VE-33/33A 3-26
DAC-20/20A 3-28
IO-119 3-30
IO-148 3-32
MPU-95 3-34
RP-89/89A 3-36

4. SEMICONDUCTOR PIN ASSIGNMENTS

5. SPARE PARTS & OPTIONAL FIXTURES

5-1. NOTES ON SPARE PARTS 5-1
5-2. EXPLODED VIEWS 5-2
5-3. ELECTRICAL PARTS LIST 5-14
5-4. PACKING MATERIAL & SUPPLIED ACCESSORIES 5-154
5-5. OPTIONAL FIXTURES 5-155

SECTION 1
BLOCK DIAGRAMS

OVERALL BLOCK

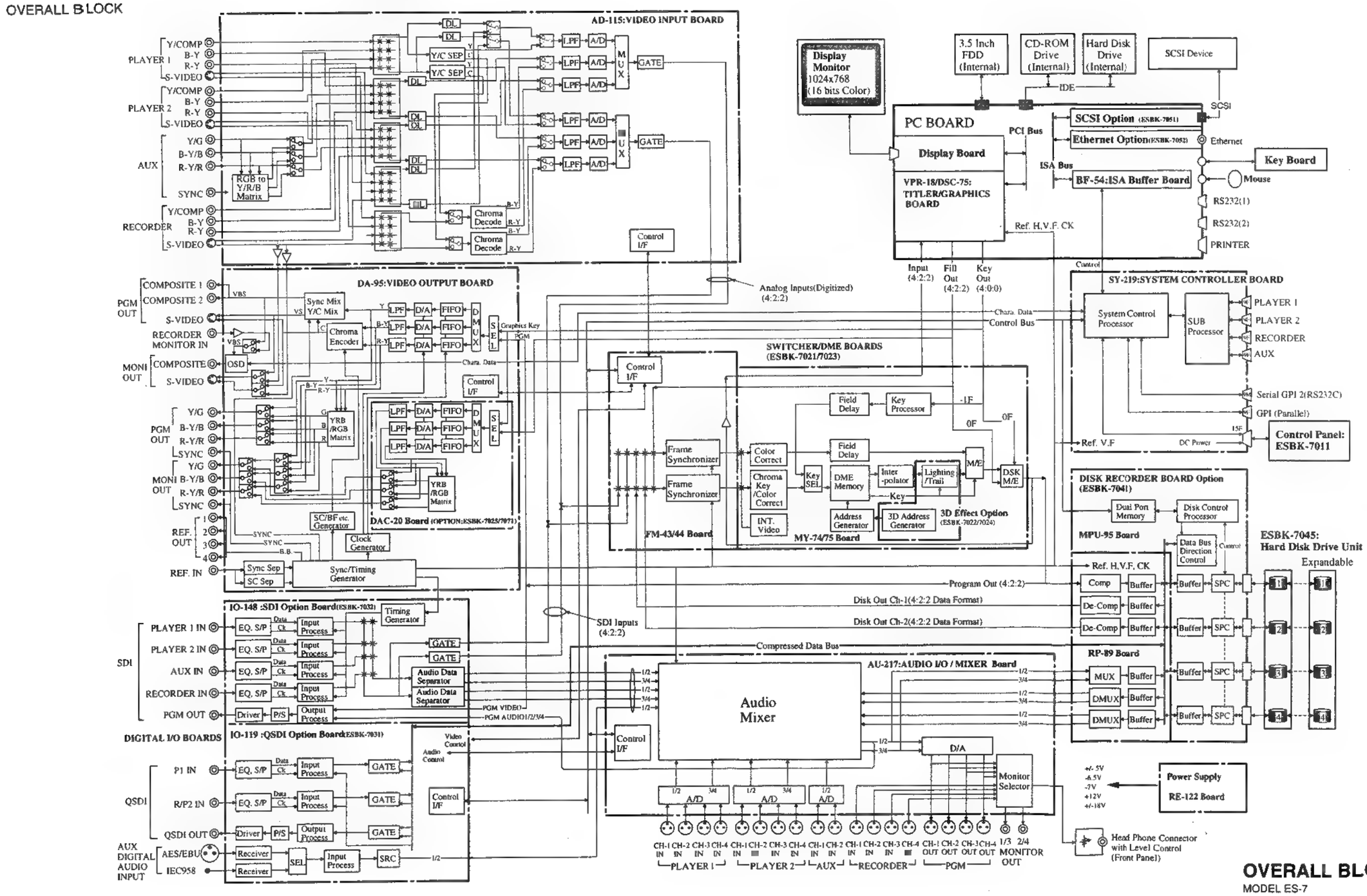

OVERALL BLOCK
MODEL ES-7

AU-217 : AUDIO MIXER

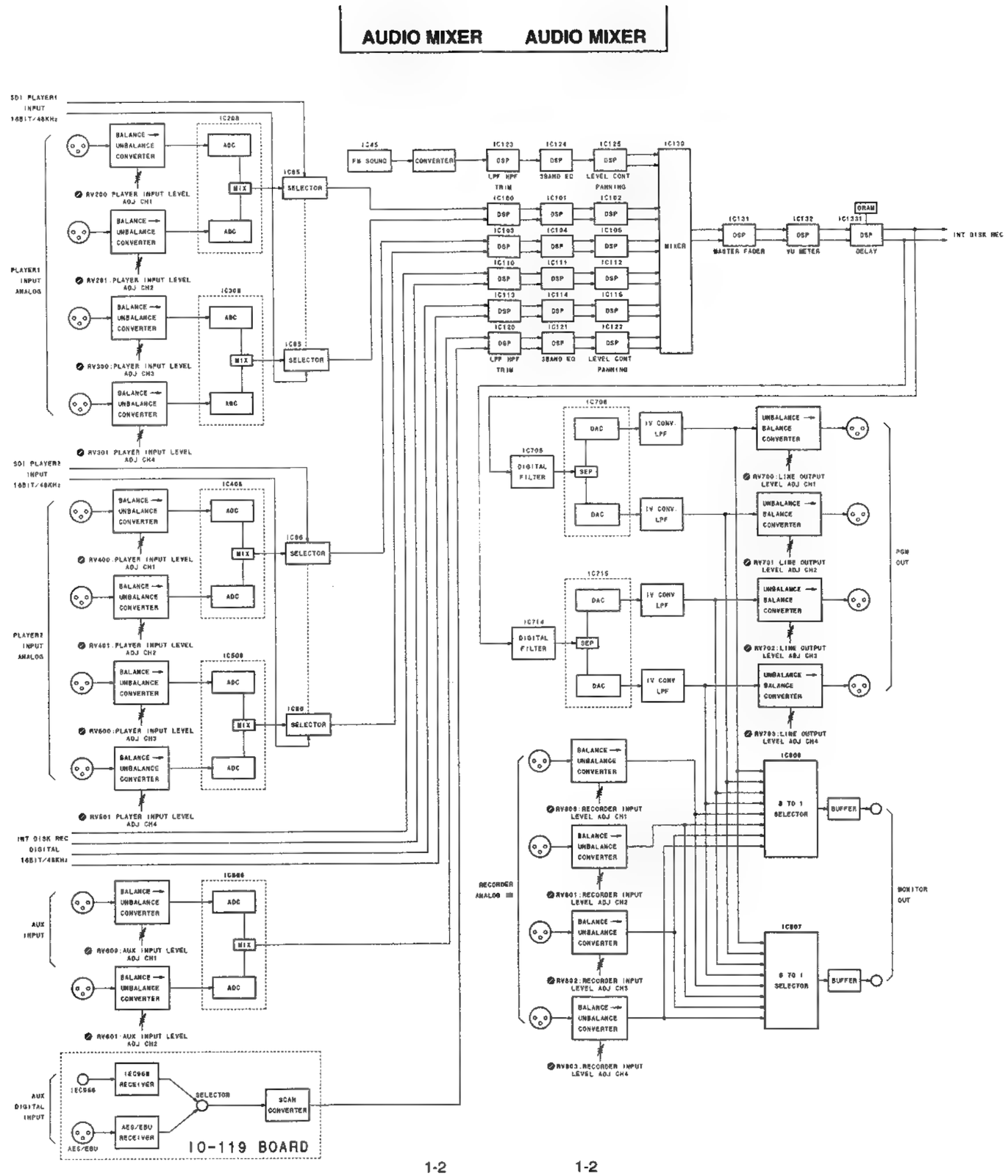

1-2 1-2

AU-217
MODEL ES-7
B-ES7-AU217-BLOCK

SY-219 : SYSTEM CONTROL

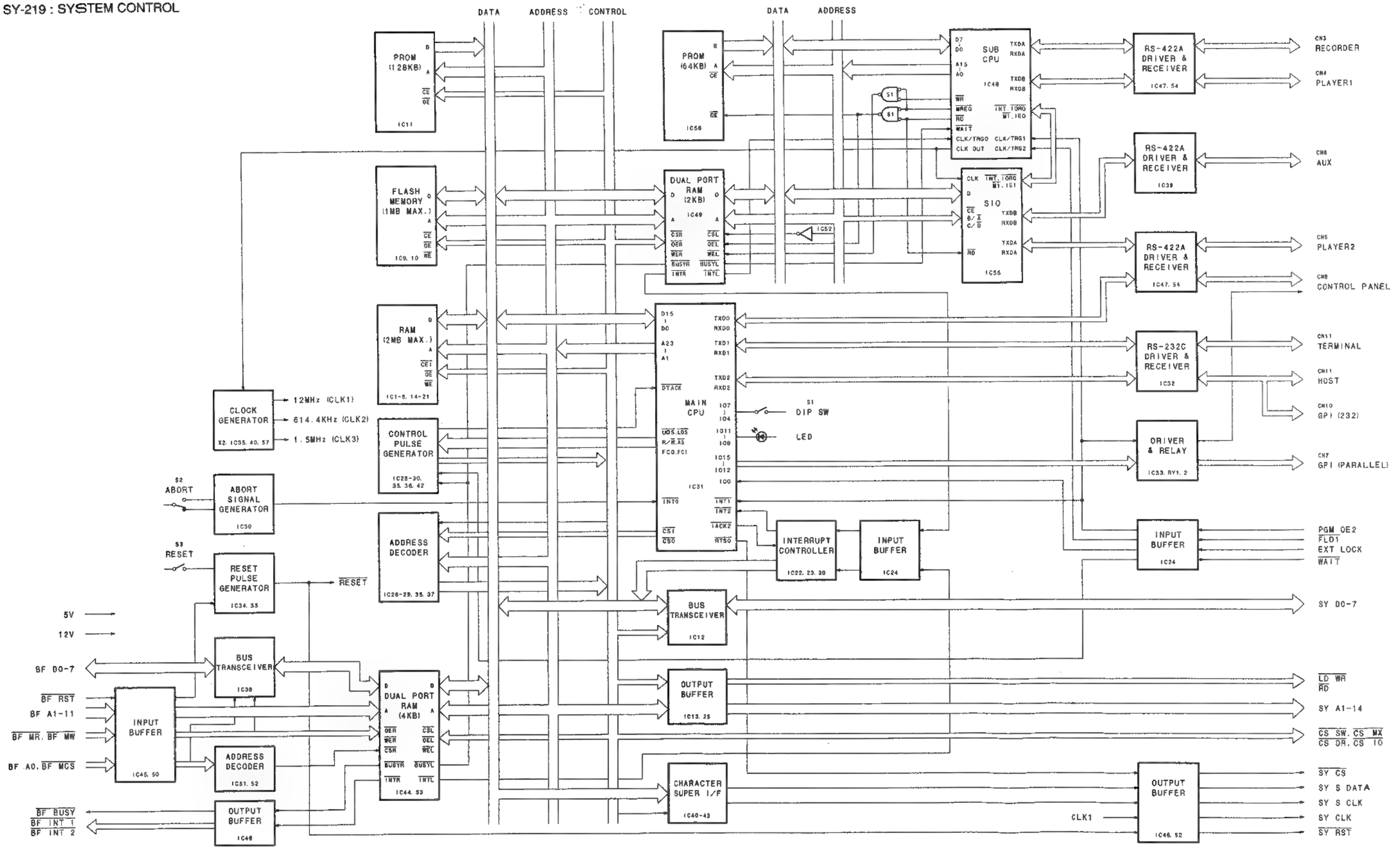

SY-219
MODEL ES-7
B-ES7-SY219-BLOCK

VPR-18 : VIDEO I/O

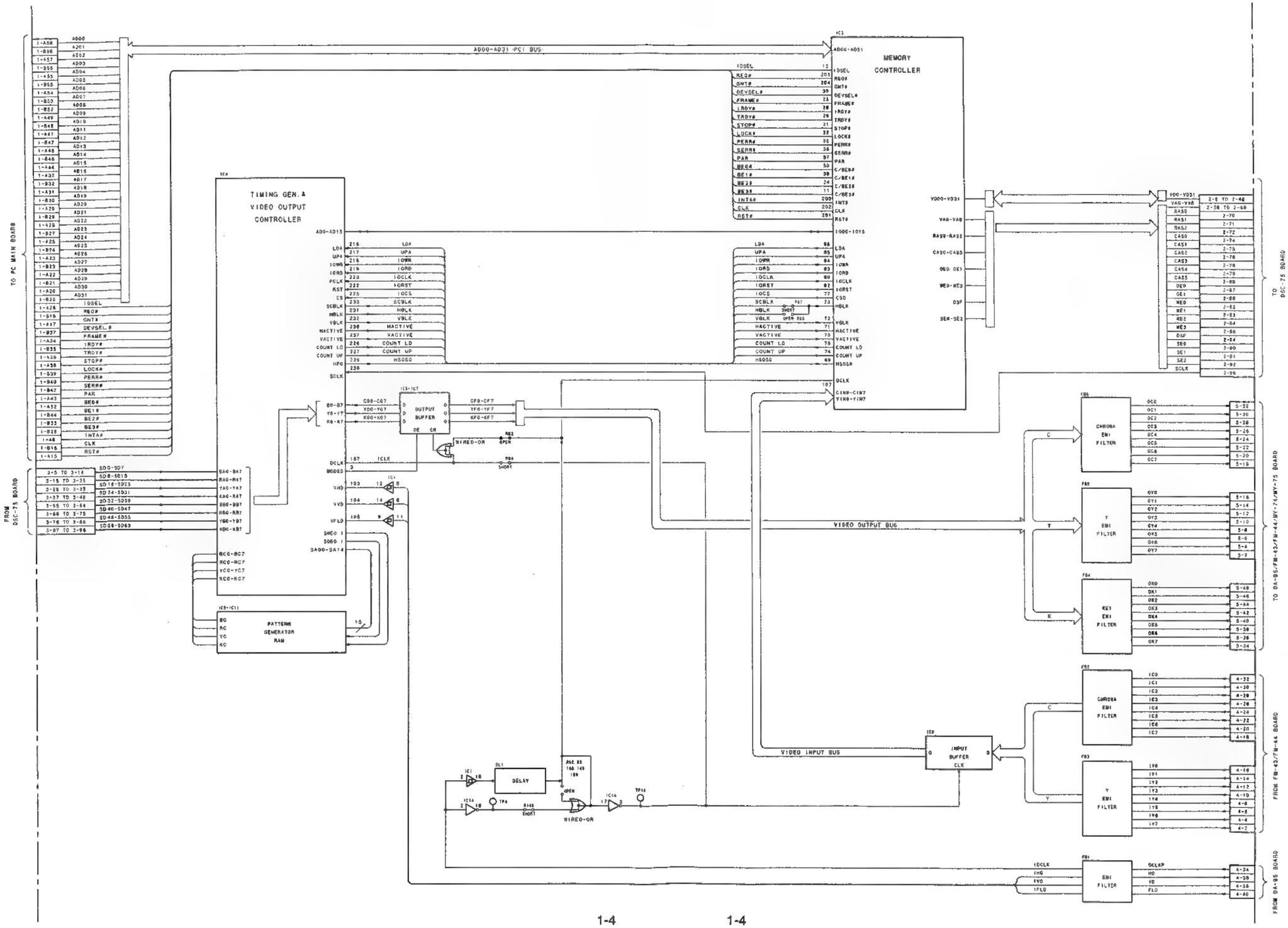

VPR-18
MODEL ES-7

VRAM VRAM

DSC-75/75A : VRAM

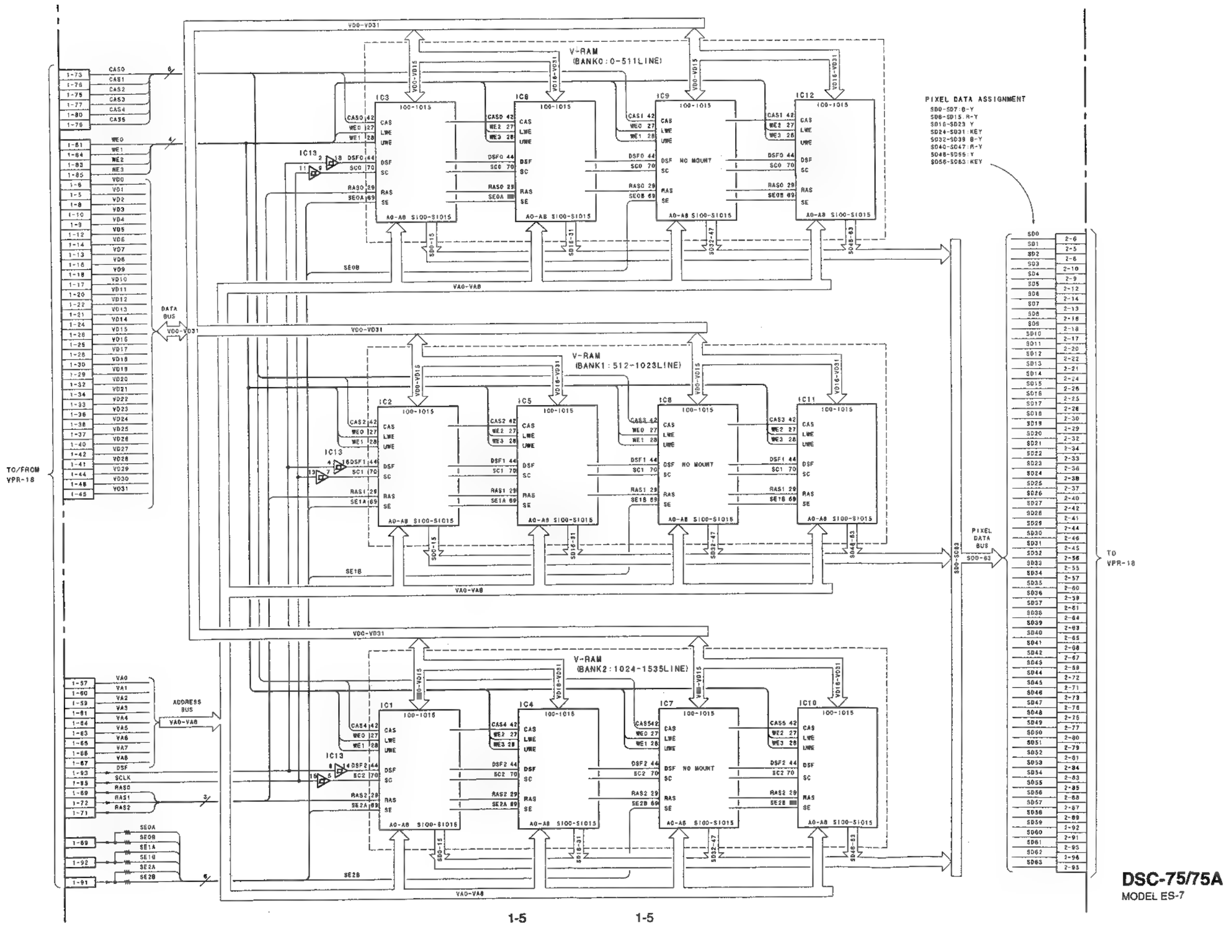

1-5 1-5

DSC-75/75A
MODEL ES-7

RE-122/122A : POWER SUPPLY

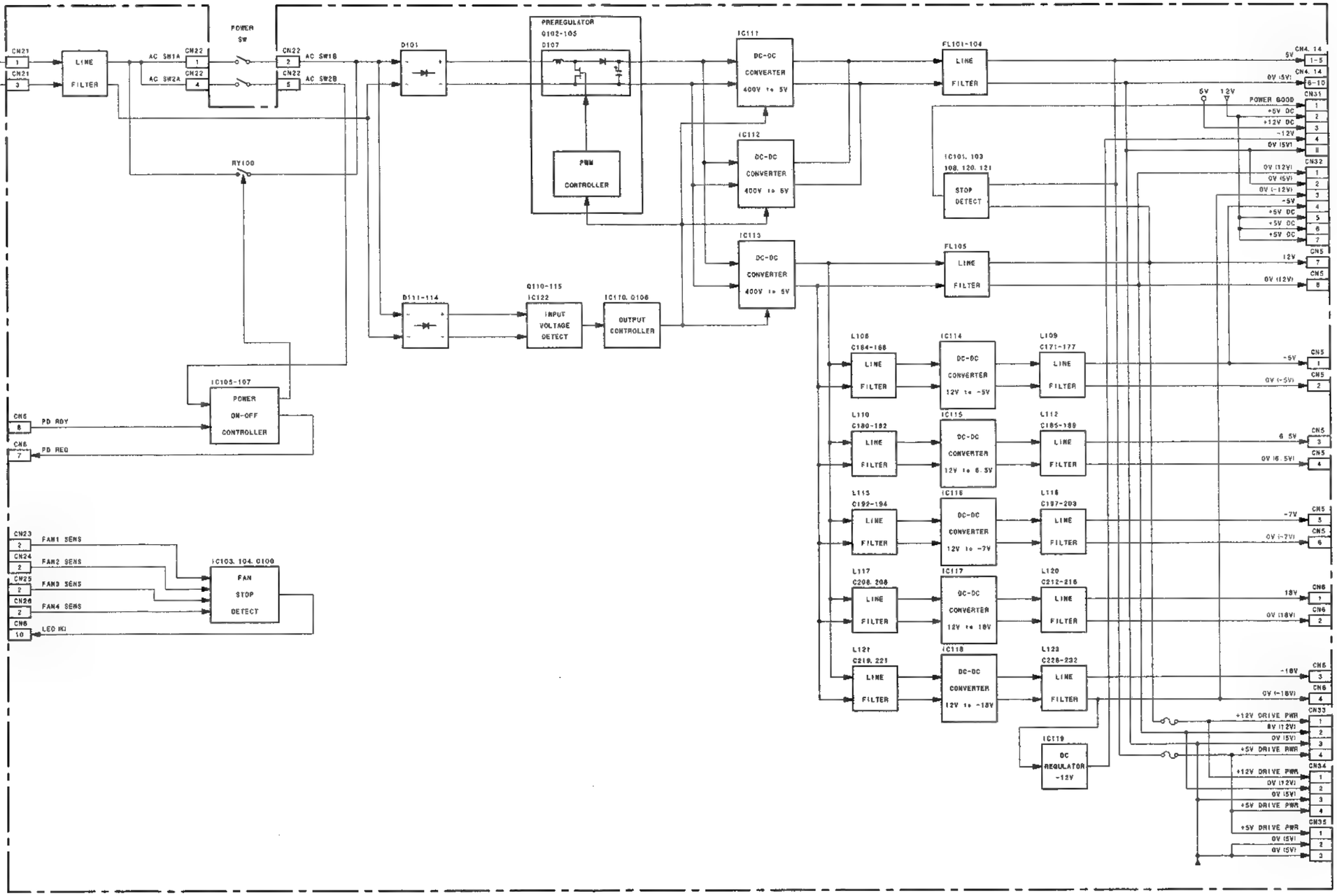

RE-122/122A
MODEL ES-7
B-ES7-RE122-BLOCK

AD-115/115A : VIDEO INPUT

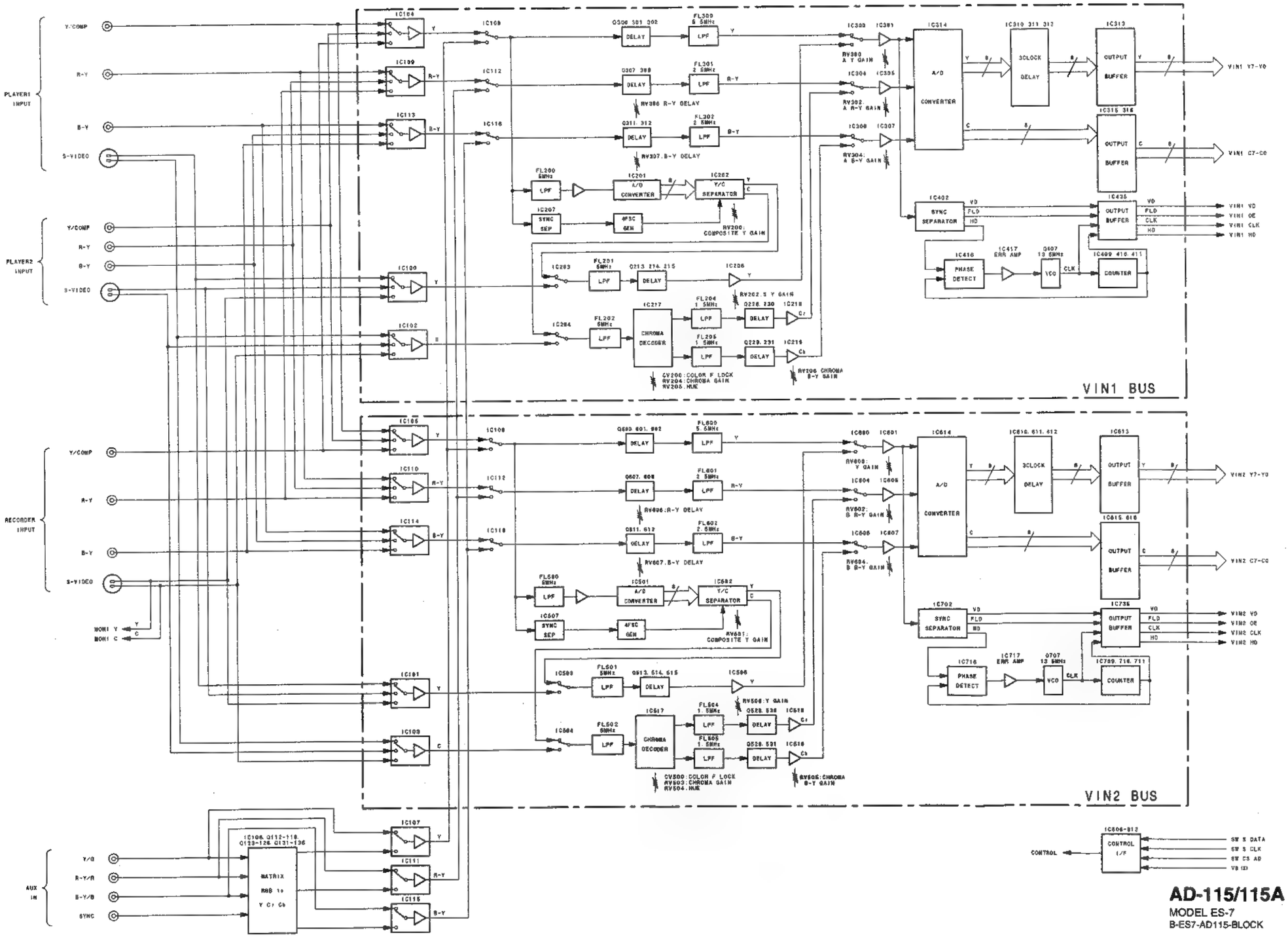

AD-115/115A
MODEL ES-7
B-ES7-AD115-BLOCK

DA-95/95A : VIDEO OUTPUT

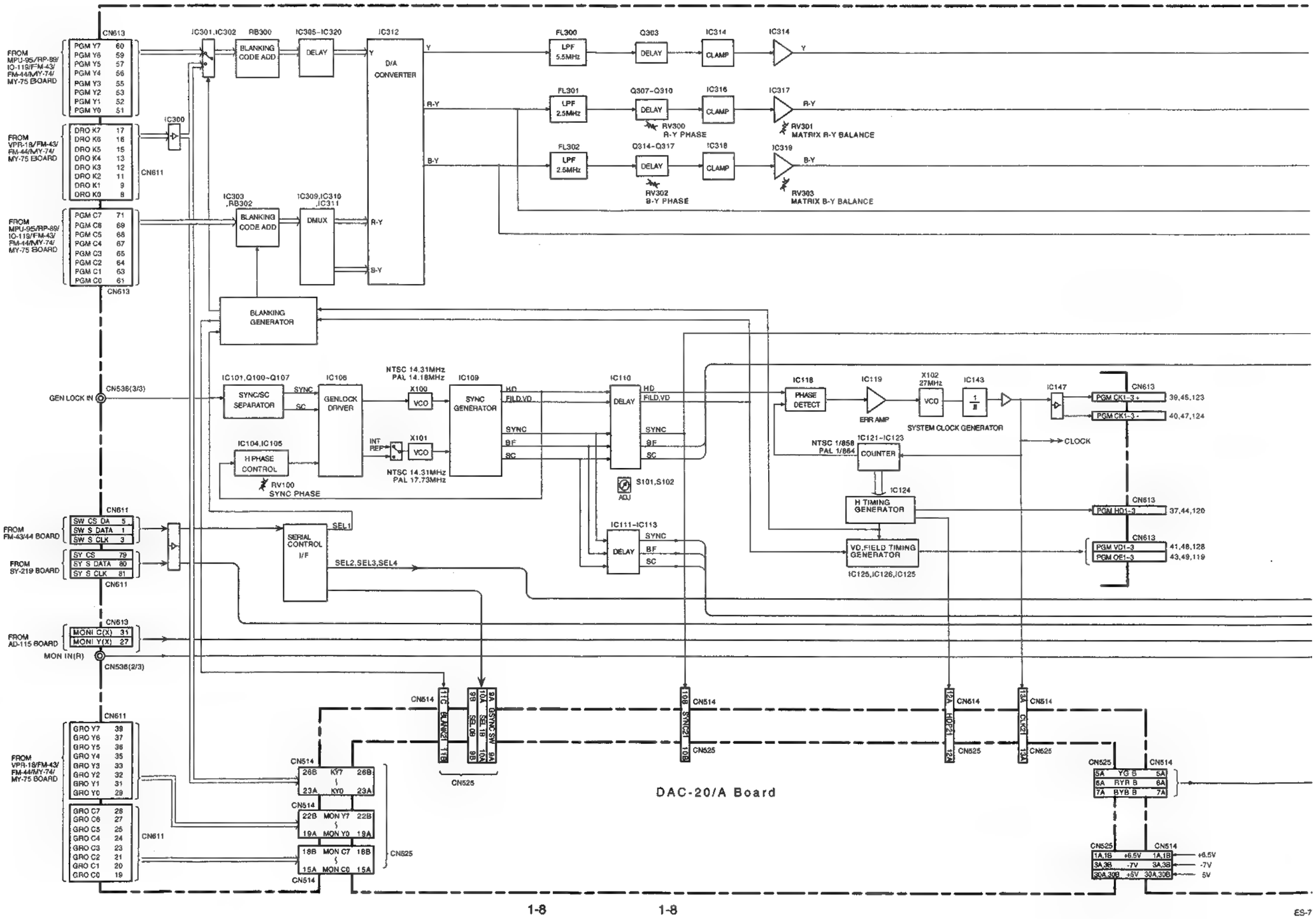

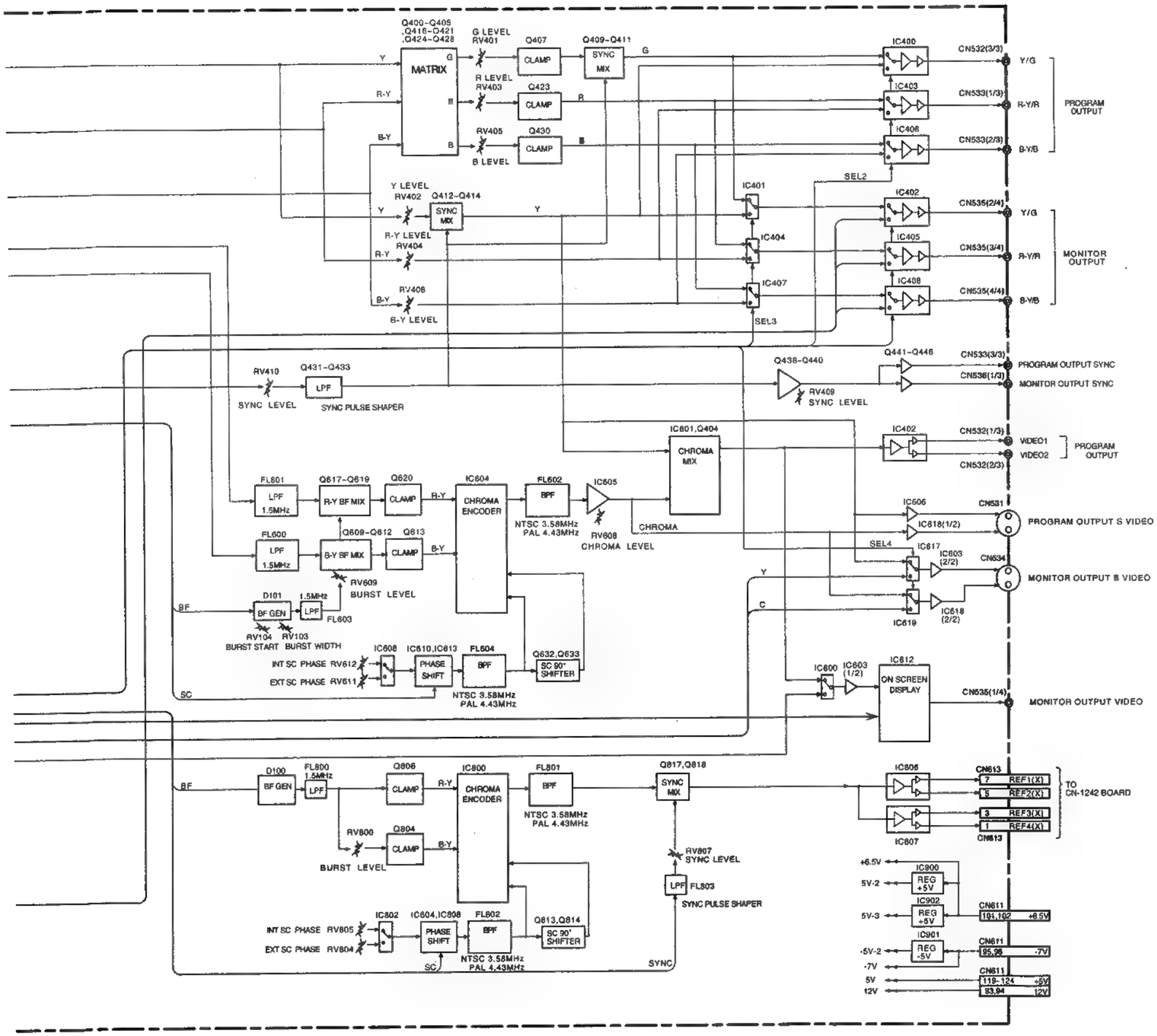
Q400~Q405 ,Q416~Q421 ,Q424~Q428
MATRIX
G LEVEL RV401
R LEVEL RV403
B LEVEL RV405
Q407 CLAMP
Q423 CLAMP
Q430 CLAMP
Q409~Q411 SYNC MIX
Y LEVEL RV402
R-Y LEVEL RV404
B-Y LEVEL RV406
Q412~Q414 SYNC MIX
IC401
IC404
IC407
SEL2
SEL3
IC400
IC403
IC406
IC402
IC405
IC408
CN532(3/3) Y/G
CN533(1/3) R-Y/R
CN533(2/3) B-Y/B
PROGRAM OUTPUT
CN535(2/4) Y/G
CN535(3/4) R-Y/R
CN535(4/4) B-Y/B
MONITOR OUTPUT
RV410 SYNC LEVEL
Q431~Q433 LPF SYNC PULSE SHAPER
Q438~Q440
RV409 SYNC LEVEL
Q441~Q446
CN533(3/3) PROGRAM OUTPUT SYNC
CN536(1/3) MONITOR OUTPUT SYNC
IC801,Q404 CHROMA MIX
IC402
CN532(1/3) VIDEO1
CN532(2/3) VIDEO2
PROGRAM OUTPUT
FL601 LPF 1.5MHz
Q617~Q619 R-Y BF MIX
Q620 CLAMP
IC604 CHROMA ENCODER
FL602 BPF
NTSC 3.58MHz PAL 4.43MHz
IC605
RV608 CHROMA LEVEL
CHROMA
FL600 LPF 1.5MHz
Q609~Q612 B-Y BF MIX
Q613 CLAMP
RV609 BURST LEVEL
D101 BF GEN
1.5MHz LPF FL603
RV104 BURST START
RV103 BURST WIDTH
BF
SC
IC608
IC610,IC613 PHASE SHIFT
FL604 BPF
INT SC PHASE RV612
EXT SC PHASE RV611
Q632,Q633 SC 90° SHIFTER
NTSC 3.58MHz PAL 4.43MHz
IC506
IC618(1/2)
CN531
PROGRAM OUTPUT S VIDEO
SEL4
IC617
IC603 (2/2)
CN534
MONITOR OUTPUT B VIDEO
IC618 (2/2)
IC619
Y
C
IC600
IC603 (1/2)
IC612 ON SCREEN DISPLAY
CN535(1/4)
MONITOR OUTPUT VIDEO
D100 BF GEN
FL800 1.5MHz LPF
Q806 CLAMP
IC800 CHROMA ENCODER
FL801 BPF
NTSC 3.58MHz PAL 4.43MHz
RV800 BURST LEVEL
Q804 CLAMP
Q817,Q818 SYNC MIX
RV807 SYNC LEVEL
LPF FL803
SYNC PULSE SHAPER
SYNC
IC802
IC804,IC808 PHASE SHIFT
FL802 BPF
INT SC PHASE RV805
EXT SC PHASE RV804
Q813,Q814 SC 90° SHIFTER
NTSC 3.58MHz PAL 4.43MHz
IC805
IC807
CN613
7 REF1(X)
5 REF2(X)
3 REF3(X)
1 REF4(X)
TO CN-1242 BOARD
+6.5V
5V-2
5V-3
-5V-2
-7V
5V
12V
IC900 REG +5V
IC902 REG +5V
IC901 REG -5V
CN611 101,102 +6.5V
CN611 95,96 -7V
CN611 119~124 +5V
CN611 93,94 12V

FM-43/43A (1/2) : CPU

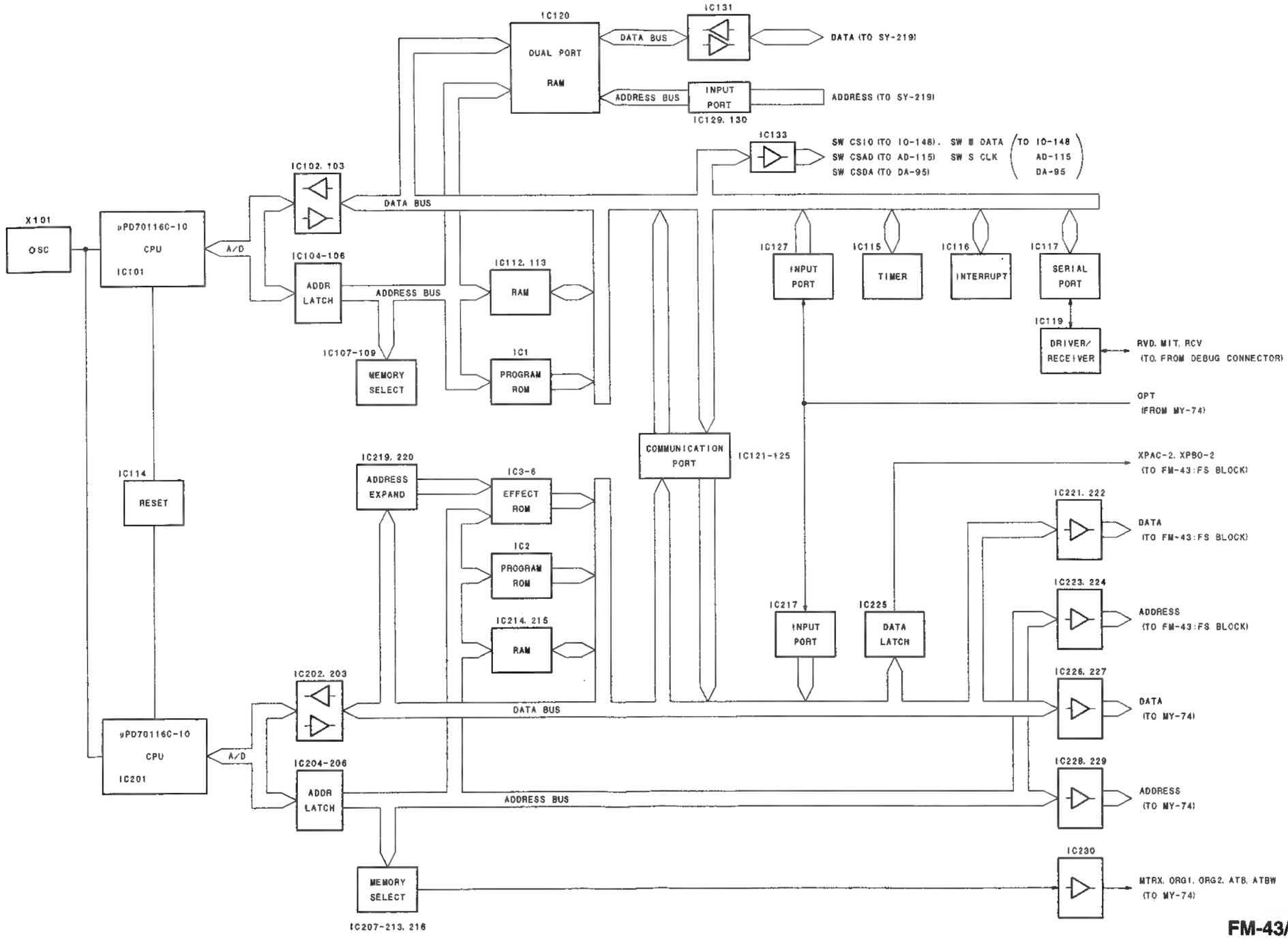

FM-43/43A (1/2)
MODEL ESBK-7021
B-ESBK7021-FM43/A-CPU-BLOCK

ESBK-7021

FM-43/43A (2/2) : FRAME

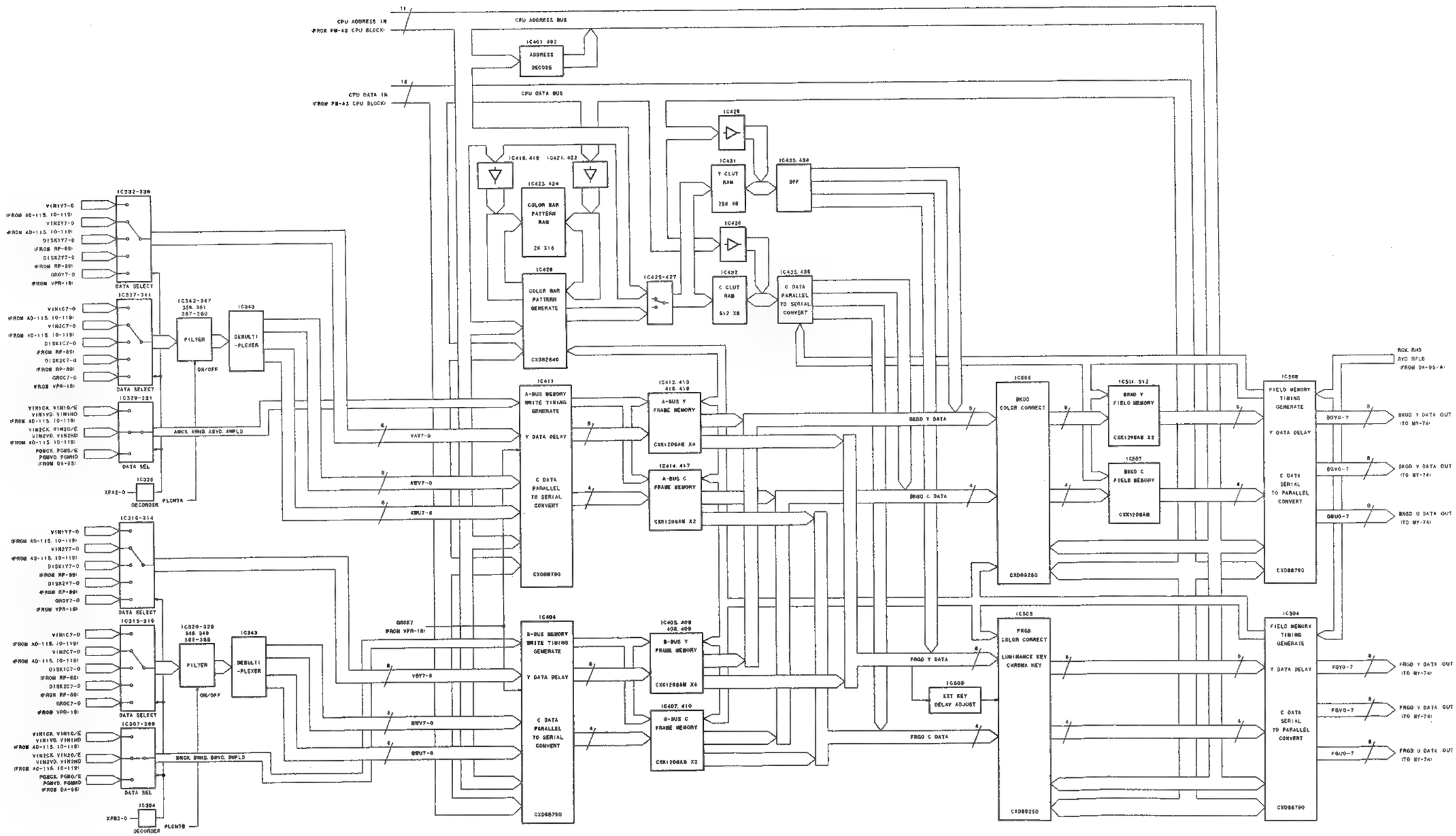

FM-43/43A (2/2)
MODEL ESBK-7021
B-ESBK7021-FM43/A-FRAME-BLOCK

MY-74 : MEMORY

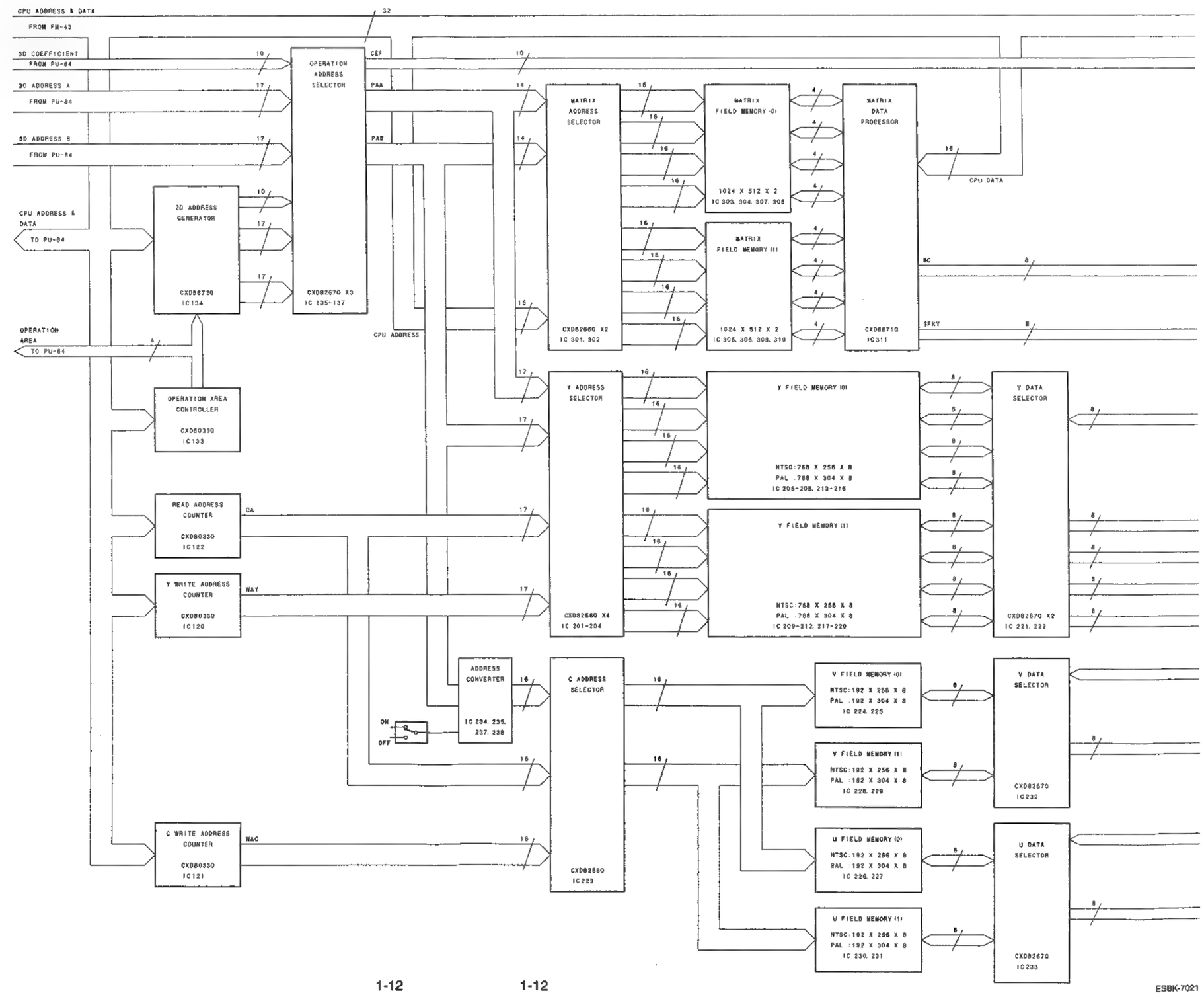

ESBK-7021

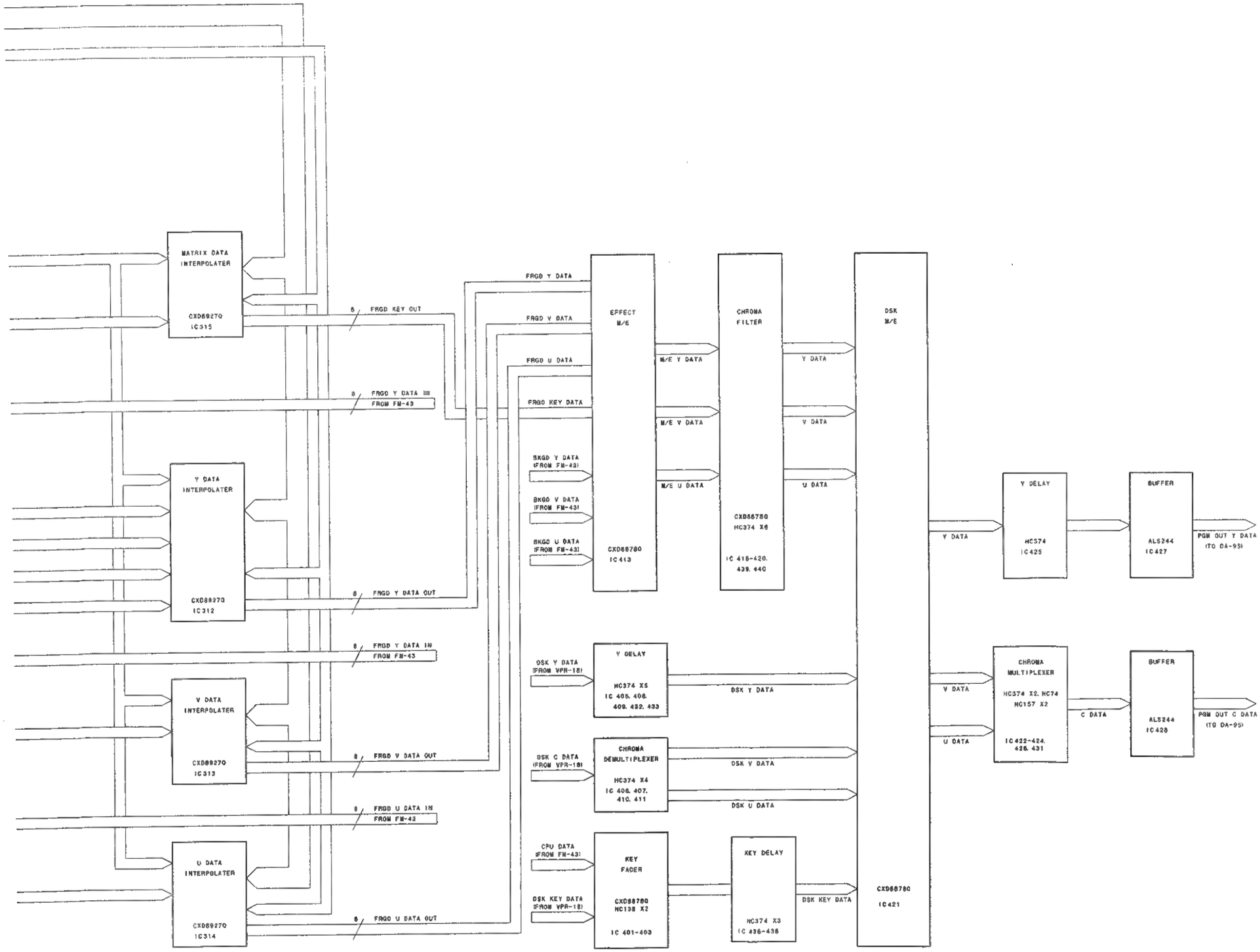

MY-74
MODEL ESBK-7021
B-ESBK7021-MY74-BLOCK

PU-84A : 3D EFFECT

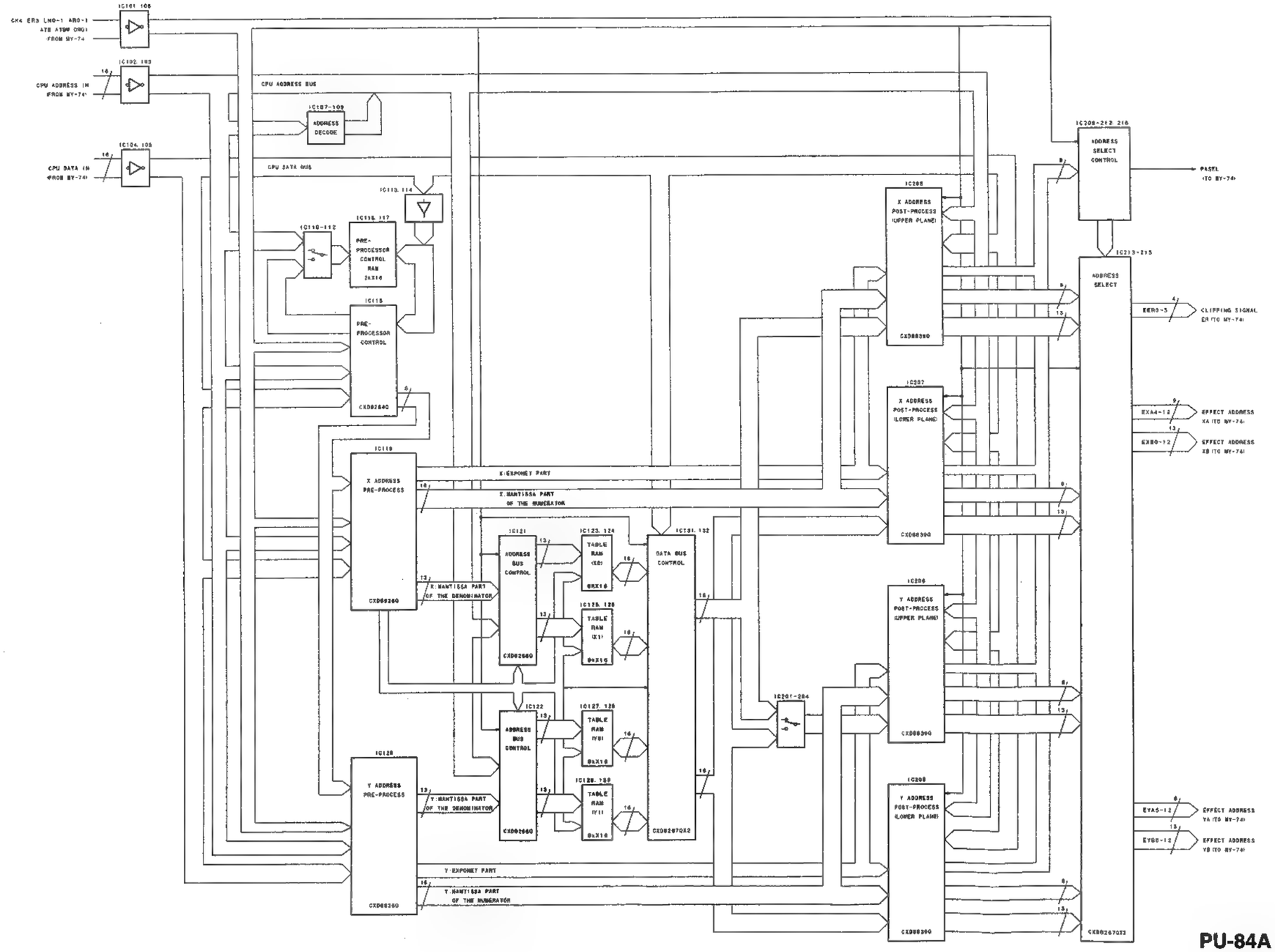

PU-84A
MODEL ESBK-7022

FM-44/44A (1/2) : CPU

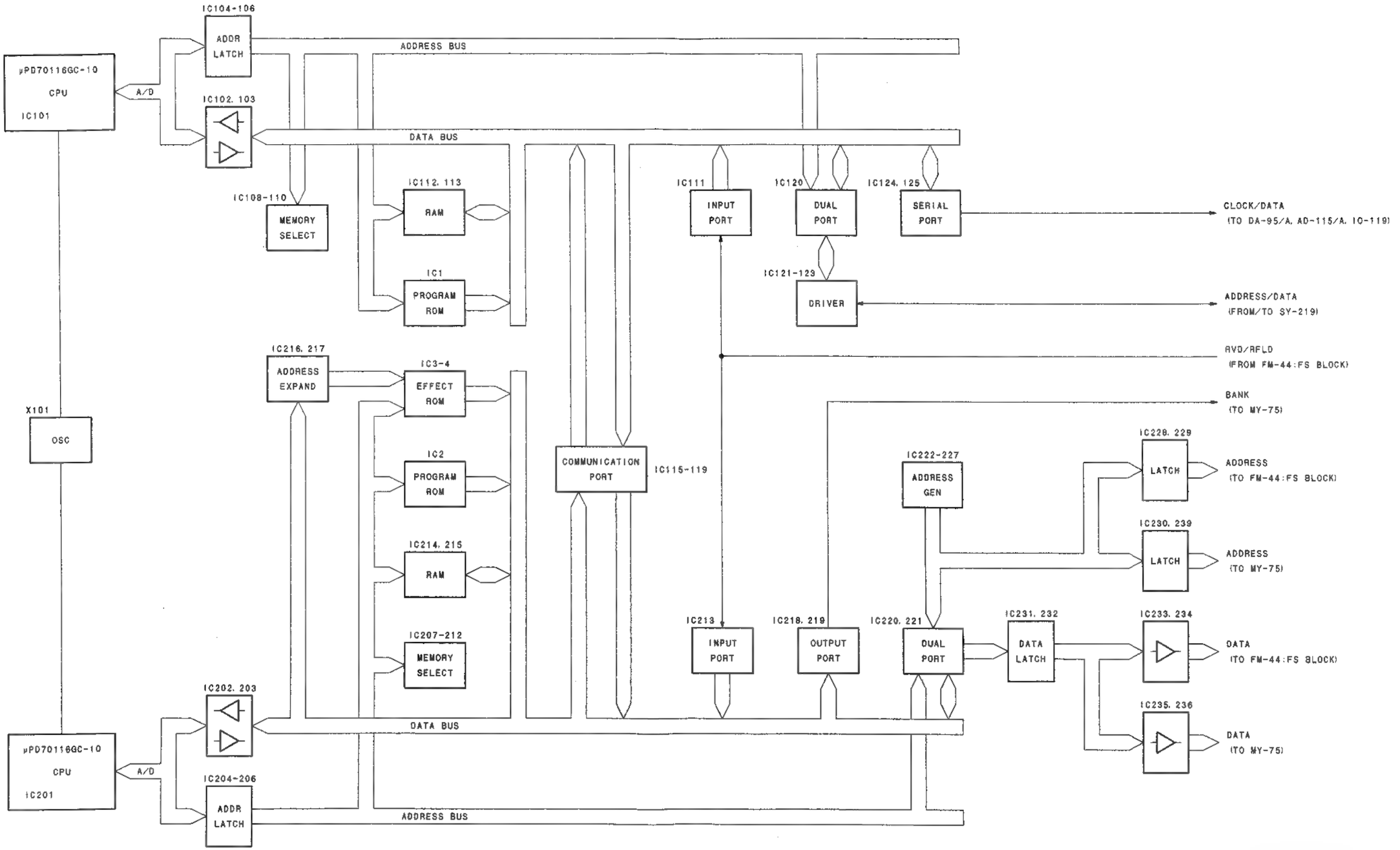

FM-44/44A (1/2)
MODEL ESBK-7023
B-ESBK7023-FM44-BLOCK

FM-44/44A (2/2) : SWITCHER

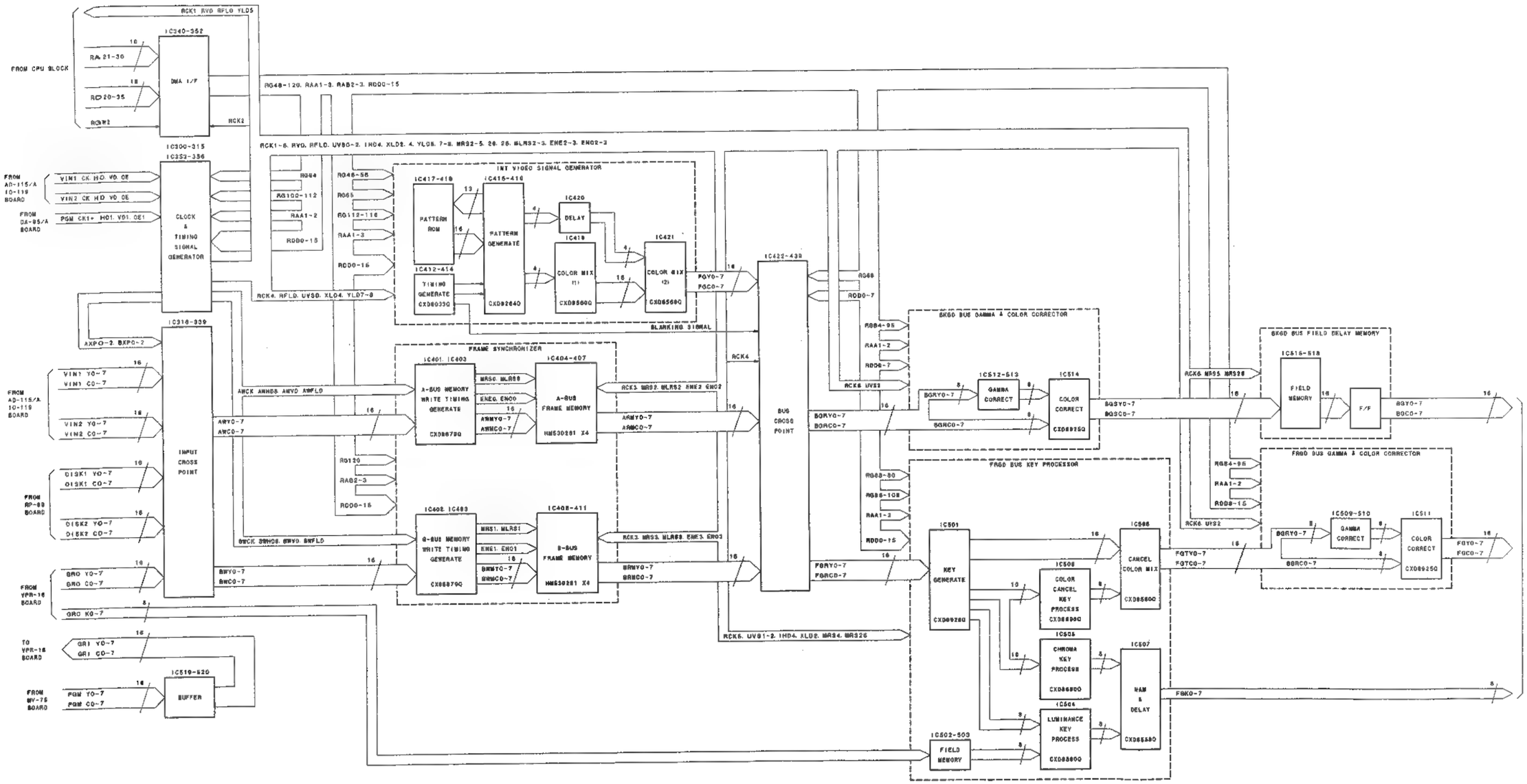

FM-44/44A (2/2)
MODEL ESBK-7023
B-ESBK7023-FM44-BLOCK

MY-75 : MEMORY

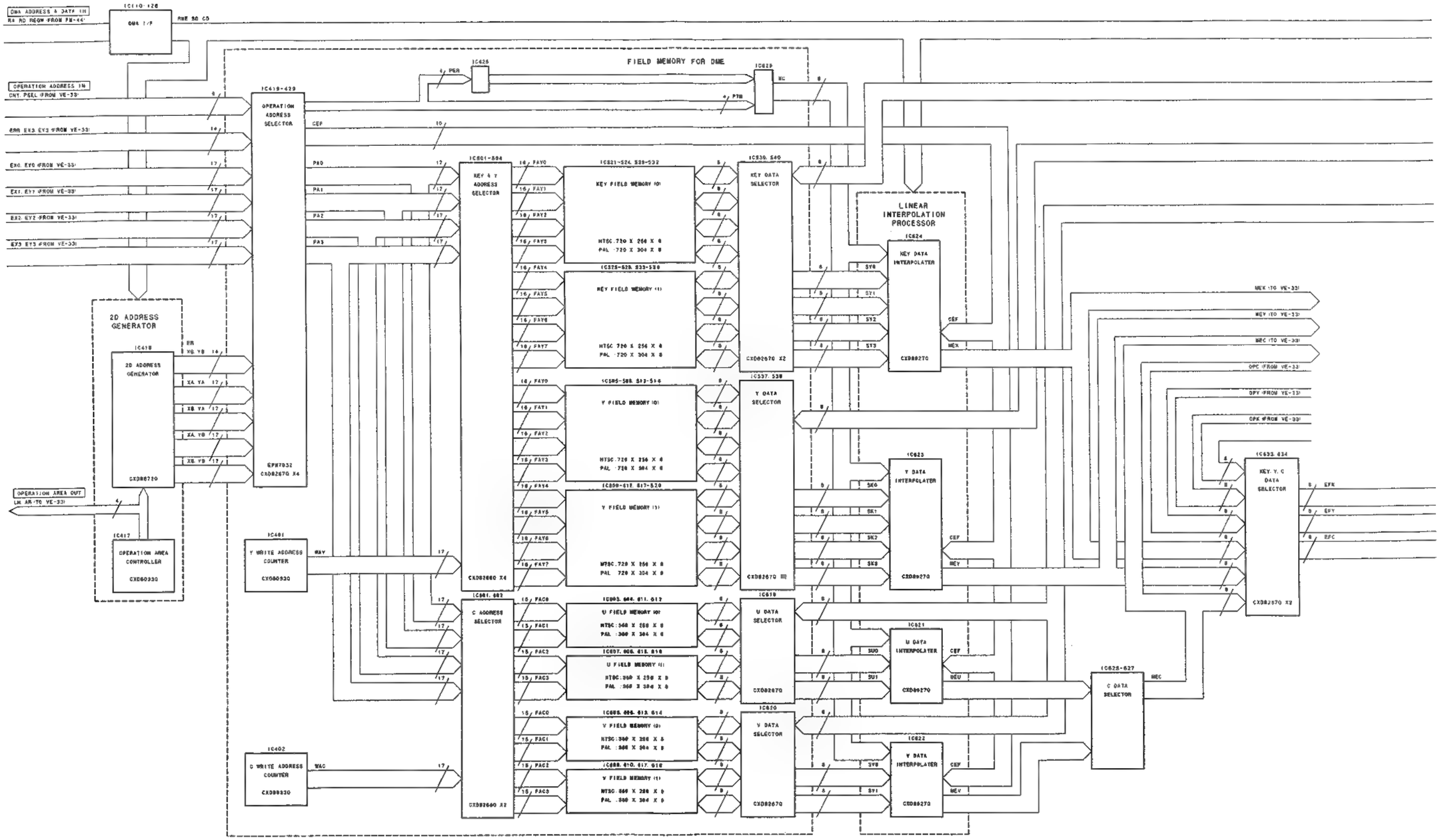
FIELD MEMORY FOR DME
OPERATION ADDRESS SELECTOR
KEY & Y ADDRESS SELECTOR
KEY FIELD MEMORY (0)
KEY FIELD MEMORY (1)
KEY DATA SELECTOR
LINEAR INTERPOLATION PROCESSOR
KEY DATA INTERPOLATER
2D ADDRESS GENERATOR
Y FIELD MEMORY (0)
Y FIELD MEMORY (1)
Y DATA SELECTOR
Y DATA INTERPOLATER
KEY, Y, C DATA SELECTOR
C ADDRESS SELECTOR
U FIELD MEMORY (0)
U FIELD MEMORY (1)
U DATA SELECTOR
U DATA INTERPOLATER
V FIELD MEMORY (0)
V FIELD MEMORY (1)
V DATA SELECTOR
V DATA INTERPOLATER
C DATA SELECTOR
Y WRITE ADDRESS COUNTER
C WRITE ADDRESS COUNTER
OPERATION AREA CONTROLLER
OPERATION AREA OUT
MEK (TO VE-33)
MEY (TO VE-33)
MEC (TO VE-33)
OPC (FROM VE-33)
OPY (FROM VE-33)
OPK (FROM VE-33)
EFK
EFY
EFC

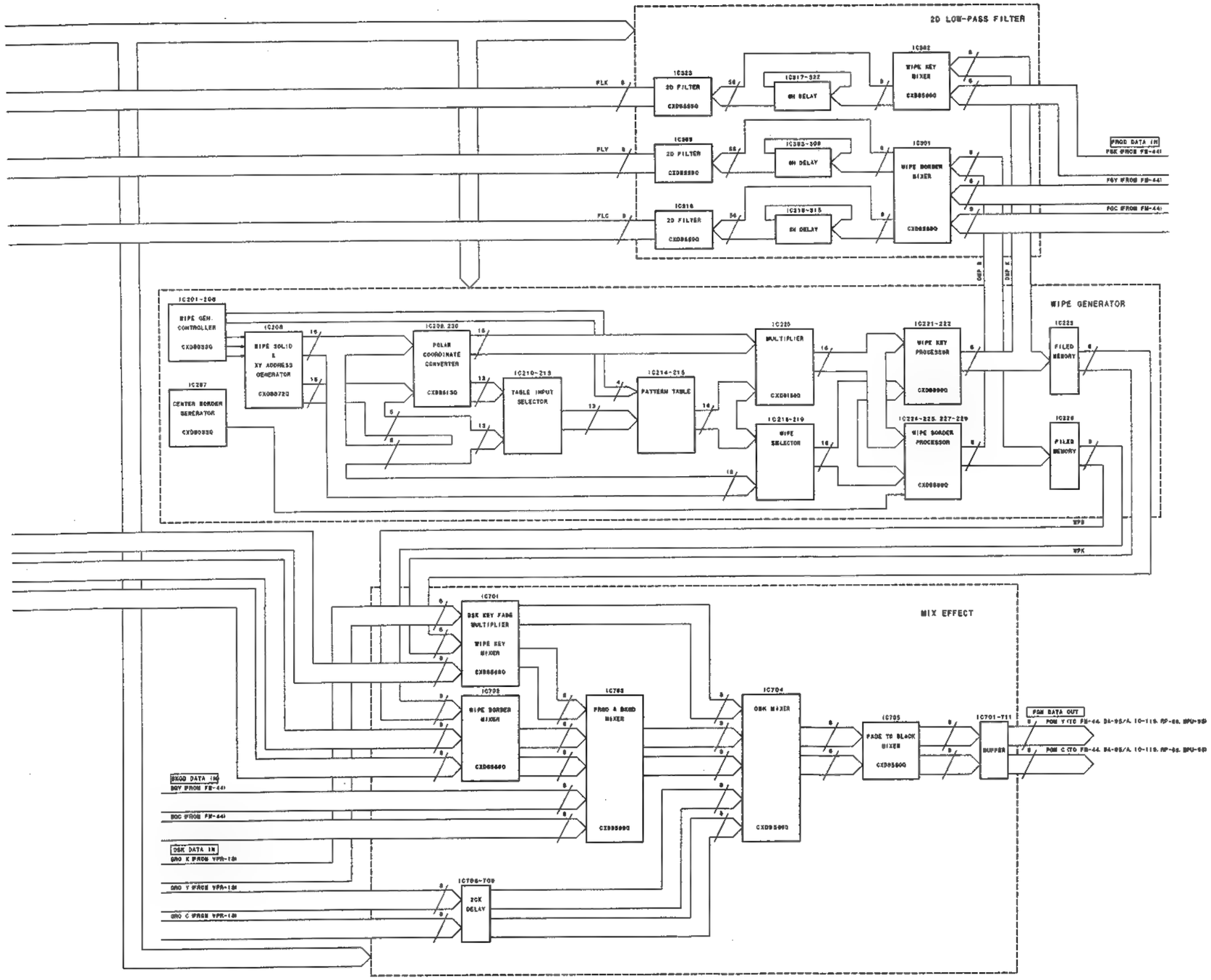

MY-75
MODEL ESBK-7023
B-ESBK7023-MY75-BLOCK

VE-33/33A (1/3) : ADDRESS GEN

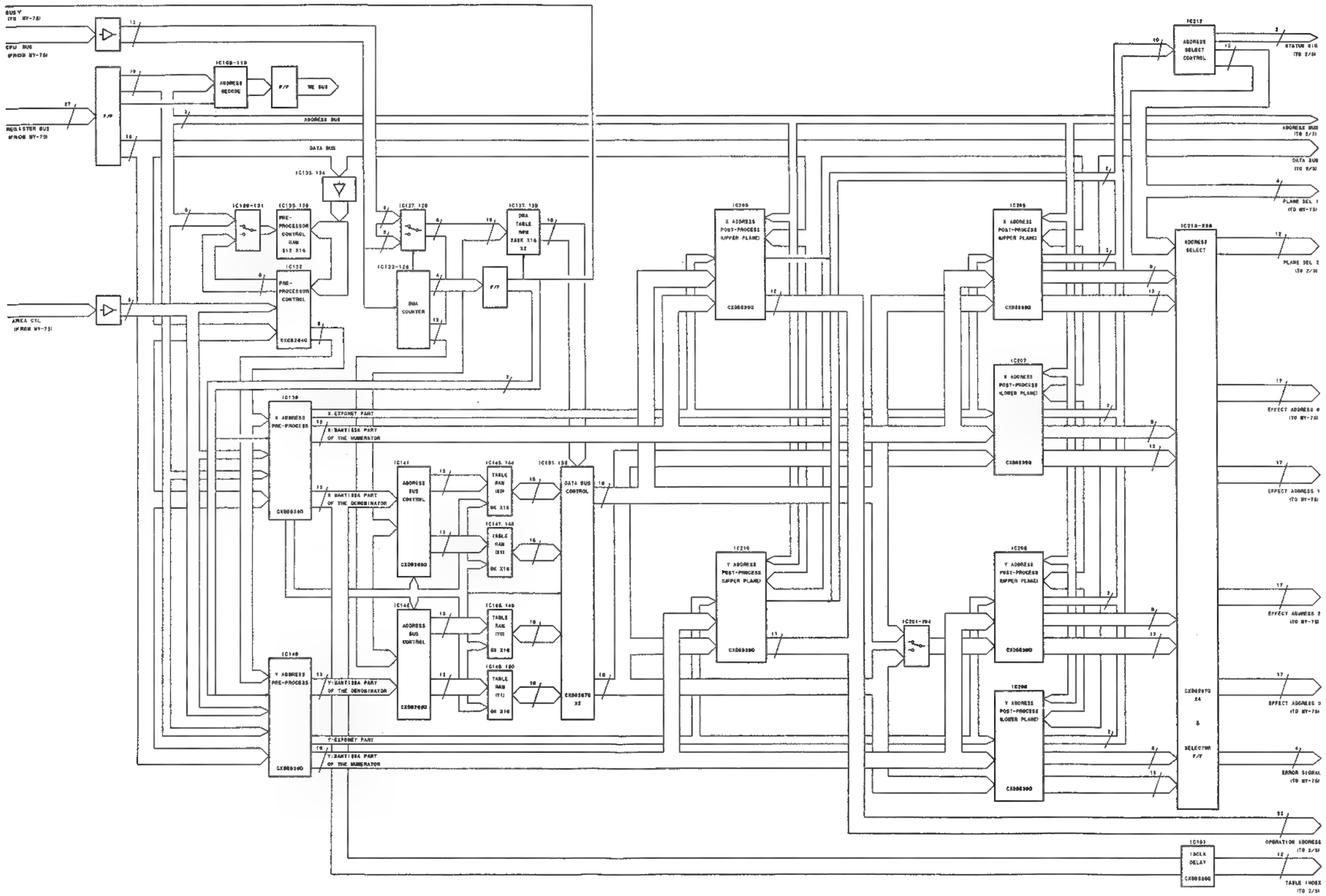

VE-33/33A (1/3)
MODEL ESBK-7024
B-ESBK7024-VE33-BLOCK

VE-33/33A (2/3) : LIGHTING

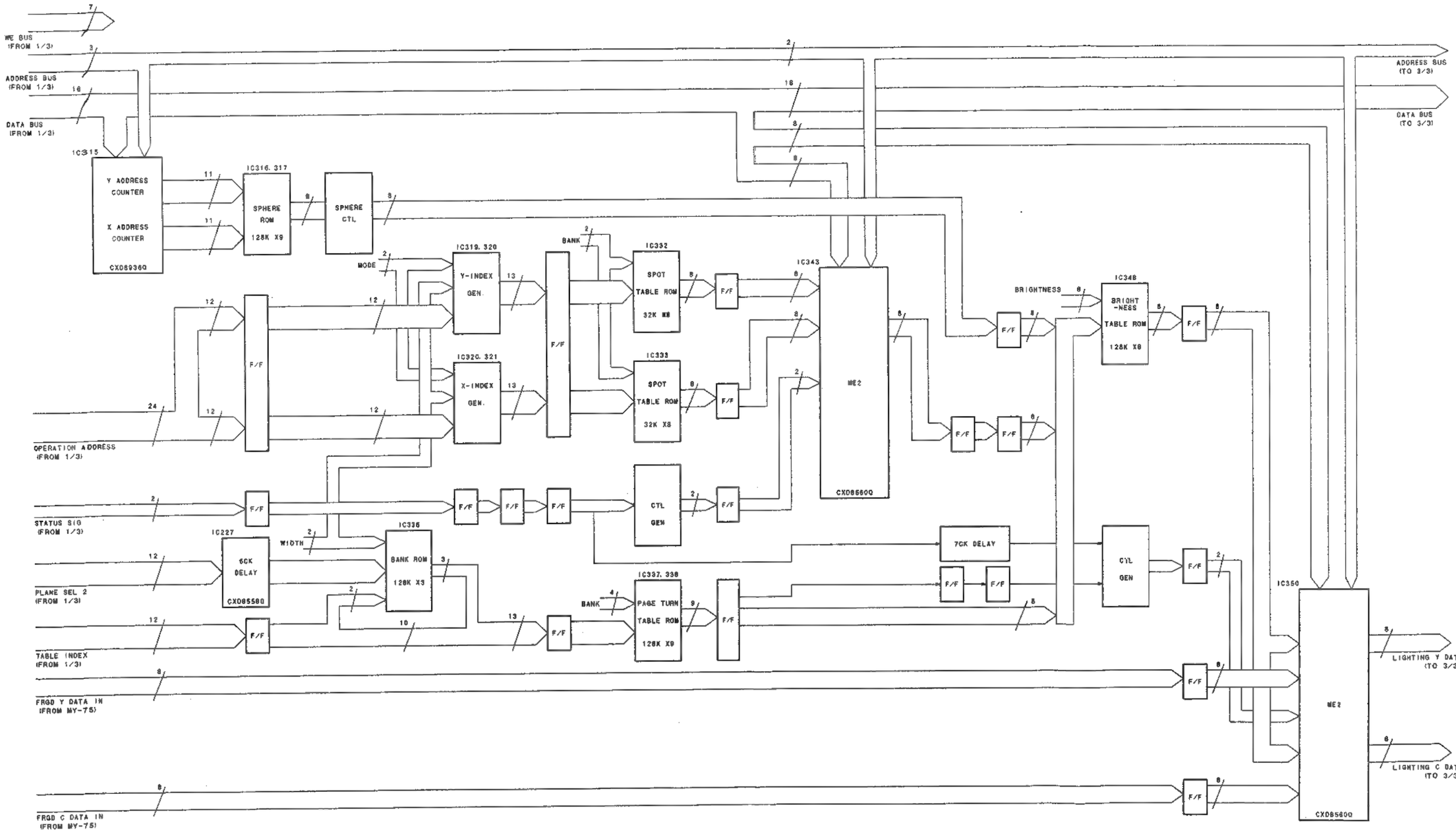

VE-33/33A (2/3)
MODEL ESBK-7024
B-ESBK7024-VE33-BLOCK

VE-33/33A (3/3) : TRAIL

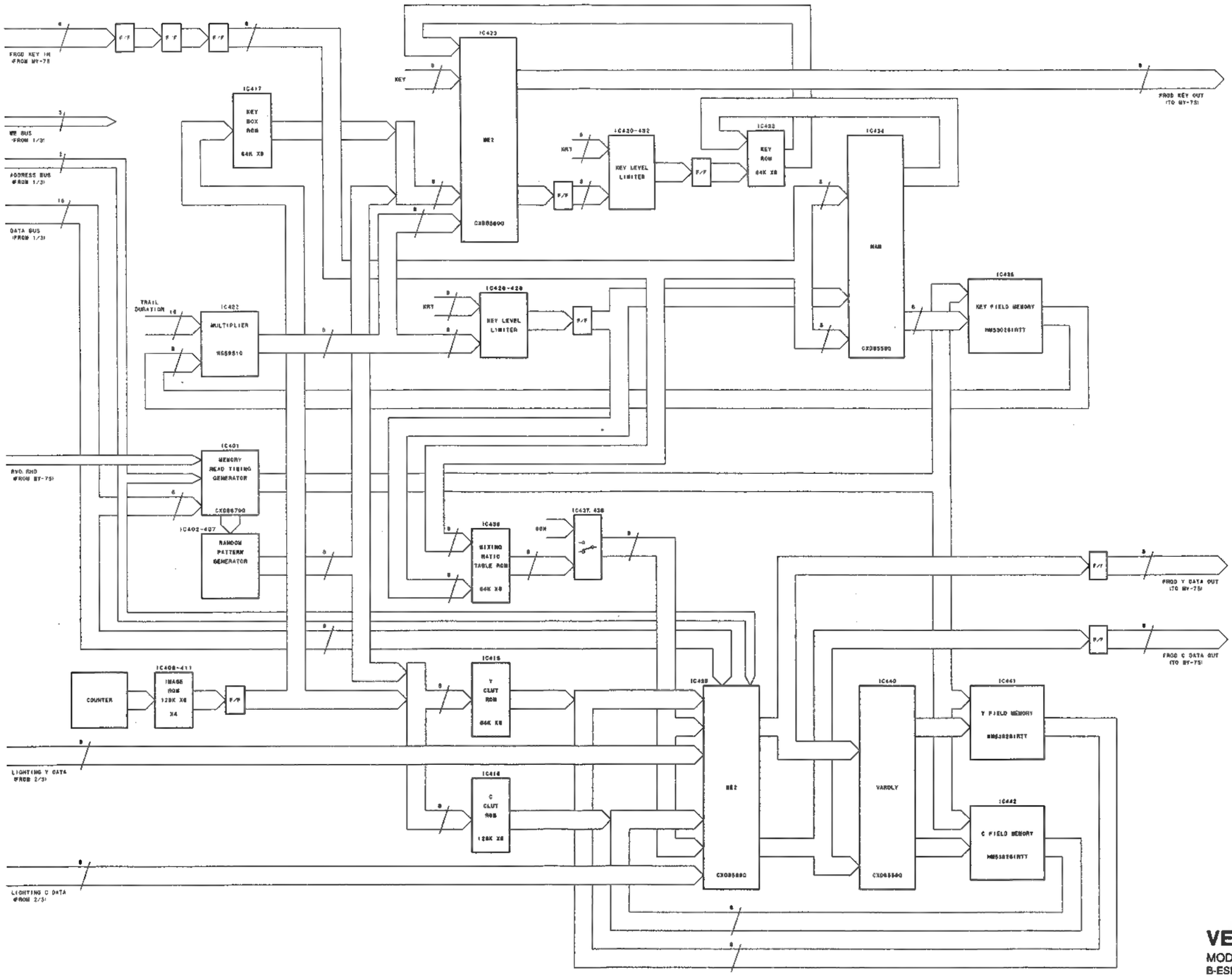

VE-33/33A (3/3)
MODEL ESBK-7024
B-ESBK7024-VE33-BLOCK

DAC-20/20A : MONITOR

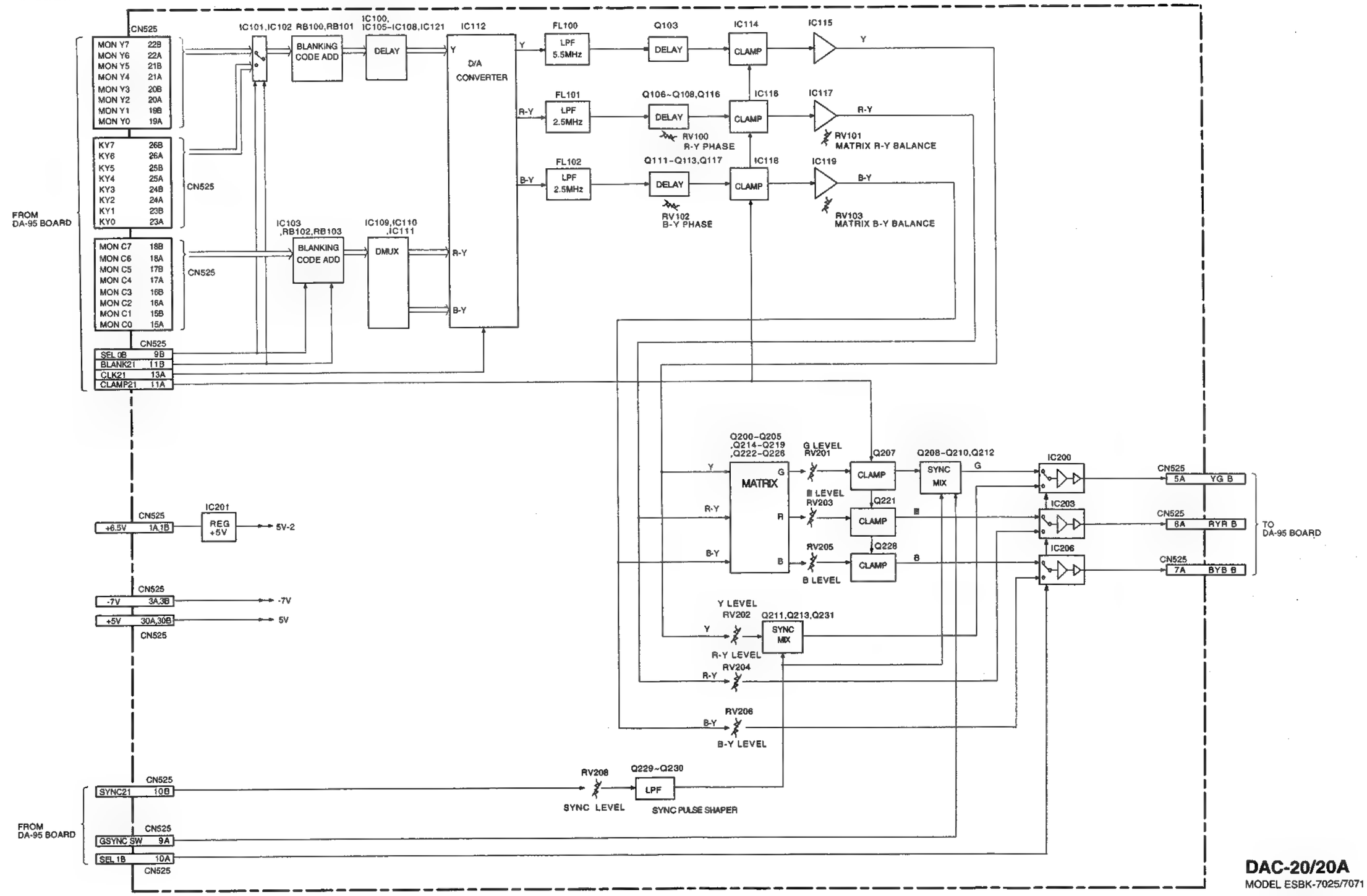

DAC-20/20A
MODEL ESBK-7025/7071

IO-119 : QSDI I/F
IO-148 : SDI I/F

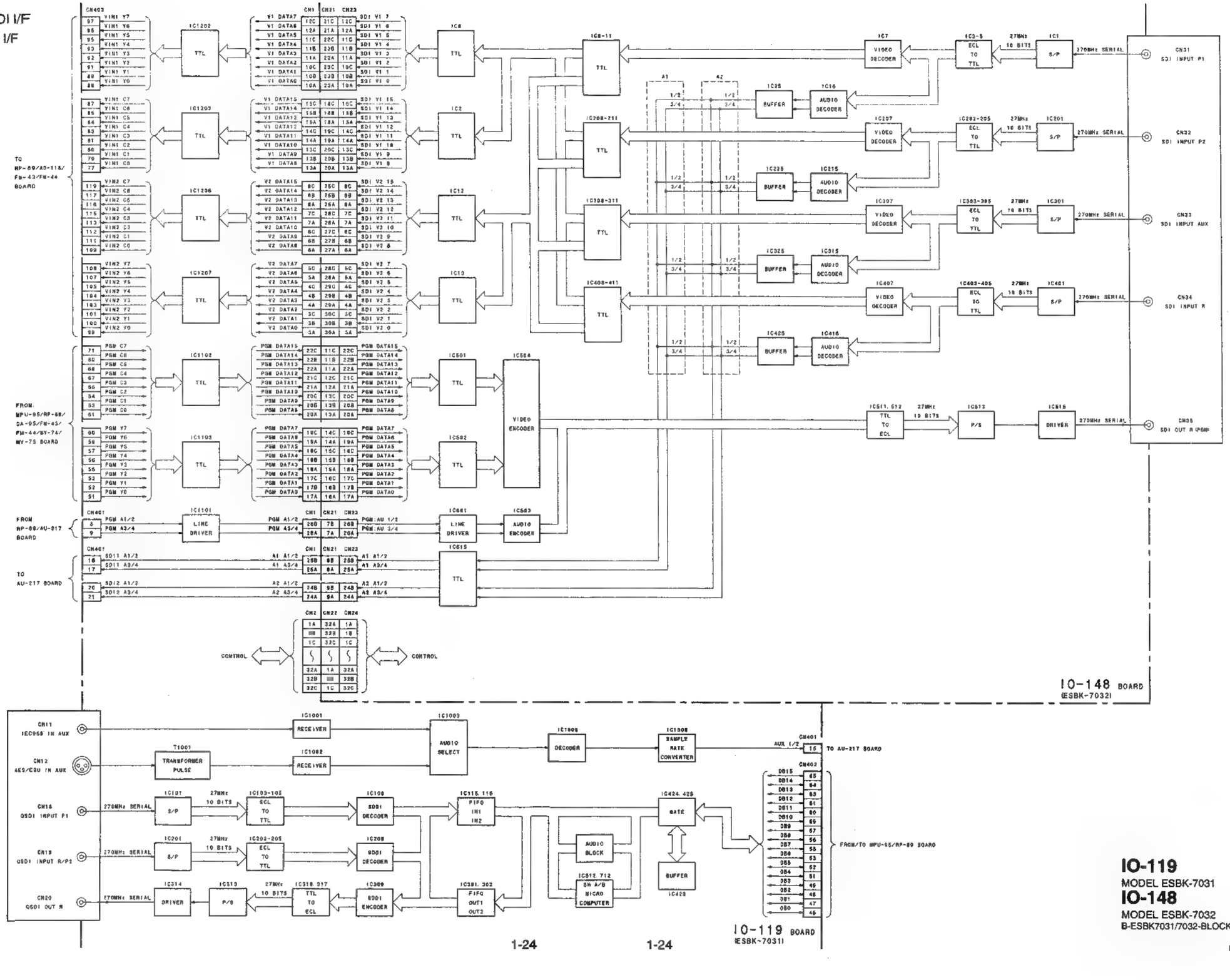

IO-119
MODEL ESBK-7031
IO-148
MODEL ESBK-7032
B-ESBK7031/7032-BLOCK

MPU-95 : DISK UNIT CONTROL

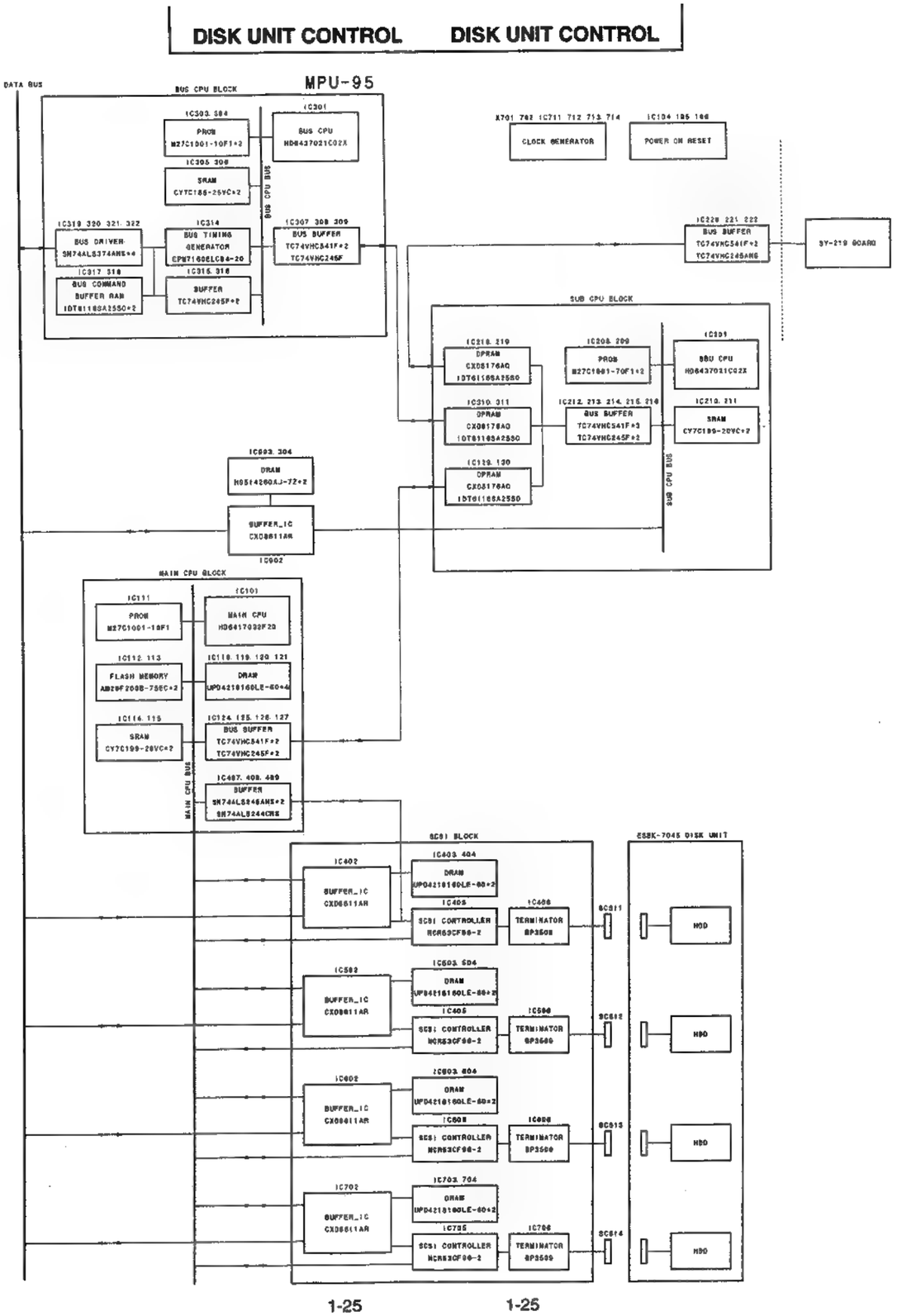

MPU-95
MODEL ESBK-7041
B-ESBK7041-MPU95-BLOCK

RP-89/89A (1/2) : AUDIO

DISK RECORDER AUDIO BLOCK

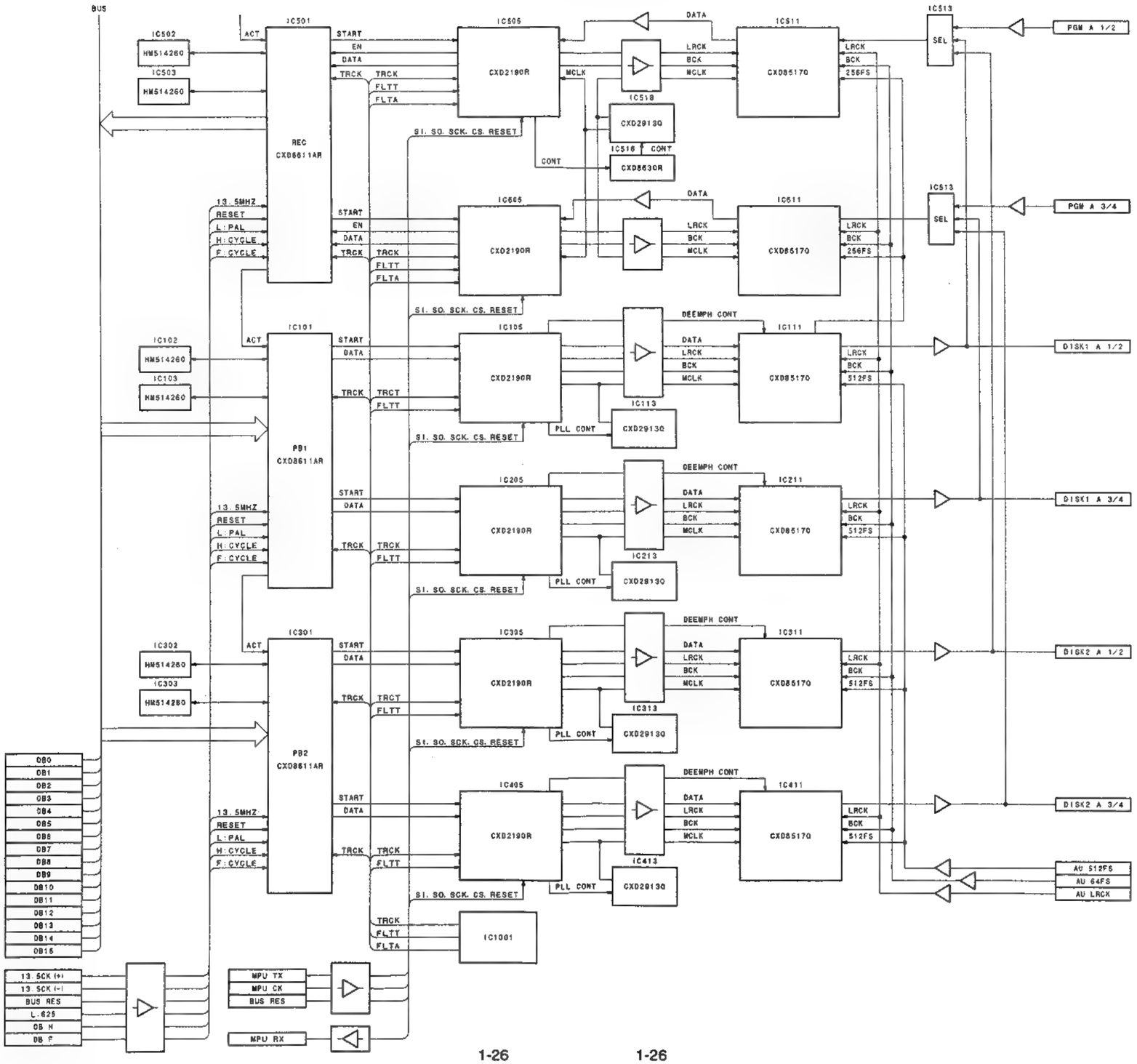

RP-89/89A (1/2)
MODEL ESBK-7041
B-ESBK7041-RP89-BLOCK-AUDIO

ESBK-7041

RP-89/89A (2/2) : VIDEO

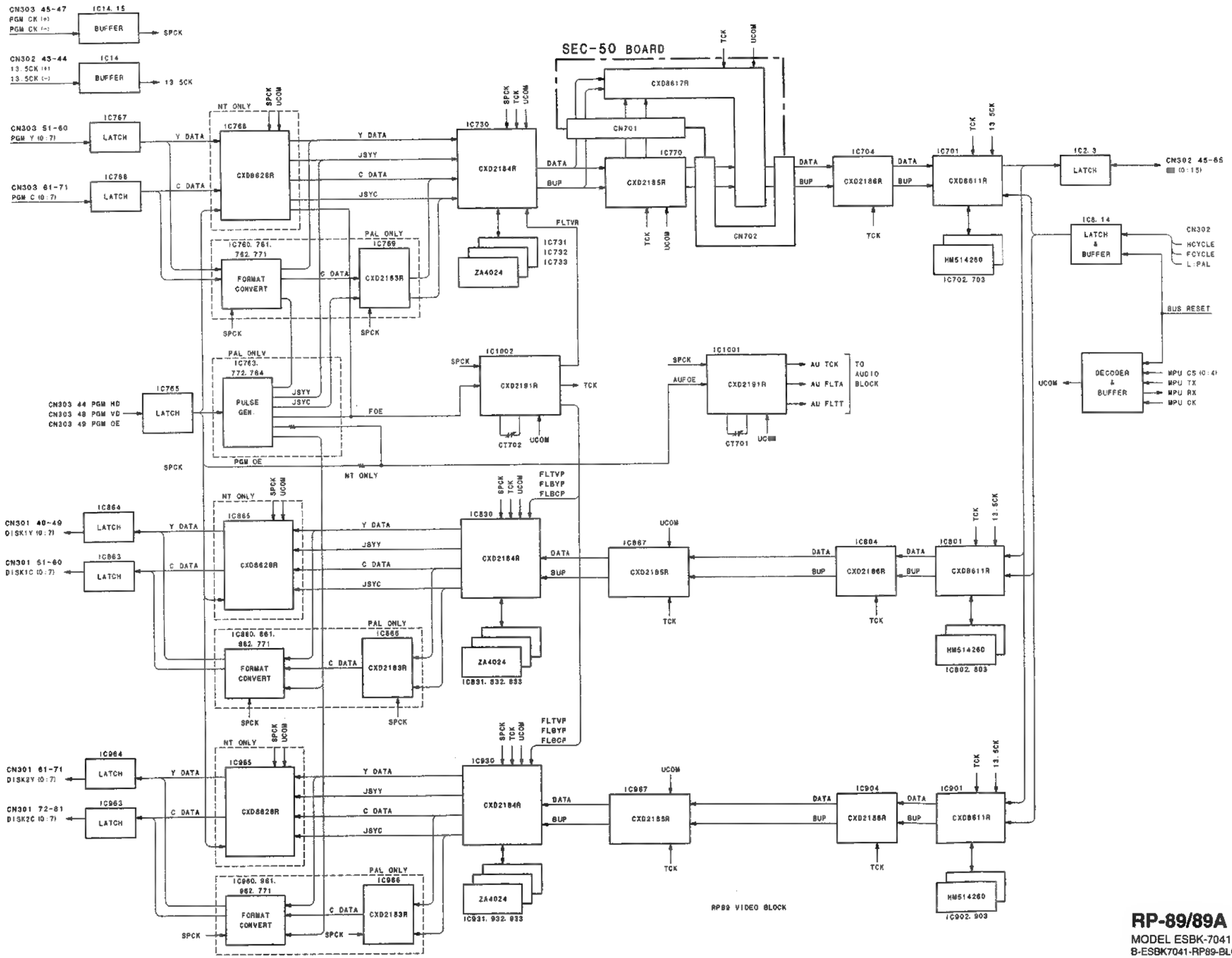

RP-89/89A (2/2)
MODEL ESBK-7041
8-ESBK7041-RP89-BLOCK-VIDEO

SECTION 2
SCHEMATIC DIAGRAMS

ES-7 ; EDIT STATION

BOARD NAME	CIRCUIT FUNCTION	PAGE
AU-217	AUDIO MIXER BOARD	2-2
SY-219	SYSTEM CONTROL BOARD	2-25
VPR-18	VIDEO I/O BOARD	2-30
DSC-75/75A	VRAM BOARD	2-34
BF-54	BUFFER BOARD	2-37
RE-122/122A	POWER SUPPLY BOARD	2-38
AD-115/115A	A/D BOARD (VIDEO INPUT)	2-40
DA-95/95A	D/A BOARD (VIDEO OUTPUT)	2-59

ESBK-7021 ; BASIC DME SWITCHER BOARD

BOARD NAME	CIRCUIT FUNCTION	PAGE
FM-43/43A	SWITCHER CONTROL & FRAME SYNCHRONIZER BOARD	2-72
MY-74	MEMORY BOARD	2-82

ESBK-7022 ; 3D EFFECT BOARD FOR BASIC DME SWITCHER

BOARD NAME	CIRCUIT FUNCTION	PAGE
PU-84A	3D EFFECT BOARD	2-90

ESBK-7023 ; ADVANCED DME SWITCHER BOARD

BOARD NAME	CIRCUIT FUNCTION	PAGE
FM-44/44A	SWITCHER CONTROL & FRAME SYNCHRONIZER BOARD	2-94
MY-75	MEMORY BOARD	2-104

ESBK-7024 ; 3D EFFECT BOARD FOR ADVANCED DME SWITCHER

BOARD NAME	CIRCUIT FUNCTION	PAGE
VE-33/33A	3D EFFECT BOARD	2-118

ESBK-7025 ; EXTERNAL SWITCHER BOARD

BOARD NAME	CIRCUIT FUNCTION	PAGE
IF-547/547A	(To be issued as supplement)	—
DAC-20/20A	MONITOR BOARD	2-126

ESBK-7031 ; QSDI INTERFACE BOARD

BOARD NAME	CIRCUIT FUNCTION	PAGE
IO-119	QSDI I/F BOARD	2-132

ESBK-7032 ; SDI INTERFACE BOARD

BOARD NAME	CIRCUIT FUNCTION	PAGE
IO-148	SDI I/F BOARD	2-154

ESBK-7041 ; DISK RECORDER BOARD

BOARD NAME	CIRCUIT FUNCTION	PAGE
MPU-95	DISK UNIT CONTROL BOARD	2-170
RP-89/89A	REC/PLAY BOARD	2-188

ESBK-7071 ; ESDRAW

BOARD NAME	CIRCUIT FUNCTION	PAGE
DAC-20/20A	MONITOR BOARD	2-126

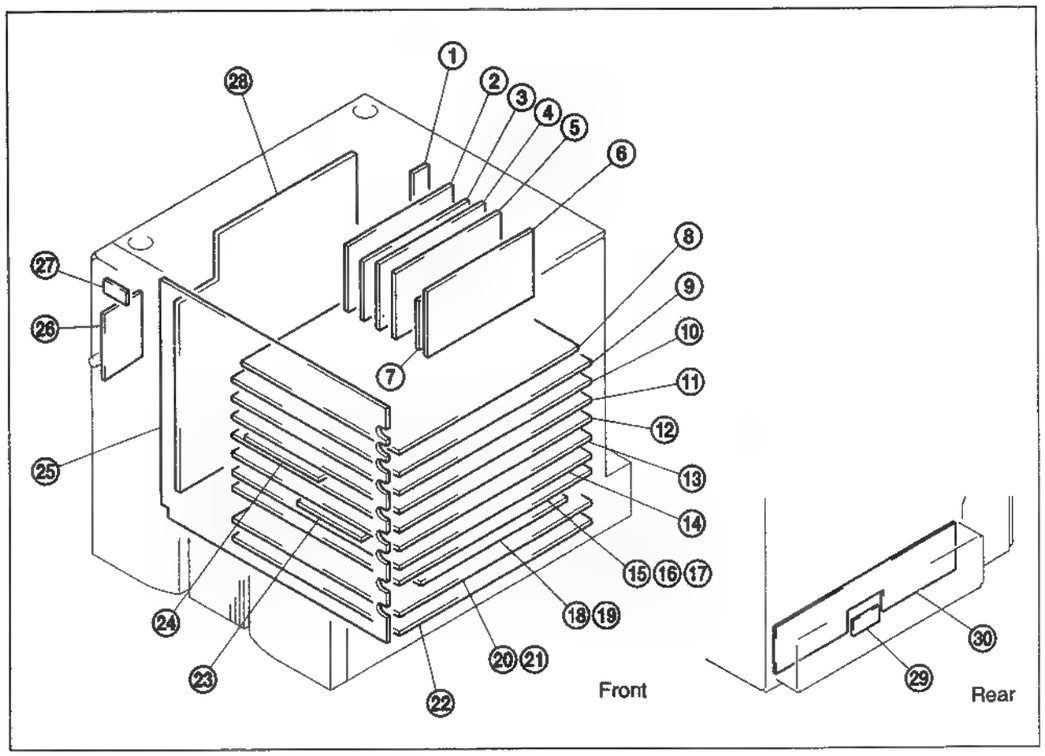

① CN-1242
② SCSI (ESBK-7051)] See Frame Wiring
③ E.TM (ESBK-7052)]
④ BF-54
⑤ VGA Board
⑥ VPR-18
⑦ DSC-75/75A
⑧ PC Main Board (P/I-P55TP4XE) : See Frame Wiring
⑨ SY-219
⑩ MPU-95 (ESBK-7041)
⑪ RP-89/89A (ESBK-7041)
⑫ IO-119 (ESBK-7031)
⑬ AD-115/115A
⑭ DA-95/95A
⑮ FM-43/43A (ESBK-7021)
⑯ FM-44/44A (ESBK-7023)
⑰ IF-547/547A (ESBK-7025)
⑱ PU-84A (ESBK-7022)
⑲ VE-33/33A (ESBK-7024)
⑳ MY-74 (ESBK-7021)
㉑ MY-75 (ESBK-7023)
㉒ AU-217
㉓ DAC-20/20A (ESBK-7025/7071)
㉔ IO-148 (ESBK-7032)
㉕ MB-639]
㉖ FP-74] See Frame Wiring
㉗ LE-154]
㉘ RE-122/122A
㉙ CN-1238] See Frame Wiring
㉚ CN-1237]

2-1

CPU-BLOCK

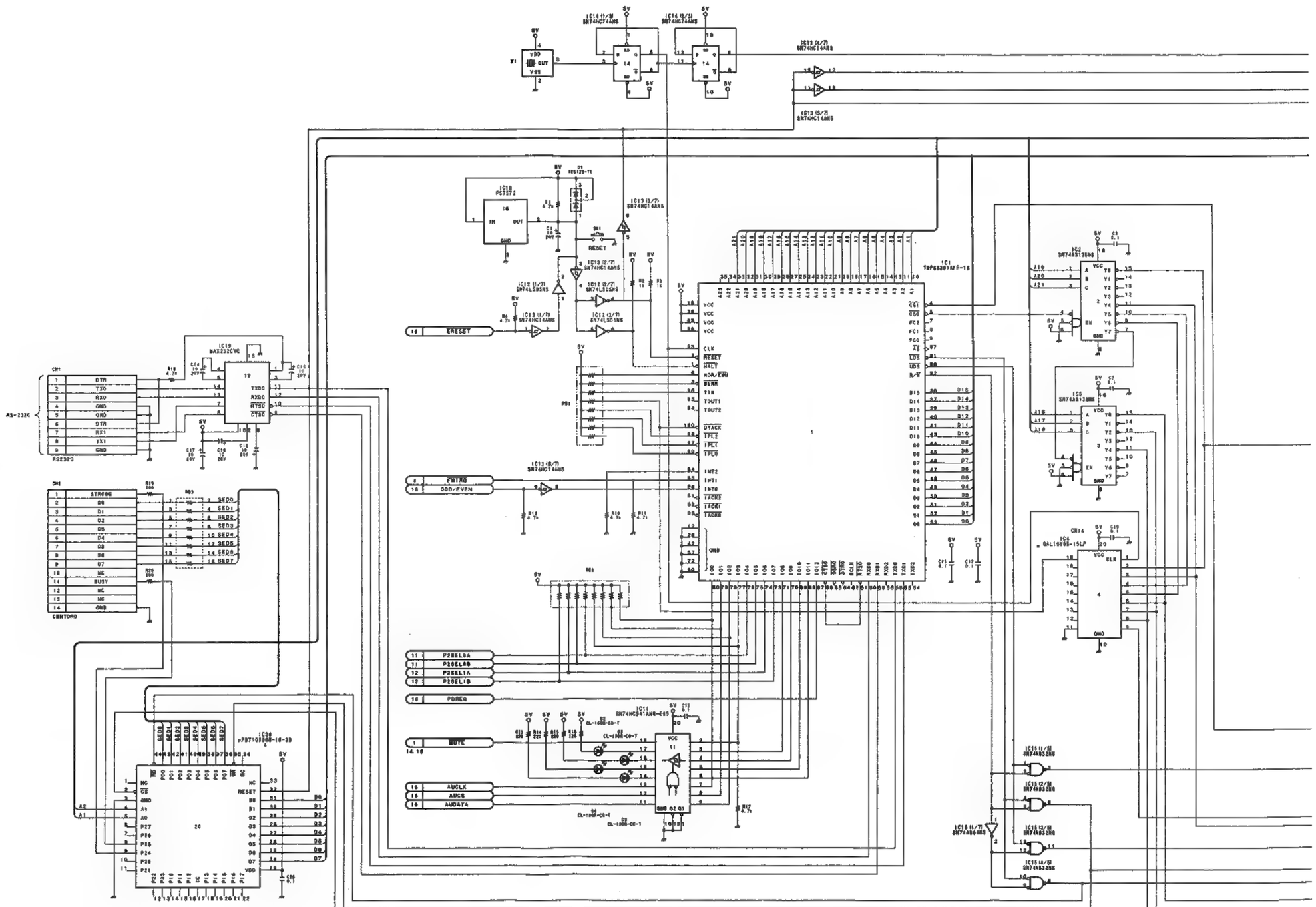

2-2 2-2

ES-7

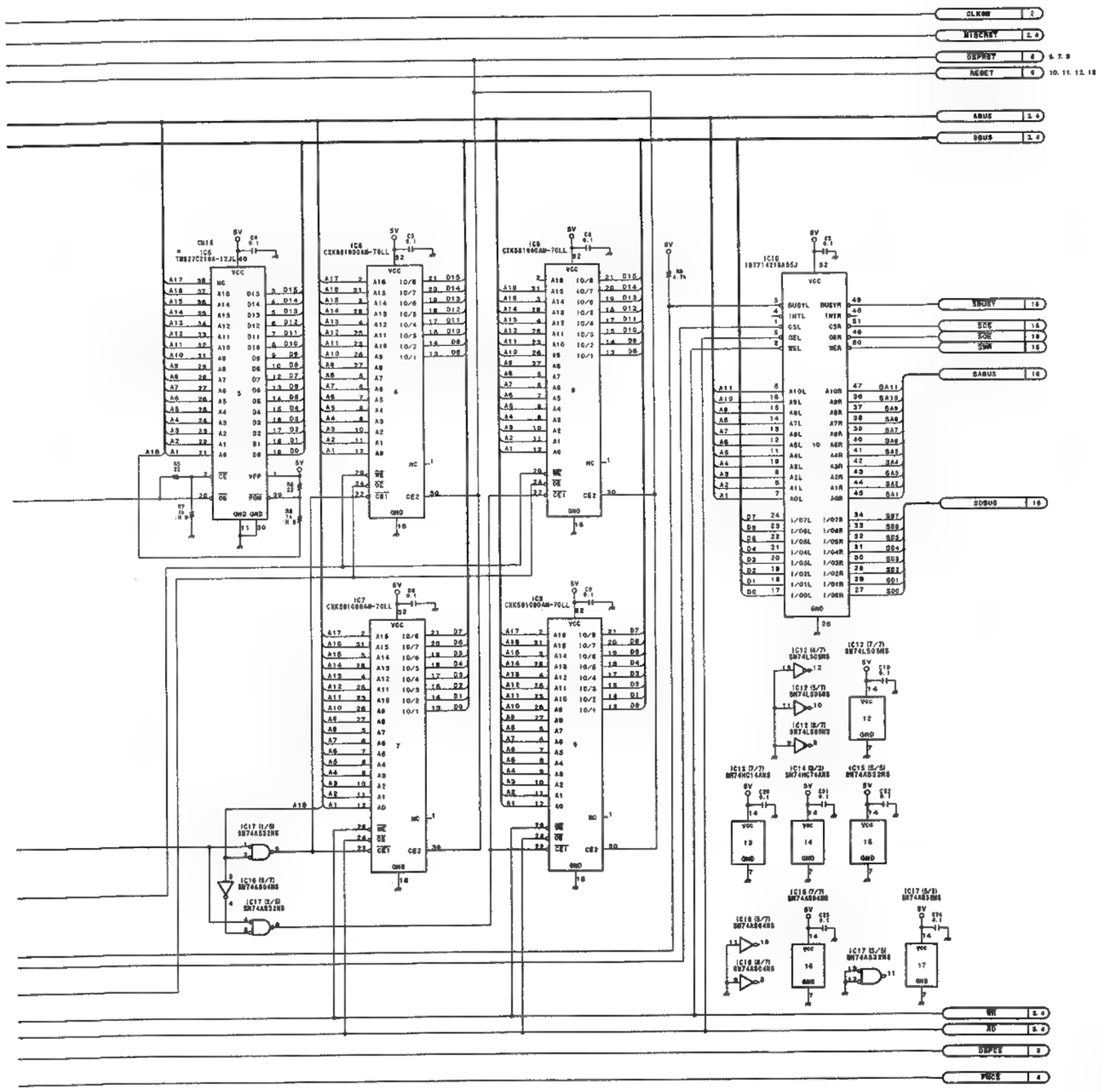

AU-217 (1/16)
PART NO 1-661-347-11
MODEL ES-7
B-ES7-AU217-11-M

PLL BLOCK

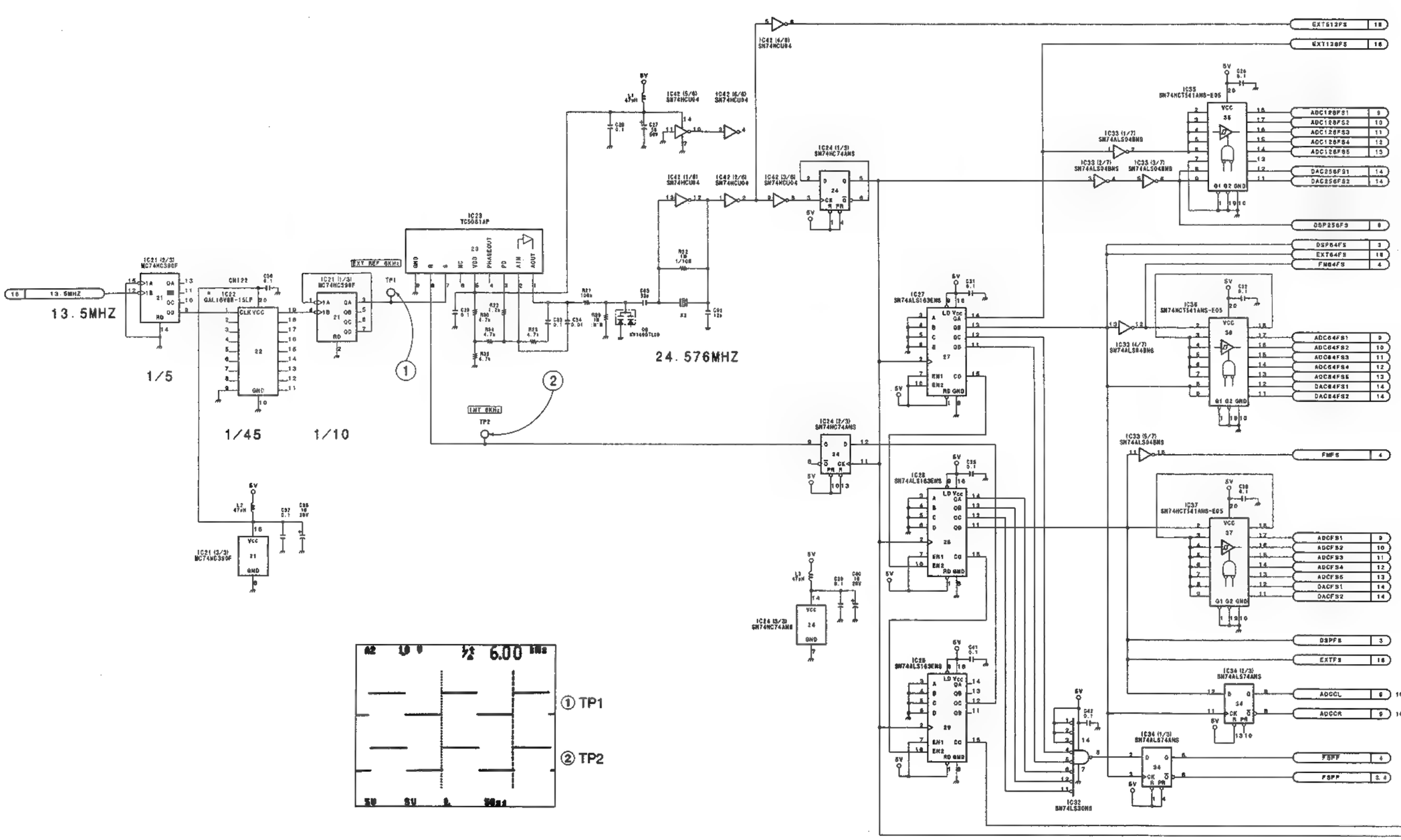
13.5MHZ
1/5
1/45
1/10
24.576MHZ
EXT REF 6KHz
INT 6KHz
TP1
TP2
① TP1
② TP2
6.00 ms
EXT512FS
EXT128FS
ADC128FS1
ADC128FS2
ADC128FS3
ADC128FS4
ADC128FS5
DAC256FS1
DAC256FS2
DSP256FS
DSP64FS
EXT64FS
FMG4FS
ADC64FS1
ADC64FS2
ADC64FS3
ADC64FS4
ADC64FS5
DAC64FS1
DAC64FS2
FMFS
ADCFS1
ADCFS2
ADCFS3
ADCFS4
ADCFS5
DACFS1
DACFS2
DSPFS
EXTFS
ADCCL
ADCCR
FSPF
FSPF

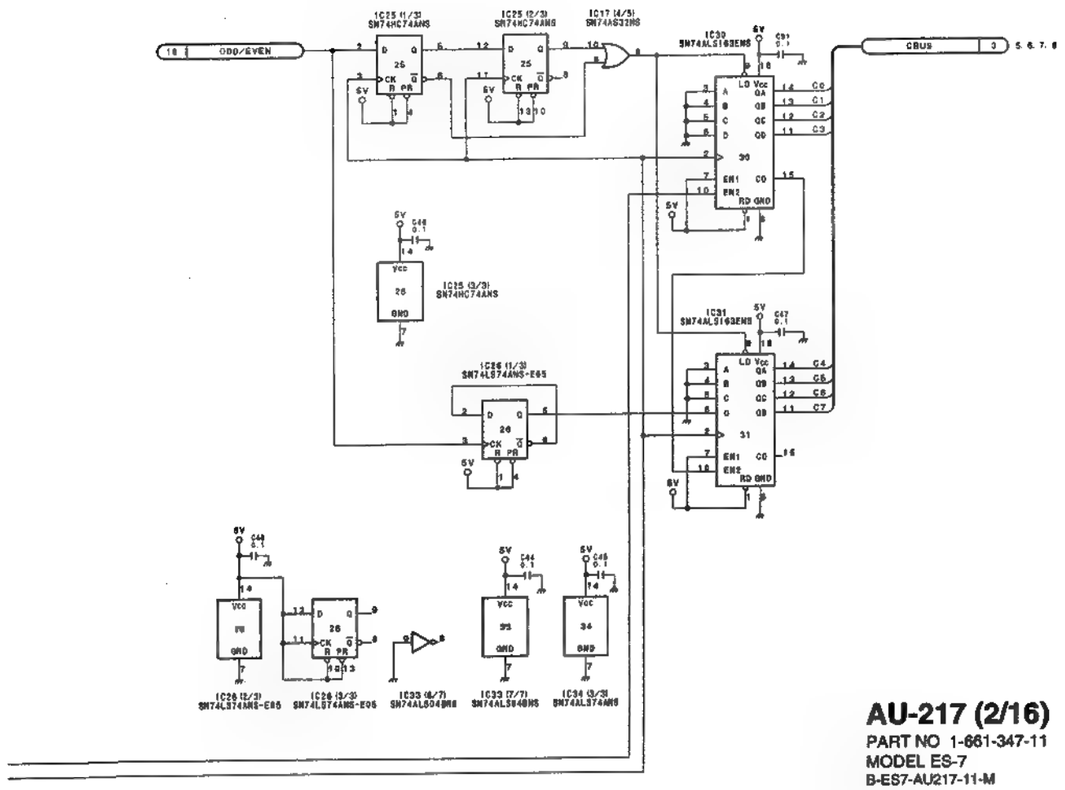

AU-217 (2/16)
PART NO 1-661-347-11
MODEL ES-7
B-ES7-AU217-11-M

DSP-CONTROLER

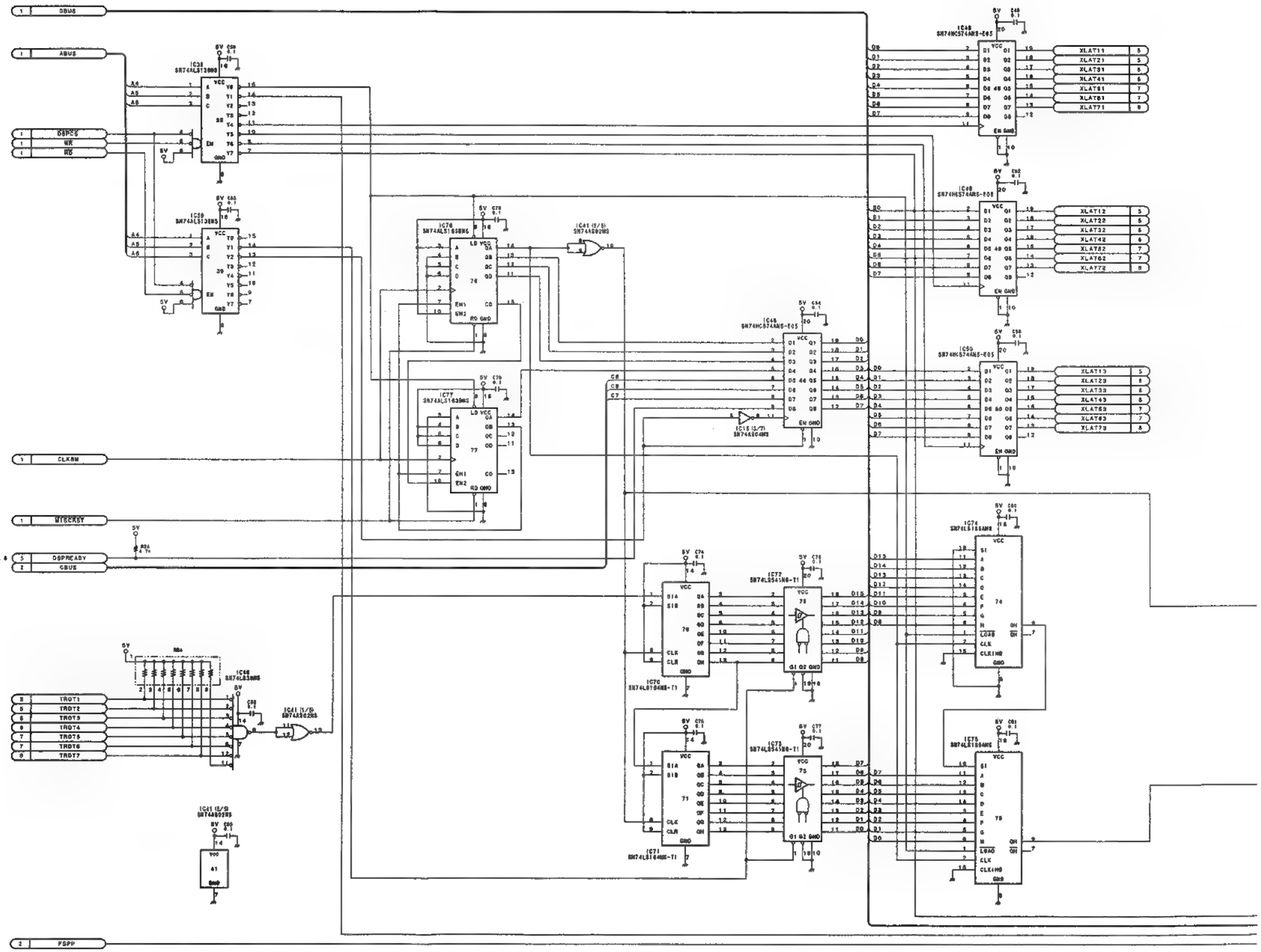

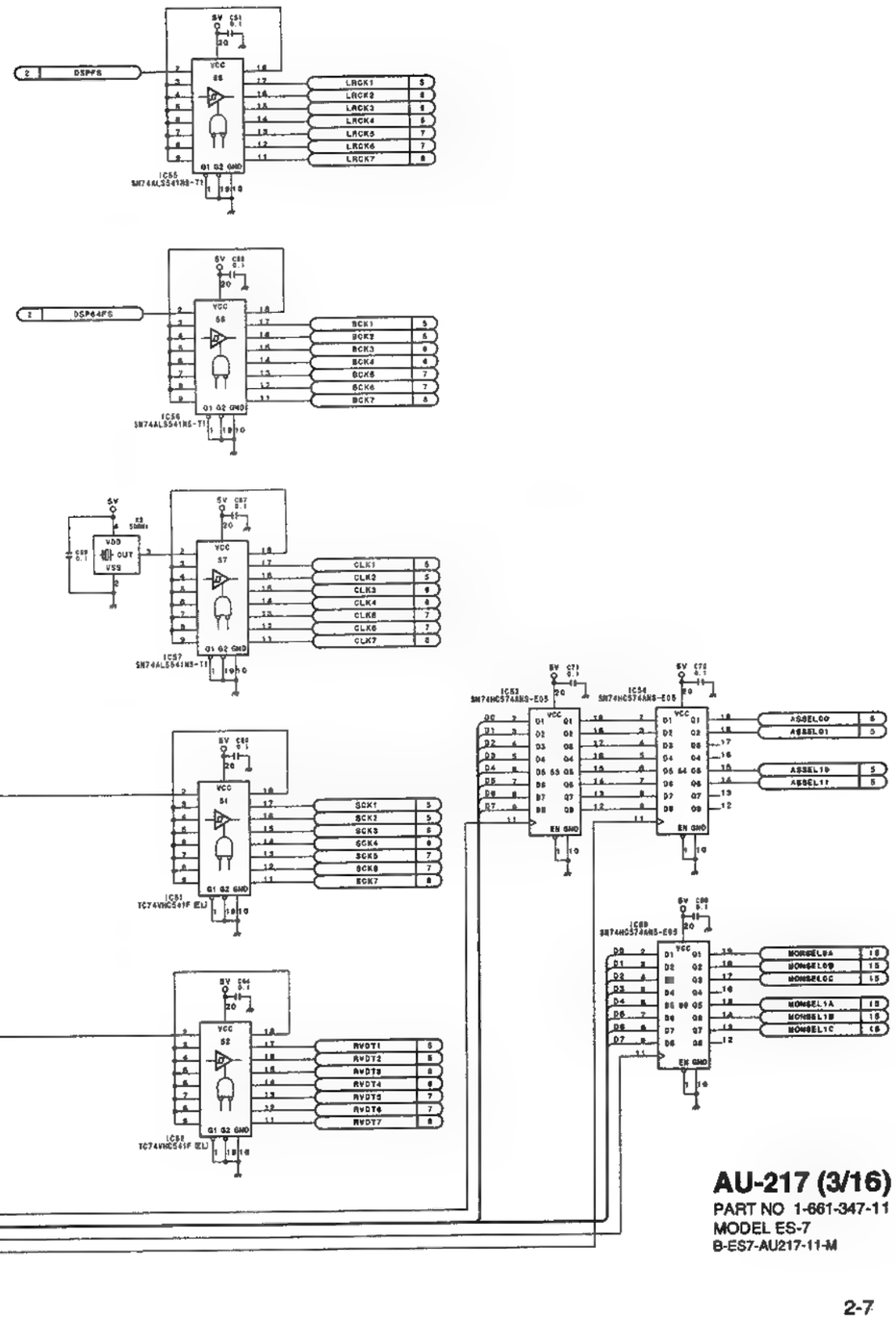

AU-217 (3/16)
PART NO 1-661-347-11
MODEL ES-7
B-ES7-AU217-11-M

FM-SOUND

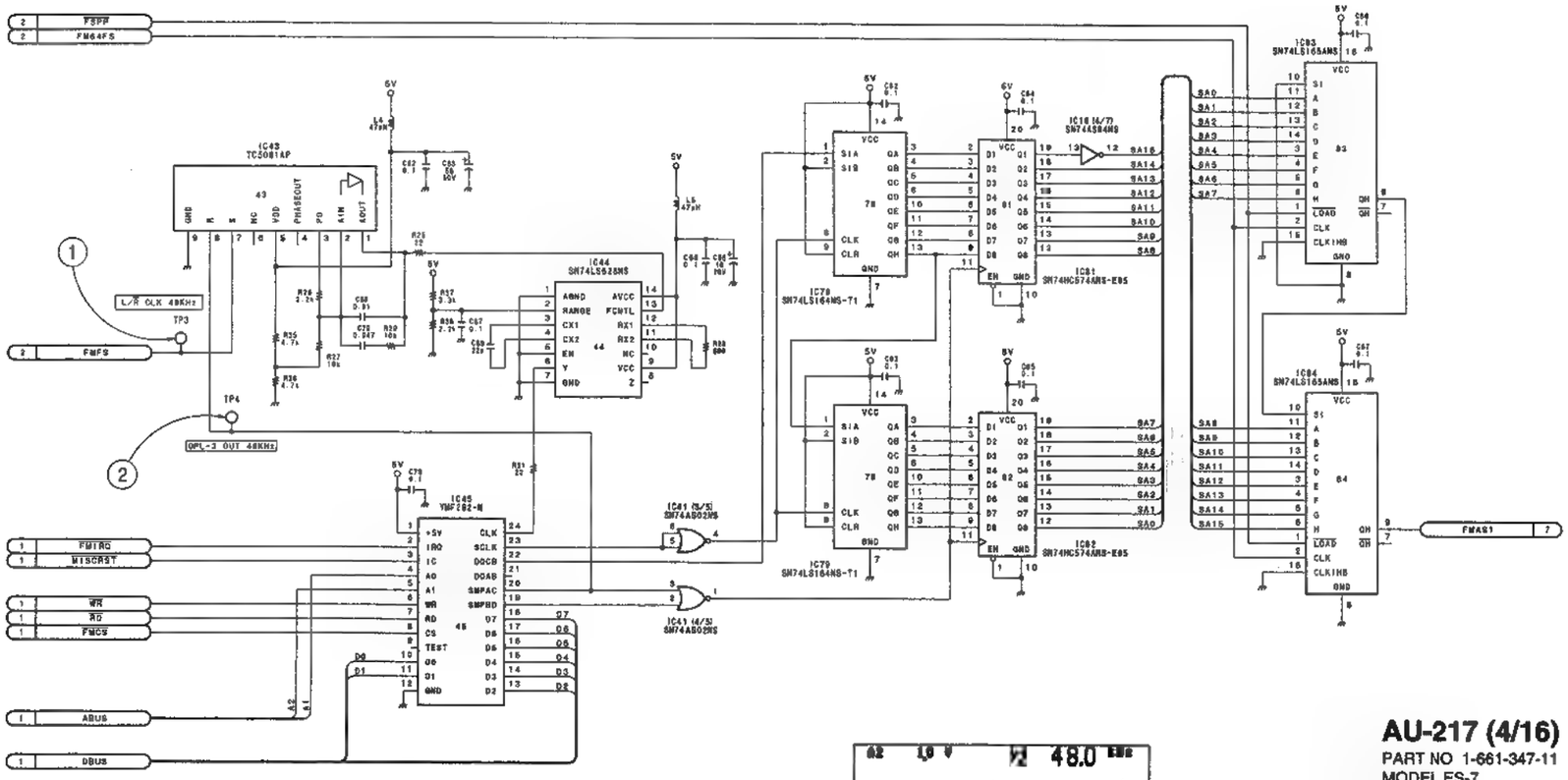

AU-217 (4/16)
PART NO 1-661-347-11
MODEL ES-7
B-ES7-AU217-11-M

DSP1, 2

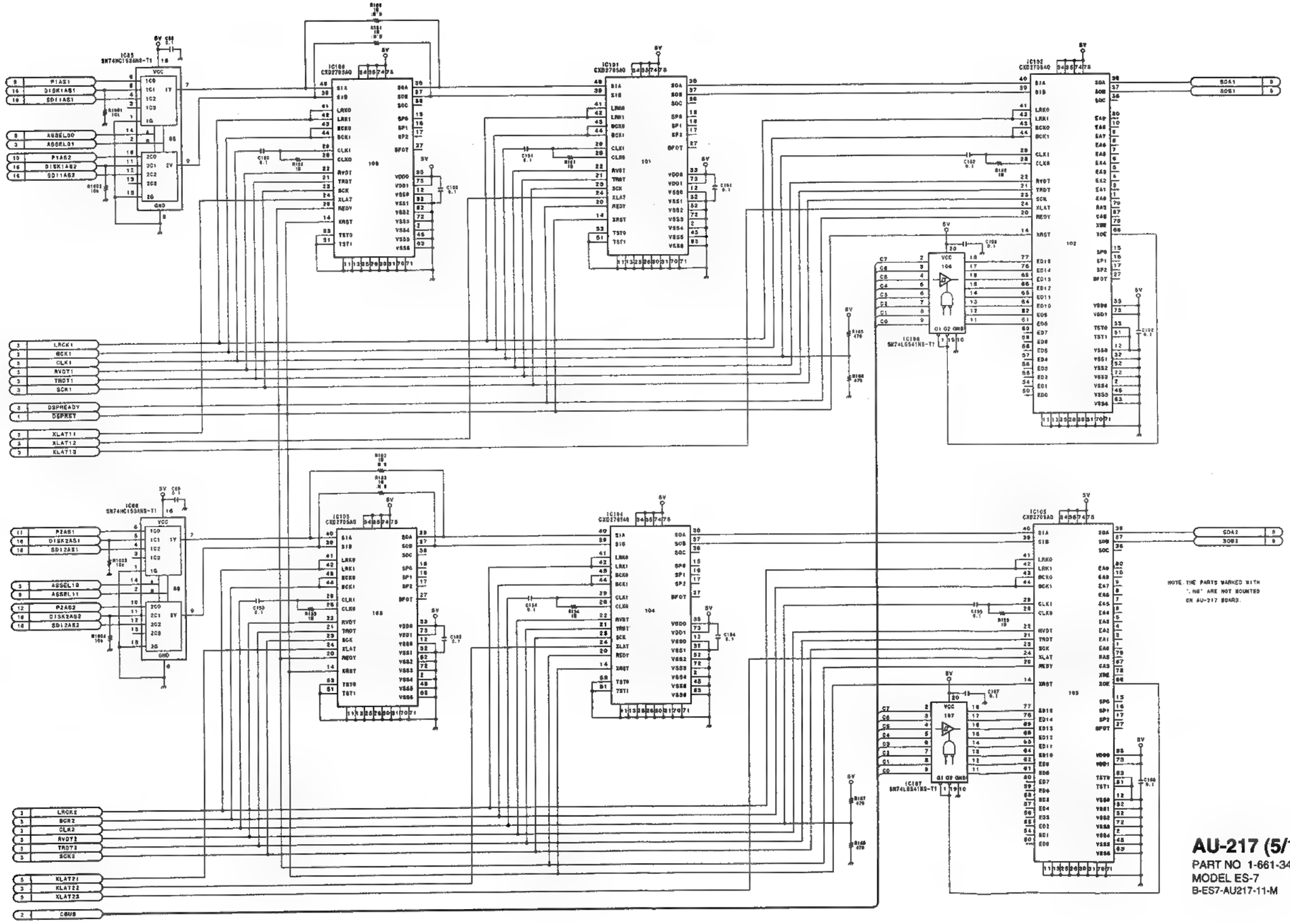

AU-217 (5/16)
PART NO 1-661-347-11
MODEL ES-7
B-ES7-AU217-11-M

DSP3, 4

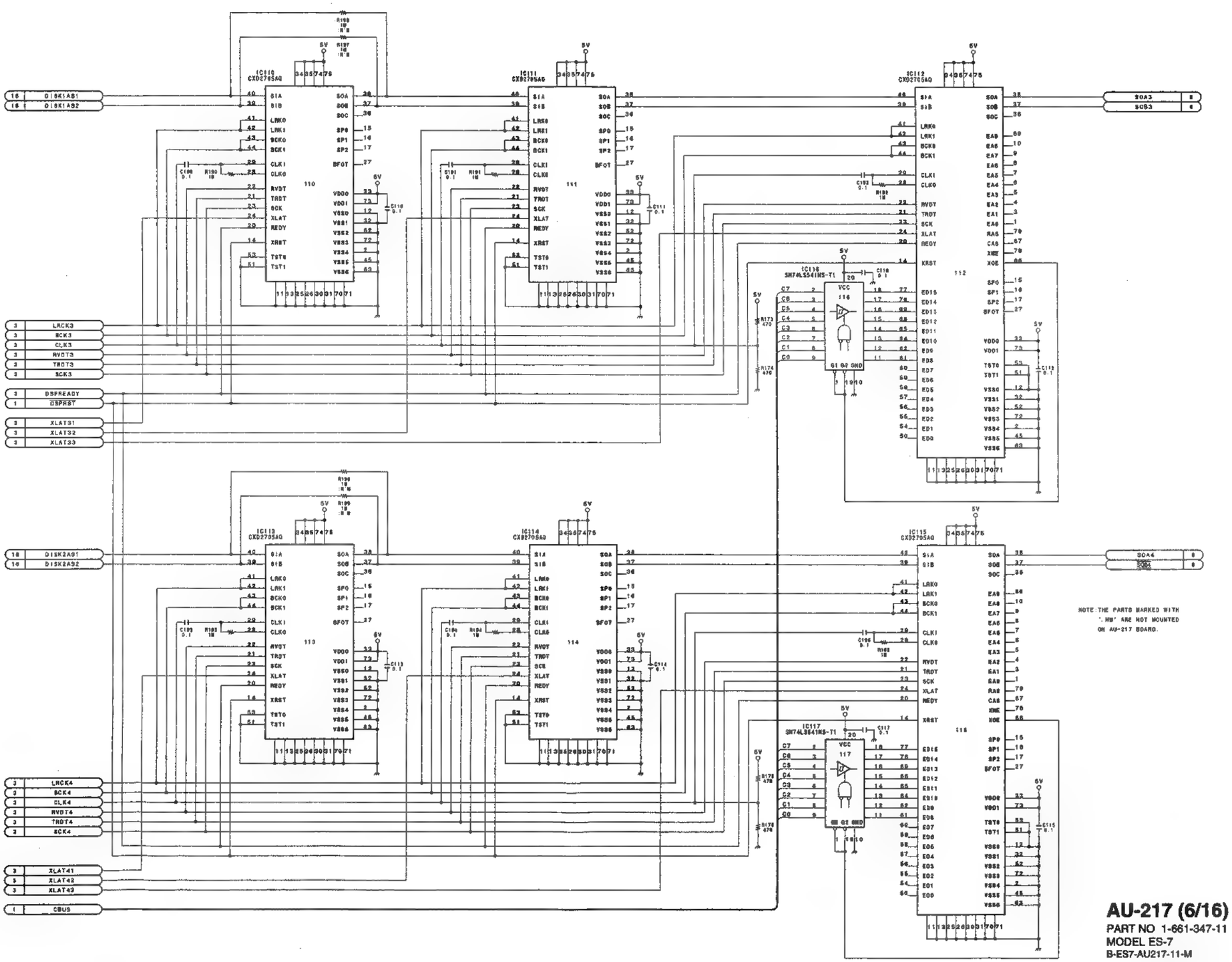

AU-217 (6/16)
PART NO 1-661-347-11
MODEL ES-7
B-ES7-AU217-11-M

DSP5, 6

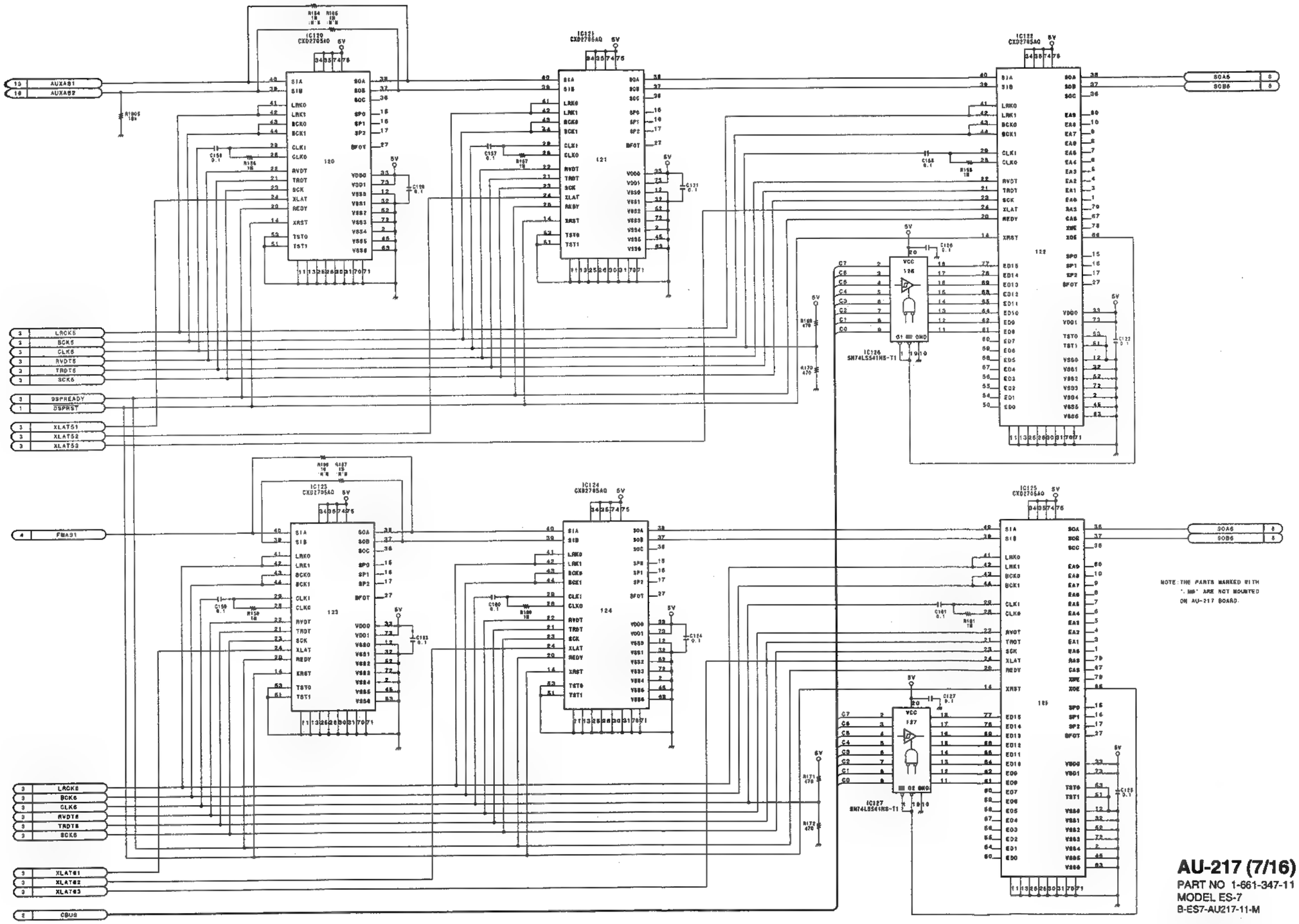

AU-217 (7/16)
PART NO 1-661-347-11
MODEL ES-7
B-ES7-AU217-11-M

ADDER & DSP7

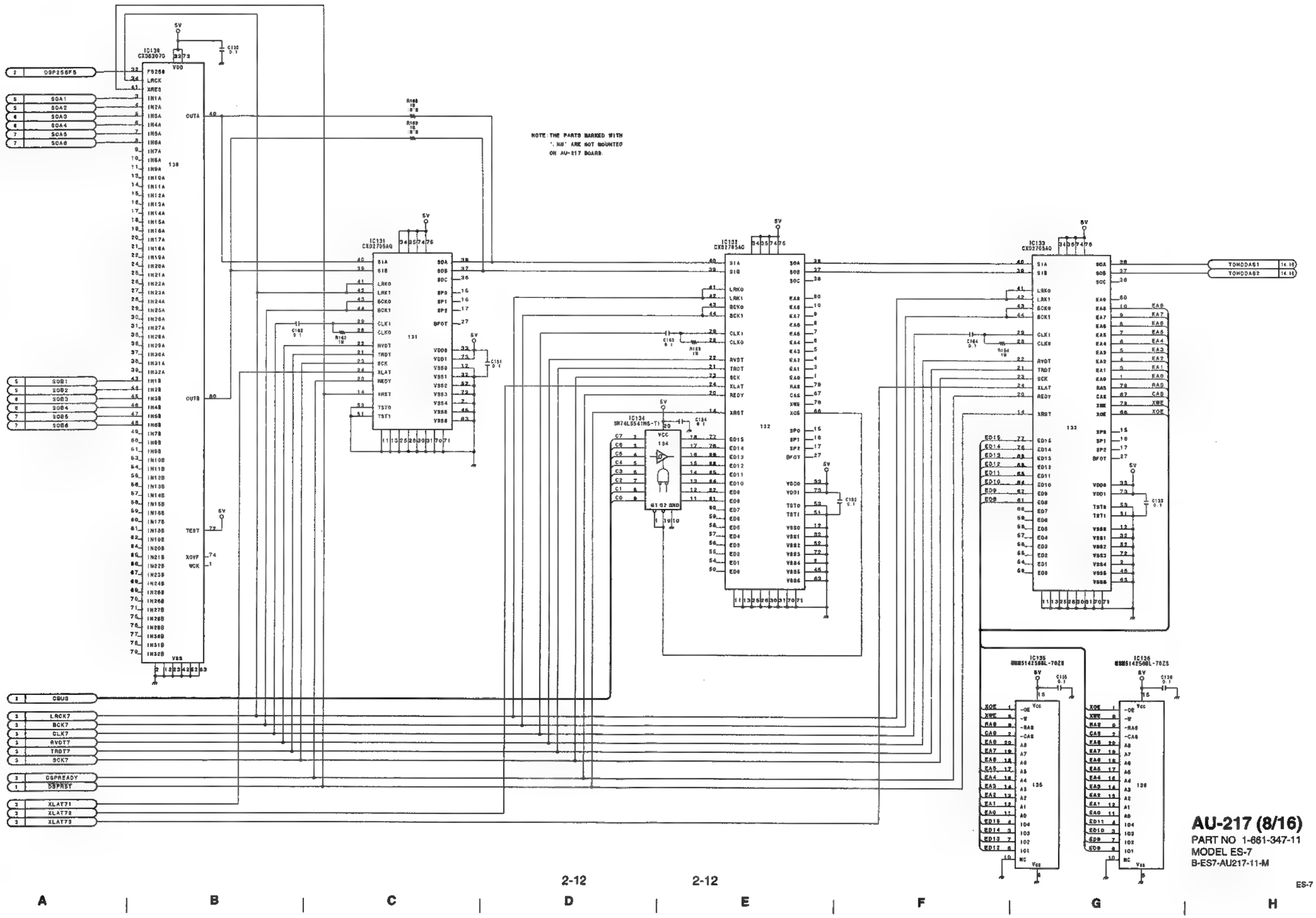

AU-217 (8/16)
PART NO 1-661-347-11
MODEL ES-7
B-ES7-AU217-11-M

ADC1 PLAYER1 CH1, 2

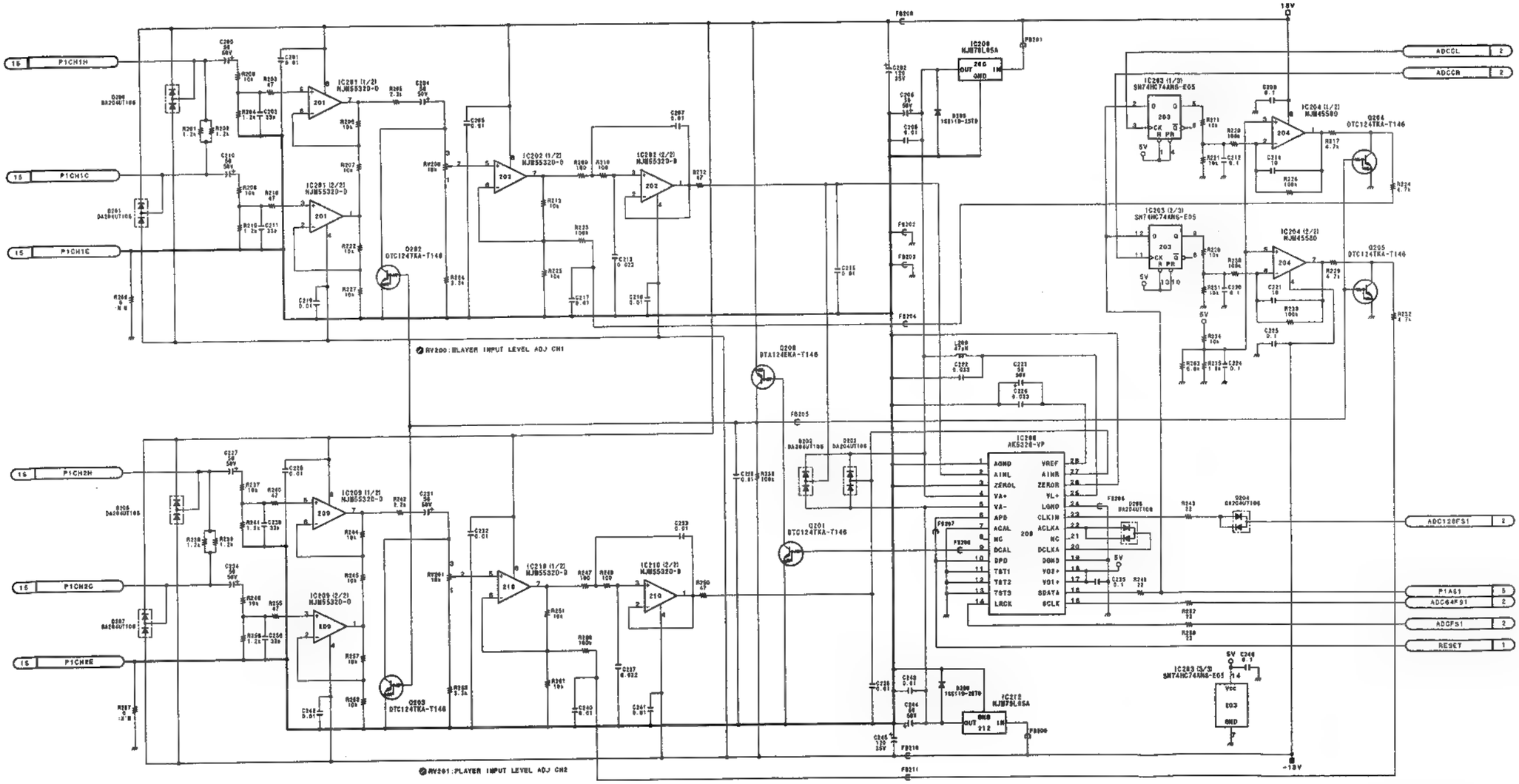

AU-217 (9/16)
PART NO 1-661-347-11
MODEL ES-7
B-ES7-AU217-11-M

ADC2 PLAYER1 CH3, 4

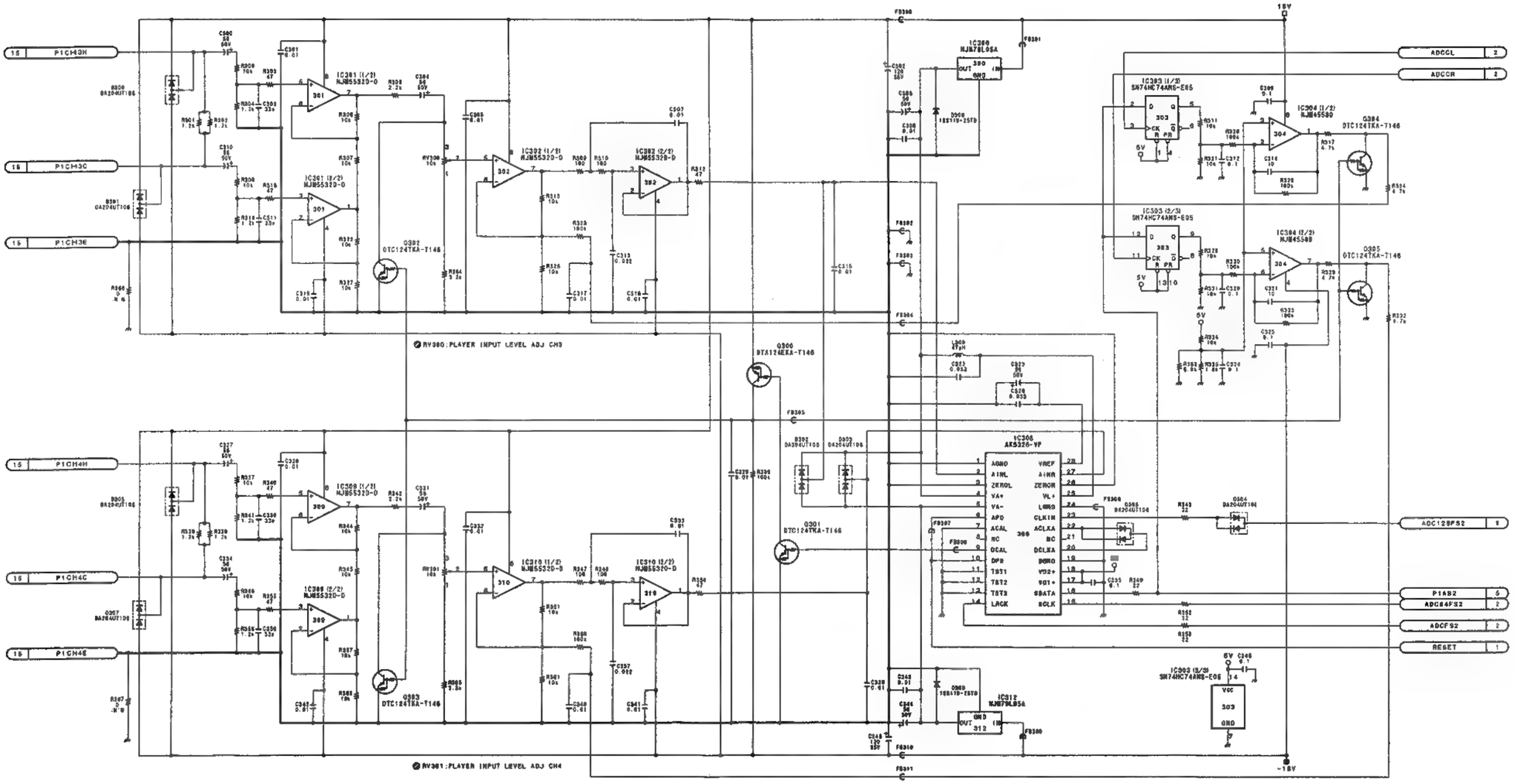

AU-217 (10/16)
PART NO 1-661-347-11
MODEL ES-7
B-ES7-AU217-11-M

ADC3 PLAYER CH1, 2

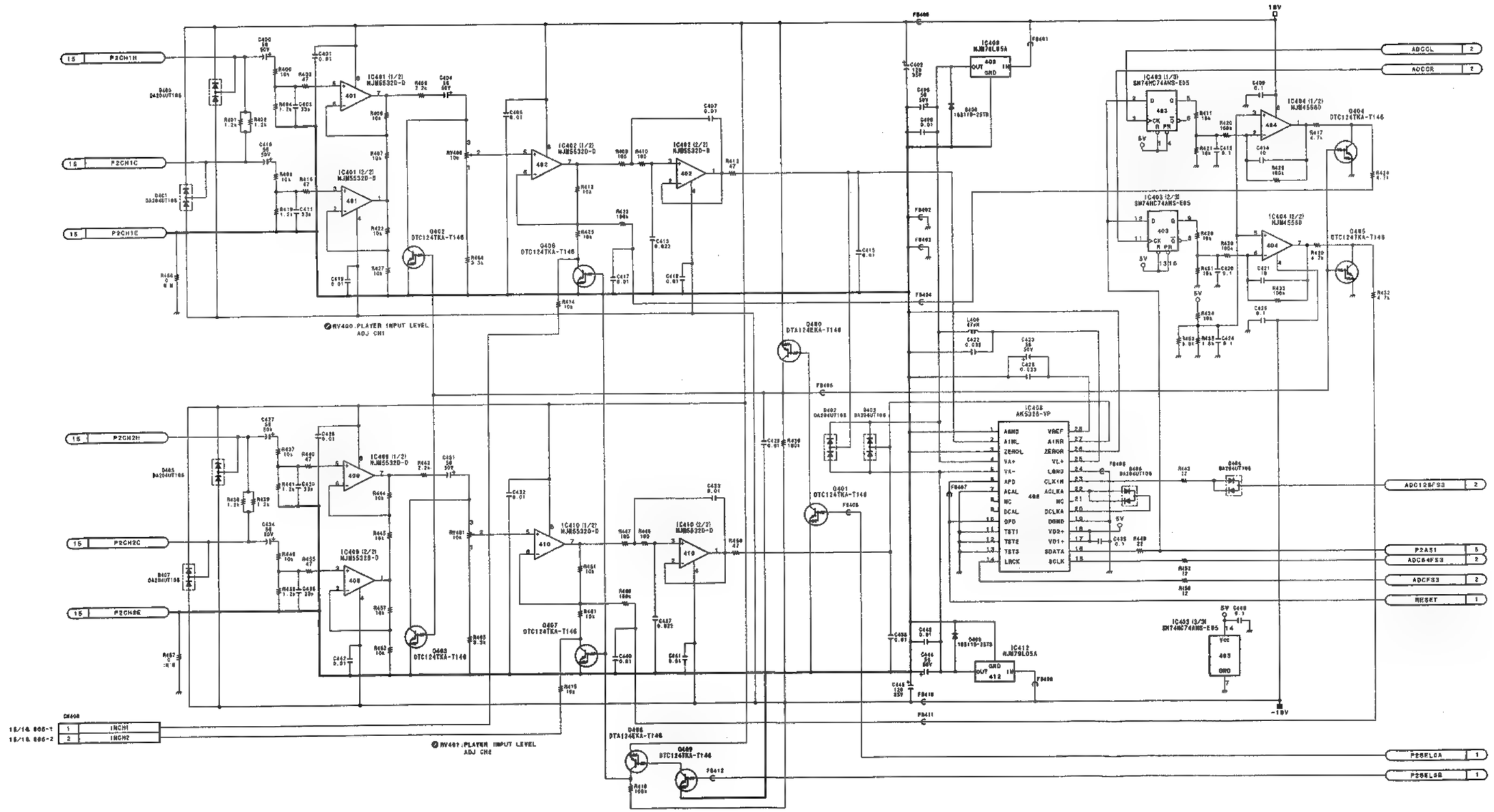

AU-217 (11/16)
PART NO 1-661-347-11
MODEL ES-7
B-ES7-AU217-11-M

ADC4 PLAYER2 CH3, 4

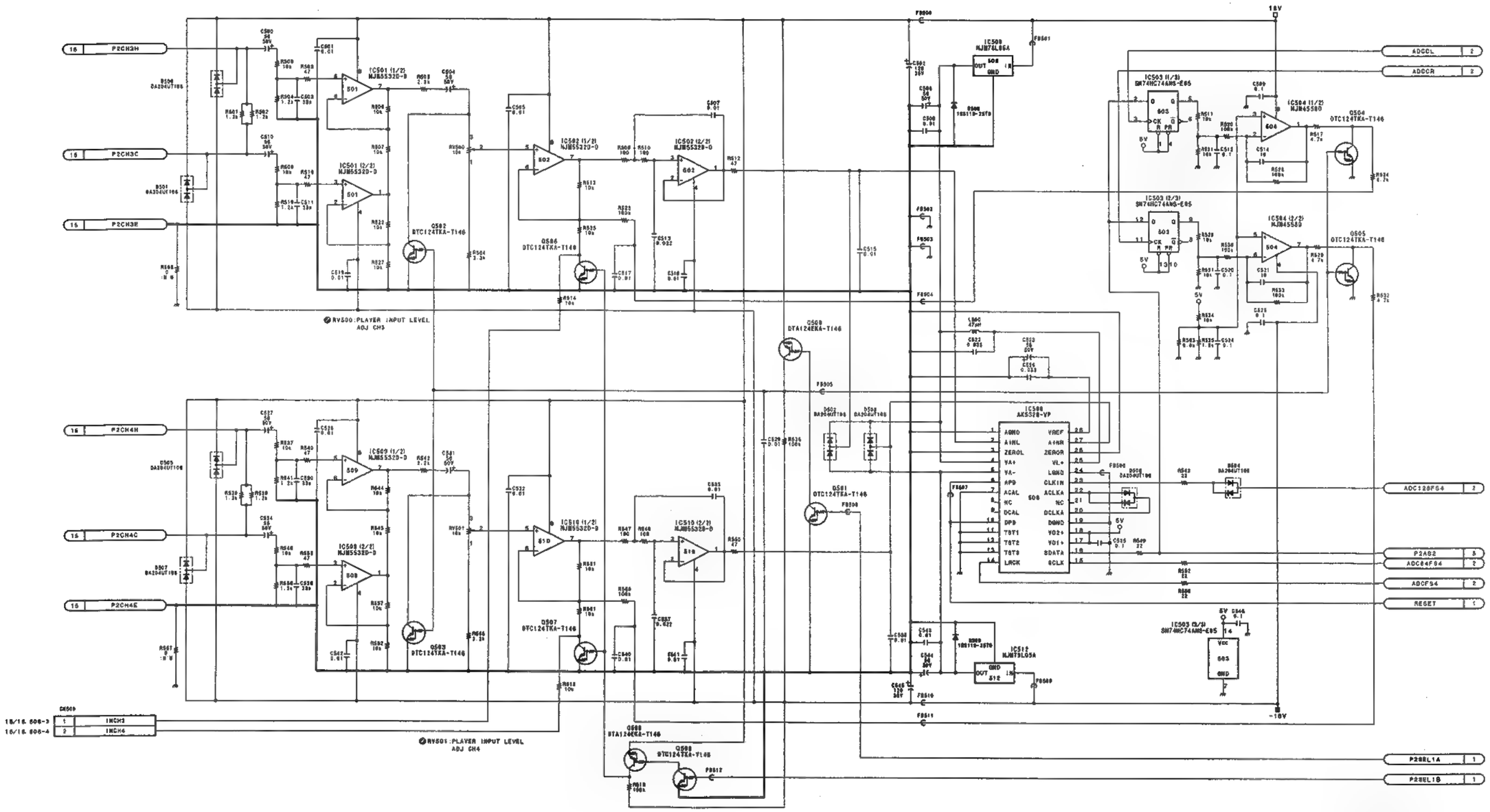

AU-217 (12/16)
PART NO 1-661-347-11
MODEL ES-7
B-ES7-AU217-11-M

ADC5 AUX

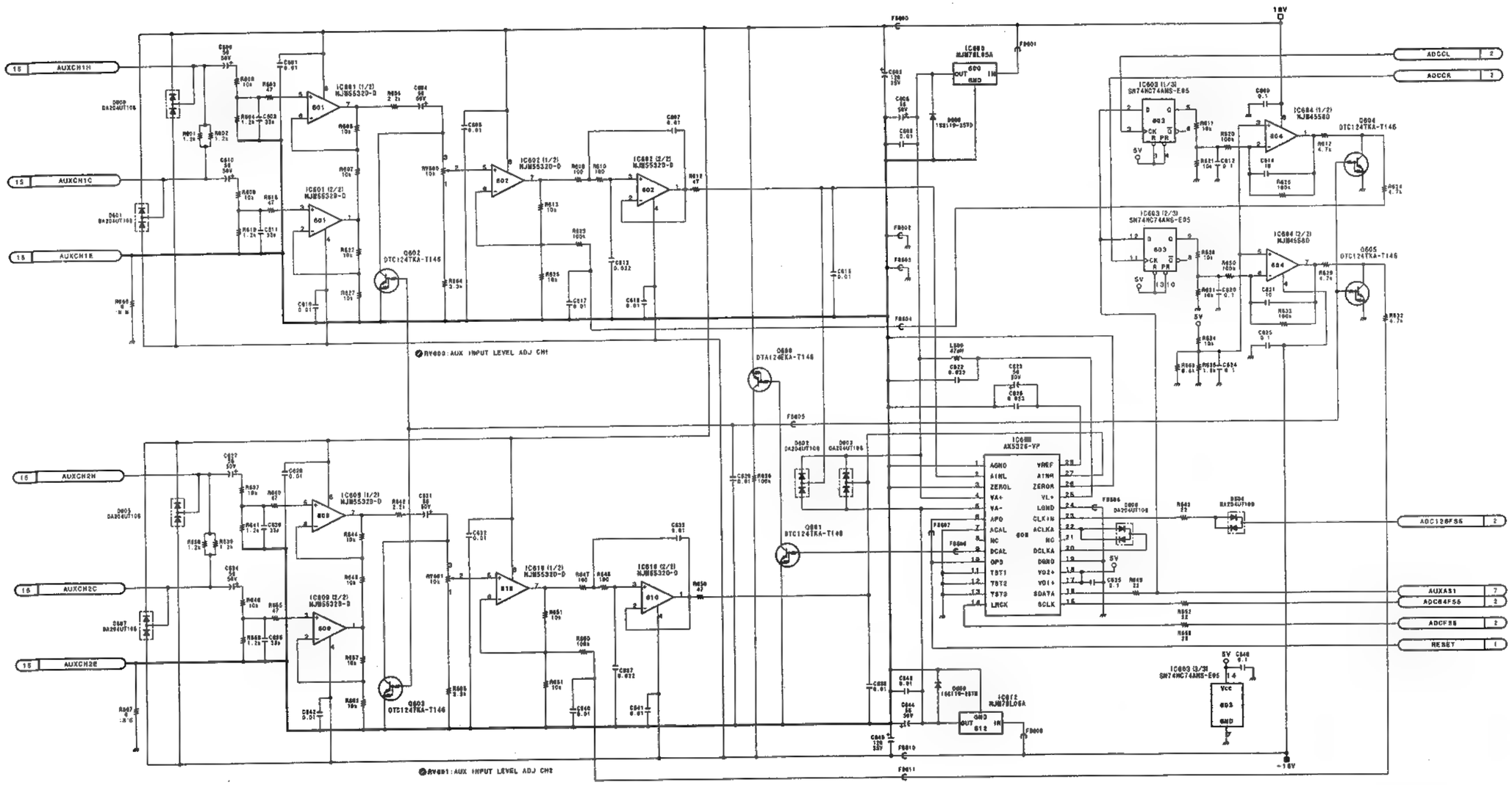

AU-217 (13/16)
PART NO 1-661-347-11
MODEL ES-7
B-ES7-AU217-11-M

DAC

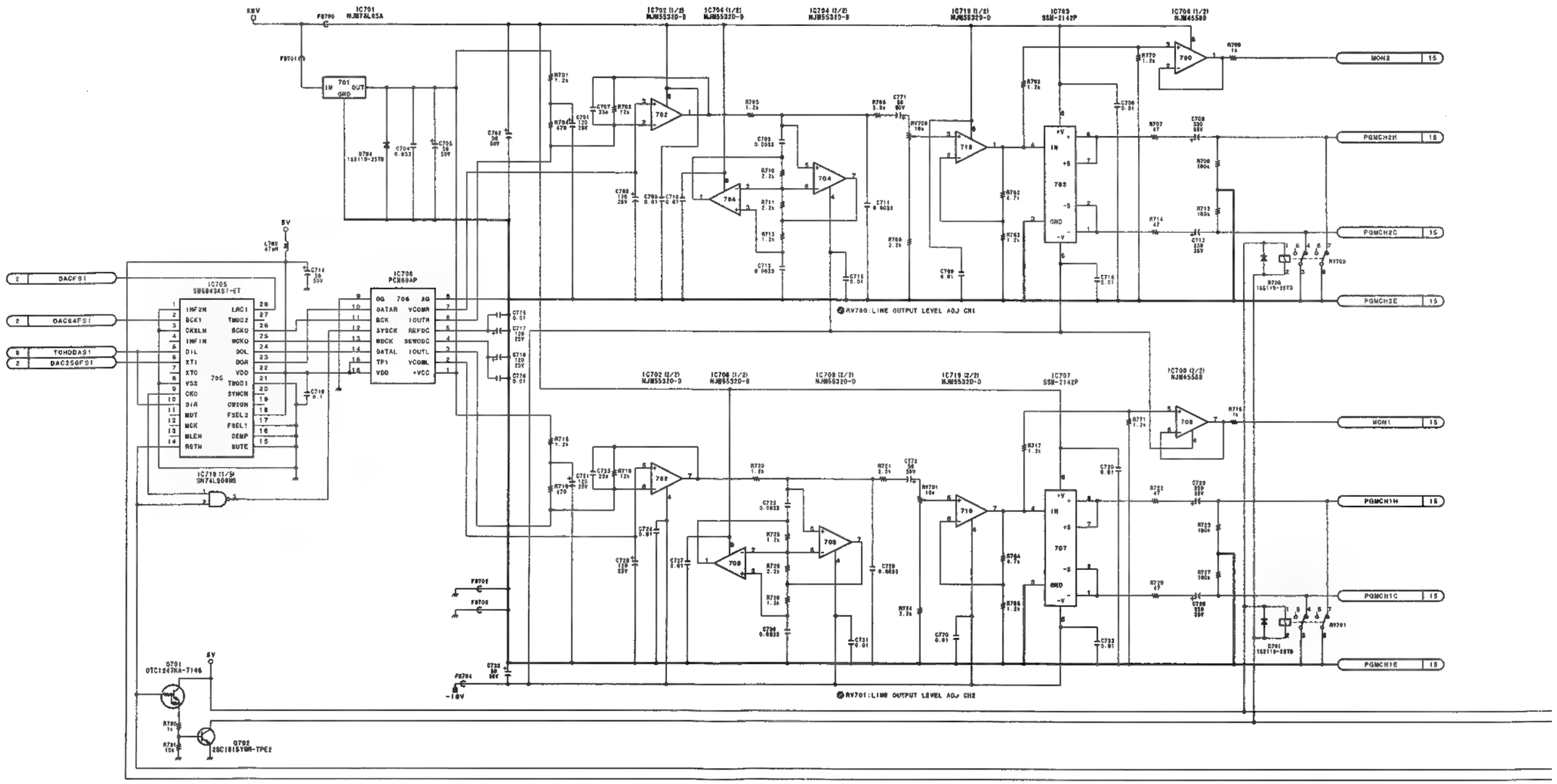
IC701 NJM78L05A
IC702 (1/2) NJM5532D-B
IC704 (1/2) NJM5532D-B
IC705 SN5843AS1-ET
IC706 PCM69AP
IC707 SSM-2142P
IC708 (1/2) NJM4558B
IC709 (2/2) NJM4558B
IC710 (1/2) NJM5532D-B
IC718 (1/2) NJM5532D-B
IC719 (2/2) NJM5532D-B
IC718 (1/2) SN74LS08NS
Q701 DTC124TKA-T146
Q702 2SC1815YGR-TPE2
DACFS1
DAC64FS1
TOHDDAS1
DAC256FS1
MON2
PGMCH2H
PGMCH2C
PGMCH2E
MON1
PGMCH1H
PGMCH1C
PGMCH1E
RV706:LINE OUTPUT LEVEL ADJ CH1
RV701:LINE OUTPUT LEVEL ADJ CH2

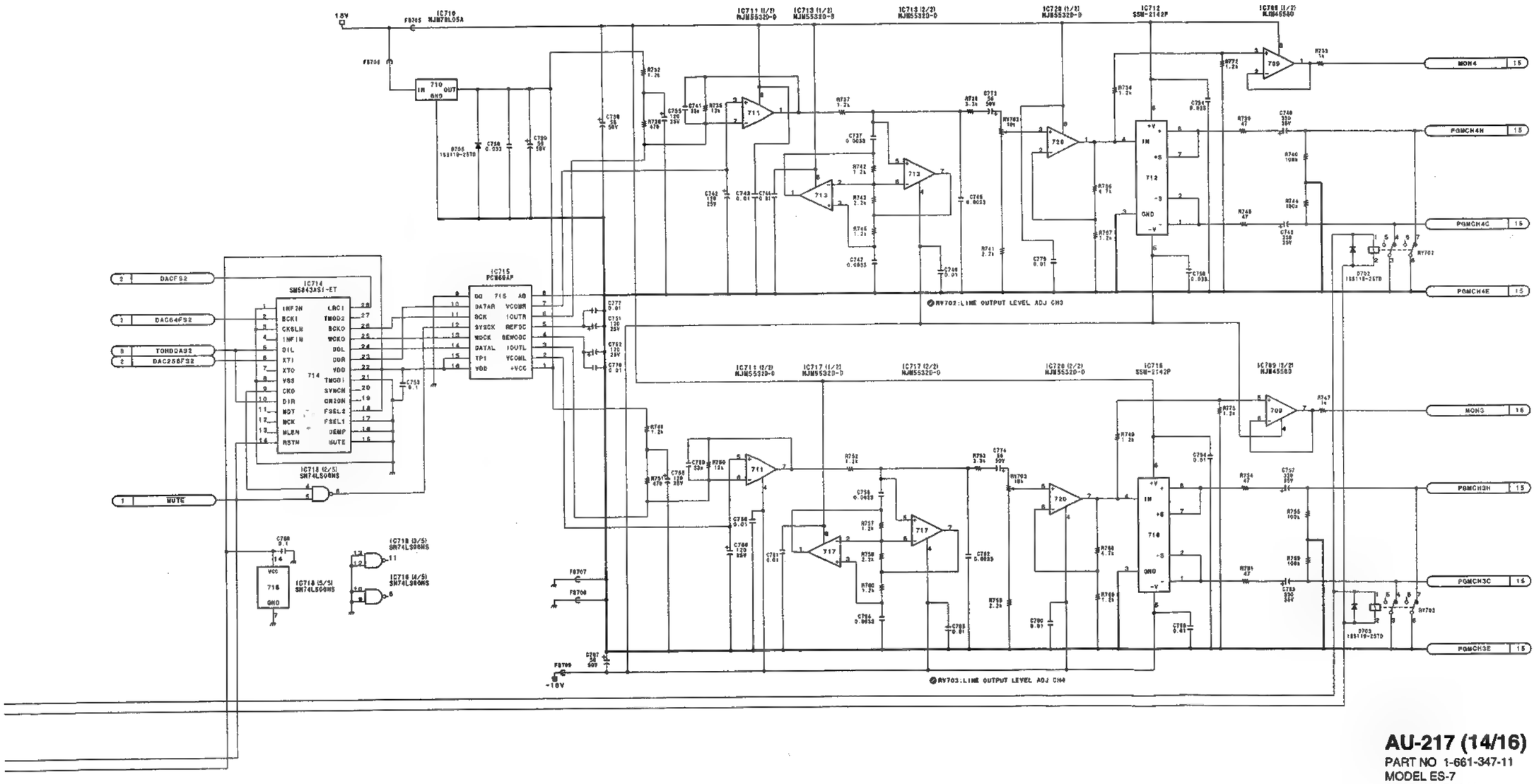

AU-217 (14/16)
PART NO 1-661-347-11
MODEL ES-7
B-ES7-AU217-11-M

MONITOR & AUDIO-CONNECTOR

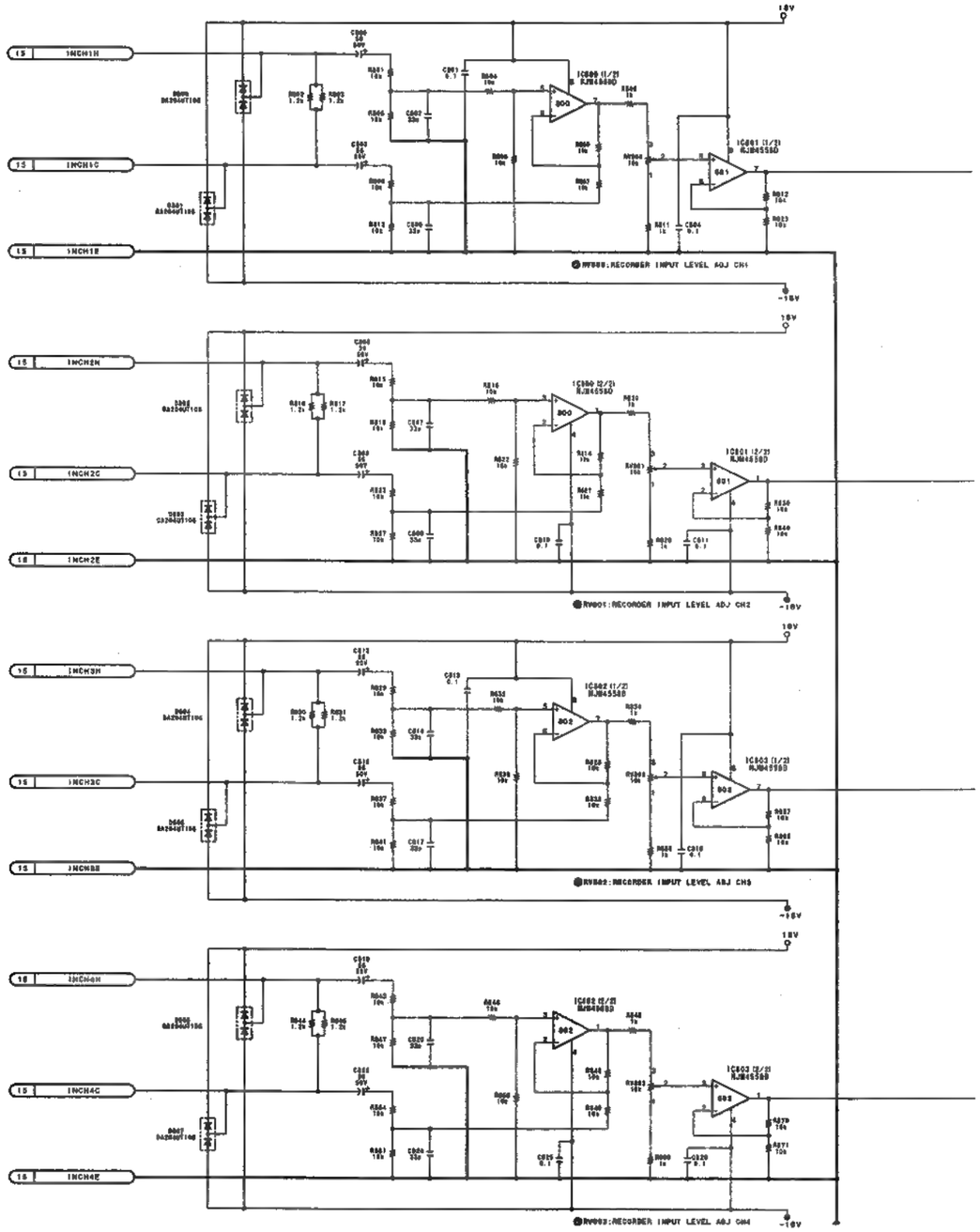

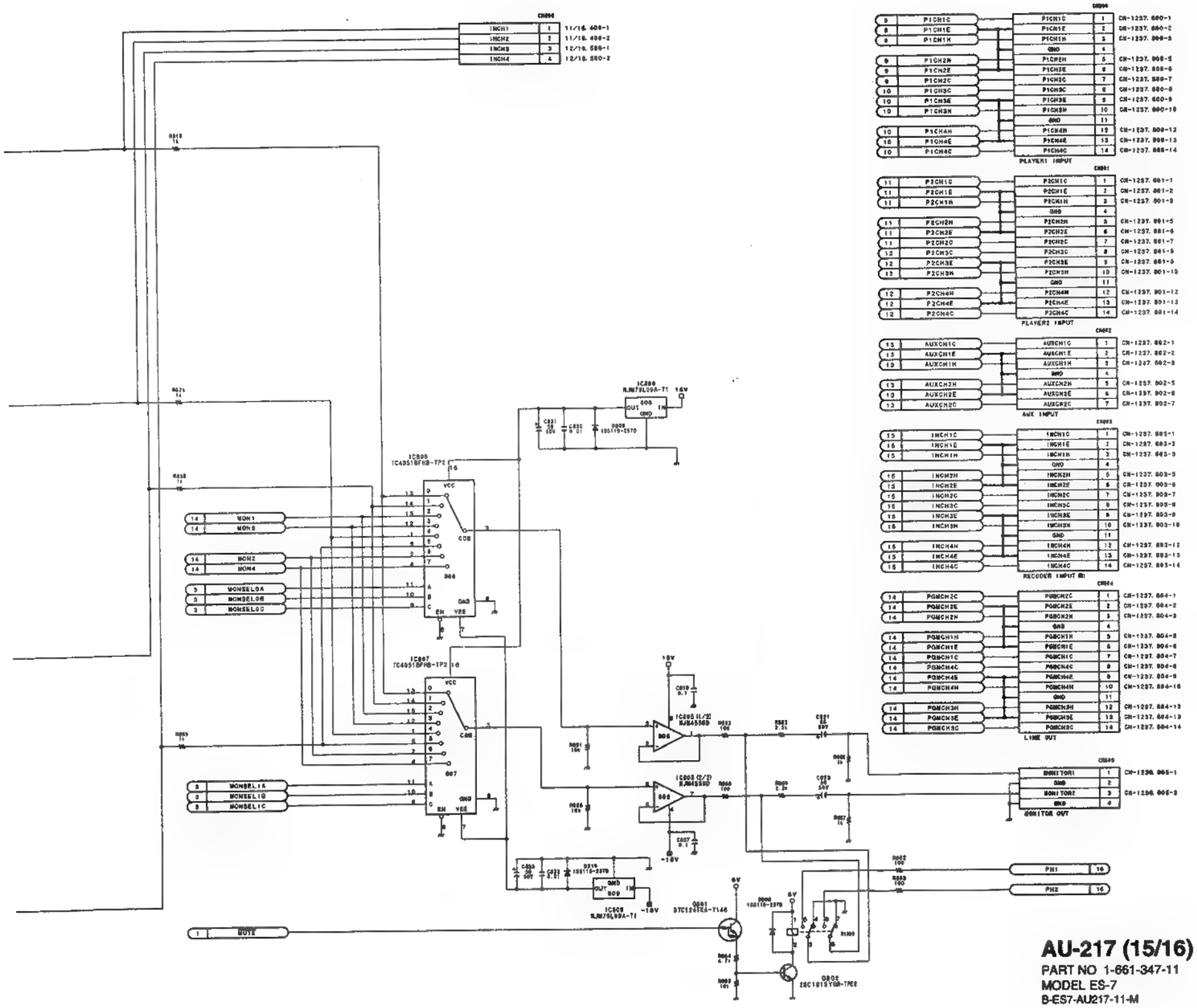

AU-217 (15/16)
PART NO 1-661-347-11
MODEL ES-7
B-ES7-AU217-11-M

CONNECTOR

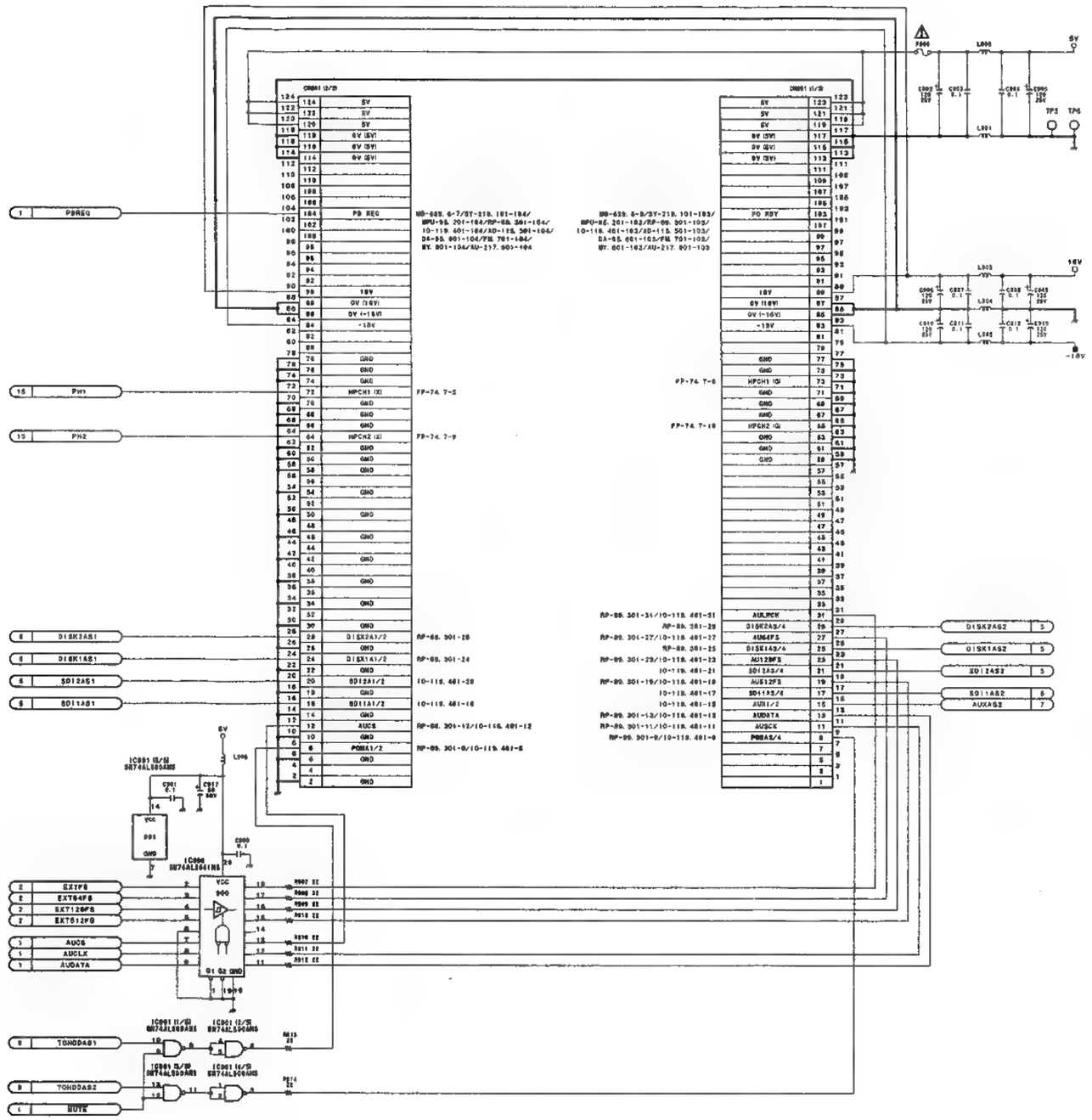
PBREQ
PH1
PH2
DISK2AS1
DISK1AS1
SDI2AS1
SDI1AS1
EXT8
EXT64FS
EXT128FS
EXT512FS
AUCS
AUCLK
AUDATA
TONDDAS1
TONDDAS2
MUTE
5V
18V
-18V
GND
PBREQ
PH1
PH2
AUCS
AUCLK
AUDATA
AUWCK
AUBCK
PDRDY
DISK2AS2
DISK1AS2
SDI2AS2
SDI1AS2
AUXAS2

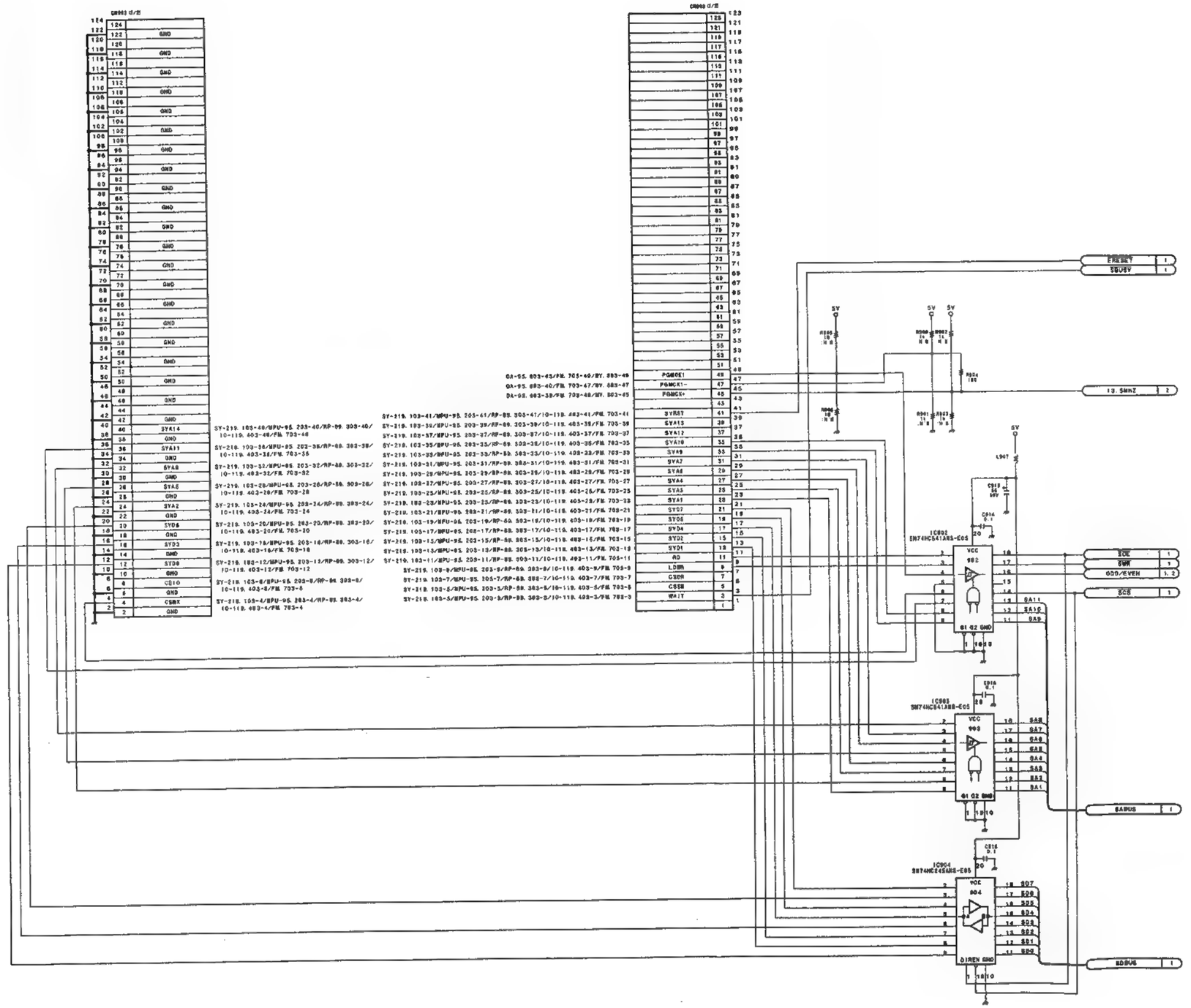

AU-217 (16/16)
PART NO 1-661-347-11
MODEL ES-7
B-ES7-AU217-11-M

SYSTEM CONTROL BOARD

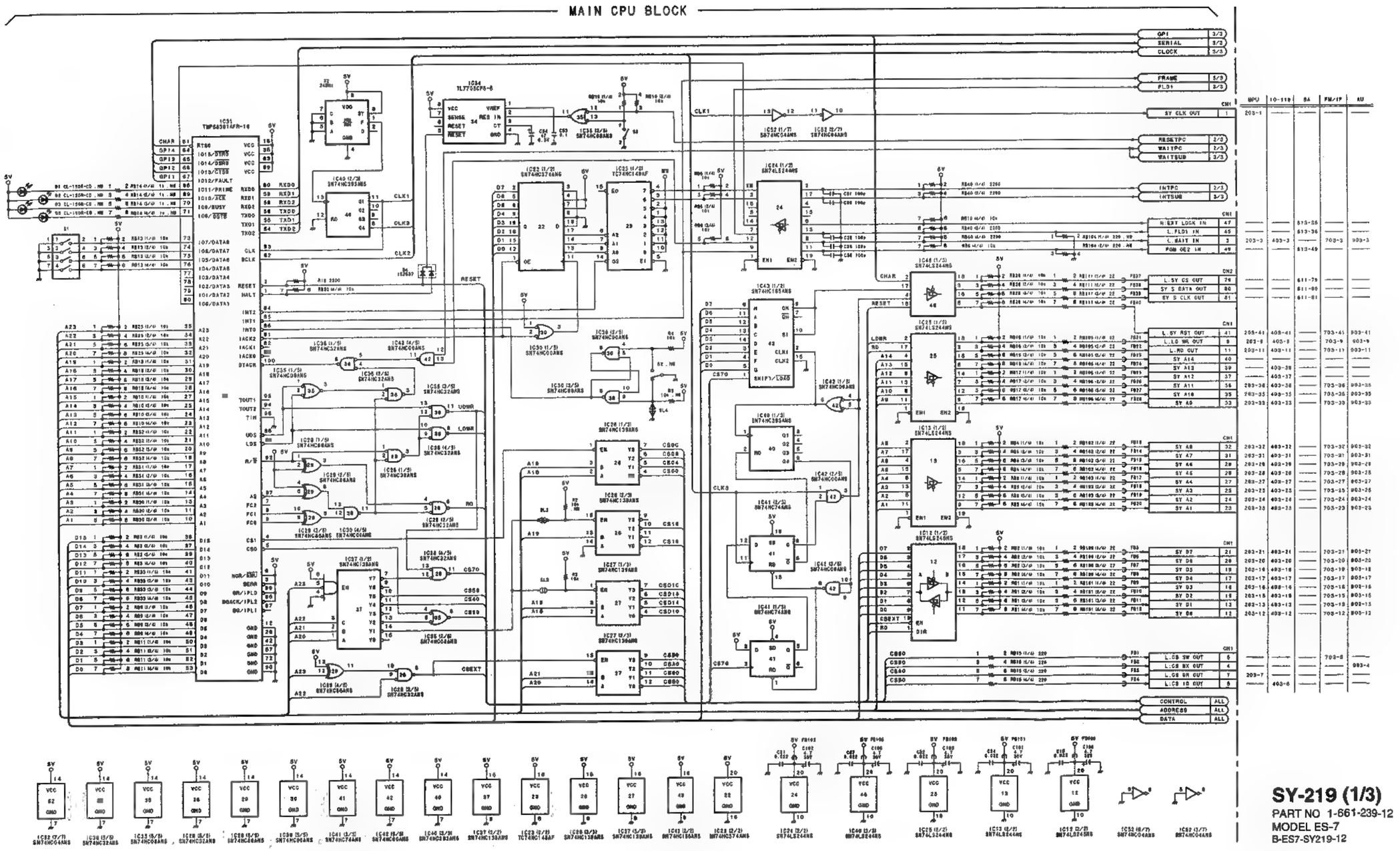

SY-219 (1/3)
PART NO 1-661-239-12
MODEL ES-7
B-ES7-SY219-12

SYSTEM CONTROL BOARD

MEMORY BLOCK

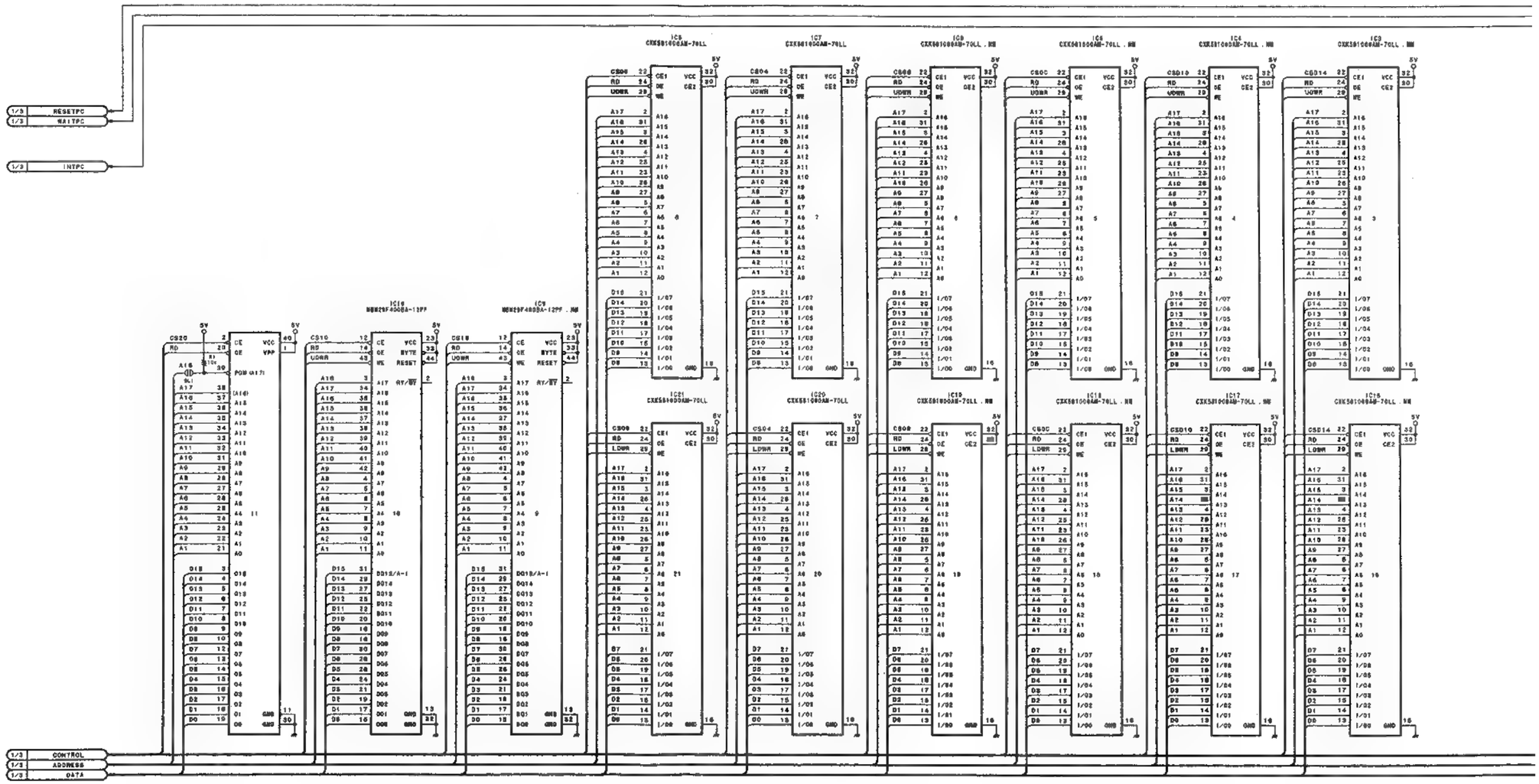

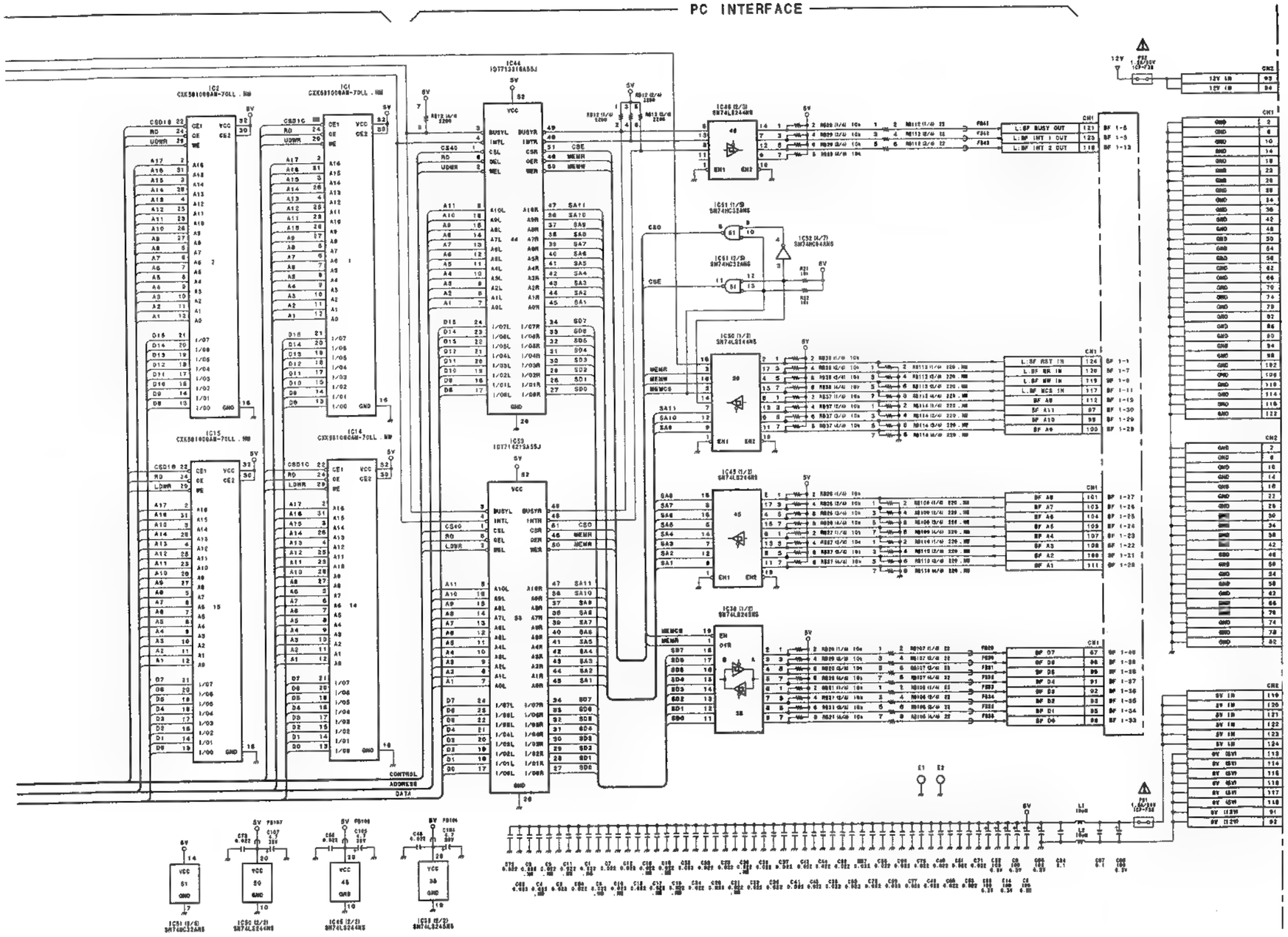

SY-219 (2/3)
PART NO 1-661-239-12
MODEL ES-7
B-ES7-SY219-12

SYSTEM CONTROL BOARD

SUB CPU BLOCK

DRIVER & RECEIVER

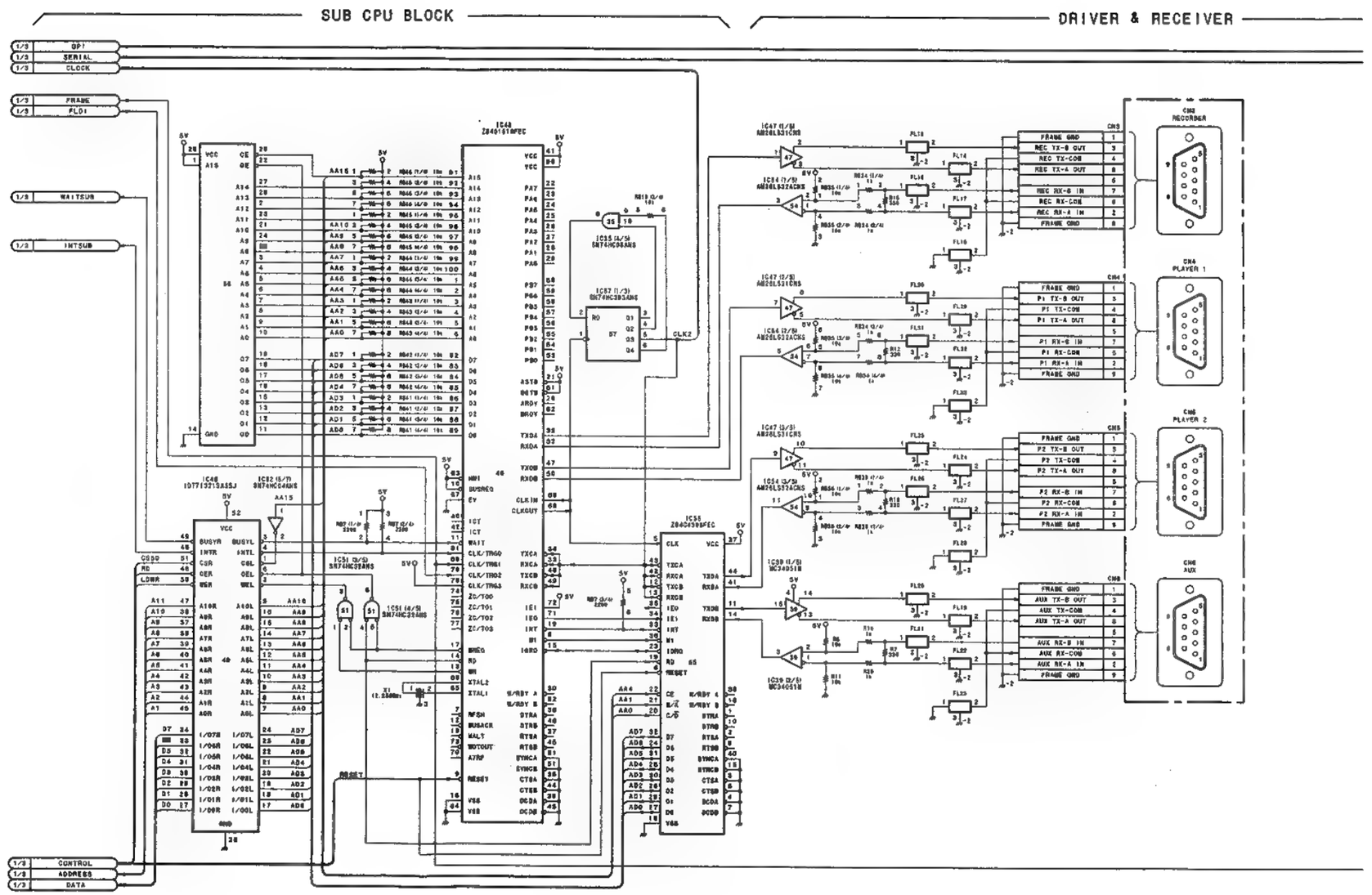

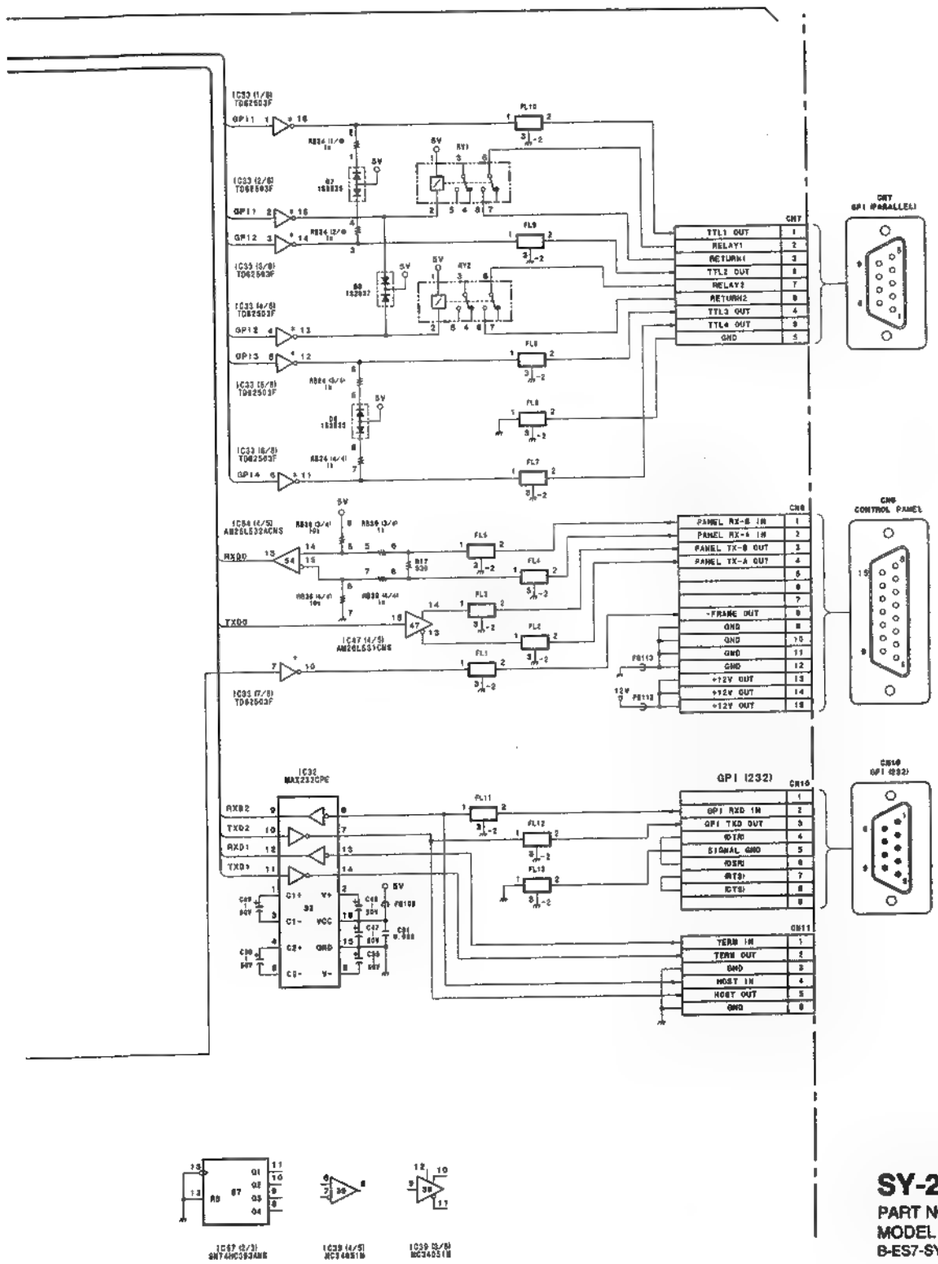

SY-219 (3/3)
PART NO. 1-661-239-12
MODEL ES-7
B-ES7-SY219-12

PCI BUS I/F

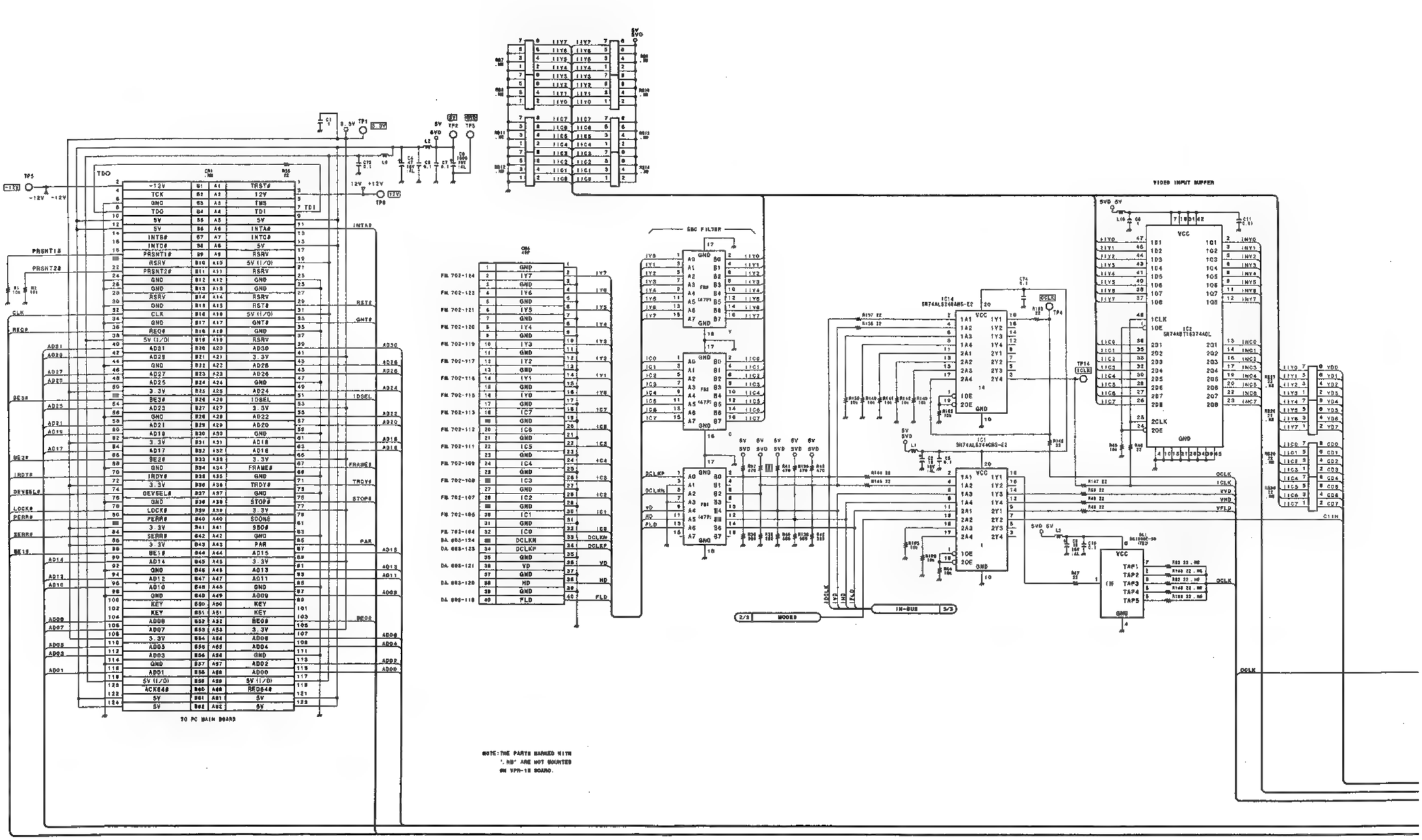
TO PC MAIN BOARD
VIDEO INPUT BUFFER
SBC FILTER
NOTE: THE PARTS MARKED WITH '*' ARE NOT MOUNTED ON VPR-18 BOARD.

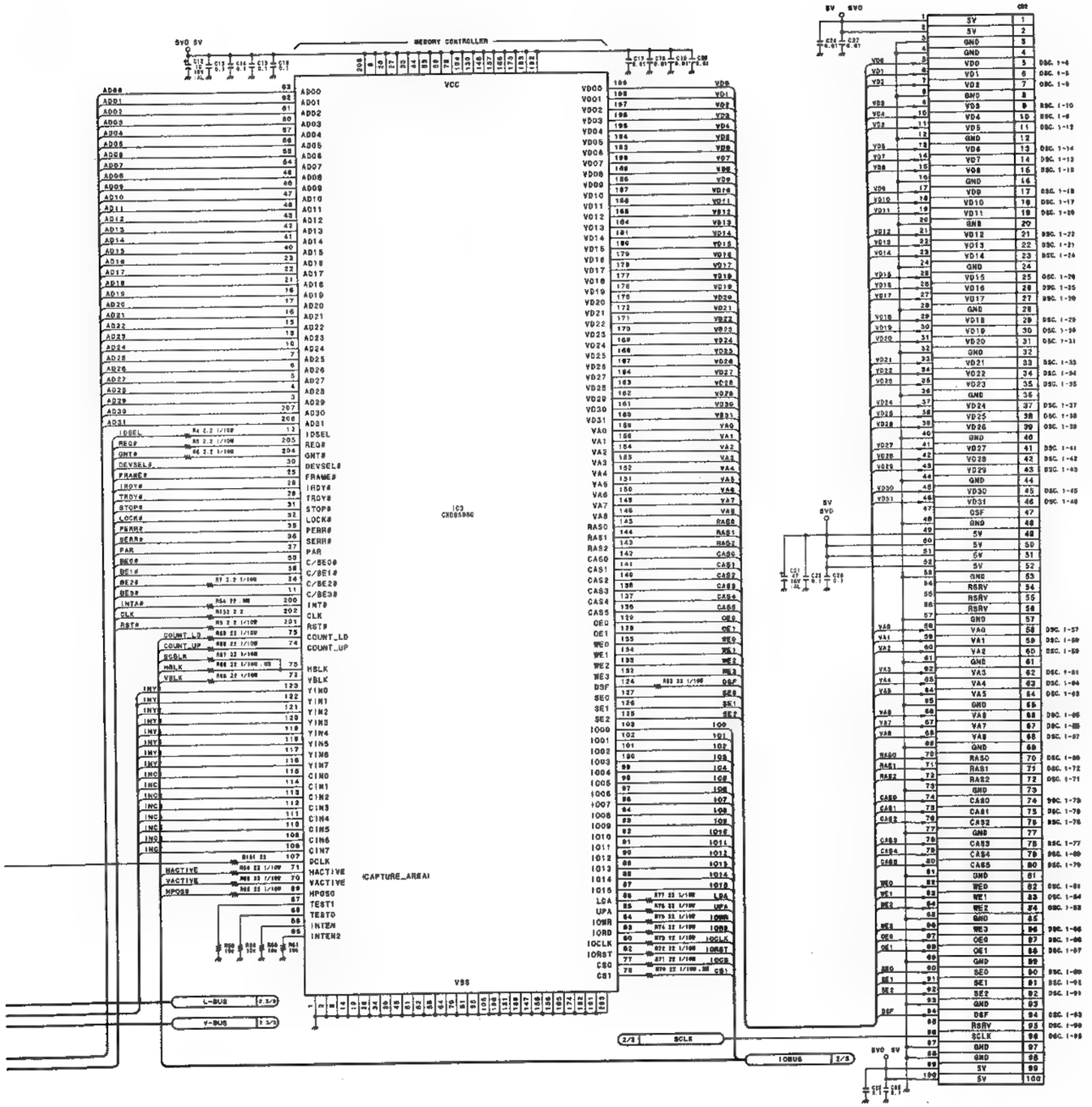

VPR-18 (1/2)
PART NO 1-661-186-11
MODEL ES-7
B-ES7-VPR18-11

TIMING GEN & VIDEO OUTPUT TO DSC-75

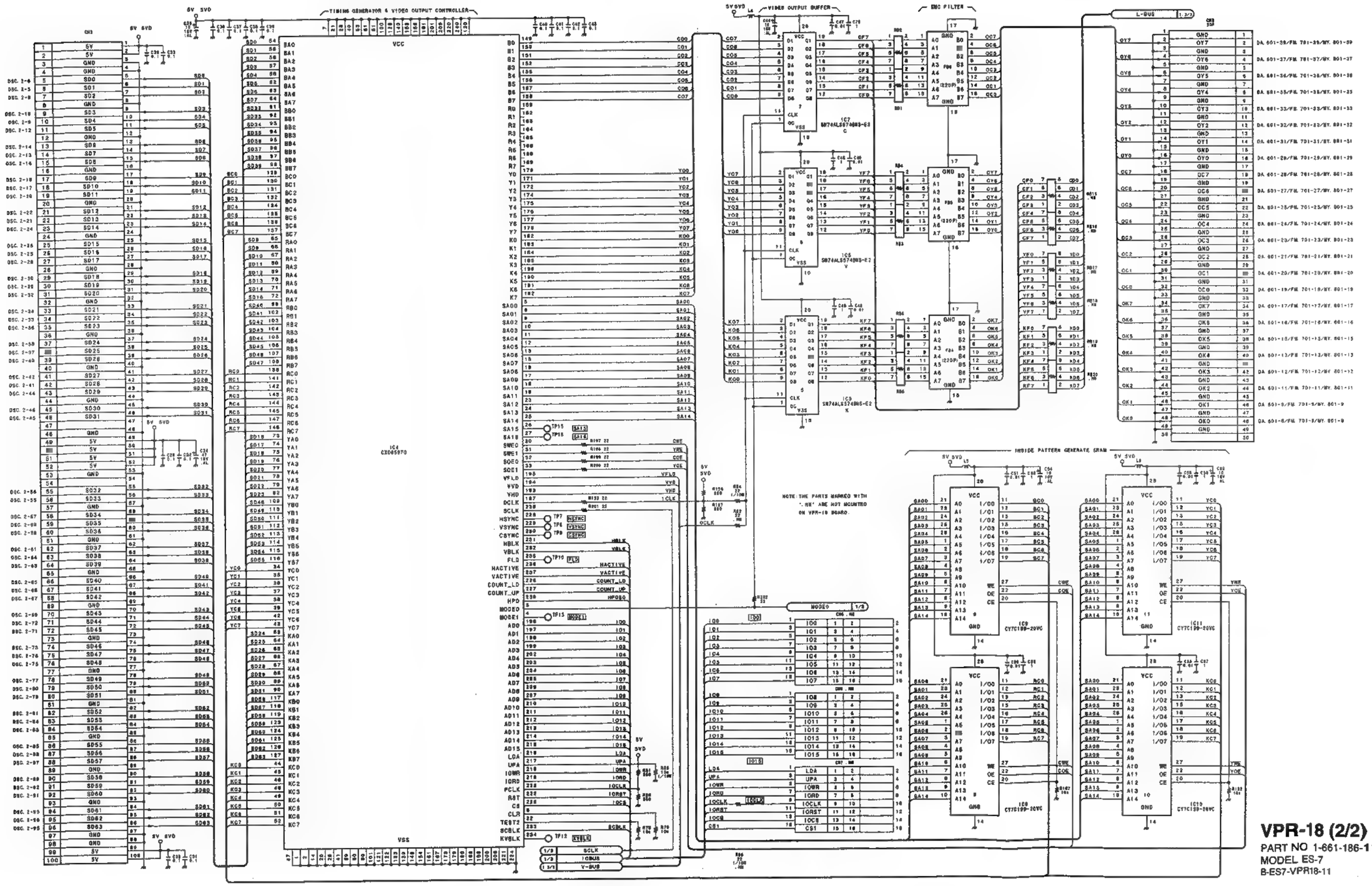

VPR-18 (2/2)
PART NO 1-661-186-11
MODEL ES-7
B-ES7-VPR18-11

VRAM

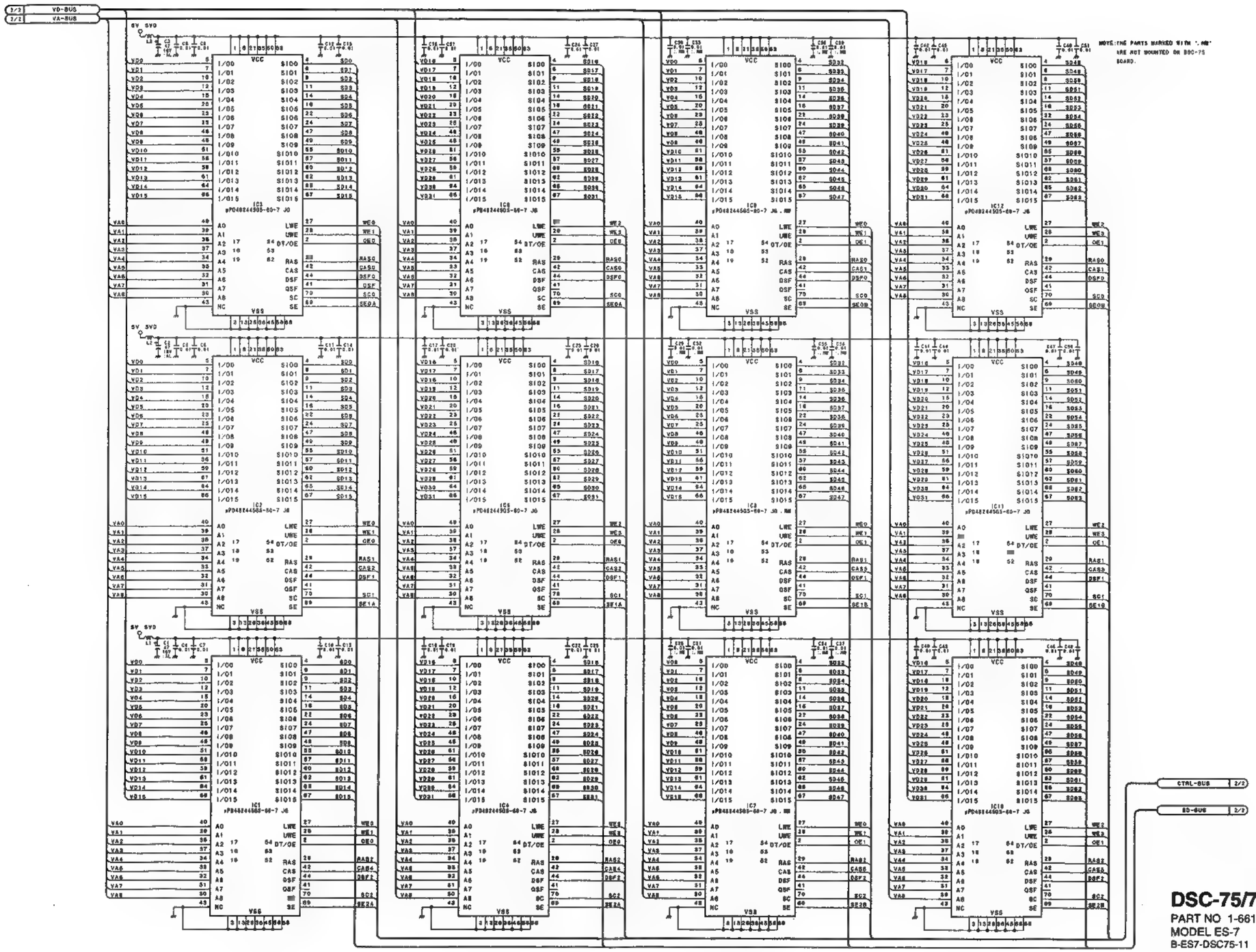

DSC-75/75A (1/2)
PART NO 1-661-187-11
MODEL ES-7
B-ES7-DSC75-11

VIDEO OUTPUT FROM VPR-18

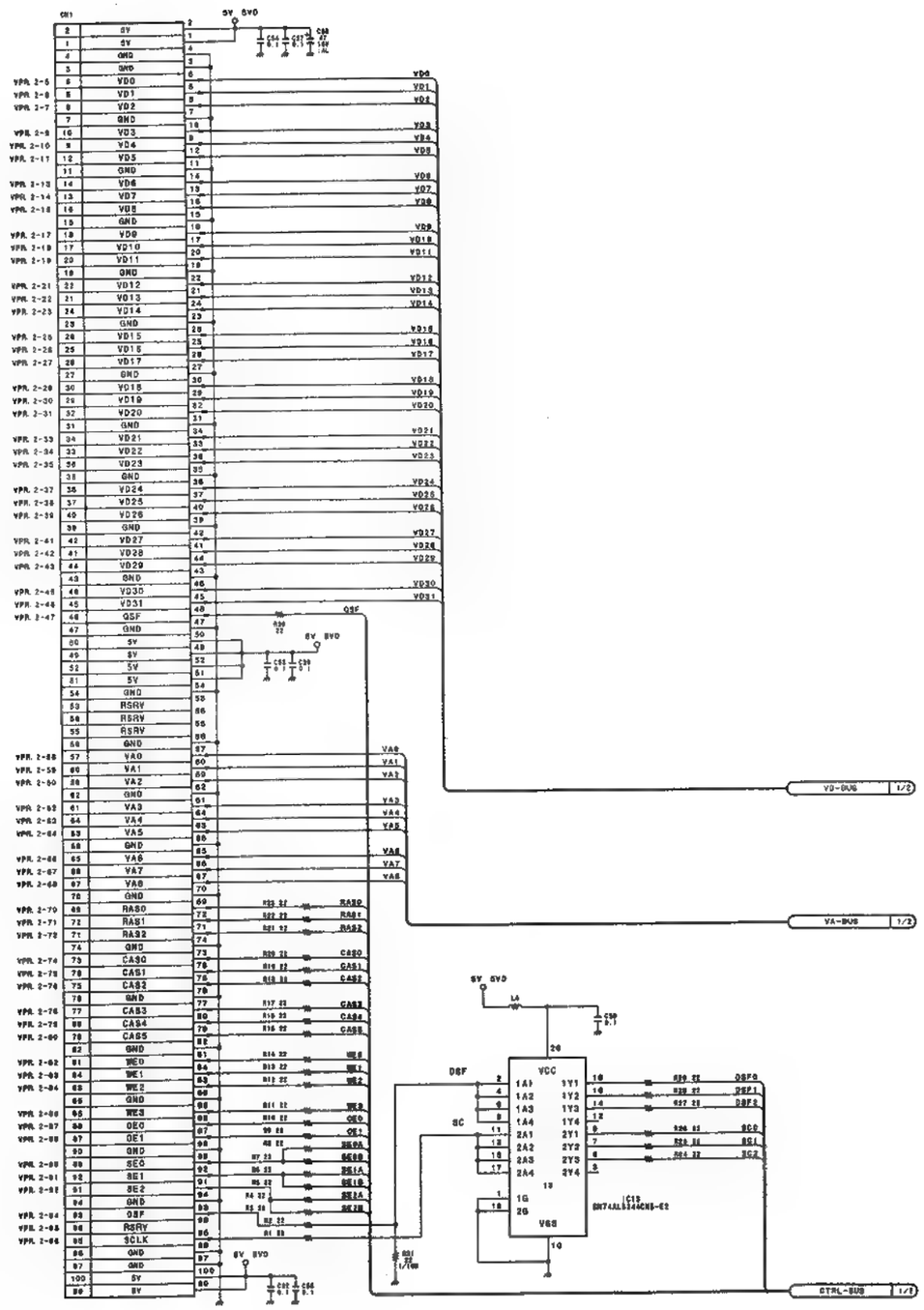

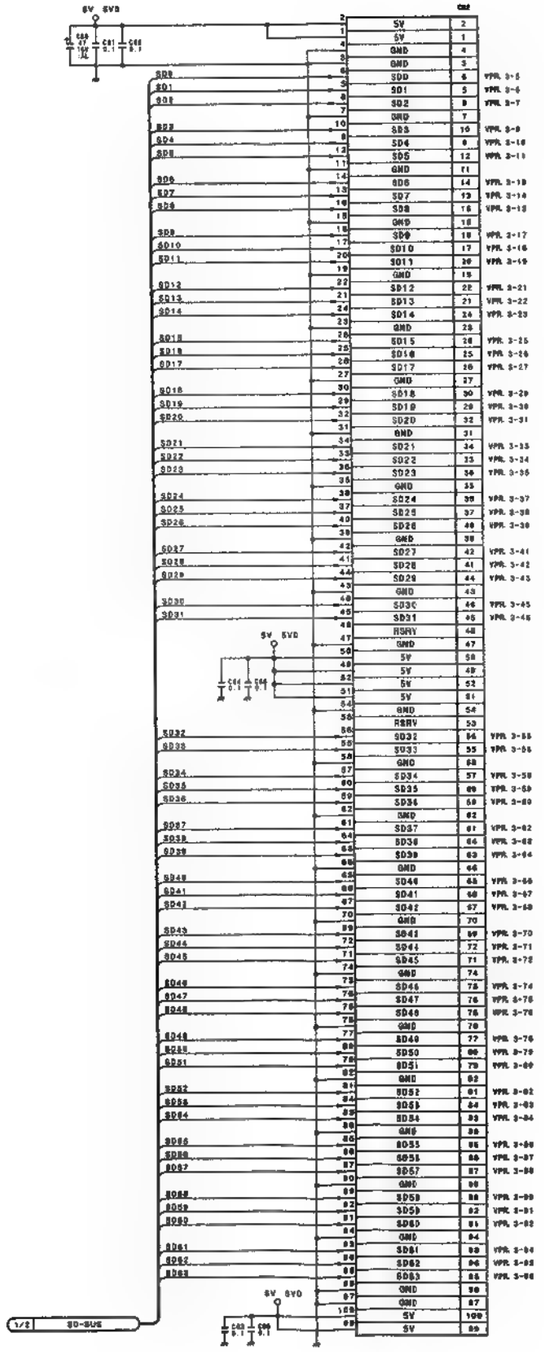

DSC-75/75A (2/2)
PART NO 1-661-187-11
MODEL ES-7
B-ES7-DSC75-11

BUFFER

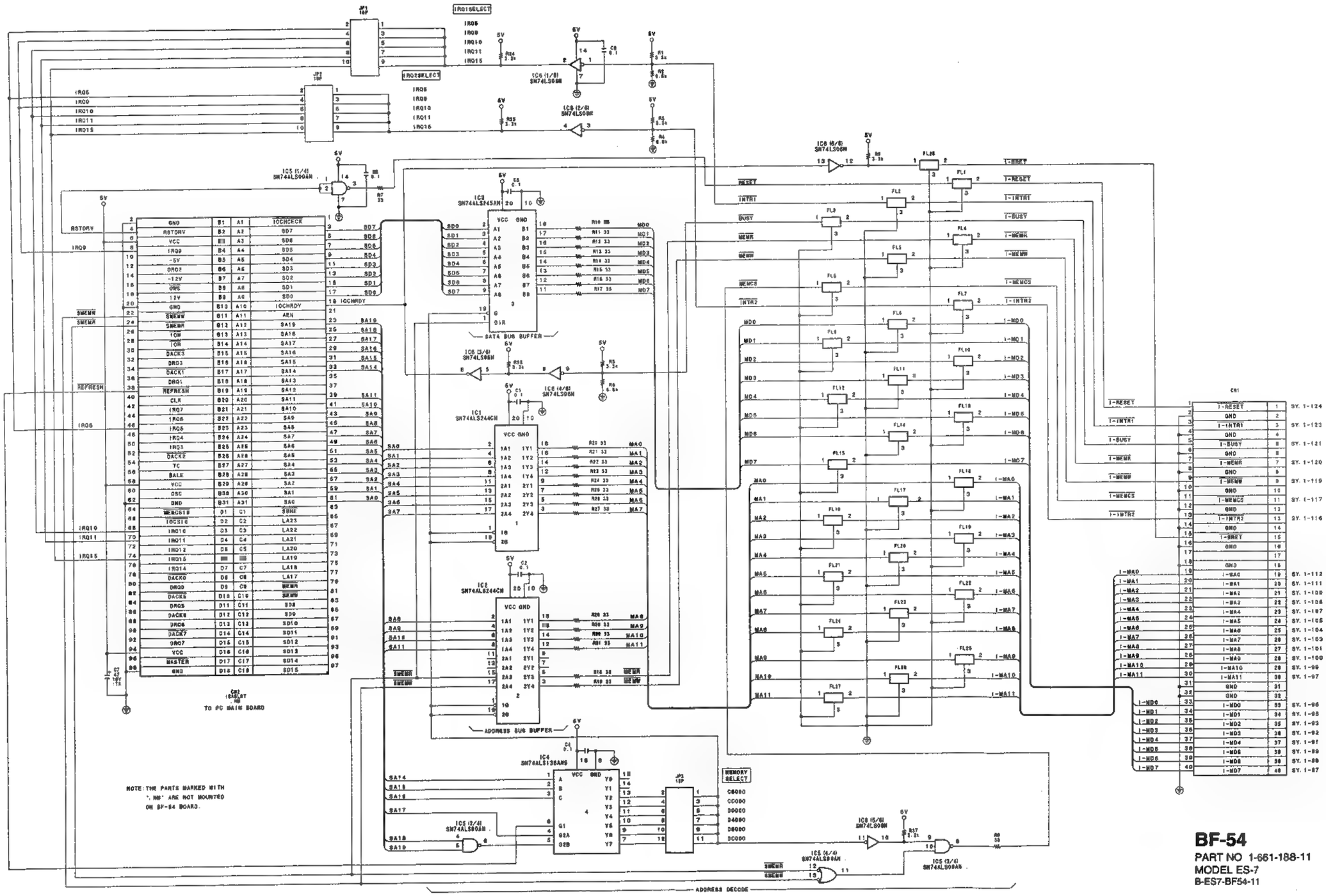

BF-54
PART NO 1-661-188-11
MODEL ES-7
B-ES7-BF54-11

POWER SUPPLY

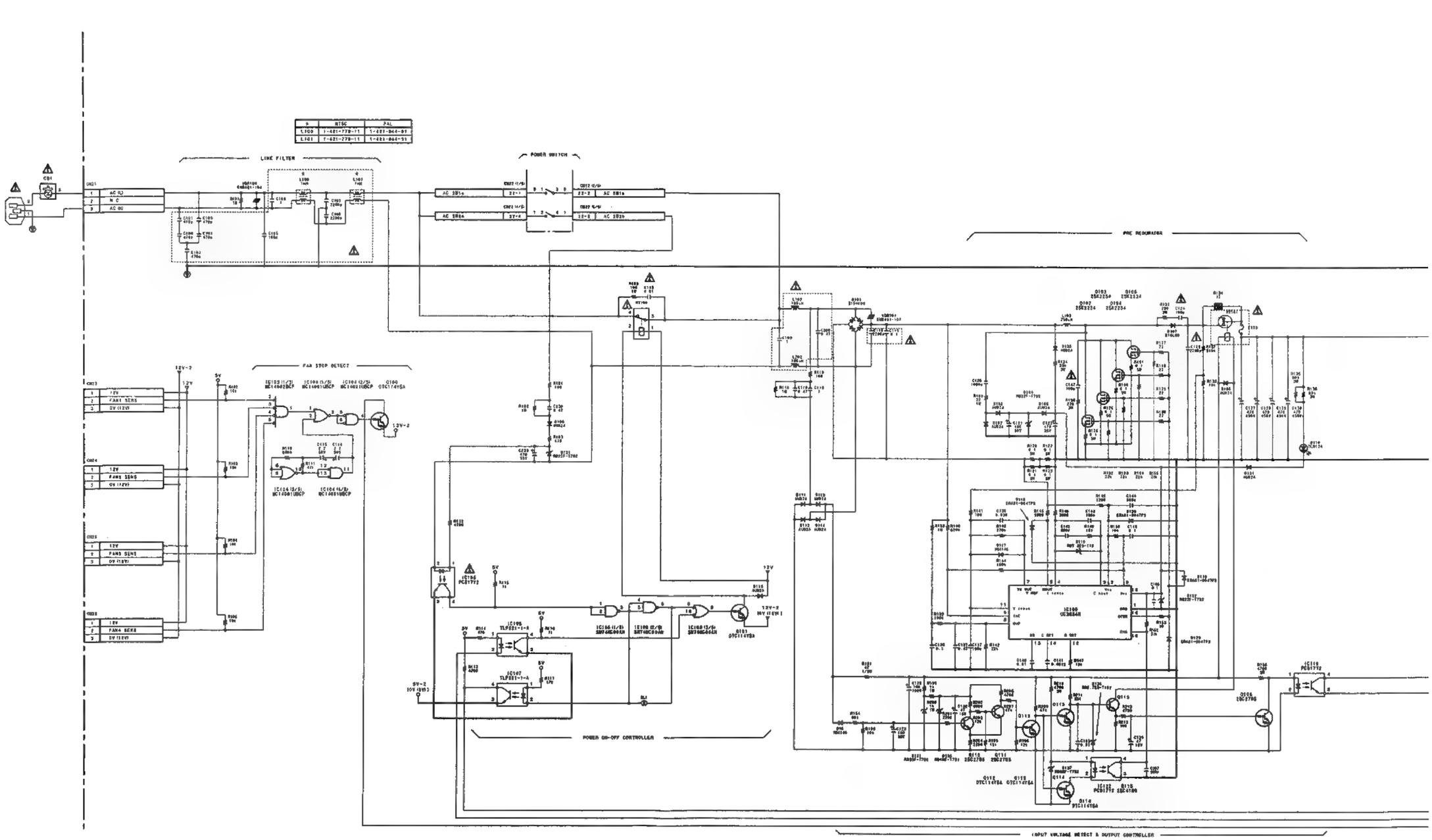

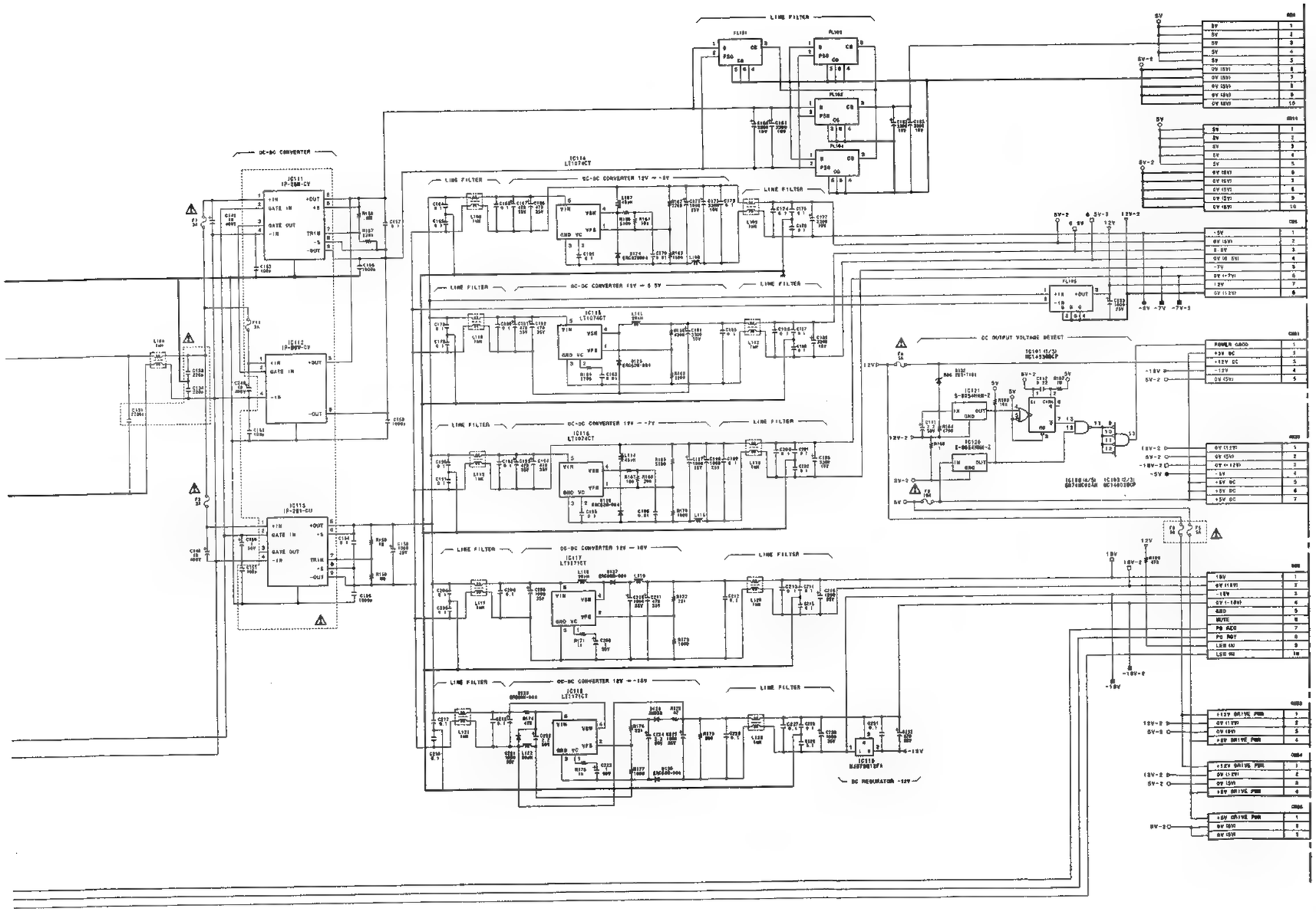

RE-122/122A
PART NO 1-661-121-12
MODEL ES-7
B-ES7-RE122-12

AD-115/115A (3/9)

① TP203 NTSC

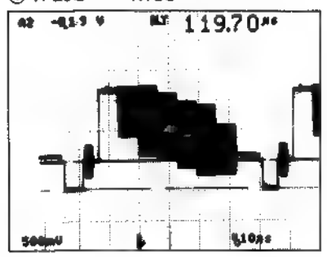

① TP203 PAL

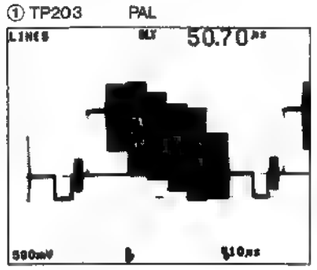

AD-115/115A (4/9)

① TP300 NTSC

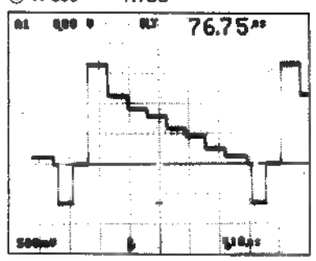

① TP300 PAL

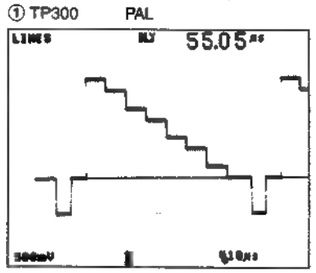

③ TP302 NTSC

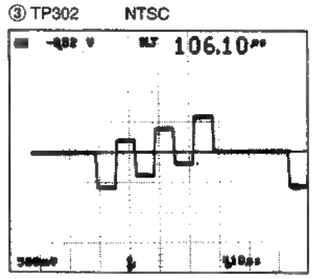

③ TP302 PAL

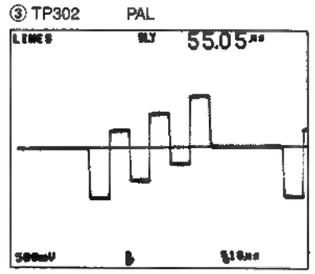

AD-115/115A (6/9)

① TP503 NTSC

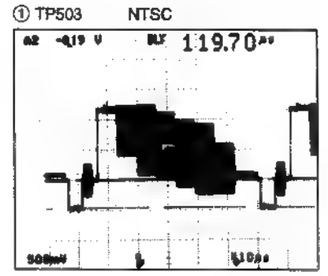

① TP503 PAL

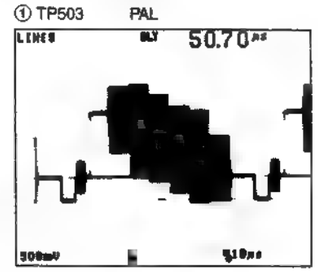

② TP204 NTSC

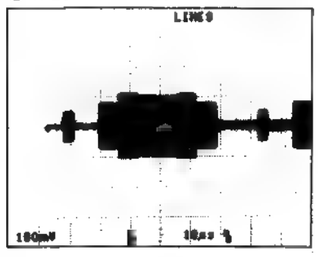

② TP204 PAL

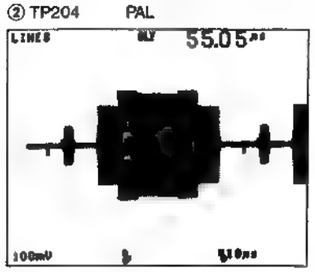

② TP301 NTSC

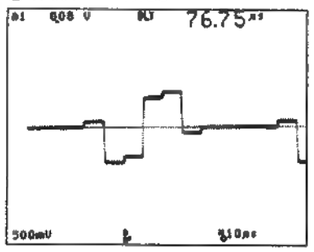

② TP301 PAL

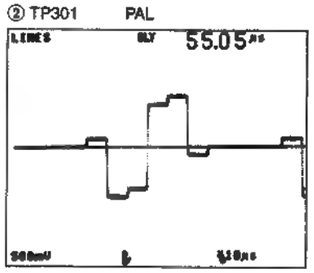

AD-115/115A (5/9)

① TP402

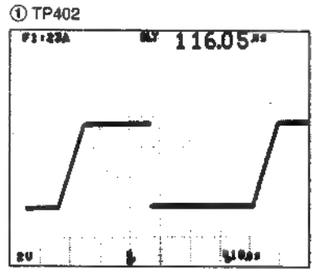

② TP504 NTSC

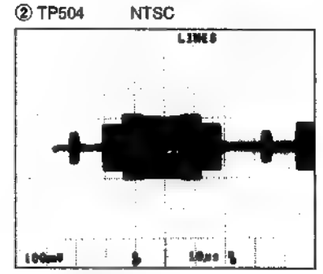

② TP504 PAL

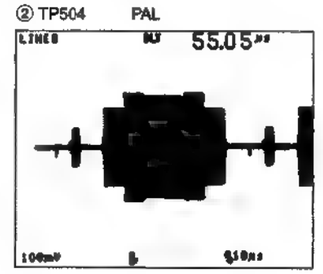

AD-115/115A (7/9)

① TP600 NTSC

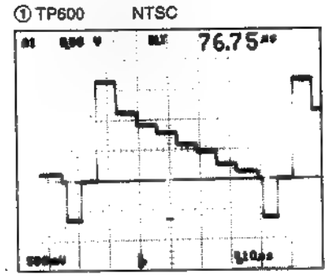

① TP600 PAL

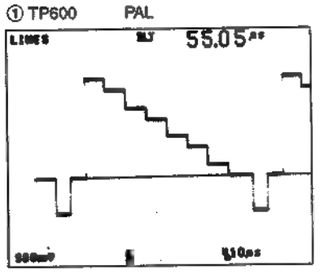

② TP601 NTSC

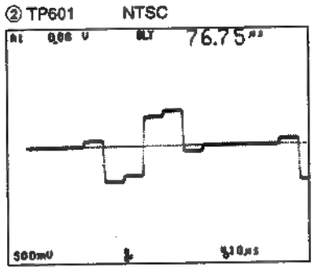

② TP601 PAL

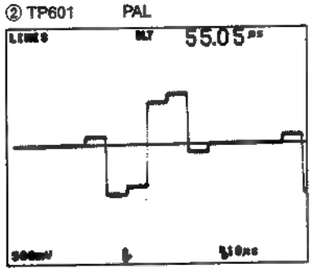

③ TP602 NTSC

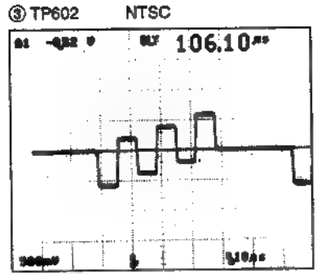

③ TP602 PAL

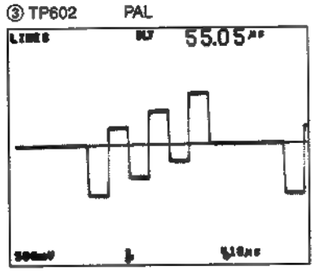

AD-115/115A (8/9)

① TP702 NTSC

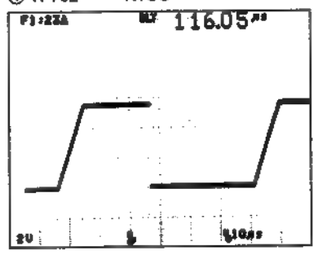

VIN1/VIN2 INPUT SELECT(1)

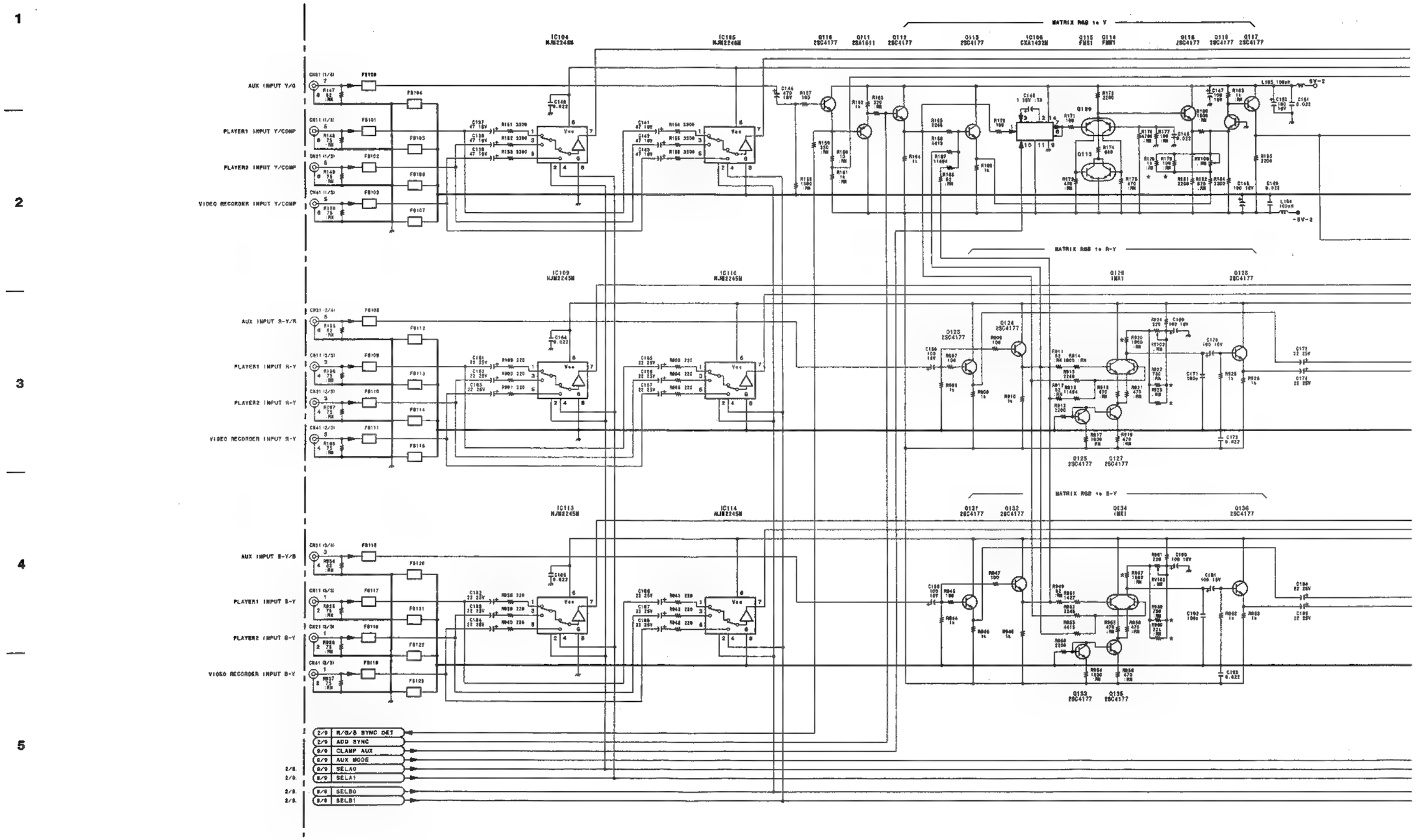

ES-7

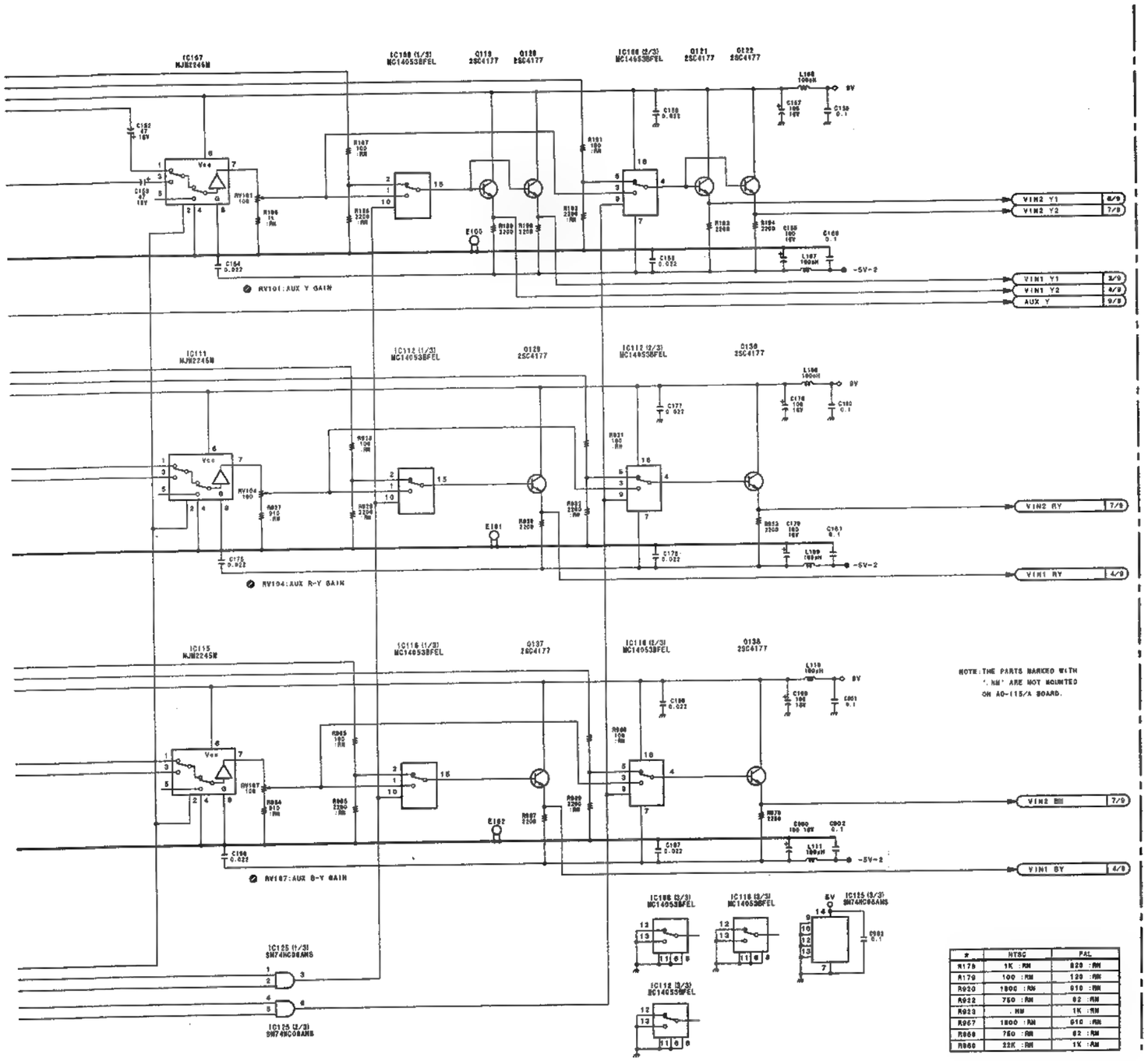

#	NTSC	PAL
R179	1K :RN	820 :RN
R178	100 :RN	120 :RN
R920	1800 :RN	910 :RN
R922	750 :RN	82 :RN
R923	. RN	1K :RN
R967	1800 :RN	910 :RN
R968	750 :RN	82 :RN
R969	22K :RN	1K :RN

AD-115/115A (1/9)
PART NO 1-681-117-12
MODEL ES-7
B-ES7-AD115-12

VIN1/VIN2 INPUT SELECT(2)

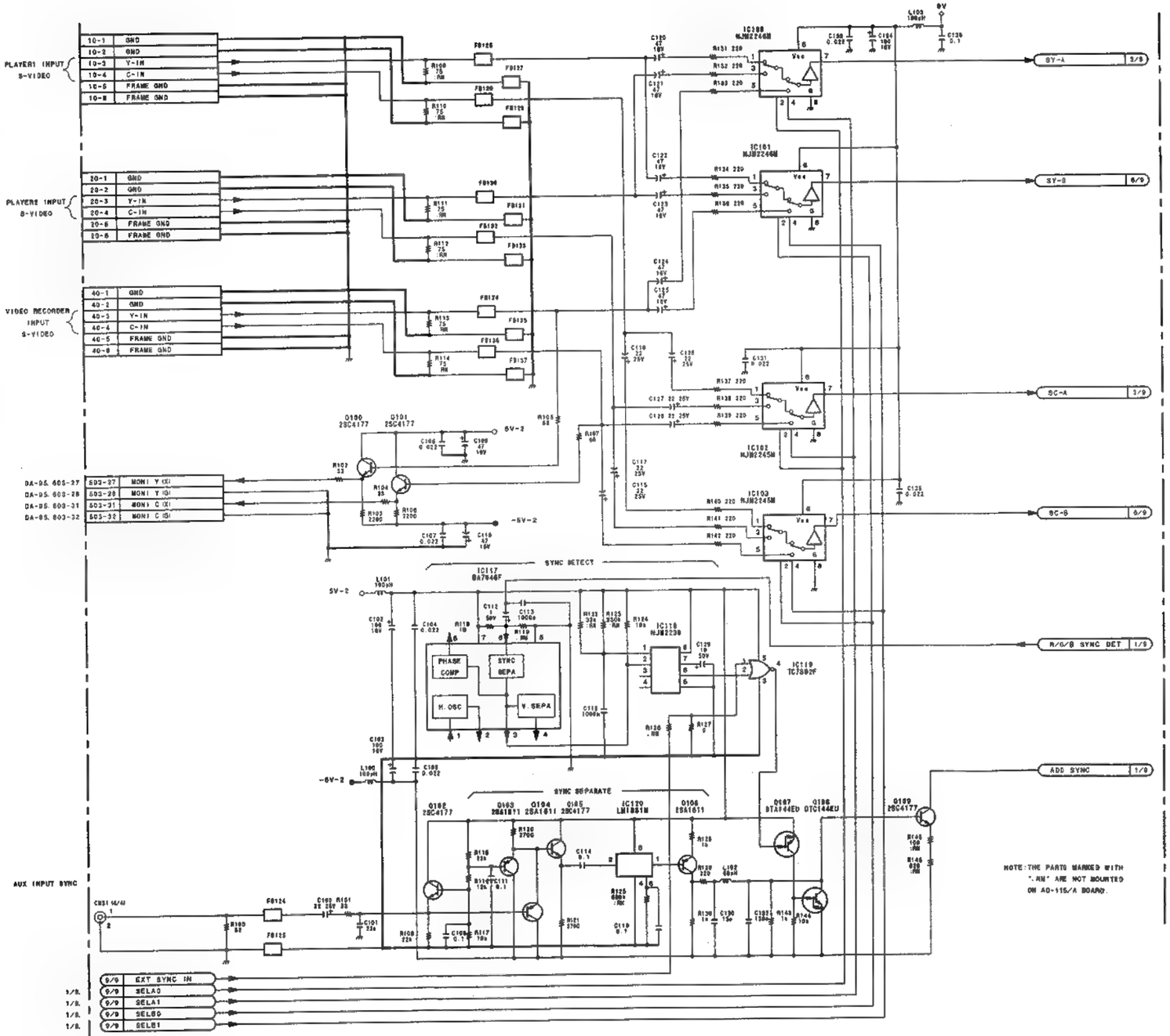

AD-115/115A (2/9)
PART NO 1-661-117-12
MODEL ES-7
B-ES7-AD115-12

VIN1 Y/C SEPARATOR & CHROMA DECODER

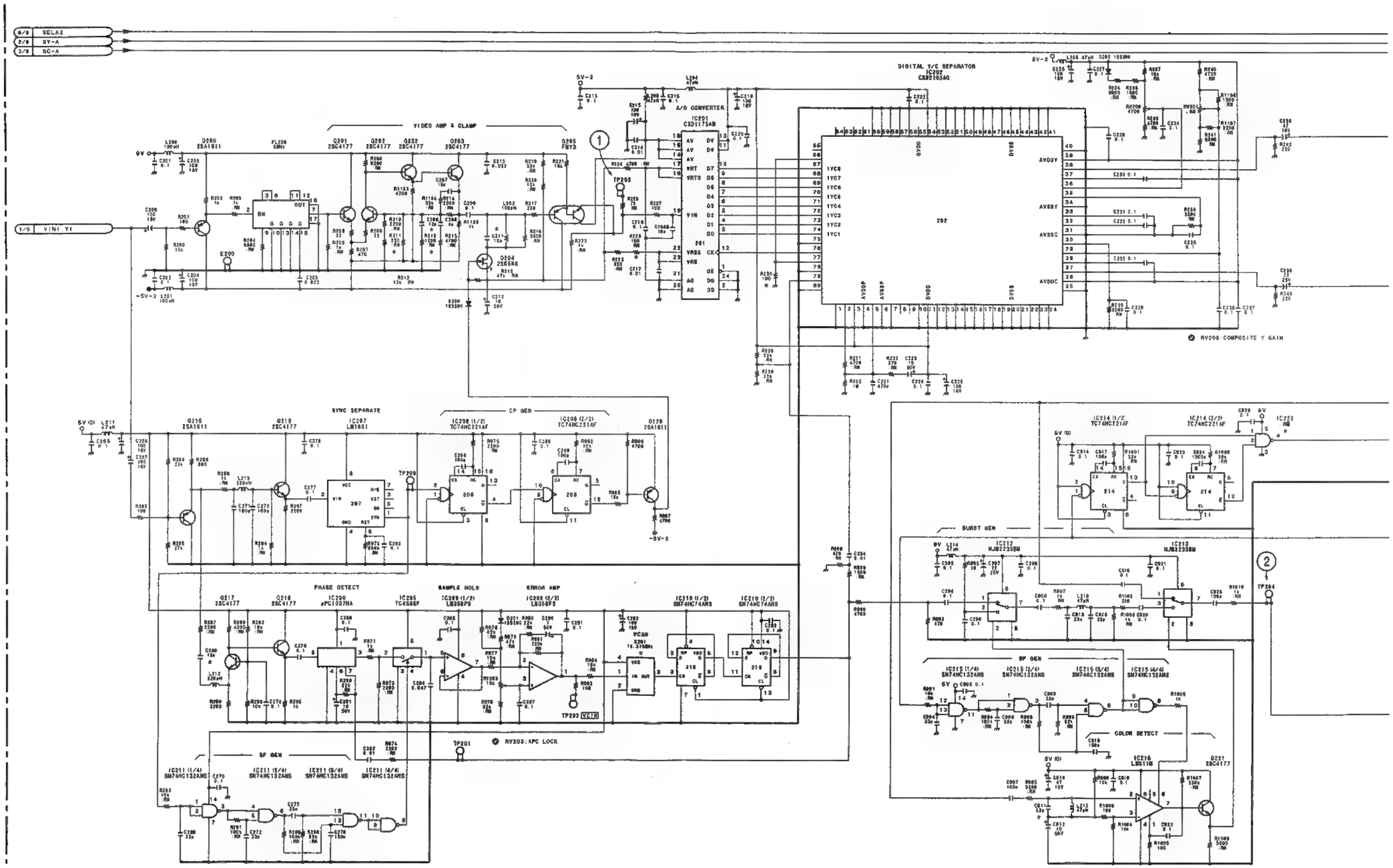

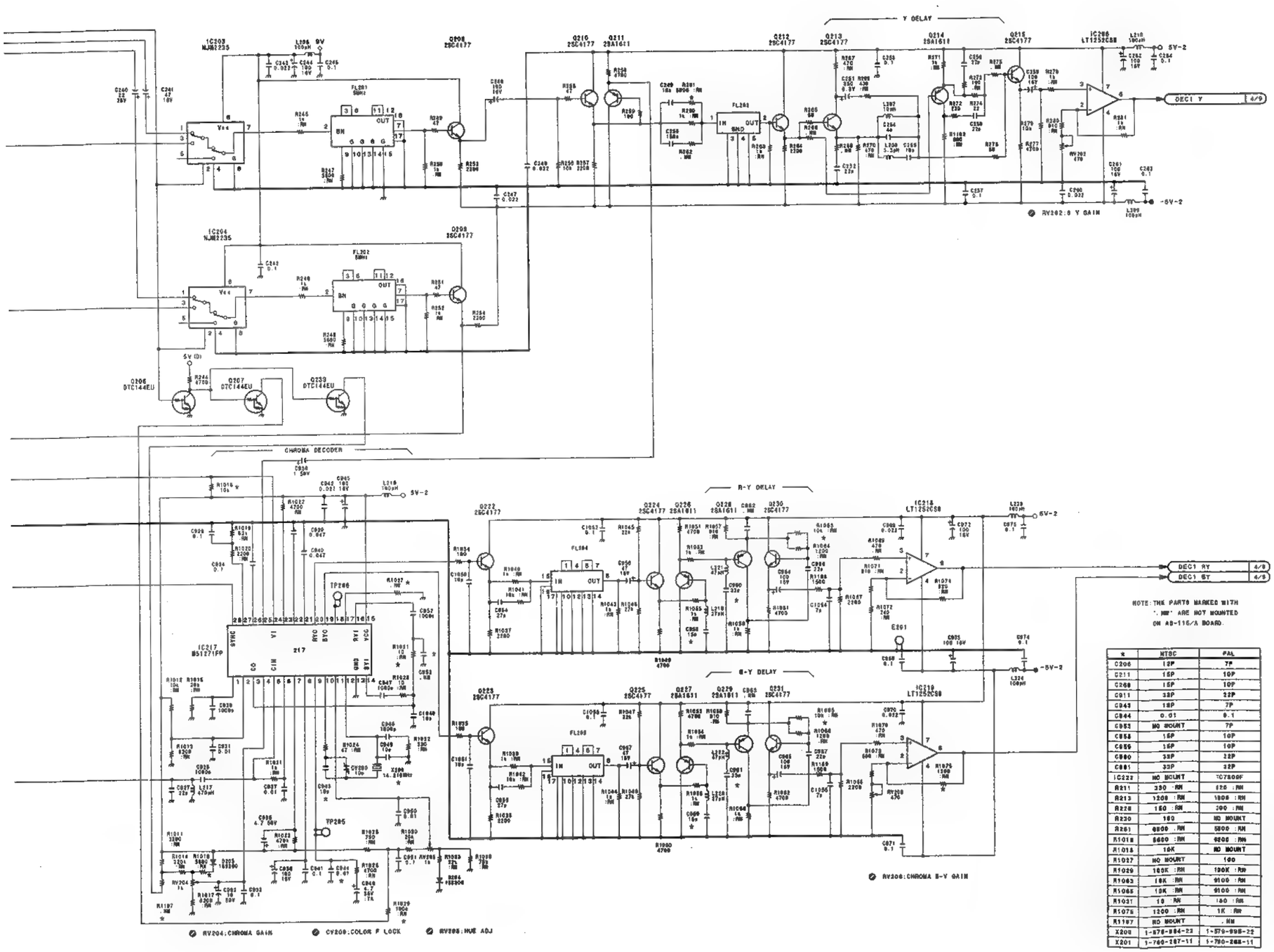

NOTE: THE PARTS MARKED WITH "NM" ARE NOT MOUNTED ON AD-115/A BOARD.

*	NTSC	PAL
C206	12P	7P
C211	15P	10P
C268	15P	10P
C911	33P	22P
C943	18P	7P
C944	0.01	0.1
C953	NO MOUNT	7P
C958	15P	10P
C959	15P	10P
C980	33P	22P
C981	33P	22P
IC222	NO MOUNT	TC7S00F
R211	330 :RN	820 :RN
R213	1200 :RN	1800 :RN
R228	150 :RN	300 :RN
R230	180	NO MOUNT
R261	6800 :RN	5800 :RN
R1018	6800 :RN	6200 :RN
R1018	10K	NO MOUNT
R1027	NO MOUNT	100
R1029	100K :RN	100K :RN
R1063	10K :RN	9100 :RN
R1065	10K :RN	9100 :RN
R1031	10 :RN	180 :RN
R1075	1200 :RN	1K :RN
R1197	NO MOUNT	.NM
X200	1-579-984-23	1-579-995-22
X201	1-760-287-11	1-760-288-11

AD-115/115A (3/9)
PART NO 1-661-117-12
MODEL ES-7
B-ES7-AD115-12

VIN1 A/D CONVERTER

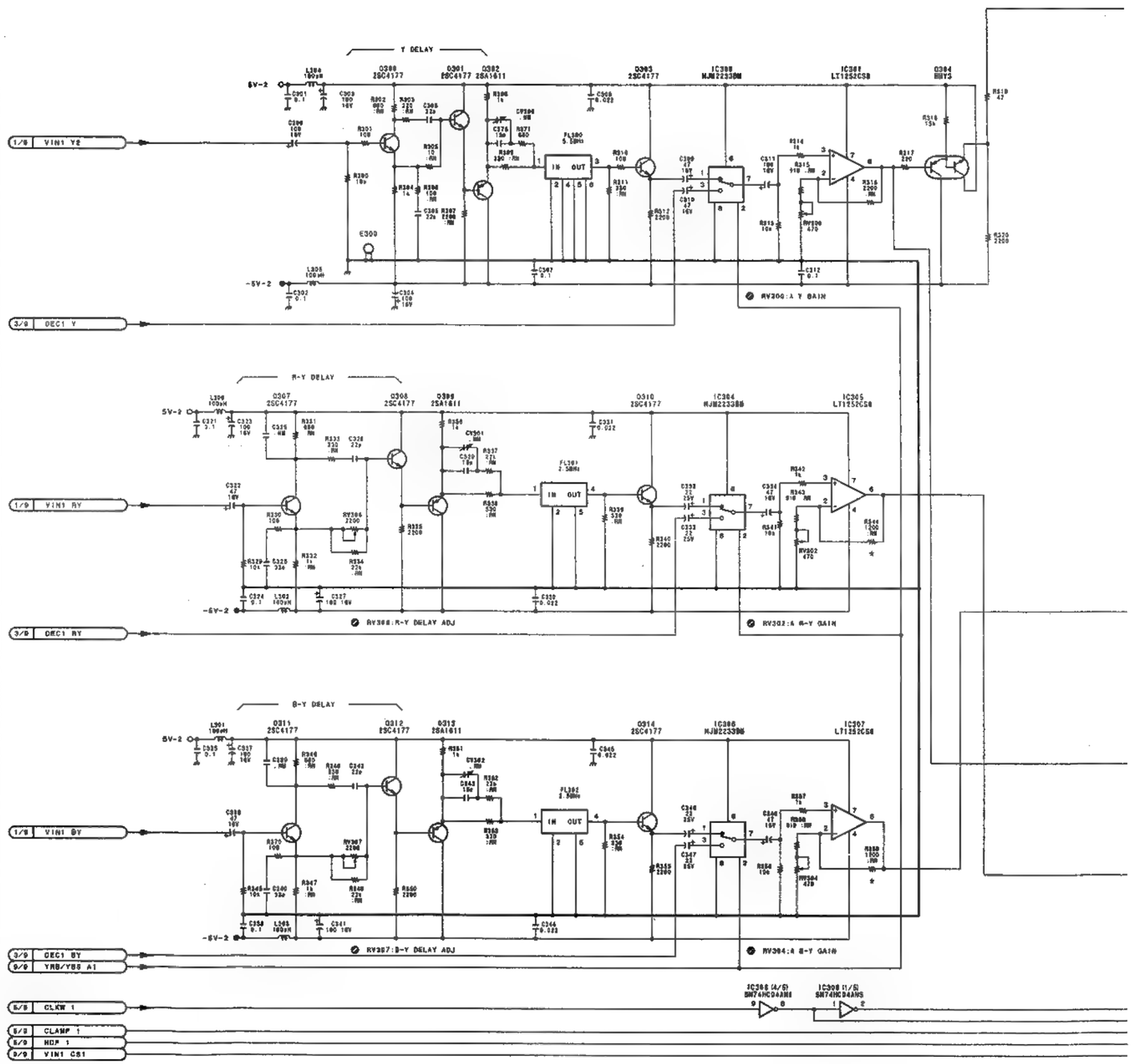

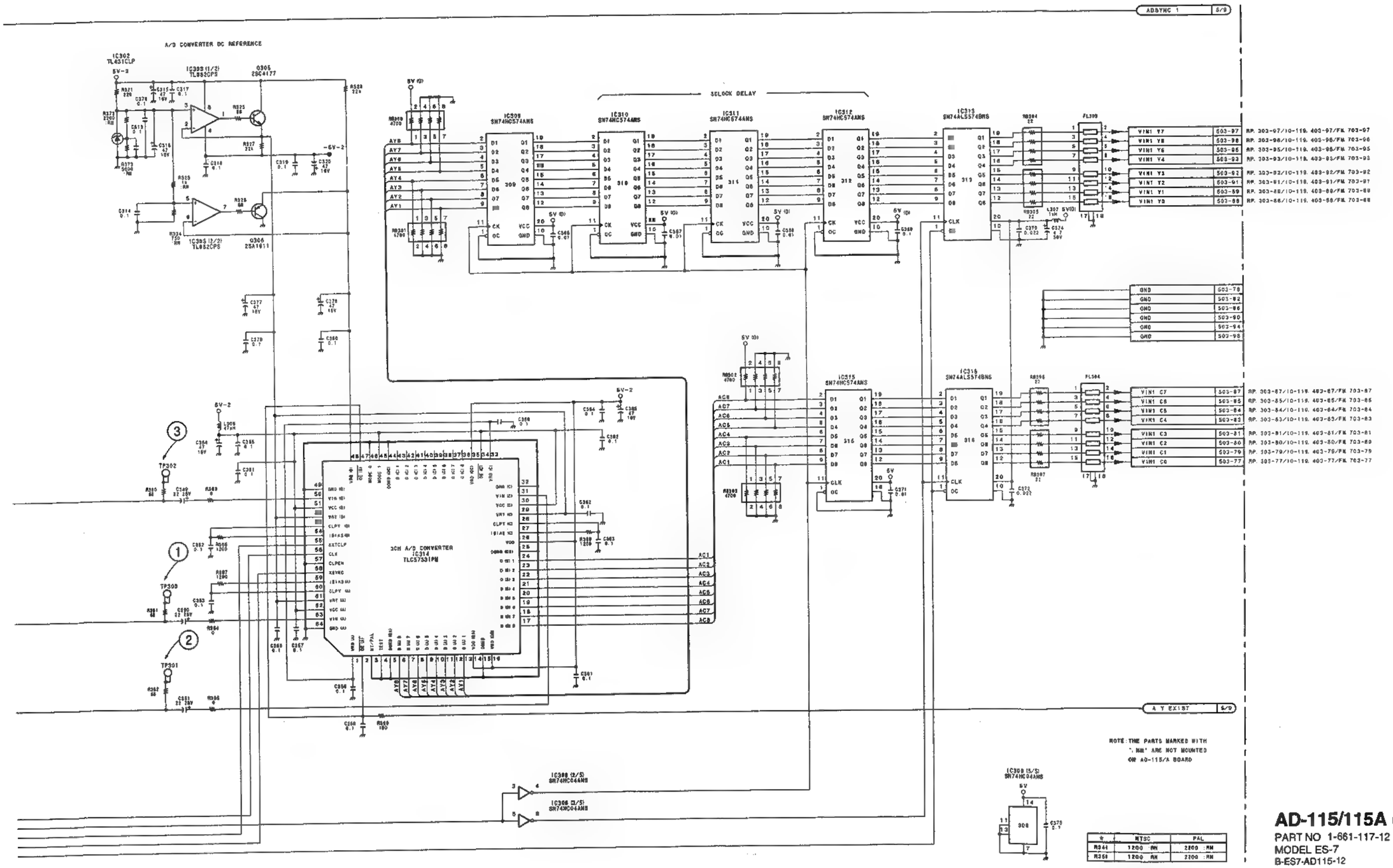
A/D CONVERTER DC REFERENCE
ADSYNC 1 6/9
SELOCK DELAY
3CH A/D CONVERTER IC314 TLC5733IPW
A Y EXIST 6/9
NOTE: THE PARTS MARKED WITH "." ARE NOT MOUNTED ON AD-115/A BOARD
AD-115/115A (4/9)
PART NO 1-661-117-12
MODEL ES-7
B-ES7-AD115-12
2-49
2-49
ES-7

VIN1 WRITE CLOCK GENERATOR

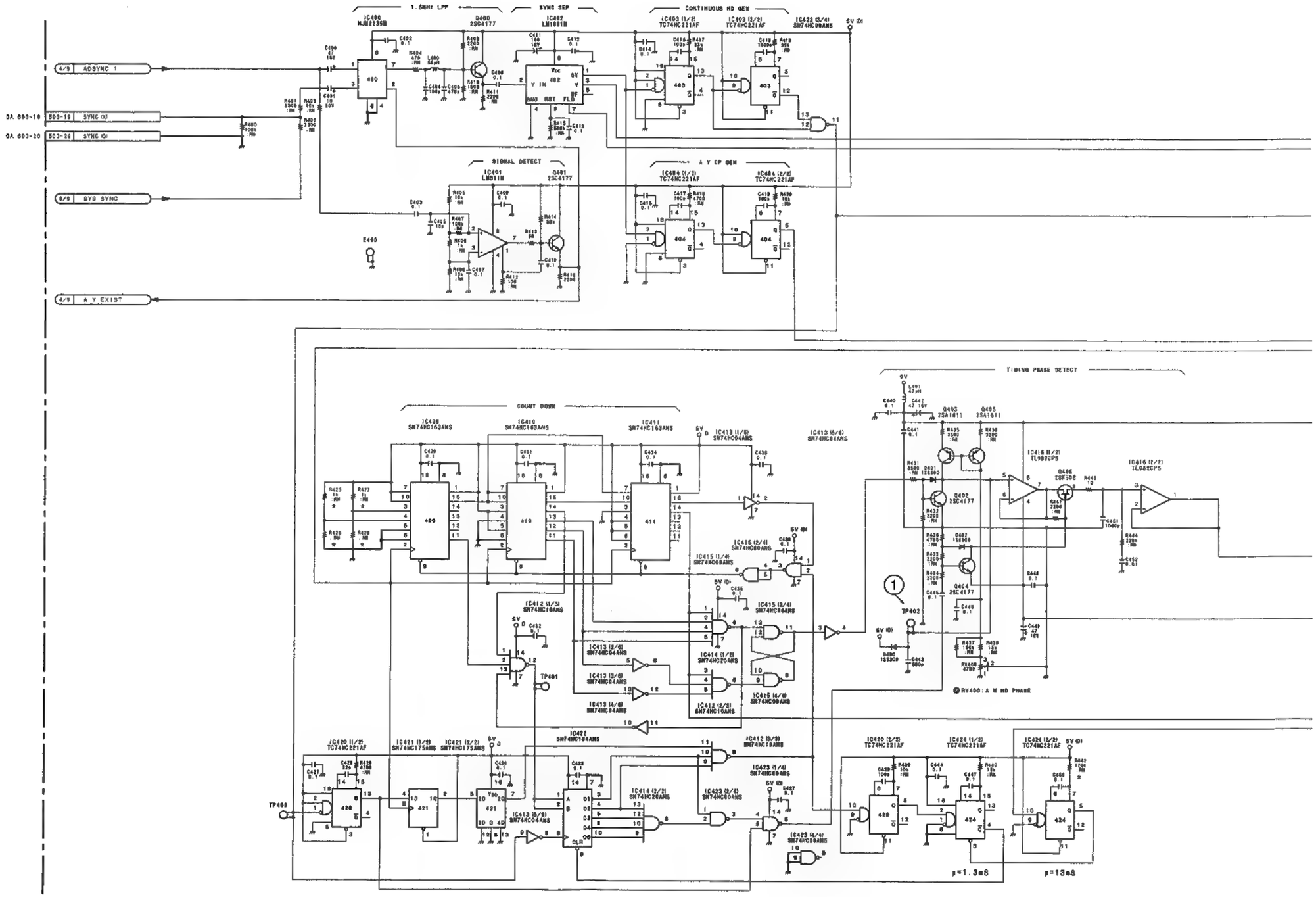

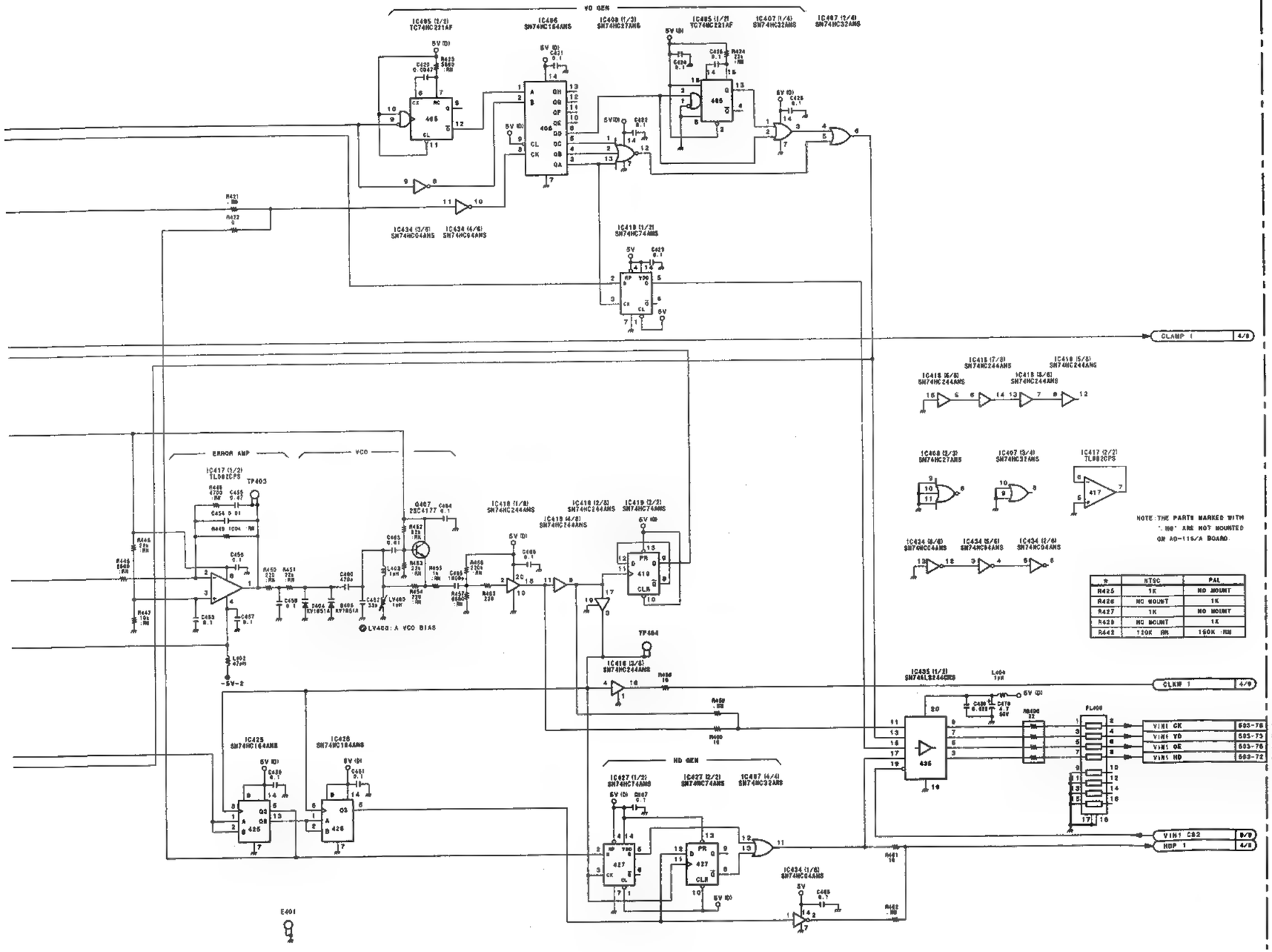

#	NTSC	PAL
R425	1K	NO MOUNT
R426	NO MOUNT	1K
R427	1K	NO MOUNT
R428	NO MOUNT	1K
R442	120K RN	150K RN

AD-115/115A (5/9)
PART NO 1-661-117-12
MODEL ES-7
B-ES7-AD115-12

VIN2 Y/C SEPARATOR & CHROMA DECODER

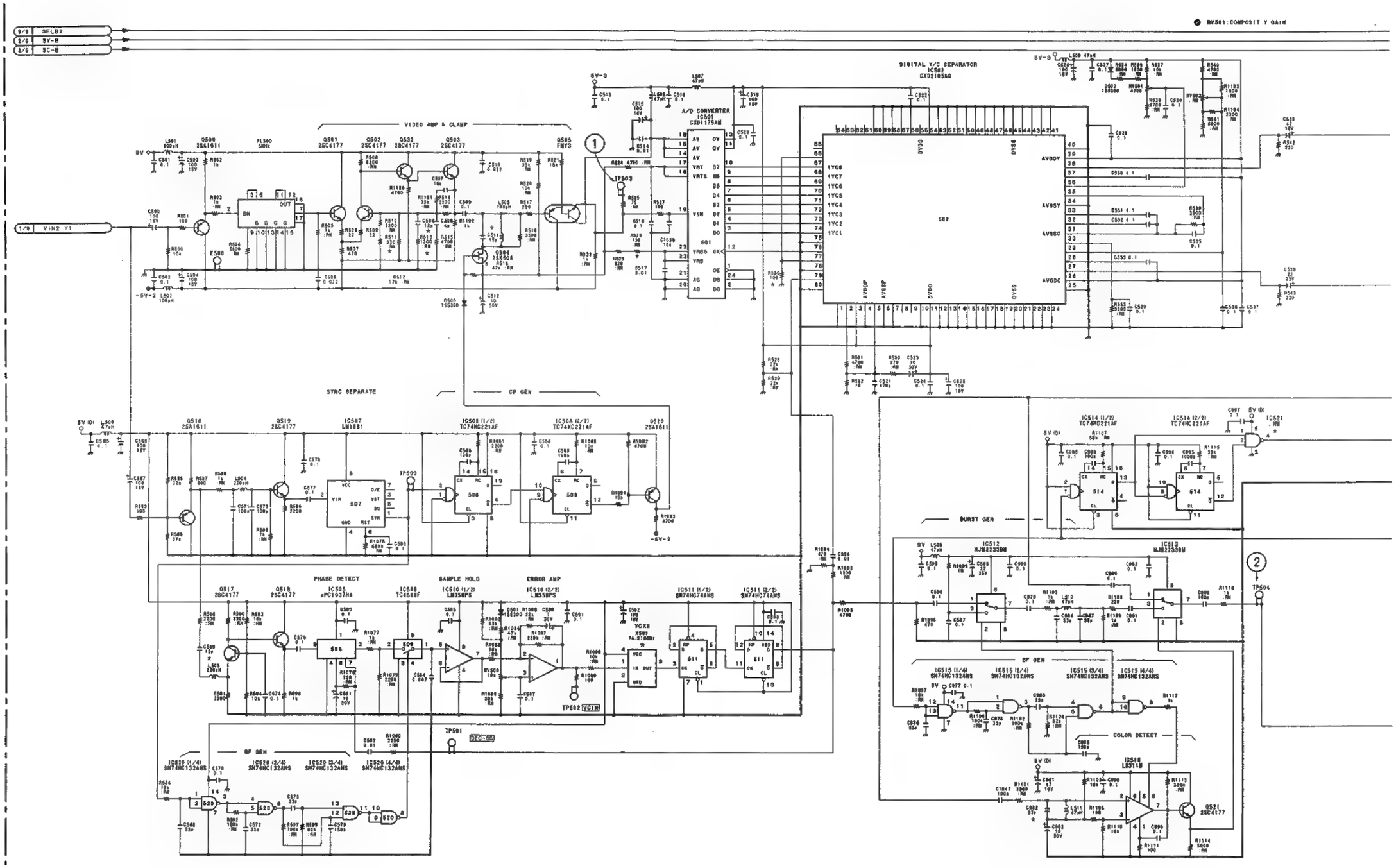

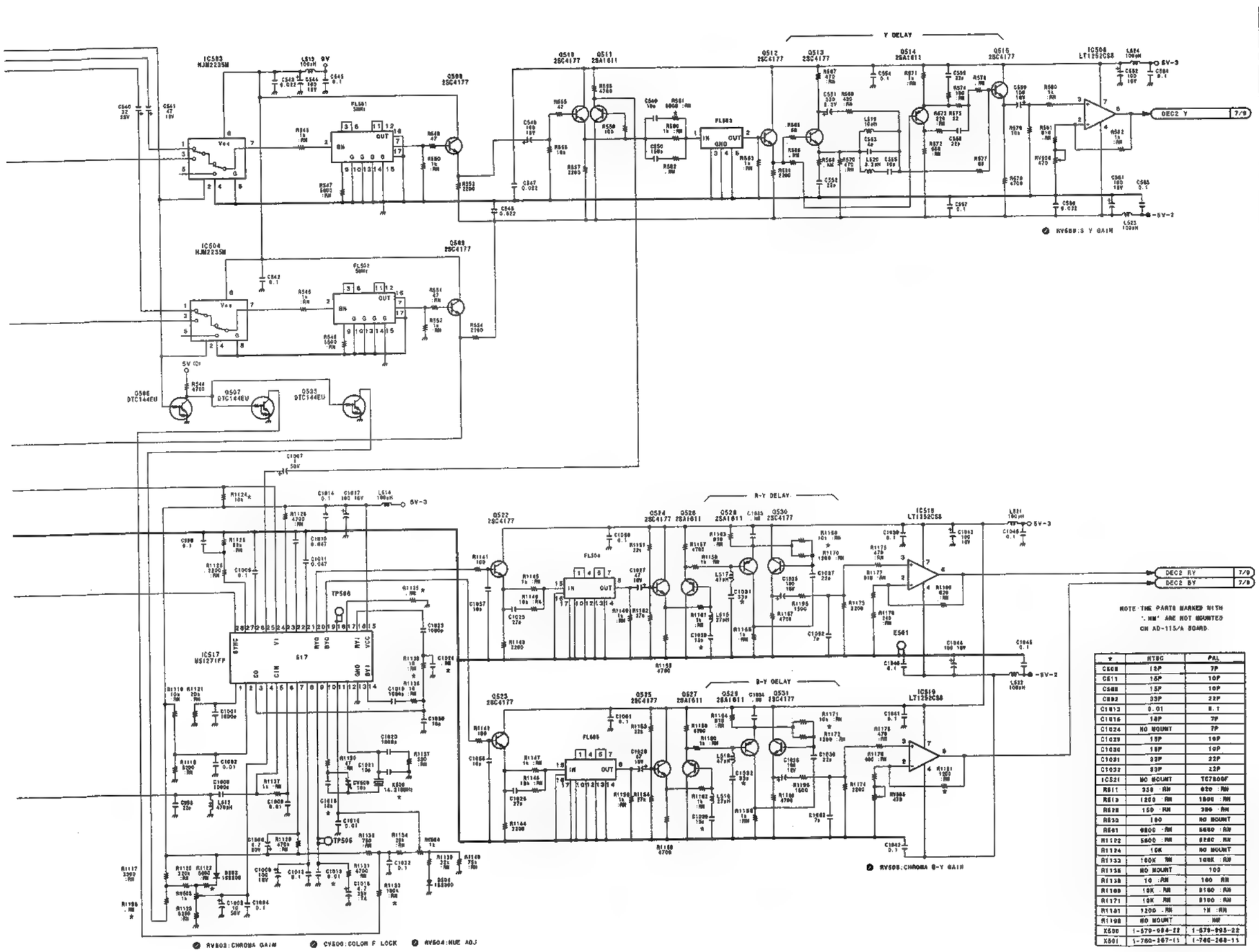

NOTE: THE PARTS MARKED WITH '*' ARE NOT MOUNTED ON AD-115/A BOARD.

*	NTSC	PAL
C508	12P	7P
C511	15P	10P
C588	15P	10P
C592	33P	22P
C1013	0.01	0.1
C1016	12P	7P
C1024	NO MOUNT	7P
C1029	15P	10P
C1030	15P	10P
C1031	33P	22P
C1032	33P	22P
IC521	NO MOUNT	TC7805F
R511	330 :RN	620 :RN
R513	1200 :RN	1800 :RN
R528	150 :RN	390 :RN
R532	180	NO MOUNT
R561	9800 :RN	5600 :RN
R1122	5600 :RN	9200 :RN
R1124	10K	NO MOUNT
R1132	100K :RN	100K :RN
R1135	NO MOUNT	100
R1138	10 :RN	100 :RN
R1169	10K :RN	9100 :RN
R1171	10K :RN	9100 :RN
R1181	1200 :RN	1K :RN
R1198	NO MOUNT	0Ω
X500	1-579-984-22	1-579-993-22
X501	1-760-367-11	1-760-368-11

AD-115/115A (6/9)
PART NO 1-661-117-12
MODEL ES-7
B-ES7-AD115-12

VIN2 A/D CONVERTER

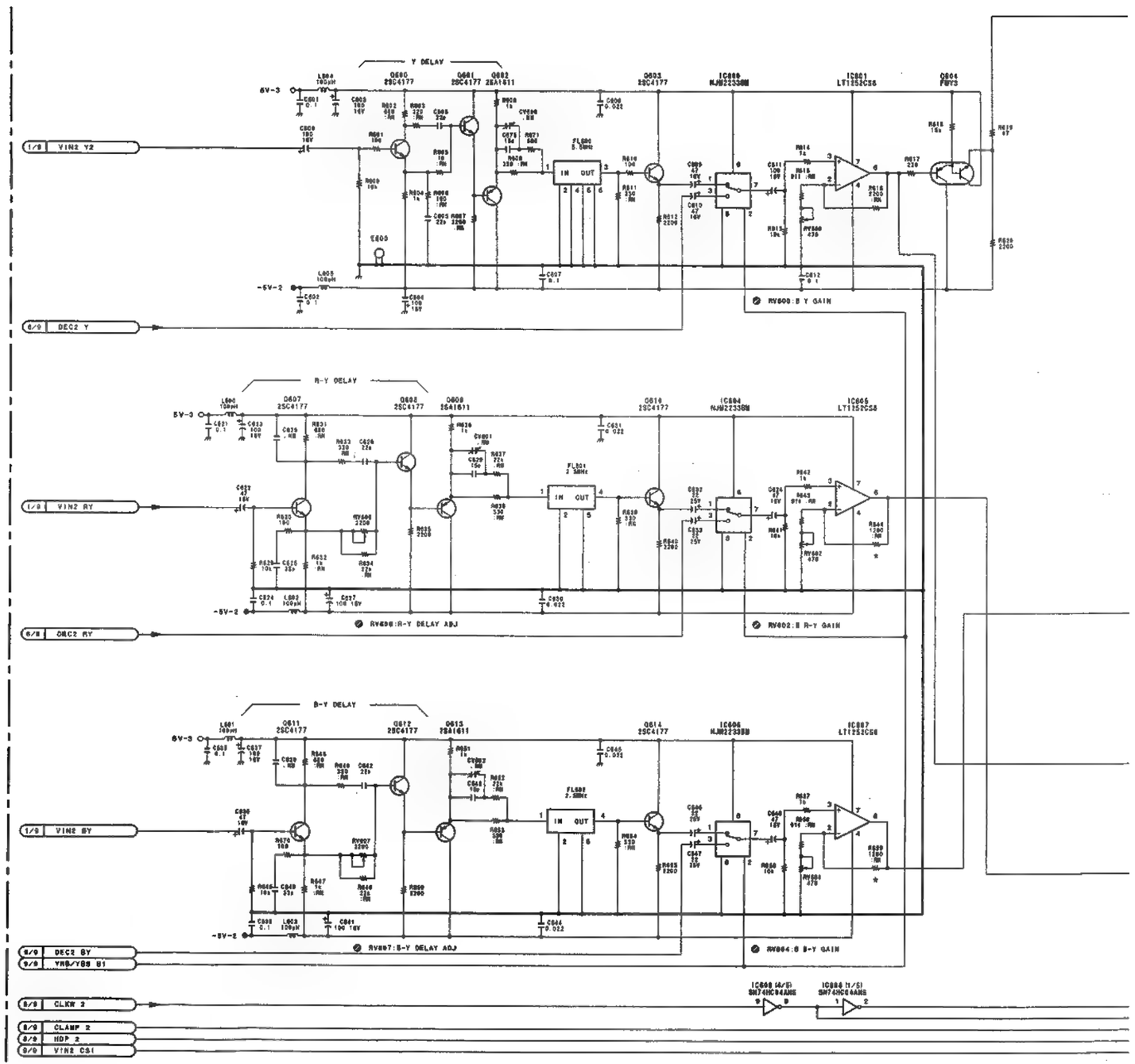

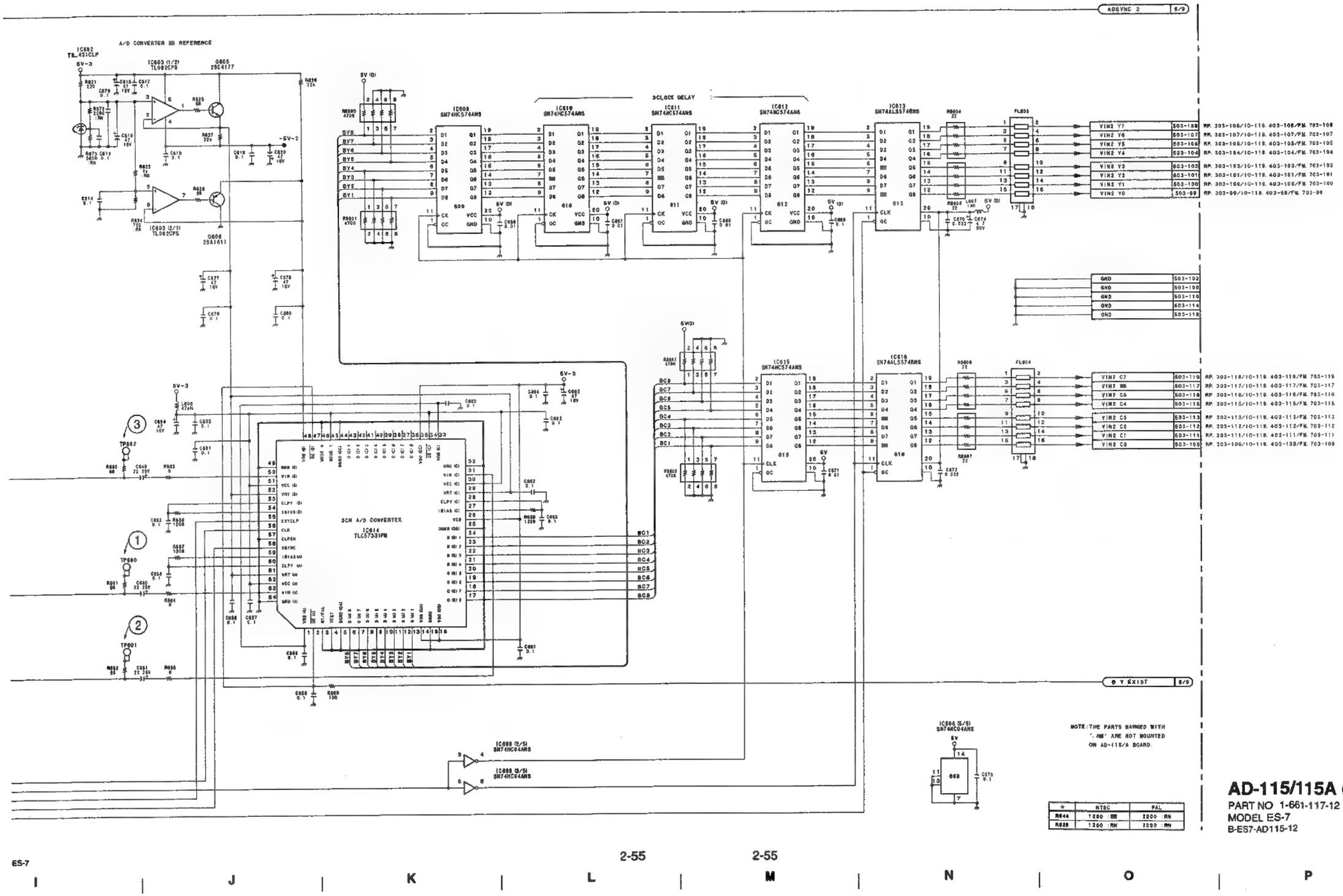
A/D CONVERTER ■ REFERENCE
ADSYNC 2
6/9
3CLOCK DELAY
3CH A/D CONVERTER
IC614
TLC5733IPW
IC608 SN74HC574ANS
IC609 SN74HC574ANS
IC610 SN74HC574ANS
IC611 SN74HC574ANS
IC612 SN74HC574ANS
IC613 SN74ALS574BNS
IC615 SN74HC574ANS
IC616 SN74ALS574BNS
IC602 TL431CLP
IC603 (1/2) TL082CP
IC603 (2/2) TL082CP
Q605 2SC4177
Q606 2SA1611
IC606 (2/5) SN74HC04ANS
IC606 (3/5) SN74HC04ANS
IC606 (5/5) SN74HC04ANS
VIN2 Y7 503-108 RP. 303-108/10-119, 403-108/FM. 703-108
VIN2 Y6 503-107 RP. 303-107/10-119, 403-107/FM. 703-107
VIN2 Y5 503-106 RP. 303-106/10-119, 403-106/FM. 703-106
VIN2 Y4 503-104 RP. 303-104/10-119, 403-104/FM. 703-104
VIN2 Y3 503-103 RP. 303-103/10-119, 403-103/FM. 703-103
VIN2 Y2 503-101 RP. 303-101/10-119, 403-101/FM. 703-101
VIN2 Y1 503-100 RP. 303-100/10-119, 403-100/FM. 703-100
VIN2 Y0 503-99 RP. 303-99/10-119, 403-99/FM. 703-99
GND 503-102
GND 503-105
GND 503-110
GND 503-114
GND 503-118
VIN2 C7 503-119 RP. 303-119/10-119, 403-119/FM. 703-119
VIN2 C6 503-117 RP. 303-117/10-119, 403-117/FM. 703-117
VIN2 C5 503-116 RP. 303-116/10-119, 403-116/FM. 703-116
VIN2 C4 503-115 RP. 303-115/10-119, 403-115/FM. 703-115
VIN2 C3 503-113 RP. 303-113/10-119, 403-113/FM. 703-113
VIN2 C2 503-112 RP. 303-112/10-119, 403-112/FM. 703-112
VIN2 C1 503-111 RP. 303-111/10-119, 403-111/FM. 703-111
VIN2 C0 503-109 RP. 303-109/10-119, 403-109/FM. 703-109
6 Y EXIST 8/9
NOTE: THE PARTS MARKED WITH '*' ARE NOT MOUNTED ON AD-115/A BOARD.
* NTSC PAL
R644 1200 :■■ 1200 :RN
R629 1200 :RN 1200 :RN
AD-115/115A (7/9)
PART NO 1-661-117-12
MODEL ES-7
B-ES7-AD115-12

VIN2 WRITE CLOCK GENERATOR

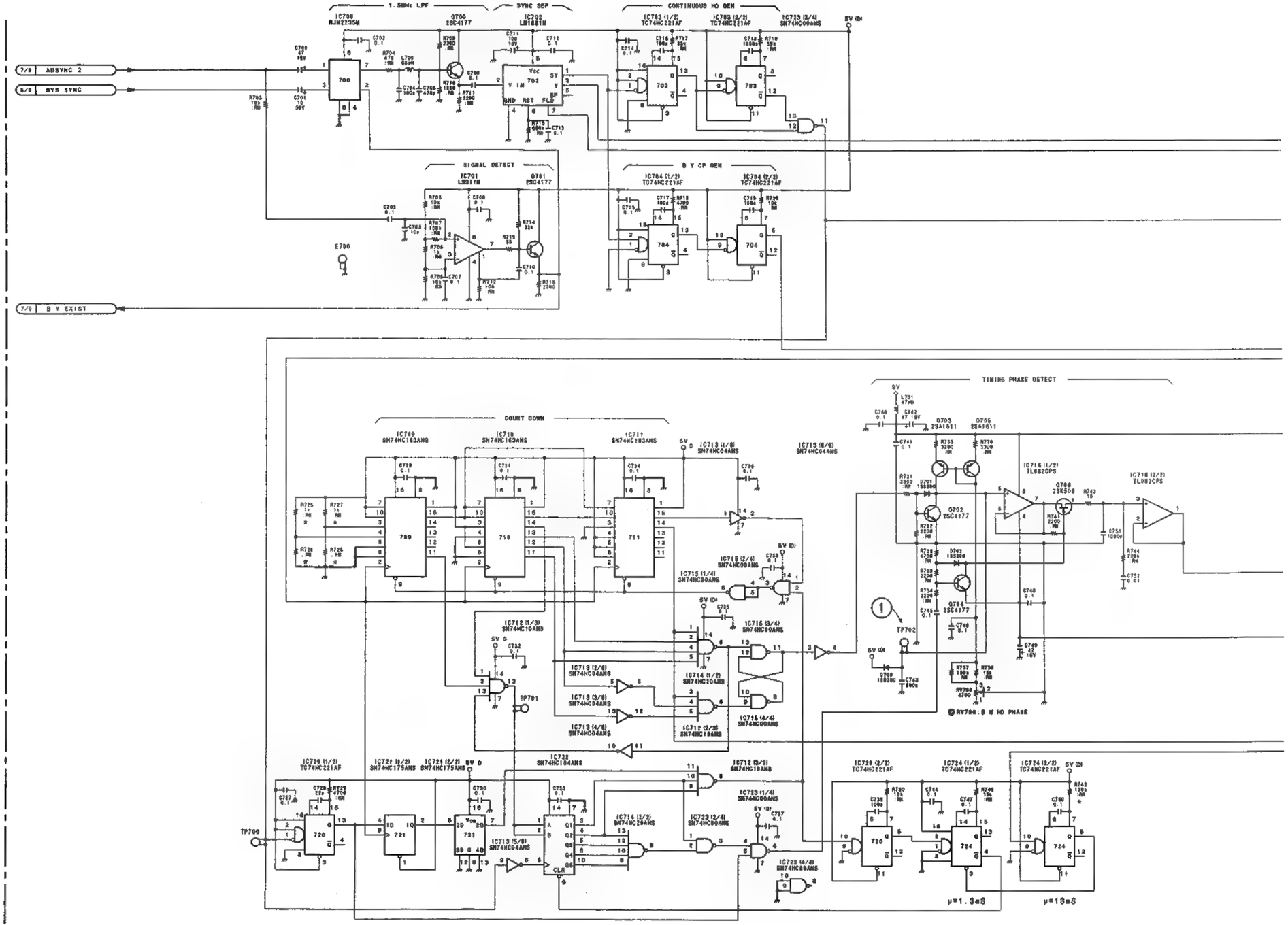

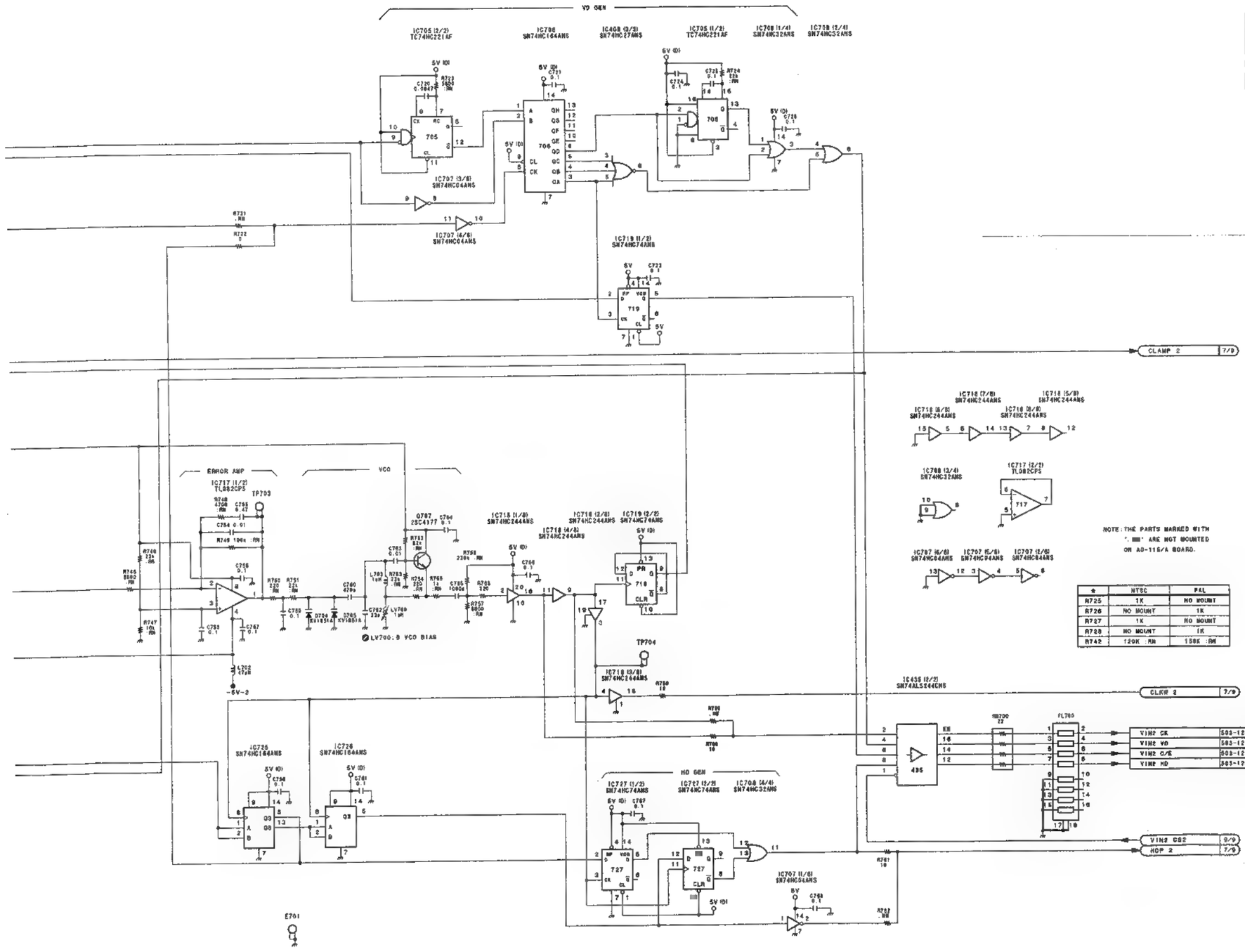

NOTE: THE PARTS MARKED WITH "*" ARE NOT MOUNTED ON AD-115/A BOARD.

*	NTSC	PAL
R725	1K	NO MOUNT
R726	NO MOUNT	1K
R727	1K	NO MOUNT
R728	NO MOUNT	1K
R742	120K :RN	150K :RN

AD-115/115A (8/9)
PART NO 1-661-117-12
MODEL ES-7
B-ES7-AD115-12

VOLTAGE REG & MODE CONTROL I/F

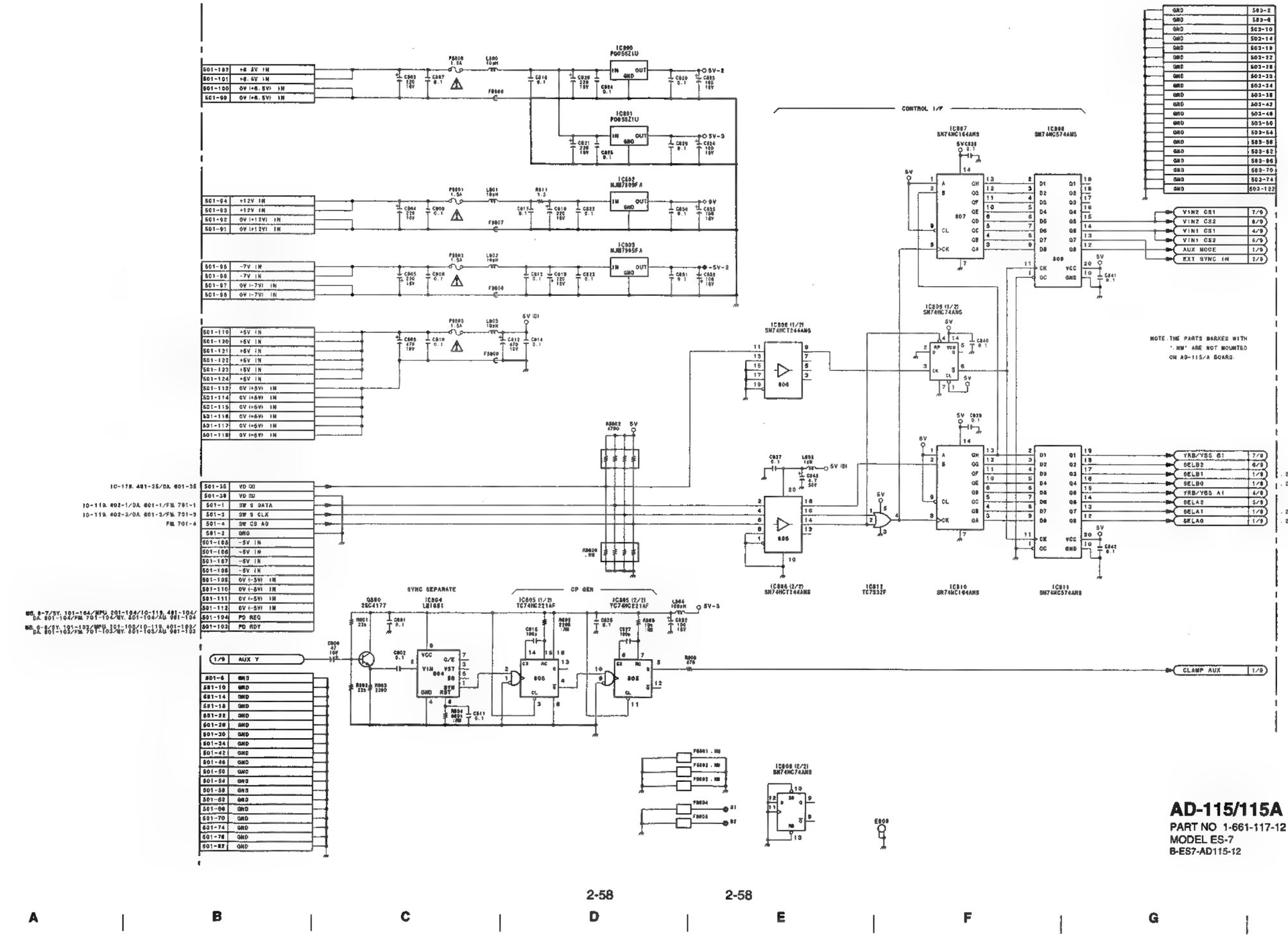

AD-115/115A (9/9)
PART NO 1-661-117-12
MODEL ES-7
B-ES7-AD115-12

DA-95/95A (1/6)

① TP100

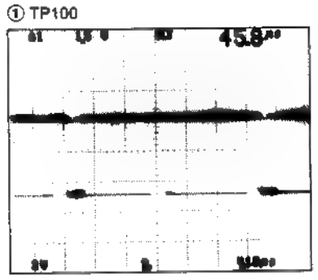

② TP101

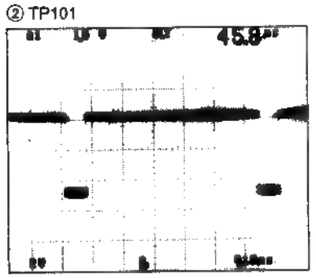

③ TP102
④ TP103

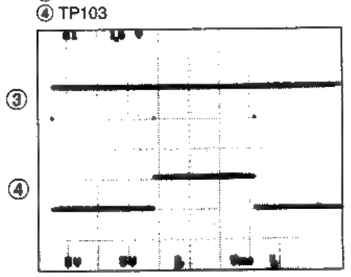

⑤ TP107

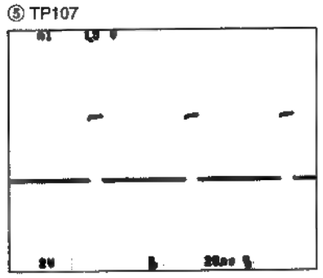

DA-95/95A (2/6)

① TP300 NTSC

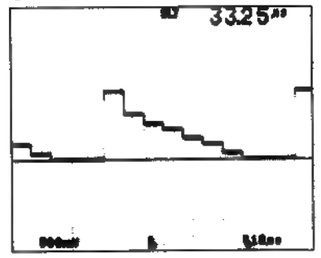

① TP300 PAL

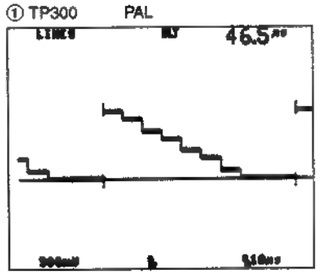

② TP301 NTSC

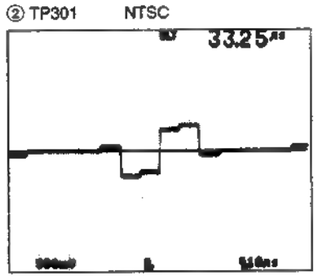

② TP301 PAL

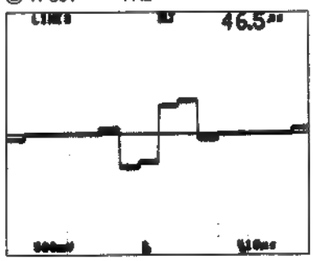

③ TP302 NTSC

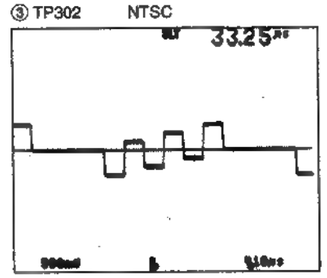

③ TP302 PAL

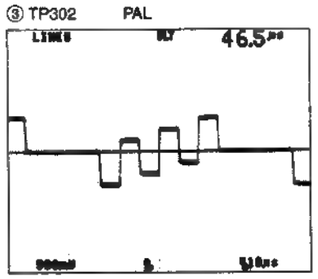

DA-95/95A (3/6)

① TP400 NTSC

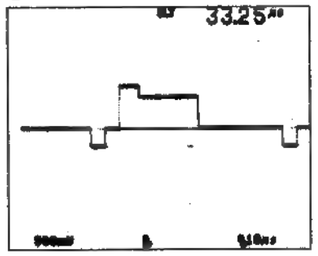

① TP400 PAL

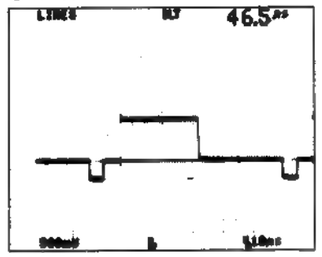

② TP401 NTSC

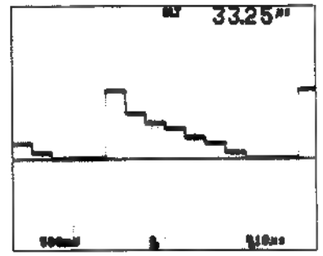

② TP401 PAL

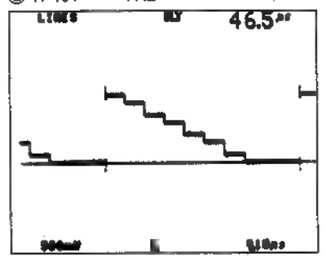

③ TP402/403 NTSC

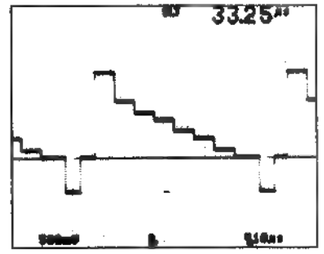

③ TP402/403 PAL

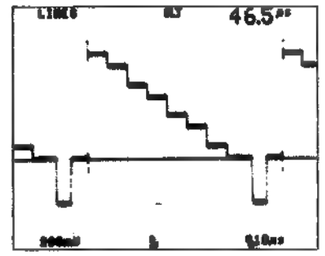

DA-95/95A (4/6)

④ TP404 NTSC

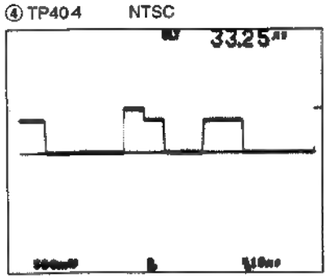

⑥ TP408 NTSC

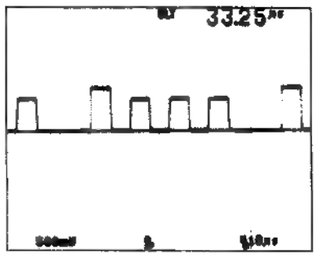

① TP600/601/611 NTSC

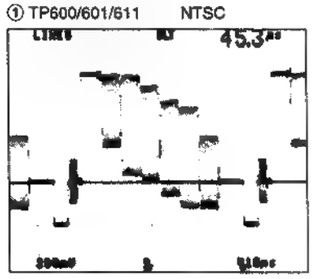

③ TP604/606 NTSC

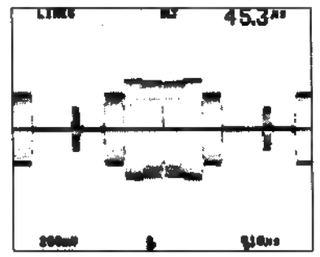

④ TP404 PAL

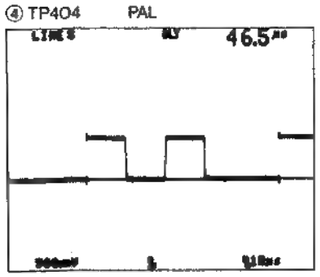

⑥ TP408 PAL

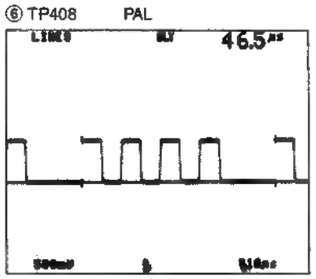

① TP600/601/611 PAL

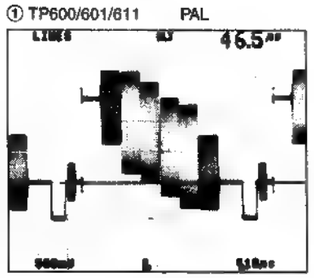

③ TP604/606 PAL

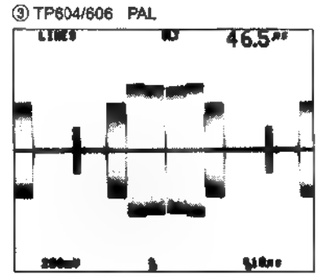

⑤ TP405/406/407 NTSC

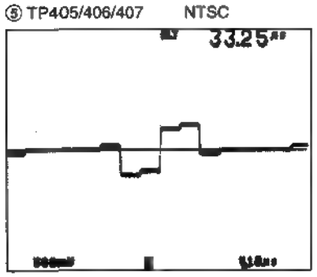

⑦ TP409/410/411 NTSC

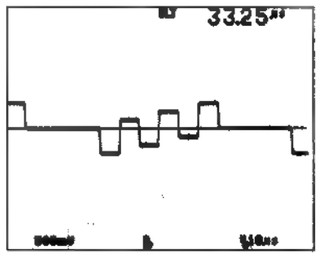

② TP603/605 NTSC

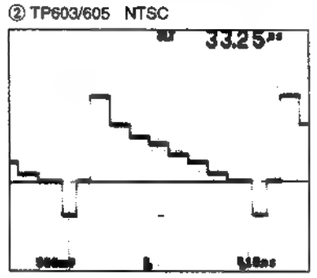

④ TP607 NTSC

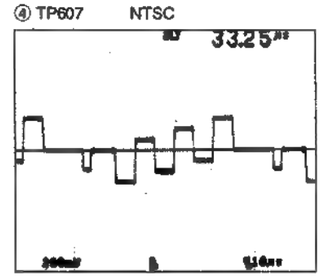

⑤ TP405/406/407 PAL

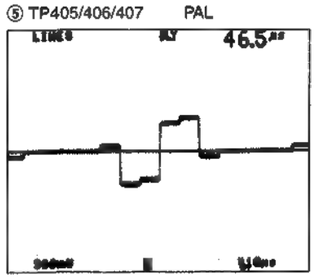

⑦ TP409/410/411 PAL

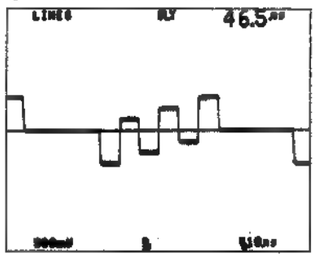

② TP603/605 PAL

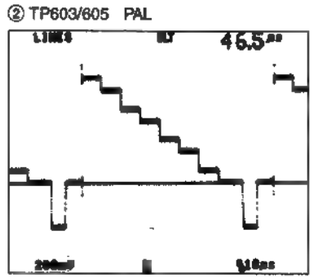

④ TP607 PAL

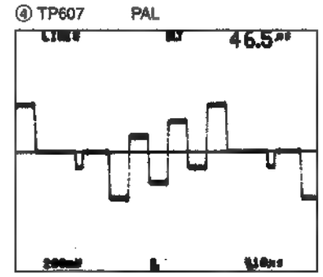

DA-95/95A (4/6)

⑤ TP608 NTSC

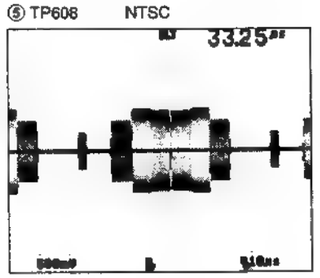

⑤ TP608 PAL

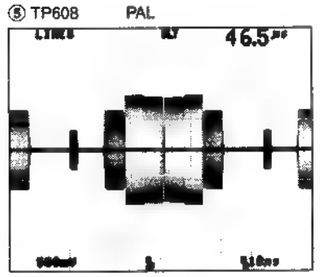

⑥ TP609 NTSC

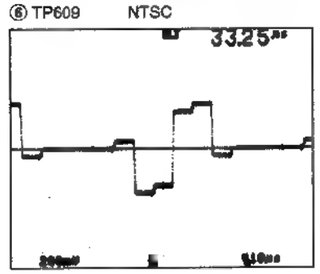

⑥ TP609 PAL

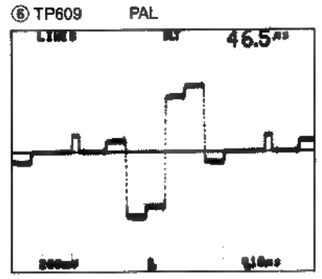

DA-95/95A (5/6)

① TP800 NTSC

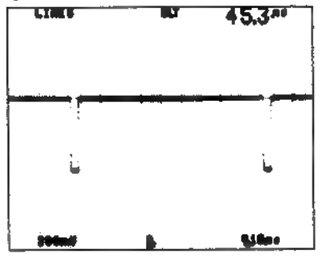

① TP800 PAL

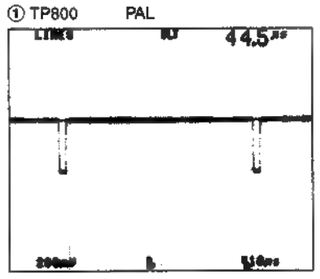

③ TP802

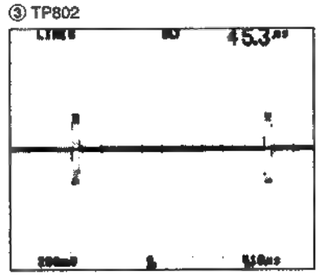

④ TP803

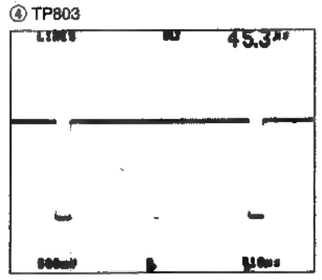

TIMING GENERATE

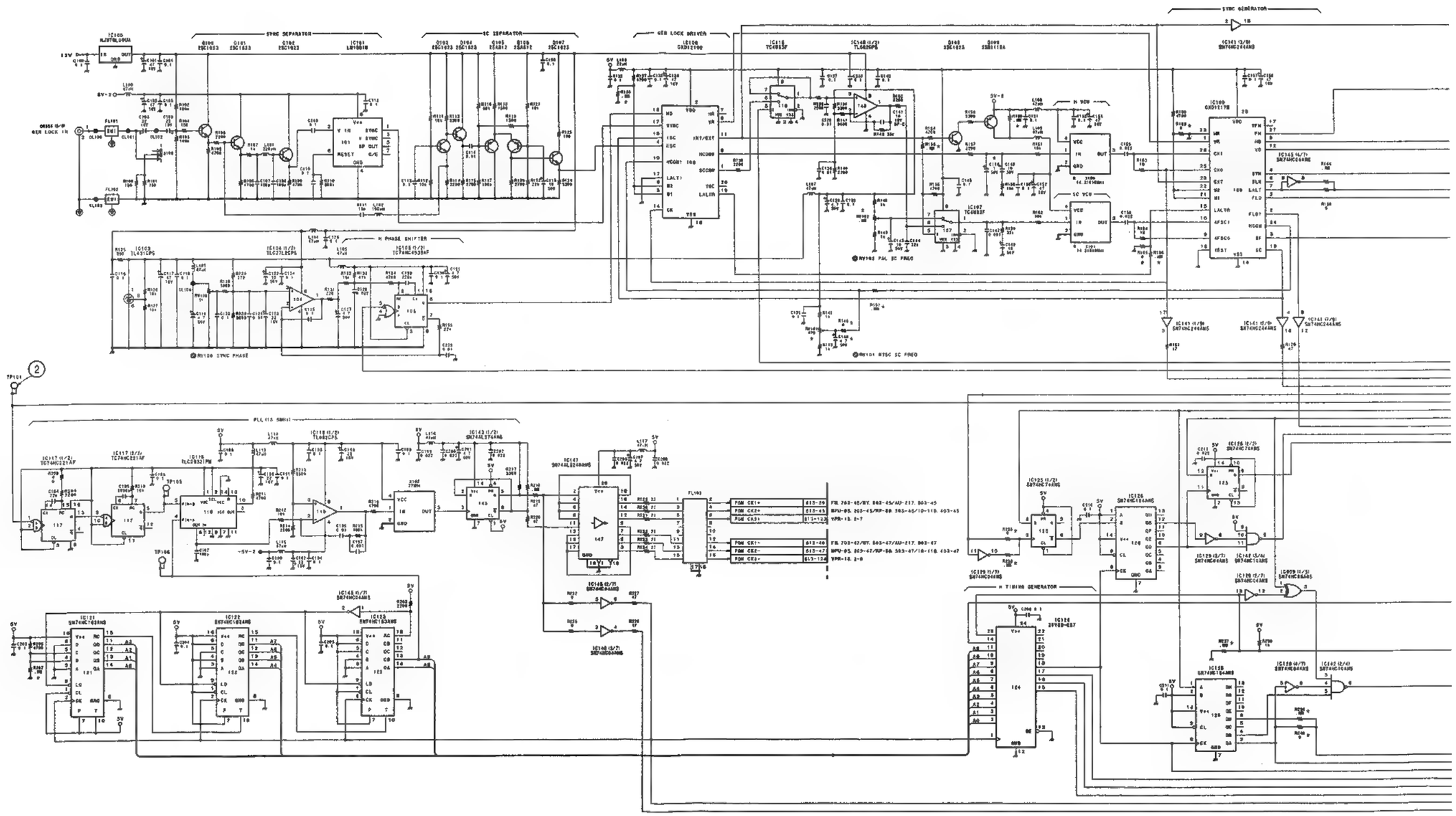

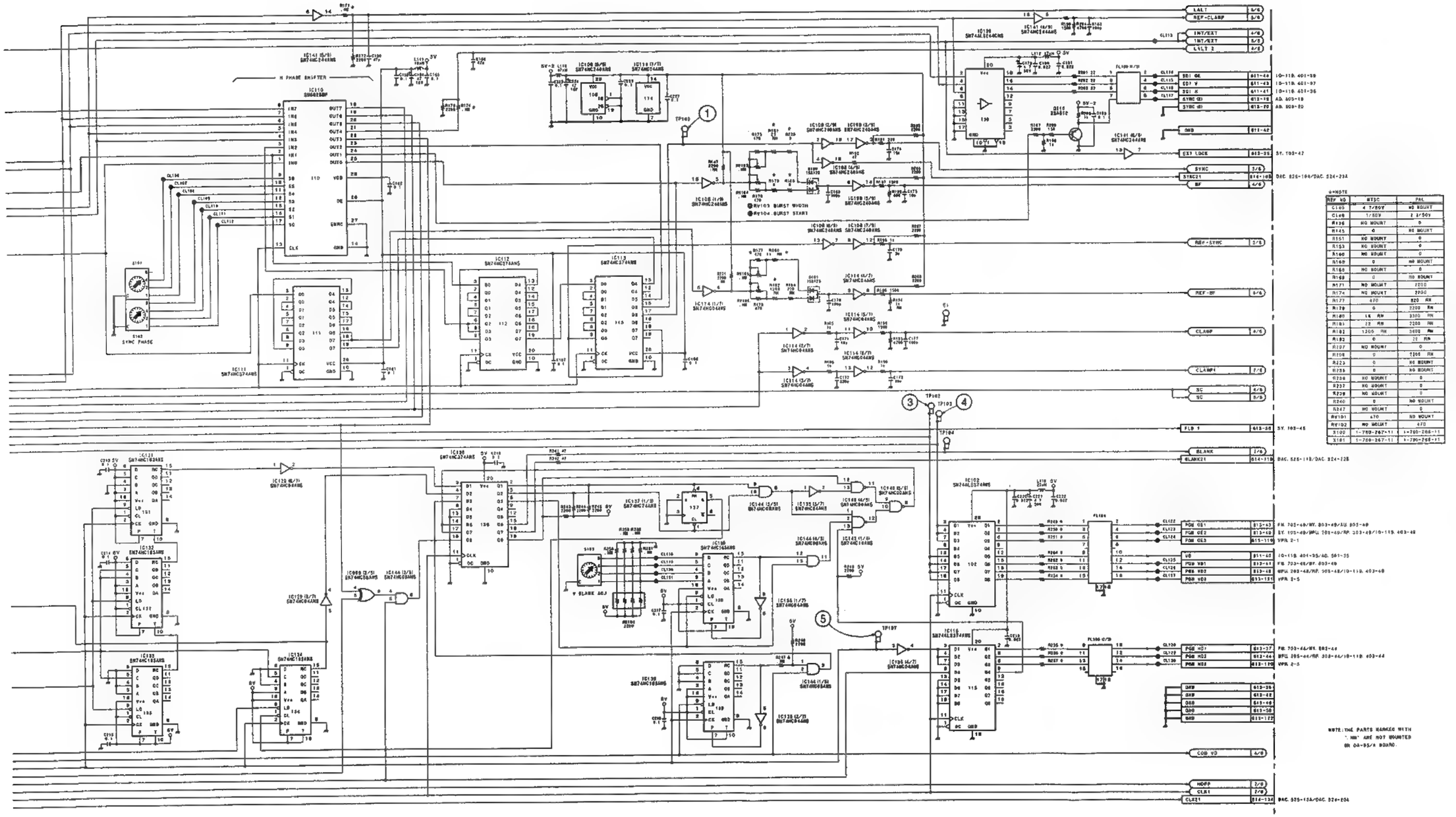

REF NO	NTSC	PAL
C145	4.7/50V	NO MOUNT
C148	1/50V	2.2/50V
R126	NO MOUNT	0
R145	0	NO MOUNT
R151	NO MOUNT	0
R153	NO MOUNT	0
R160	NO MOUNT	0
R169	0	NO MOUNT
R168	NO MOUNT	0
R169	0	NO MOUNT
R171	NO MOUNT	2200
R174	NO MOUNT	2200
R177	470	820
R178	0	2200
R180	1K
R181	22
R183	1205
R193	0	22
R197	NO MOUNT	0
R198	0	2200
R223	0	NO MOUNT
R235	0	NO MOUNT
R236	NO MOUNT	0
R237	NO MOUNT	0
R239	NO MOUNT	0
R240	0	NO MOUNT
R247	NO MOUNT	0
RV101	470	NO MOUNT
RV102	NO MOUNT	470
S100	1-760-267-11	1-760-266-11
X101	1-760-267-11	1-760-266-11

NOTE: THE PARTS MARKED WITH "*" ARE NOT MOUNTED ON DA-95/A BOARD.

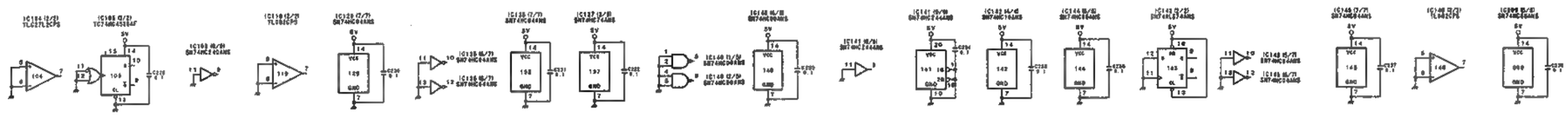

DA-95/95A (1/6)
PART NO 1-661-118-12
MODEL ES-7
B-ES7-DA95-12

2-63 2-63

ES-7

I J K L M N O P

D/A CONVERT

1

2

3

4

5

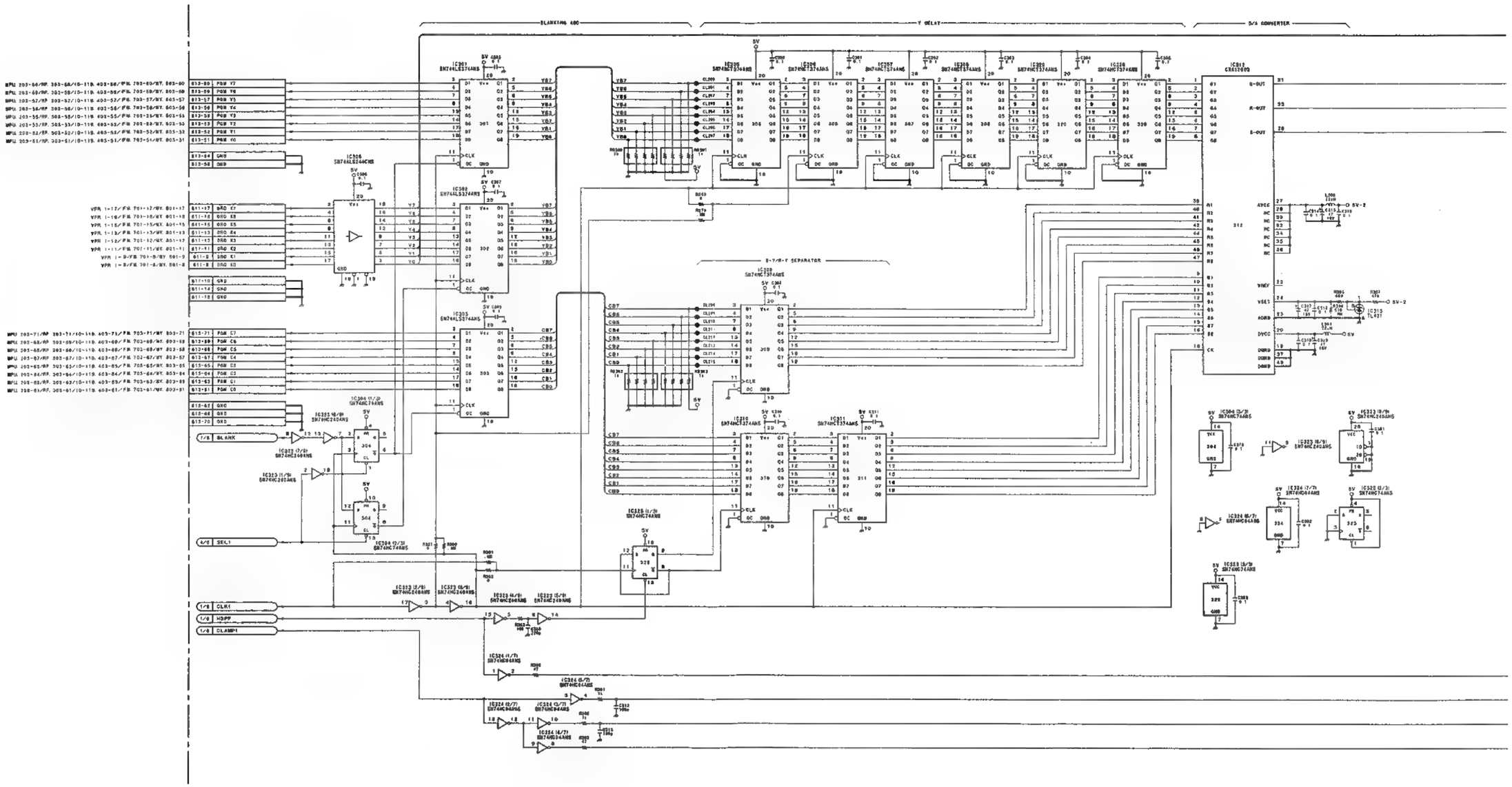

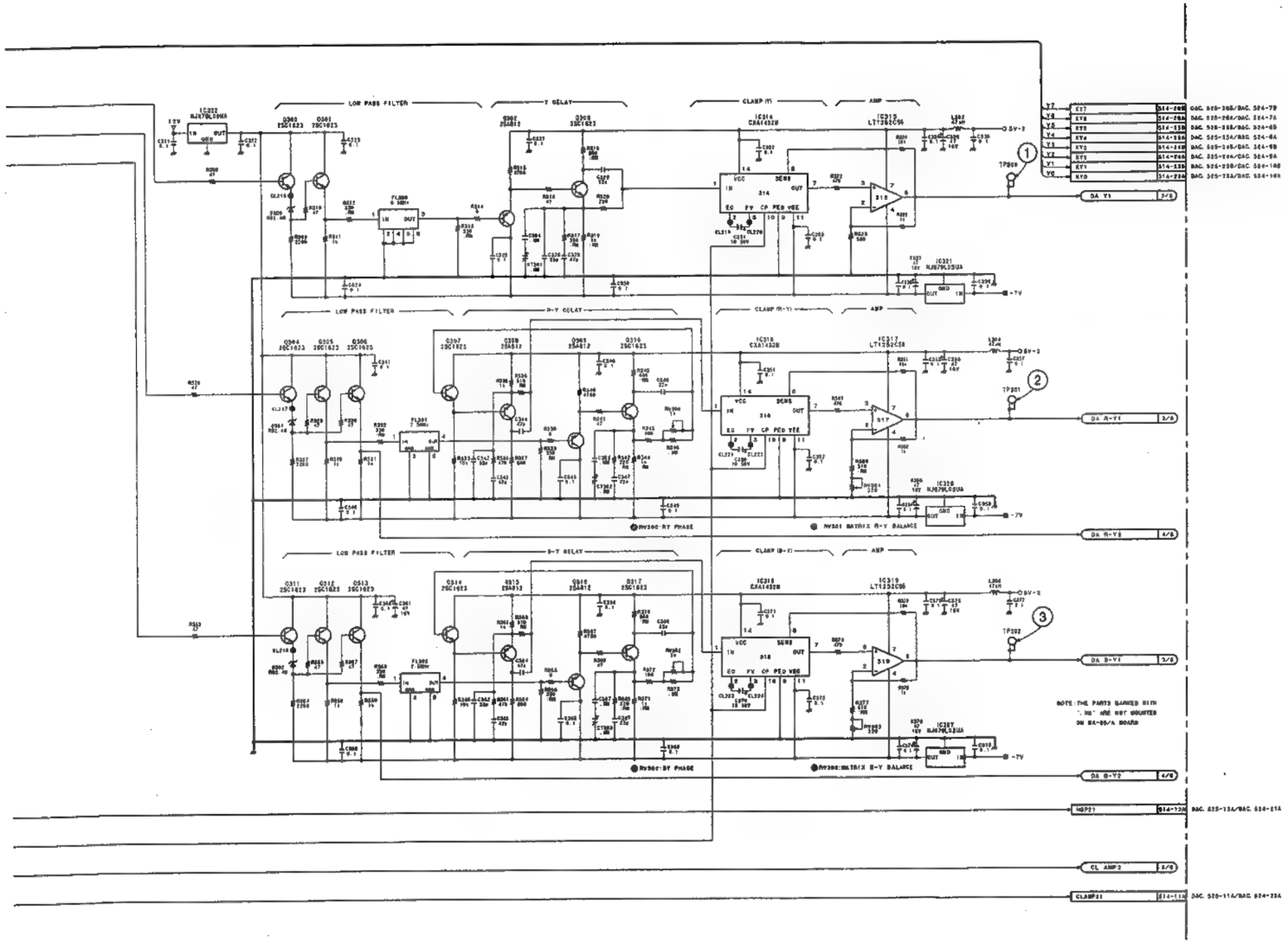

DA-95/95A (2/6)
PART NO 1-661-118-12
MODEL ES-7
B-ES7-DA95-12

RGB MATRIX & COMPONENT OUTPUT

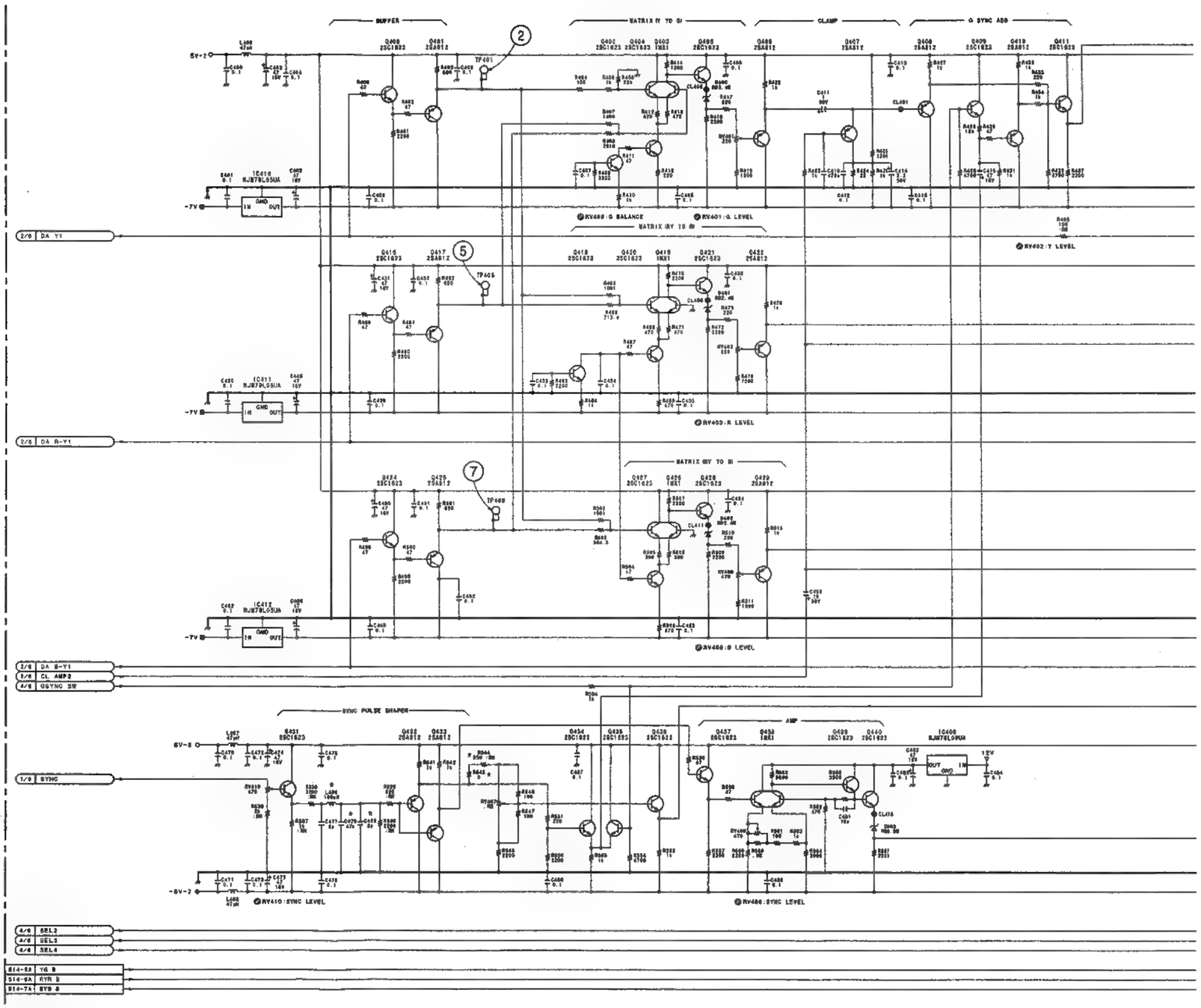

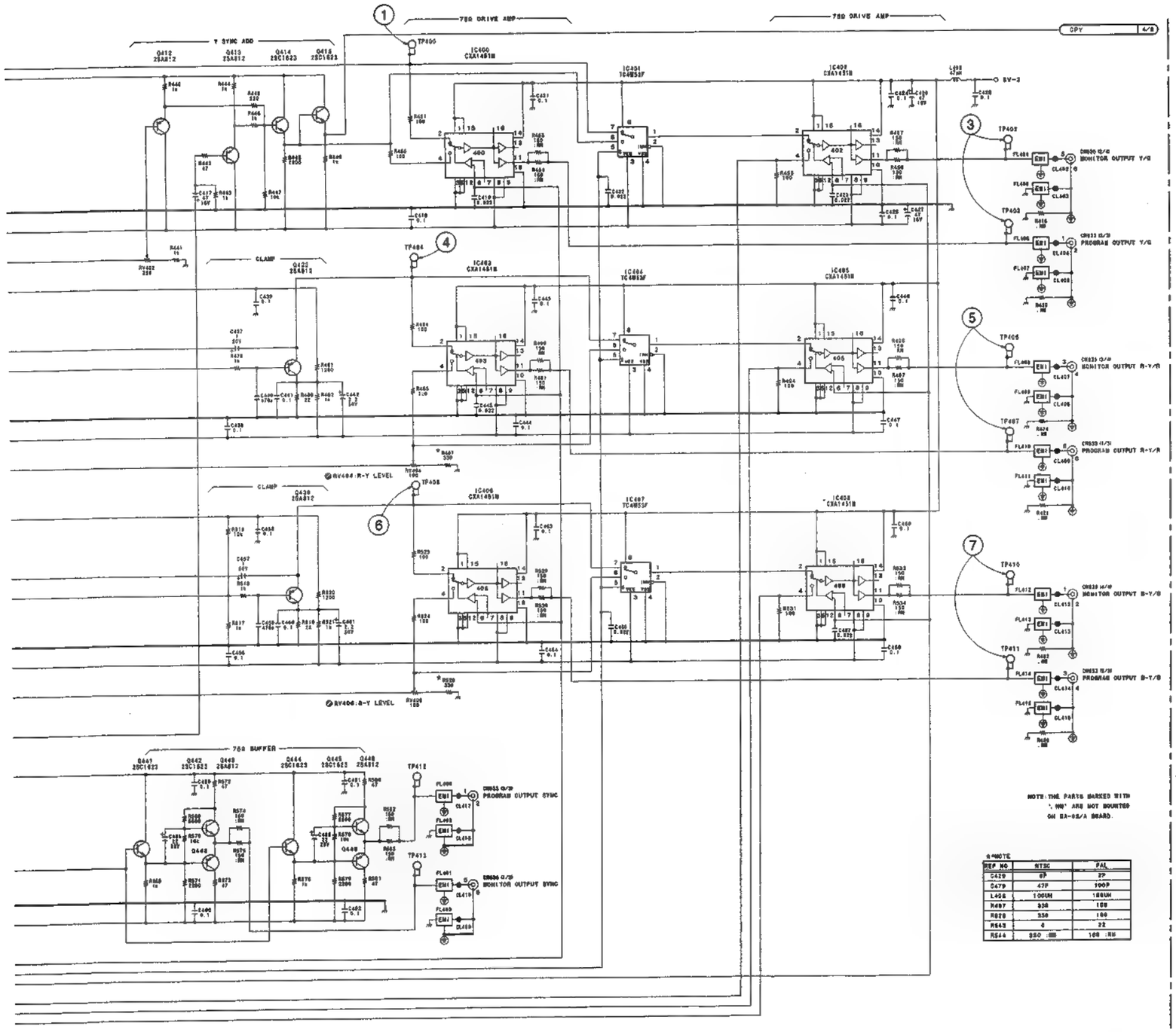

DA-95/95A (3/6)
PART NO 1-661-118-12
MODEL ES-7
B-ES7-DA95-12

COMPOSITE OUTPUT

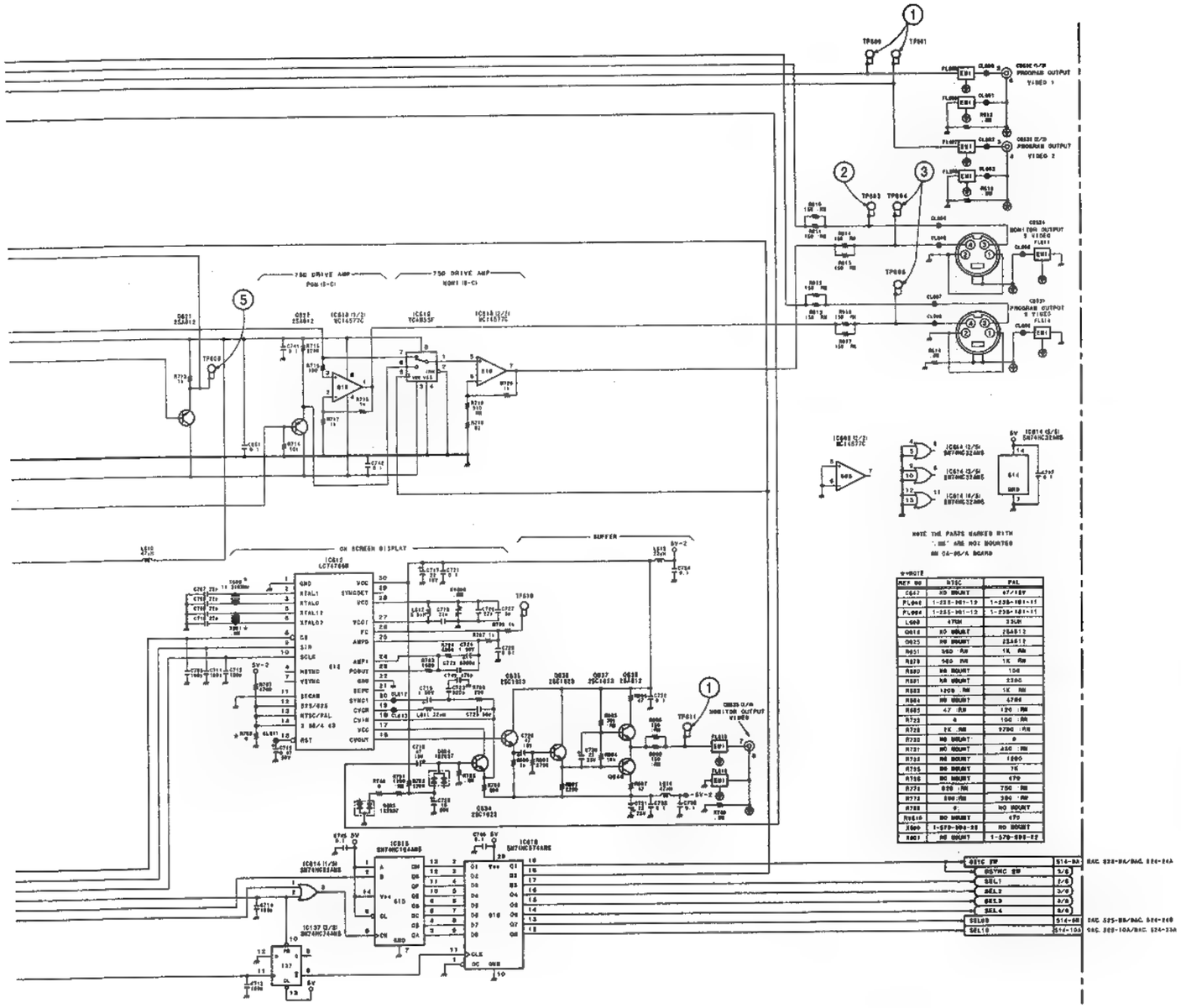
TP500
TP501
TP503
TP504
TP505
TP508
TP510
TP511
5V
5V-2
ON SCREEN DISPLAY
BUFFER
IC612 LC747668
IC615 SN74HC164ARE
IC616 SN74HC574ARE
IC617 SN74HC74ARE
IC614 SN74HC32ARE
IC614 SN74HC08ARE
IC614 SN74HC04ARE
IC614 SN74HC32ARE
IC614 SN74HC32ARE
IC614 SN74HC32ARE
IC614 SN74HC08ARE
IC614 SN74HC32ARE
IC614 SN74HC04

REF OUTPUT

1

2

3

4

5

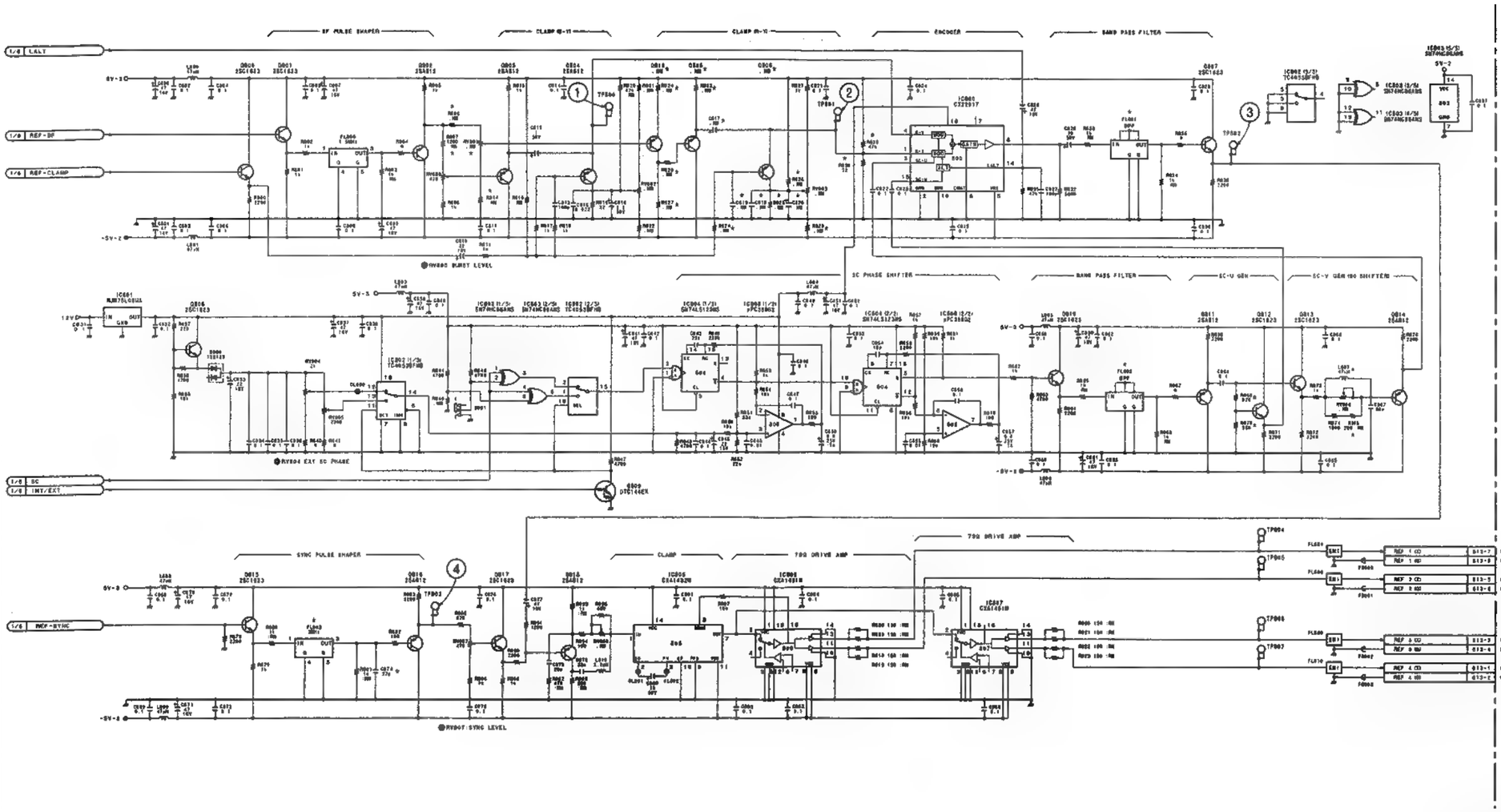

NOTE THE PARTS MARKED WITH "NM" ARE NOT MOUNTED ON DA-95/A BOARD

REF NO	NTSC	PAL
C817	NO MOUNT	1/50V
C818	NO MOUNT	180P
C819	NO MOUNT	0 027
C820	NO MOUNT	2 2/50V
C874	27P	20P
FL801	1-235-161-12	1-235-161-11
FL807	1-235-161-12	1-235-161-11
FL803	1-235-789-11	1-235-884-11
L807	47UH	35UH
Q805	NO MOUNT	2SA812
Q806	NO MOUNT	2SA812
Q818	NO MOUNT	2SA812
R805	NO MOUNT	120 RN
R807	1200 RN	1K RN
R814	NO MOUNT	1K
R823	NO MOUNT	1K
R824	NO MOUNT	1K
R825	NO MOUNT	2K
R826	NO MOUNT	100K RN
R828	NO MOUNT	1K
R819	47K	NO MOUNT
R850	22	NO MOUNT
R869	800	680 RN
R870	360	360 RN
R878	200 RN	120 RN
R924	NO MOUNT	1K
R925	NO MOUNT	0
R927	NO MOUNT	470
RV801	NO MOUNT	470

DA-95/95A (5/6)
PART NO 1-661-118-12
MODEL ES-7
B-ES7-DA95-12

POWER REGULATE

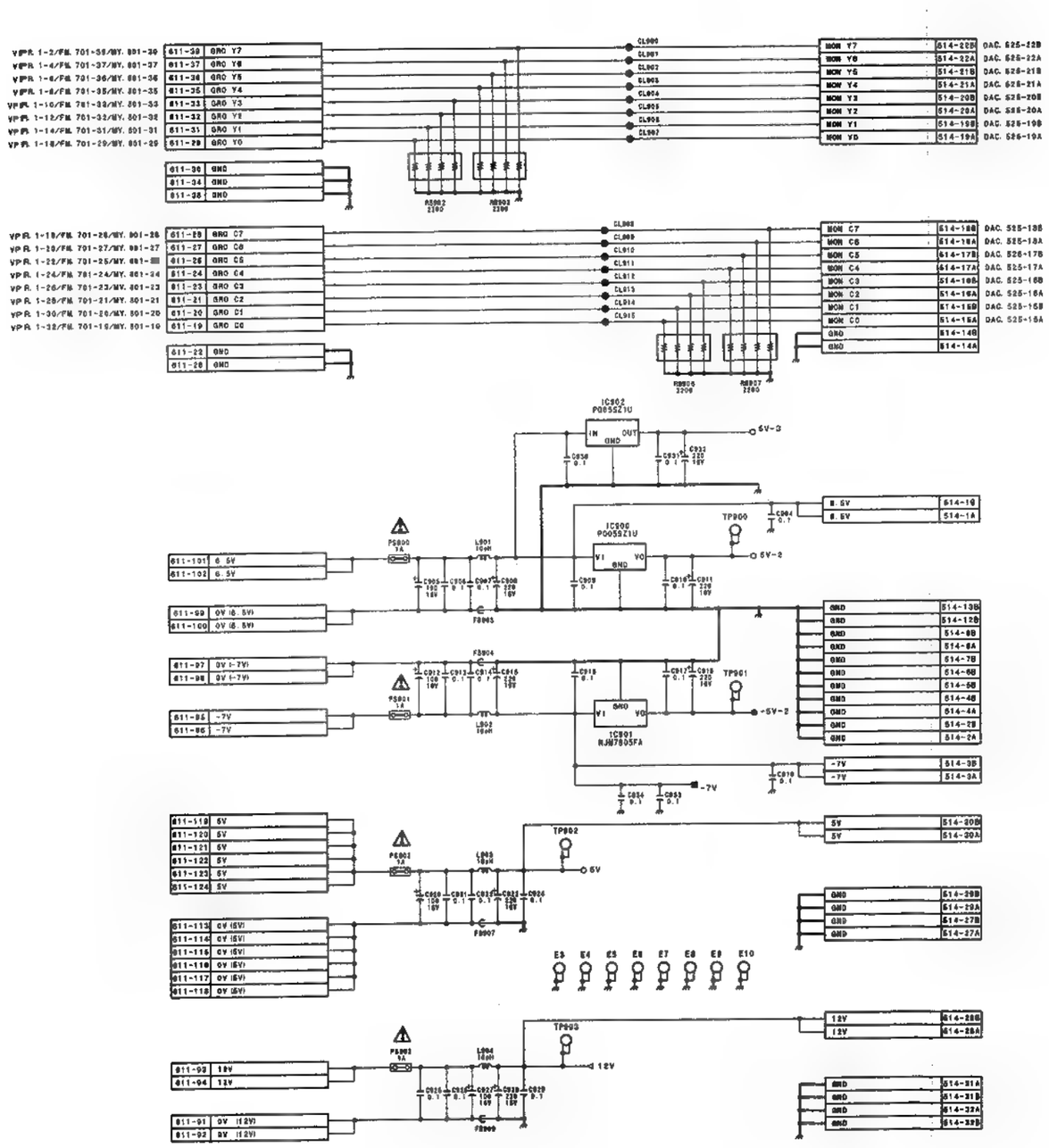

CN611

611-48	GND
611-50	GND
611-54	GND
611-58	GND
611-62	GND
611-66	GND
611-70	GND
611-74	GND
611-78	GND

611-4	N.C.
611-7	N.C.
611-45	N.C.
611-47	N.C.
611-48	N.C.
611-49	N.C.
611-51	N.C.
611-52	N.C.
611-53	N.C.
611-55	N.C.
611-56	N.C.
611-57	N.C.
611-59	N.C.
611-60	N.C.
611-61	N.C.
611-63	N.C.
611-64	N.C.
611-65	N.C.
611-67	N.C.
611-68	N.C.
611-69	N.C.
611-71	N.C.
611-72	N.C.
611-73	N.C.
611-75	N.C.
611-76	N.C.
611-77	N.C.
611-83	N.C.
611-84	N.C.
611-85	N.C.
611-86	N.C.
611-87	N.C.
611-88	N.C.
611-89	N.C.
611-90	N.C.
611-103	N.C.
611-104	N.C.
611-105	N.C.
611-106	N.C.
611-107	N.C.
611-108	N.C.
611-109	N.C.
611-110	N.C.
611-111	N.C.
611-112	N.C.

CN613

613-10	GND
613-14	GND
613-18	GND
613-22	GND
613-74	GND
613-78	GND
613-82	GND
613-86	GND
613-90	GND
613-94	GND
613-98	GND
613-102	GND
613-106	GND
613-110	GND
613-114	GND
613-118	GND

613-9	N.C.
613-11	N.C.
613-12	N.C.
613-13	N.C.
613-15	N.C.
613-16	N.C.
613-17	N.C.
613-21	N.C.
613-23	N.C.
613-24	N.C.
613-25	N.C.
613-29	N.C.
613-33	N.C.
613-72	N.C.
613-73	N.C.
613-75	N.C.
613-76	N.C.
613-77	N.C.
613-79	N.C.
613-80	N.C.
613-81	N.C.
613-83	N.C.
613-84	N.C.
613-85	N.C.
613-87	N.C.
613-88	N.C.
613-89	N.C.
613-91	N.C.
613-92	N.C.
613-93	N.C.
613-95	N.C.
613-96	N.C.
613-97	N.C.
613-98	N.C.
613-111	N.C.
613-112	N.C.
613-113	N.C.
613-115	N.C.
613-116	N.C.
613-117	N.C.

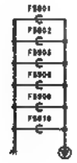

DA-95/95A (6/6)
PART NO 1-661-118-12
MODEL ES-7
B-ES7-DA95-12

SYSTEM CONTROL

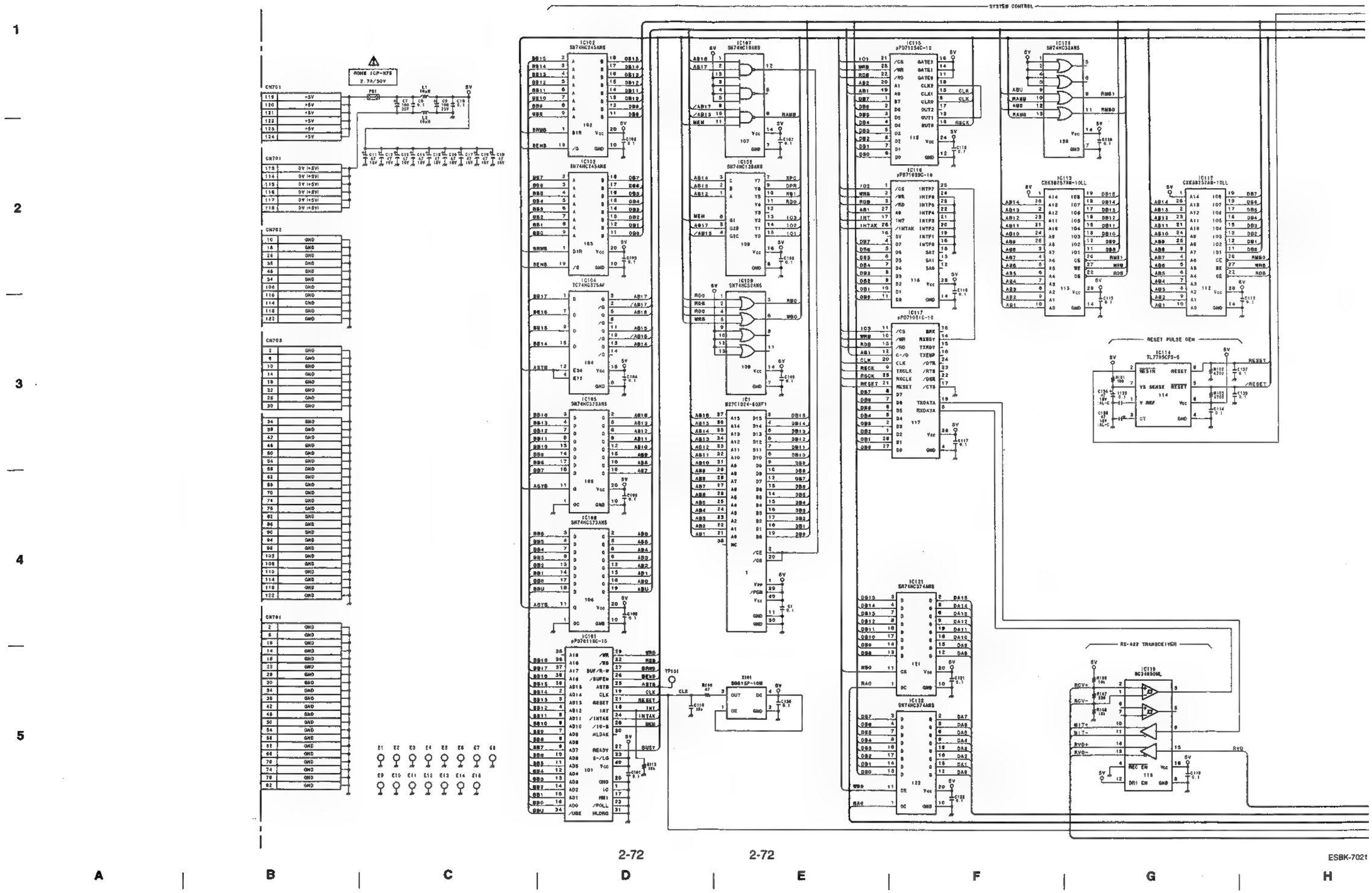

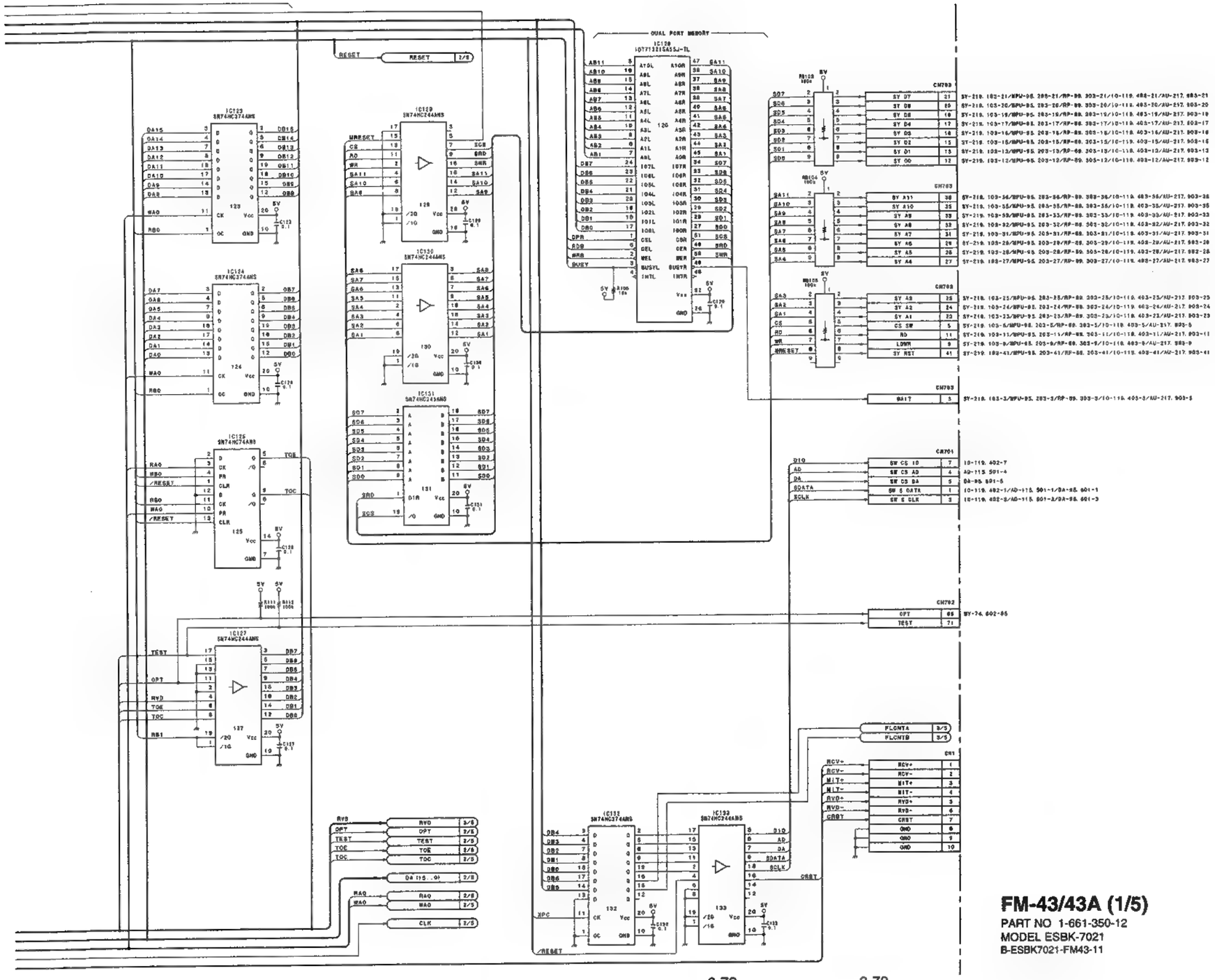

FM-43/43A (1/5)
PART NO 1-661-350-12
MODEL ESBK-7021
B-ESBK7021-FM43-11

EFFECTS CONTROL

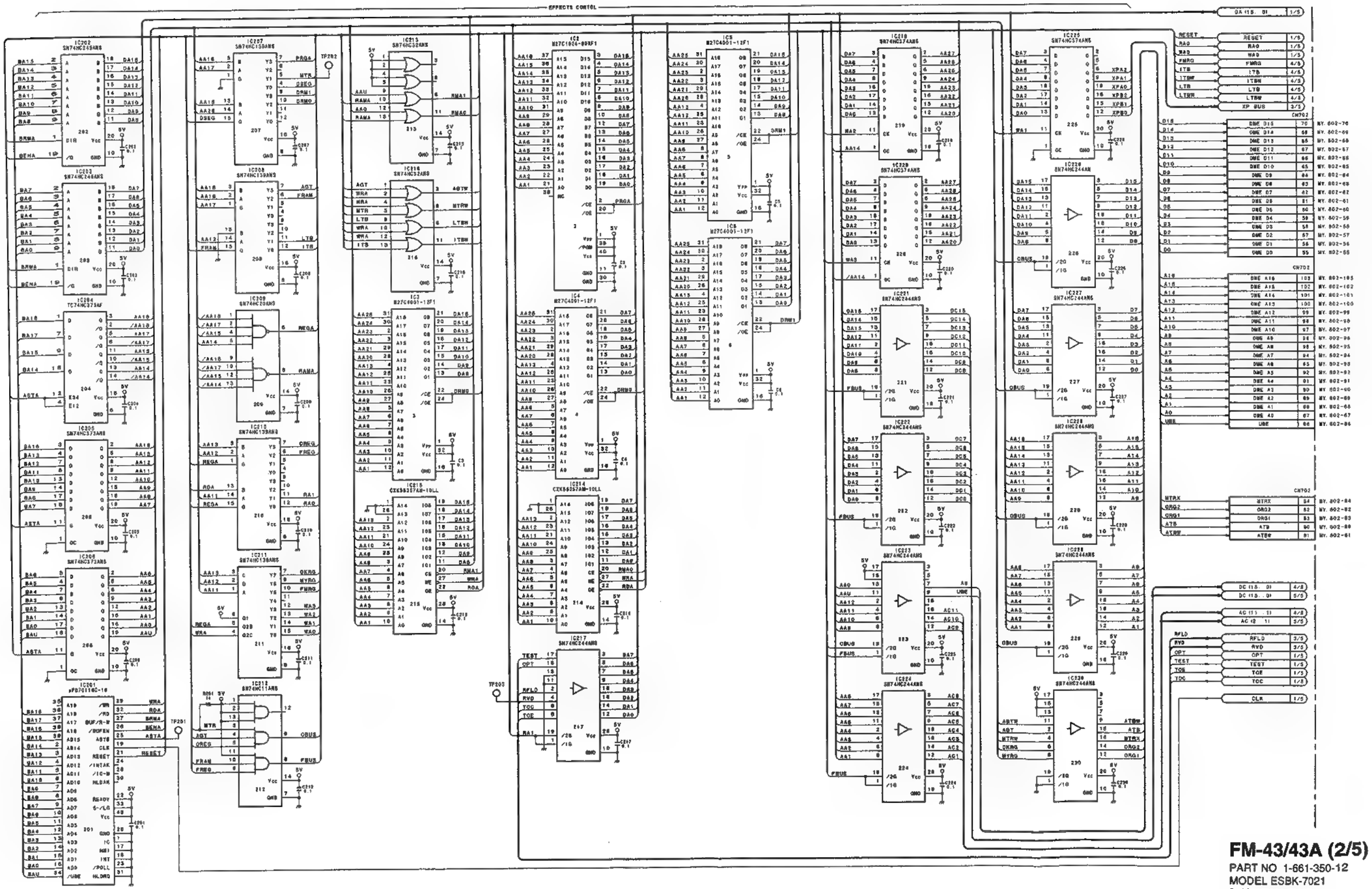

FM-43/43A (2/5)
PART NO 1-661-350-12
MODEL ESBK-7021
B-ESBK7021-FM43-11

X-POINT

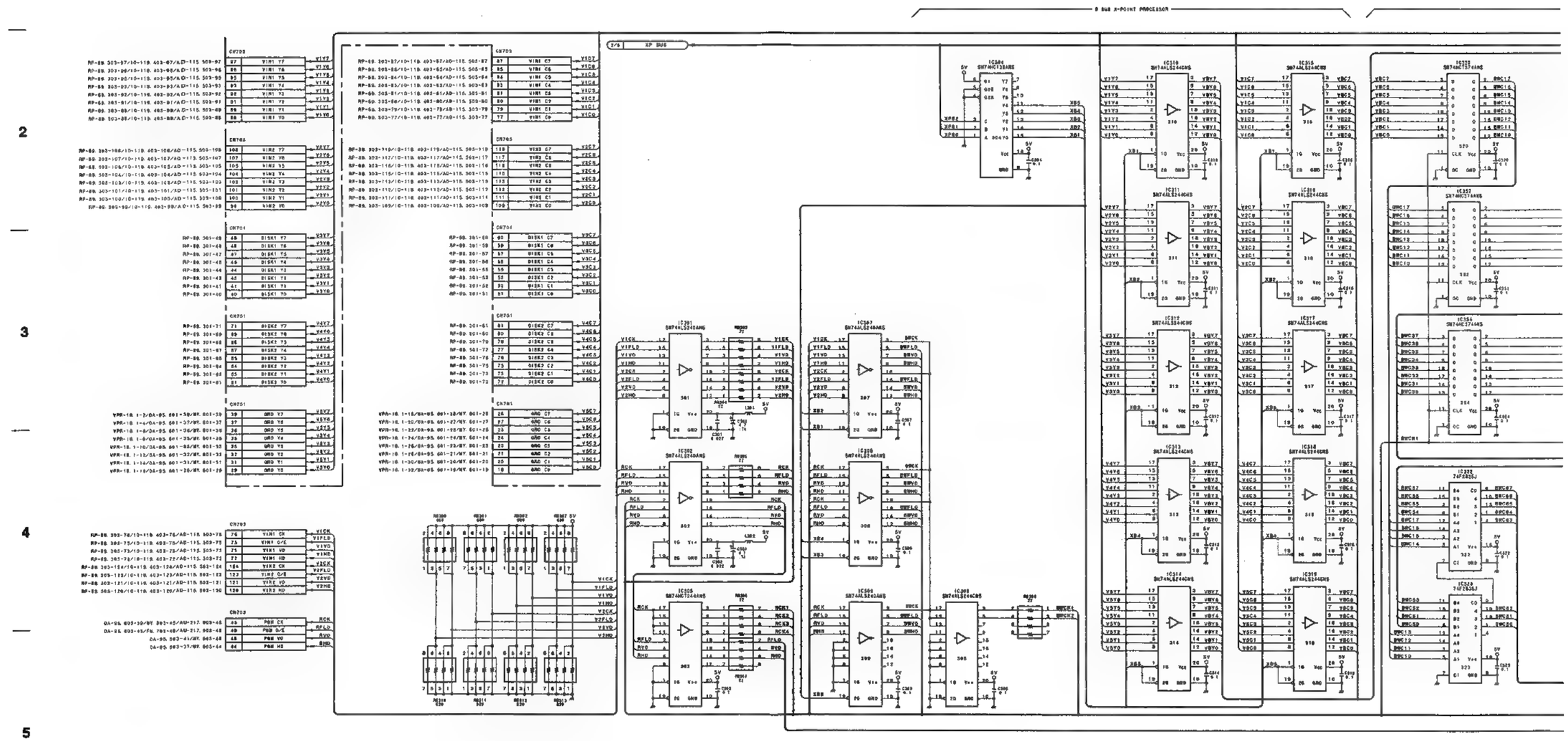
8 BUS X-POINT PROCESSOR
XP BUS
CN703
CN705
CN704
CN701
CN706
CN707
CN708
IC306 SN74HC138ABE
IC310 SN74ALS240CNS
IC311 SN74ALS240CNS
IC312 SN74ALS240CNS
IC313 SN74ALS240CNS
IC314 SN74ALS240CNS
IC315 SN74ALS240CNS
IC316 SN74ALS240CNS
IC317 SN74ALS240CNS
IC318 SN74ALS240CNS
IC319 SN74ALS240CNS
IC320 SN74HC574NS
IC321 SN74HC574NS
IC322 74F533SJ
IC323 74F533SJ
IC381 SN74ALS240ANS
IC382 SN74ALS240ANS
IC383 SN74ALS240ANS
IC384 SN74ALS240ANS
IC385 SN74HC7244NS
IC386 SN74ALS240ANS
IC387 SN74ALS240ANS
IC388 SN74ALS240ANS
IC389 SN74ALS240ANS
IC390 SN74ALS240ANS
IC391 SN74ALS240ANS
IC392 SN74ALS240ANS
IC393 SN74ALS240ANS
IC394 SN74ALS240ANS
IC395 SN74ALS240ANS
IC396 SN74ALS240ANS
IC397 SN74ALS240ANS
IC398 SN74ALS240ANS
IC399 SN74ALS240ANS
IC400 SN74ALS240ANS
IC401 SN74ALS240ANS
IC402 SN74ALS240ANS
IC403 SN74ALS240ANS
IC404 SN74ALS240ANS
IC405 SN74ALS240ANS

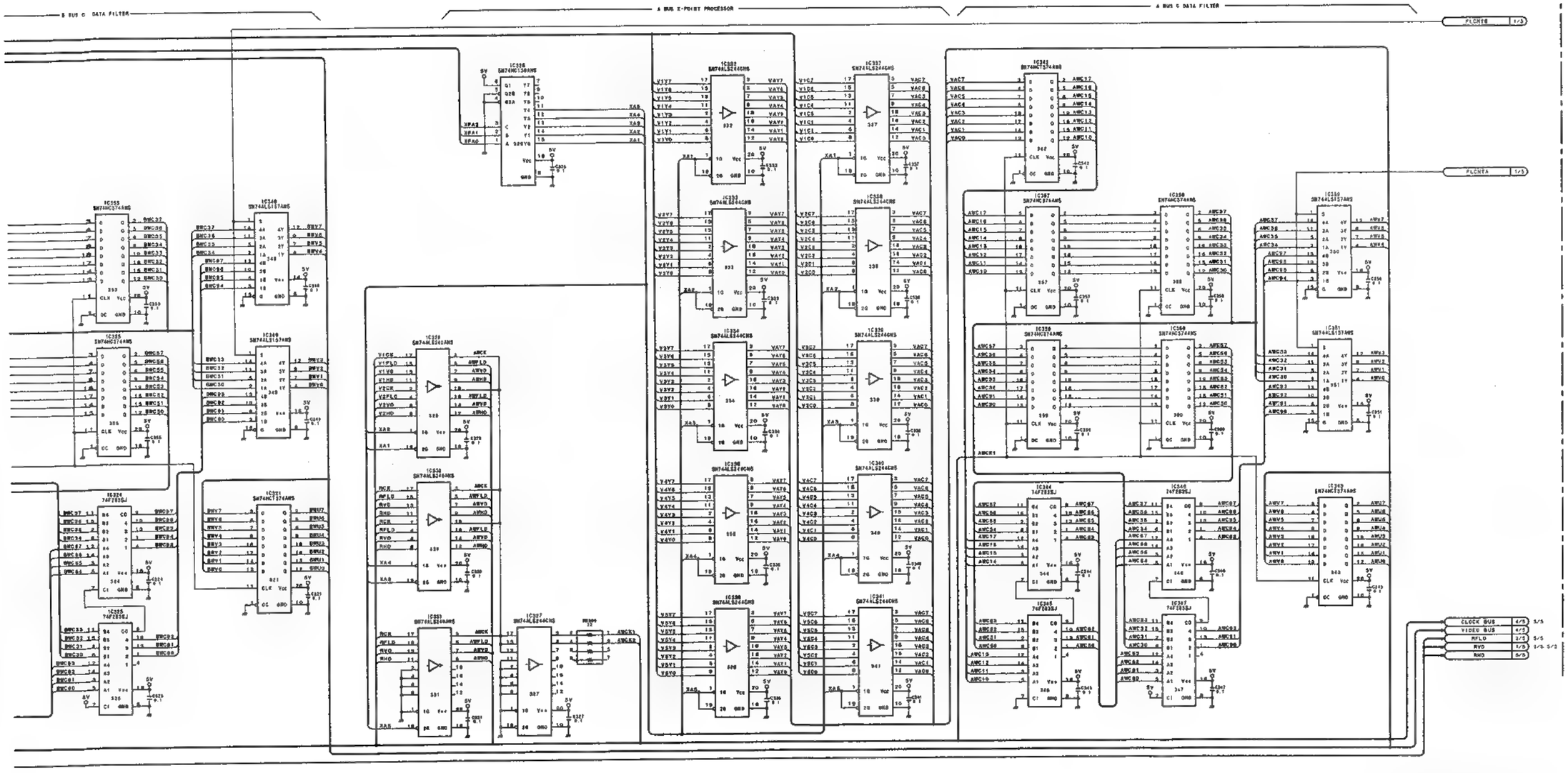

FM-43/43A (3/5)
PART NO 1-661-350-12
MODEL ESBK-7021
B-ESBK7021-FM43-11

FRAME SYNCHRONIZER

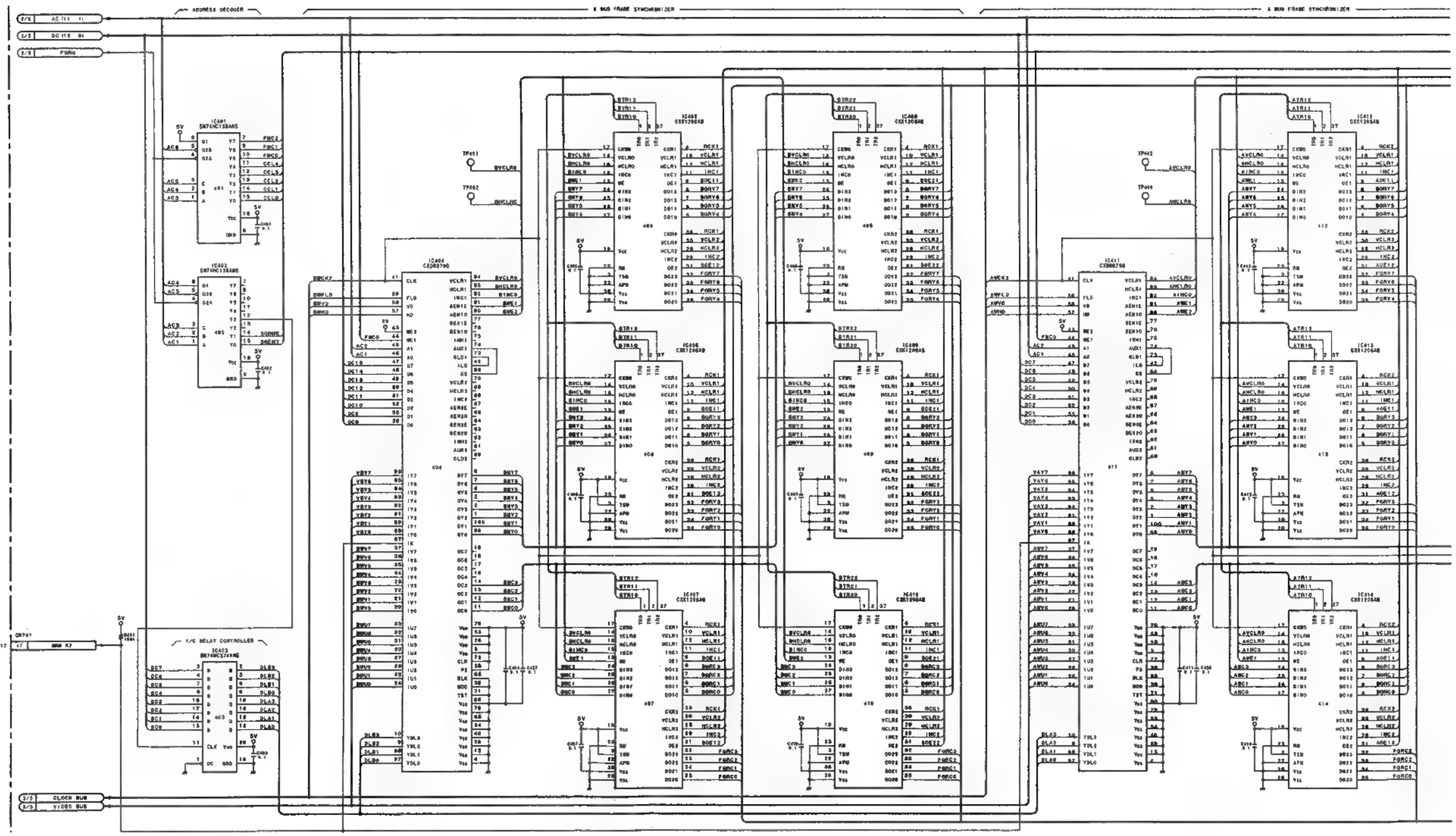

ESBK-7021

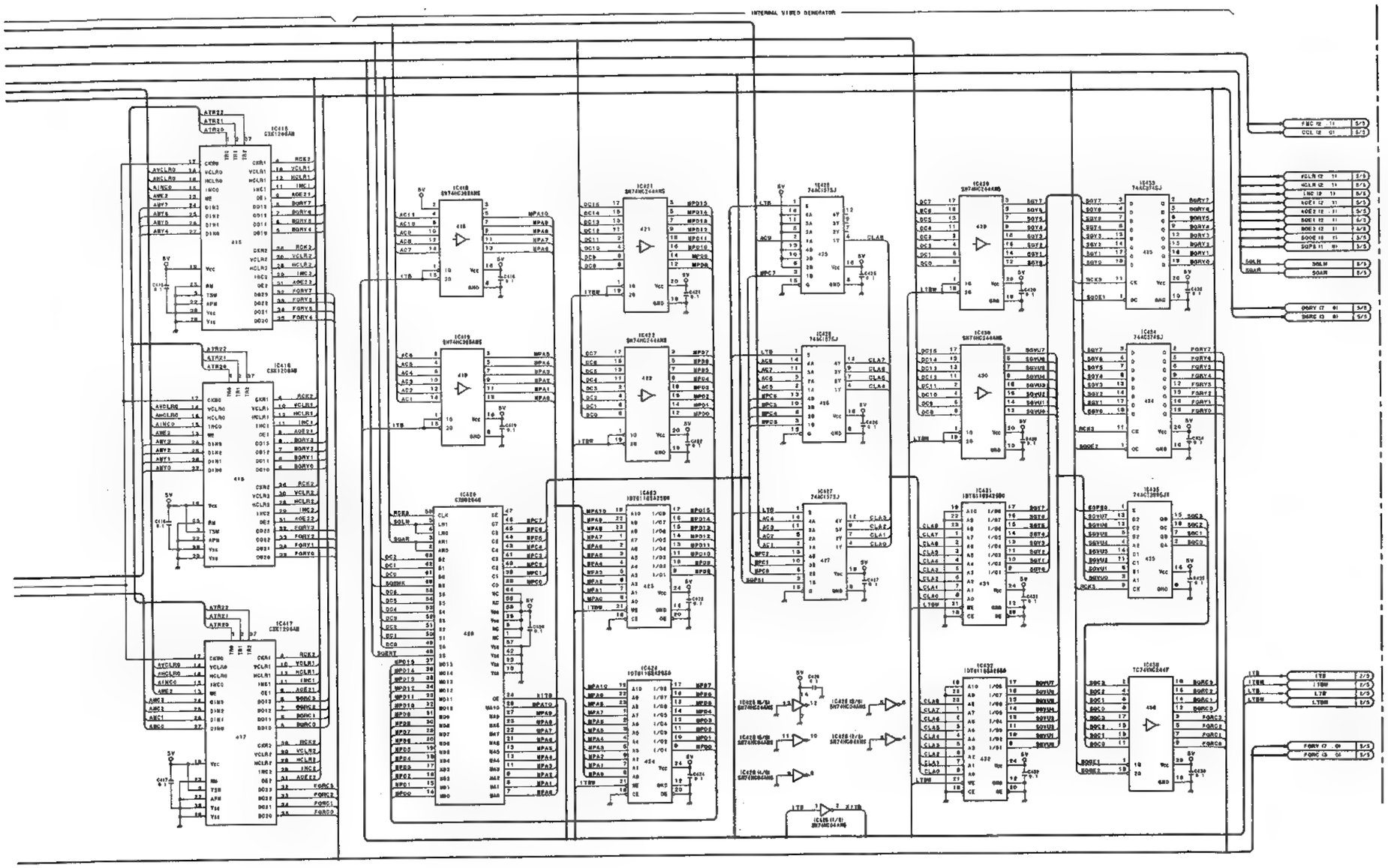

FM-43/43A (4/5)
PART NO 1-661-350-12
MODEL ESBK-7021
B-ESBK7021-FM43-11

COLOR CORRECTOR & CHROMA KEY

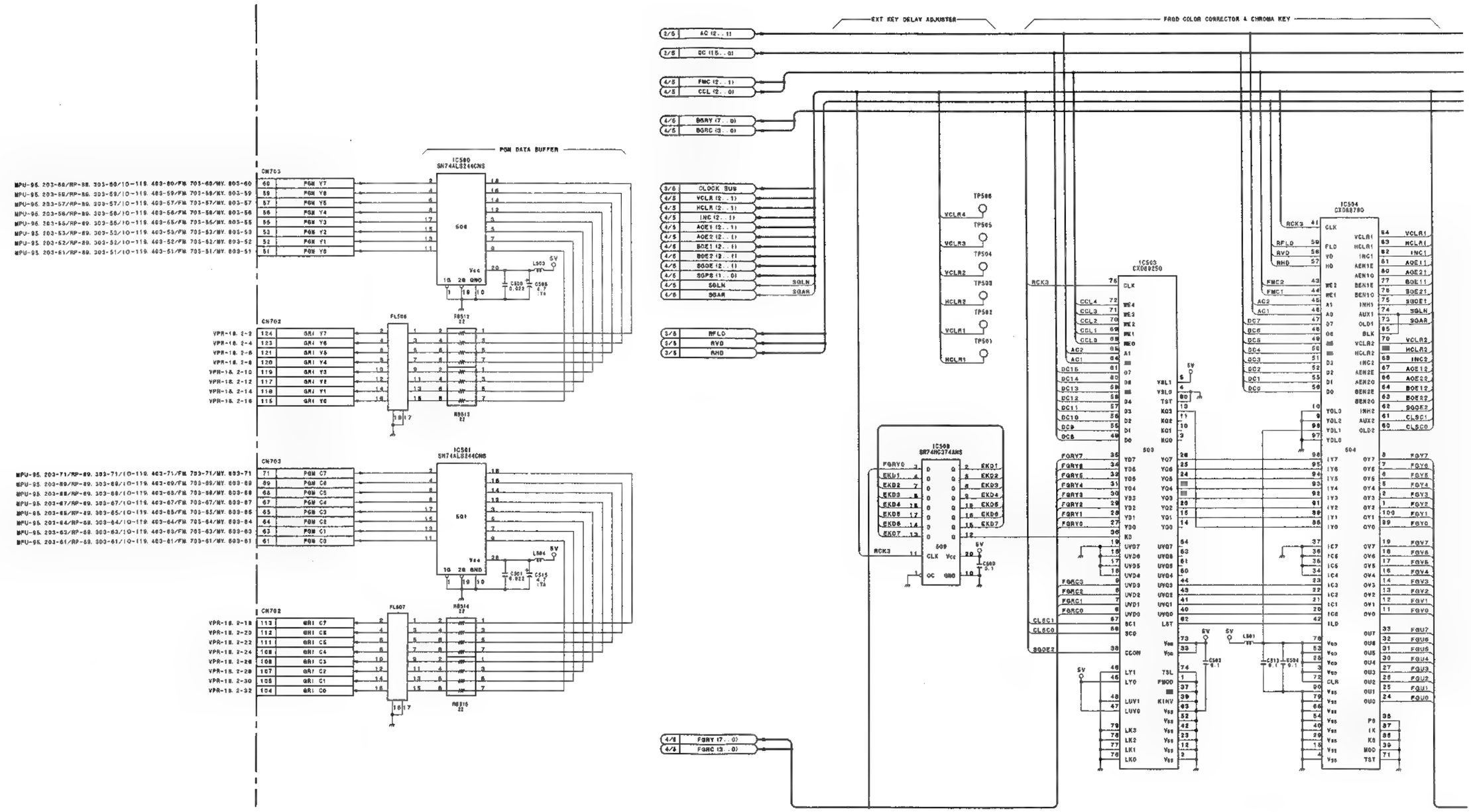

ESBK-7021

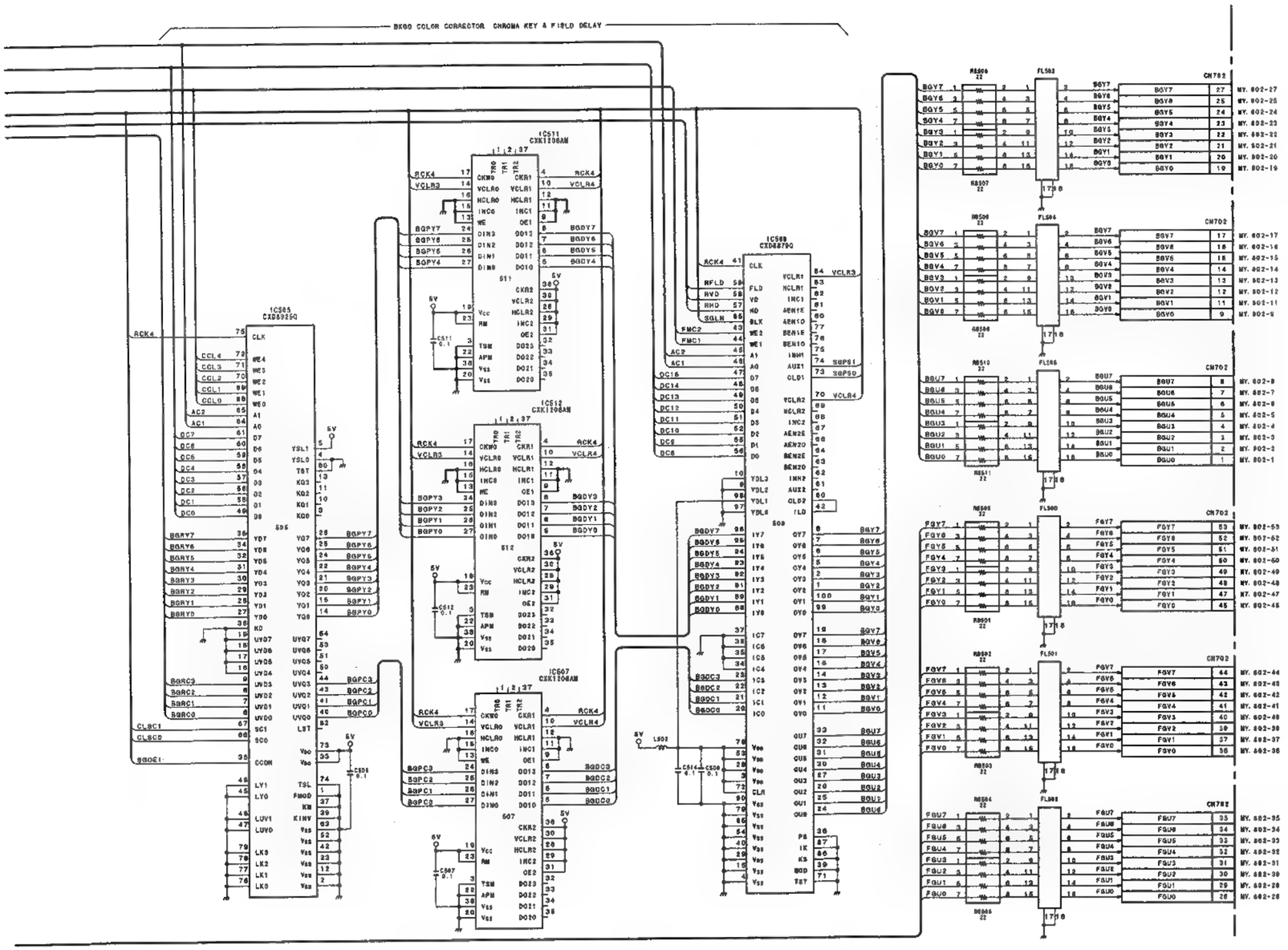

FM-43/43A (5/5)
PART NO 1-661-350-12
MODEL ESBK-7021
B-ESBK7021-FM43-11

ADDRESS GENERATOR

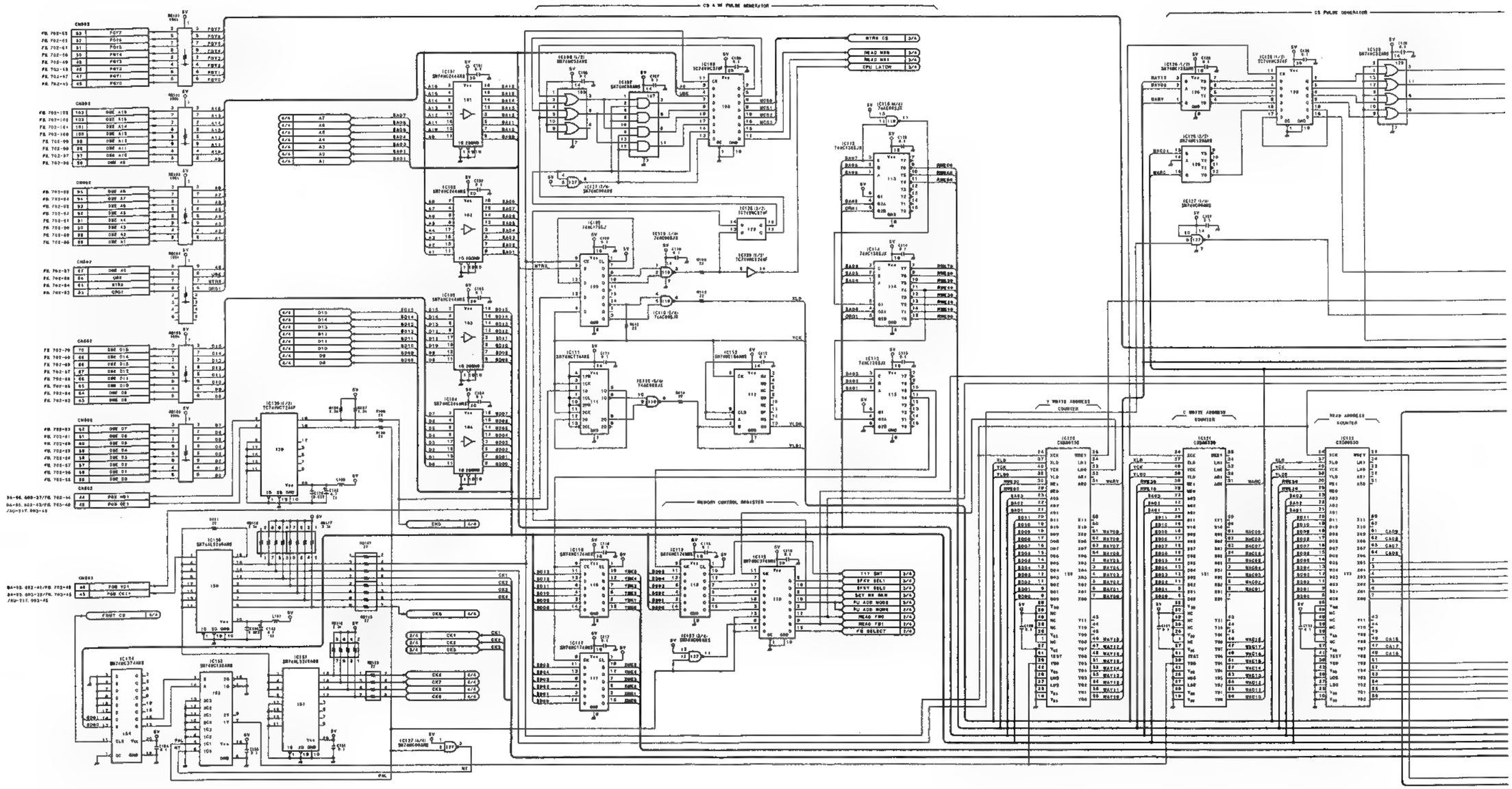

ESBK-7021

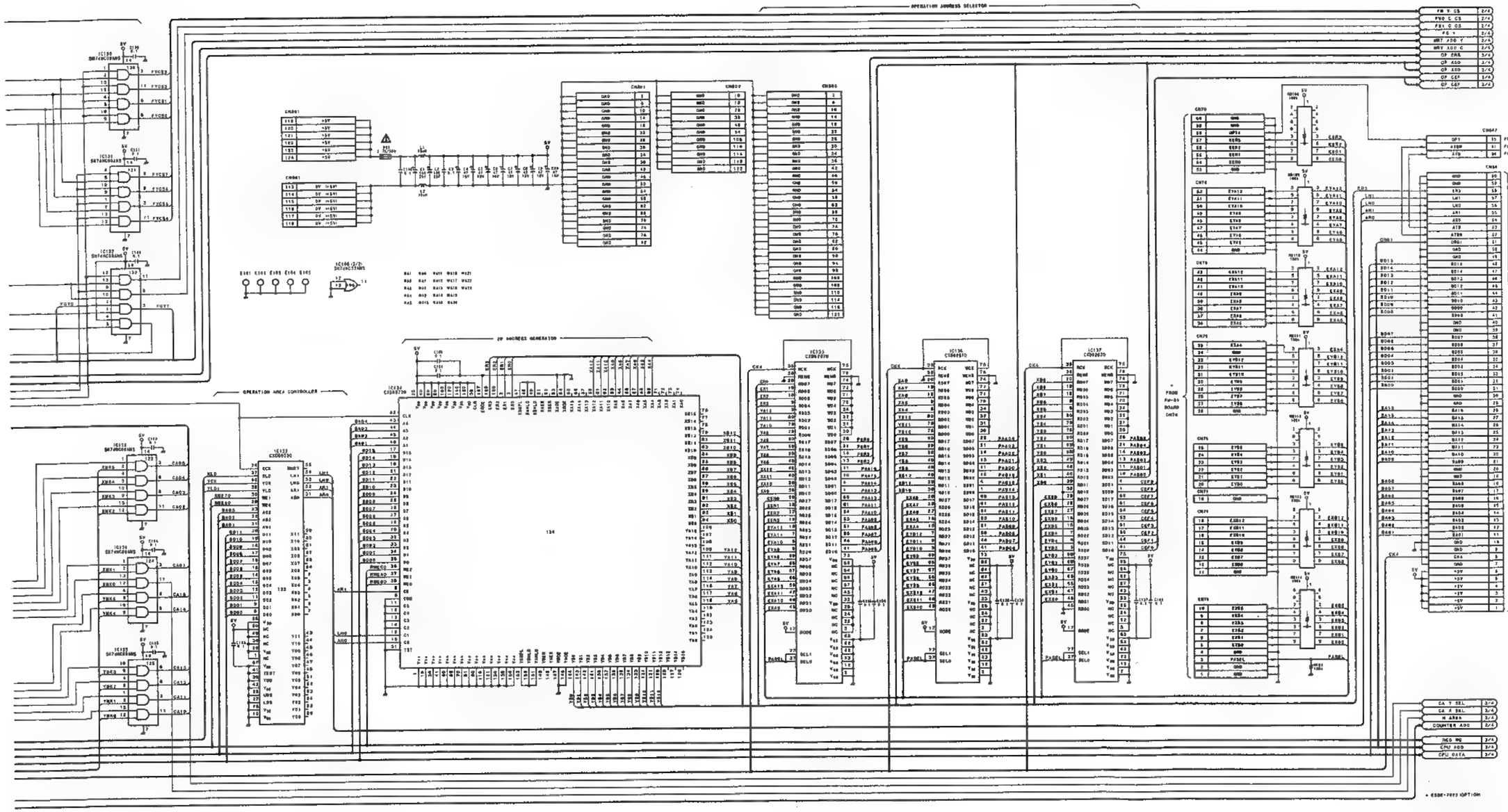

MY-74 (1/4)
PART NO 1-661-351-12
MODEL ESBK-7021
B-ESBK7021-MY74-11

FRAME MEMORY

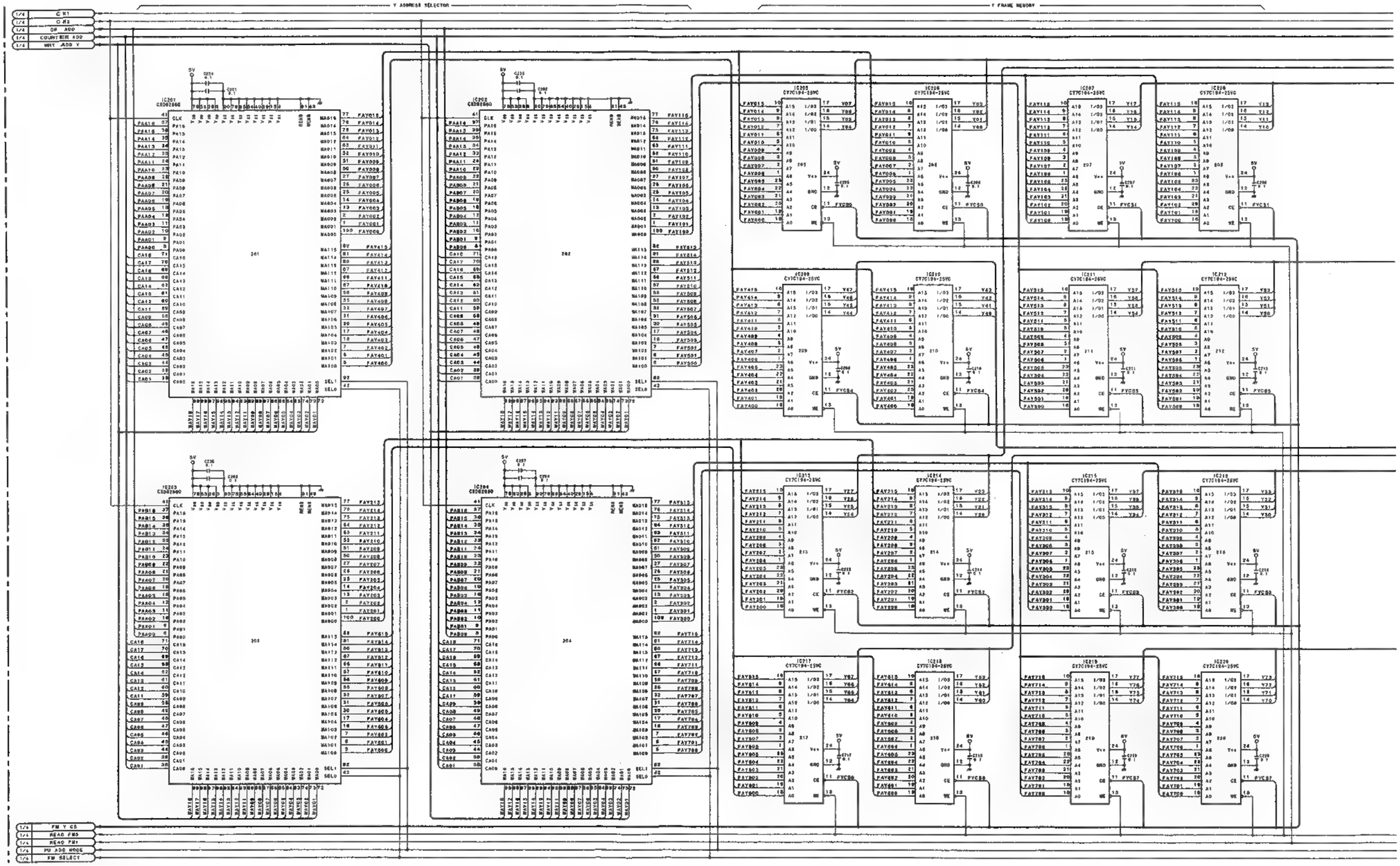

ESBK-7021

MY-74 (2/4) **MY-74 (2/4)**

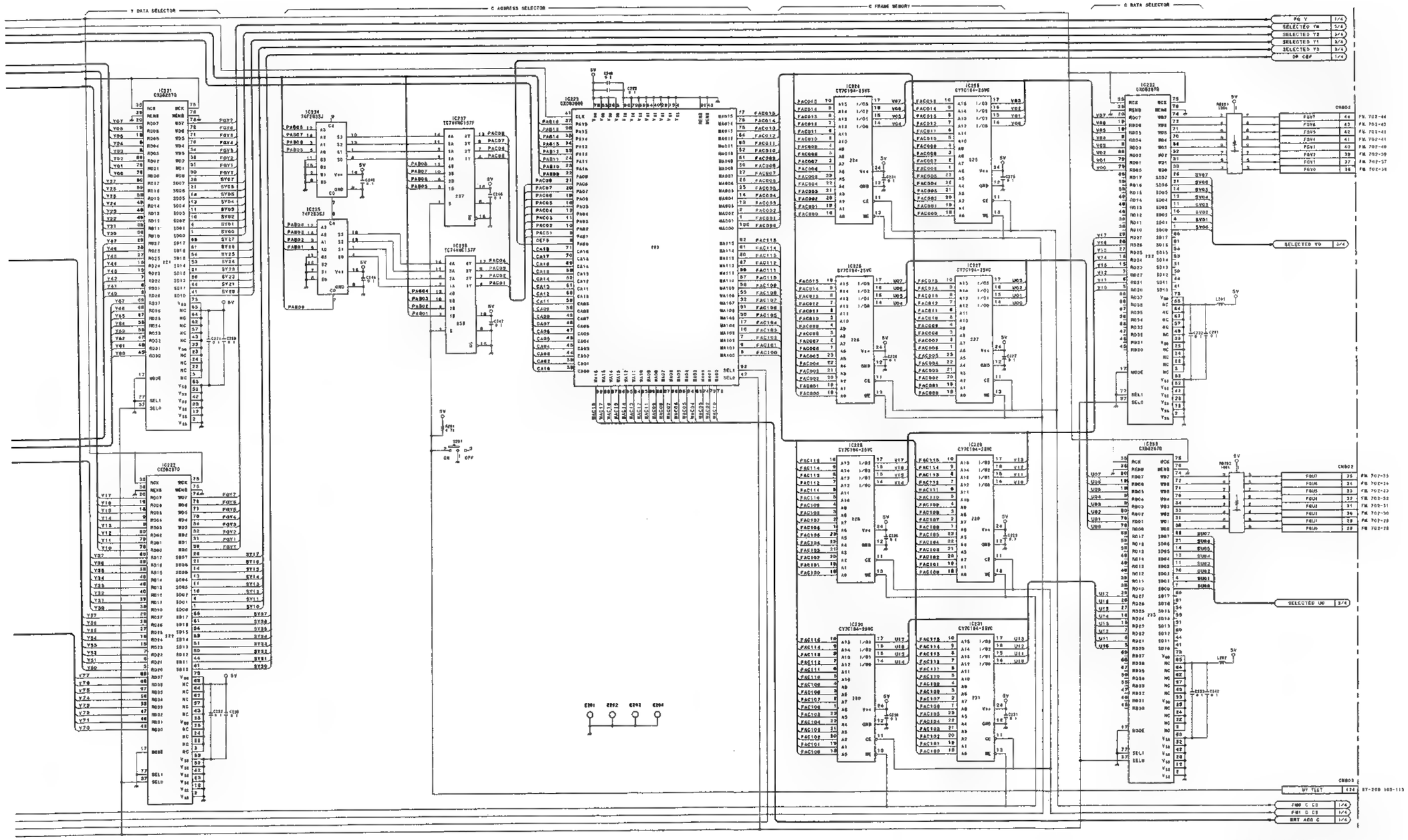

MY-74 (2/4)
PART NO 1-661-351-12
MODEL ESBK-7021
B-ESBK7021-MY74-11

INTERPOLATOR

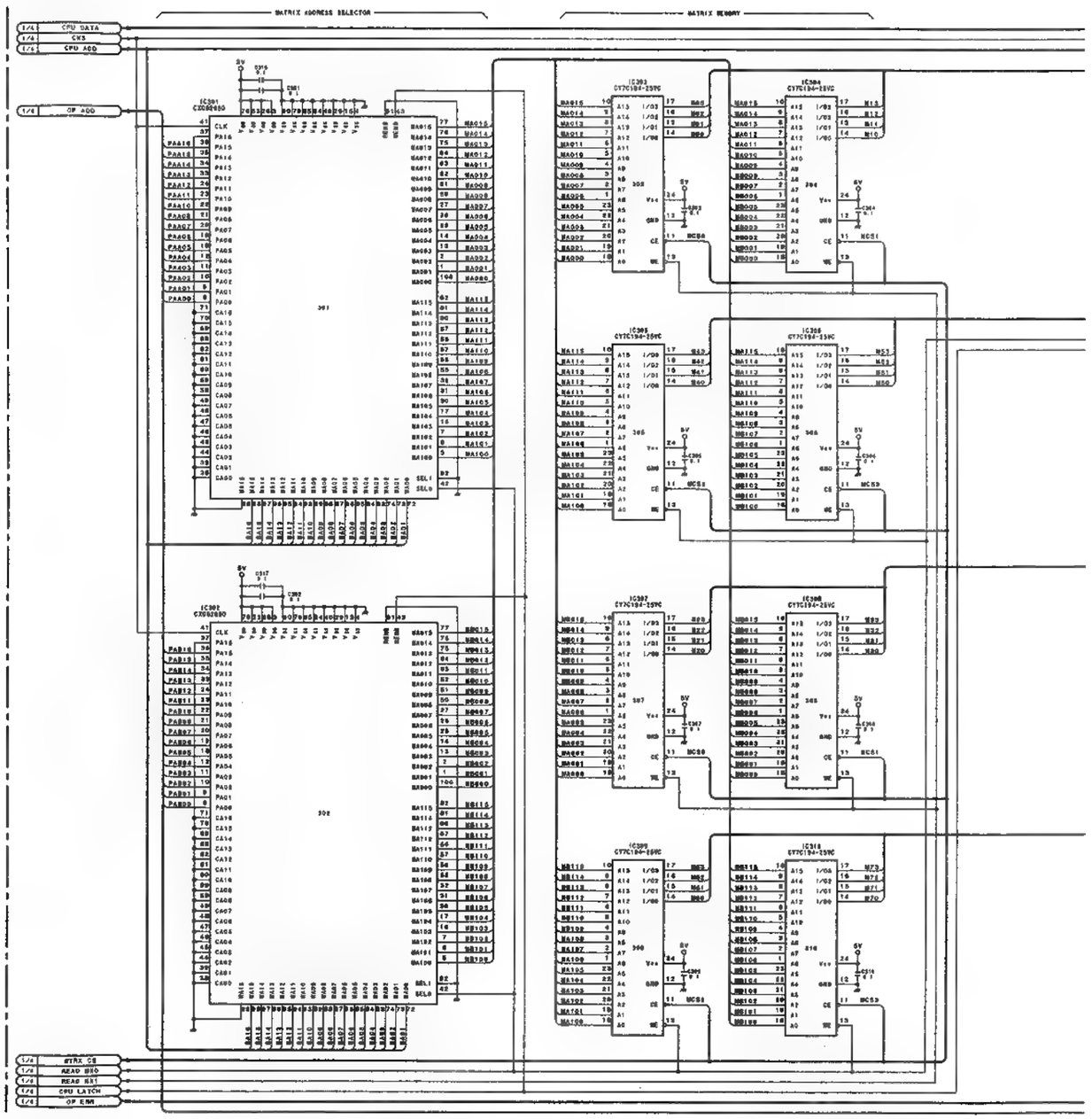

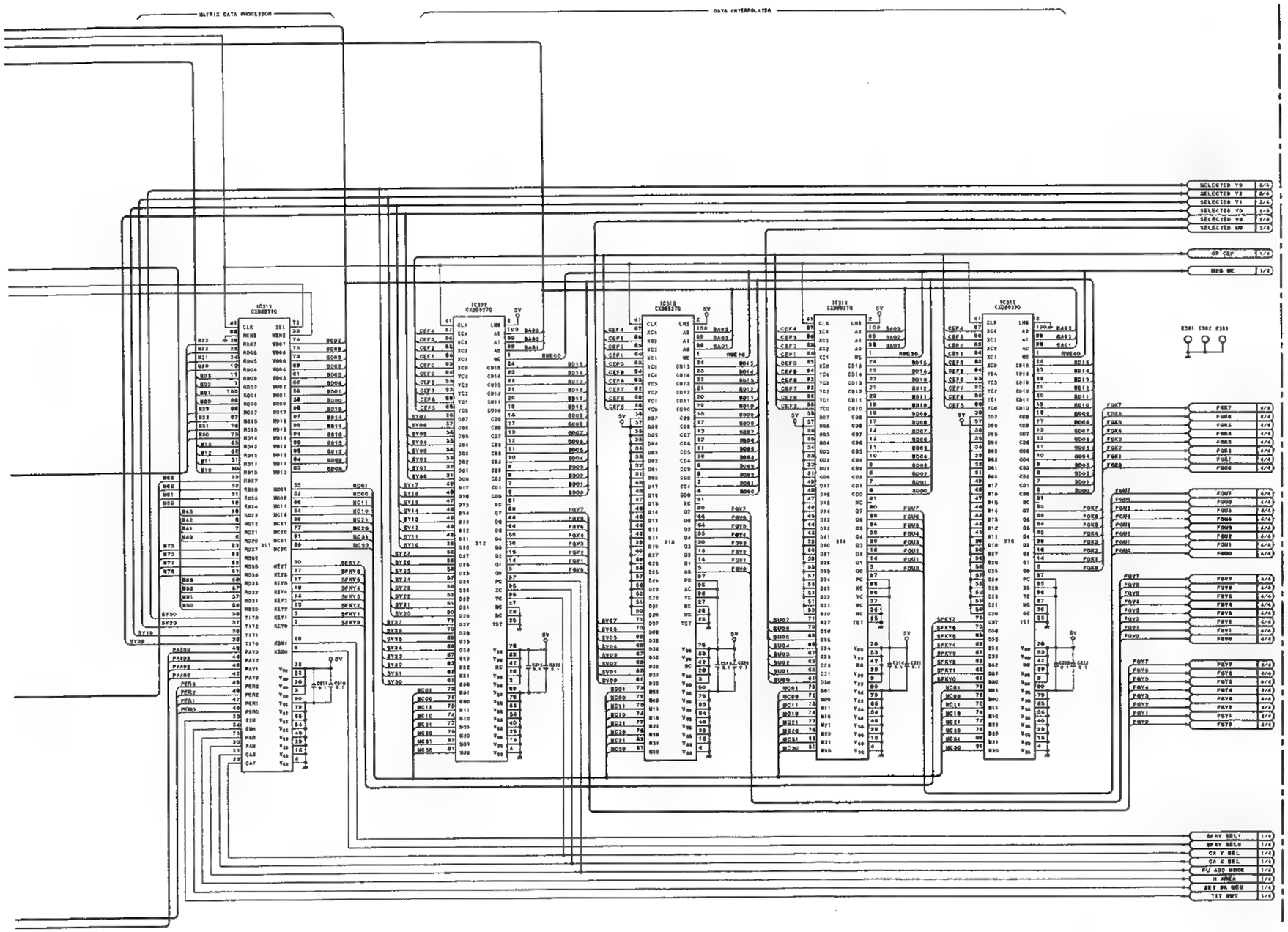

MY-74 (3/4)
PART NO 1-661-351-12
MODEL ESBK-7021
B-ESBK7021-MY74-11

MIX/EFFECTS

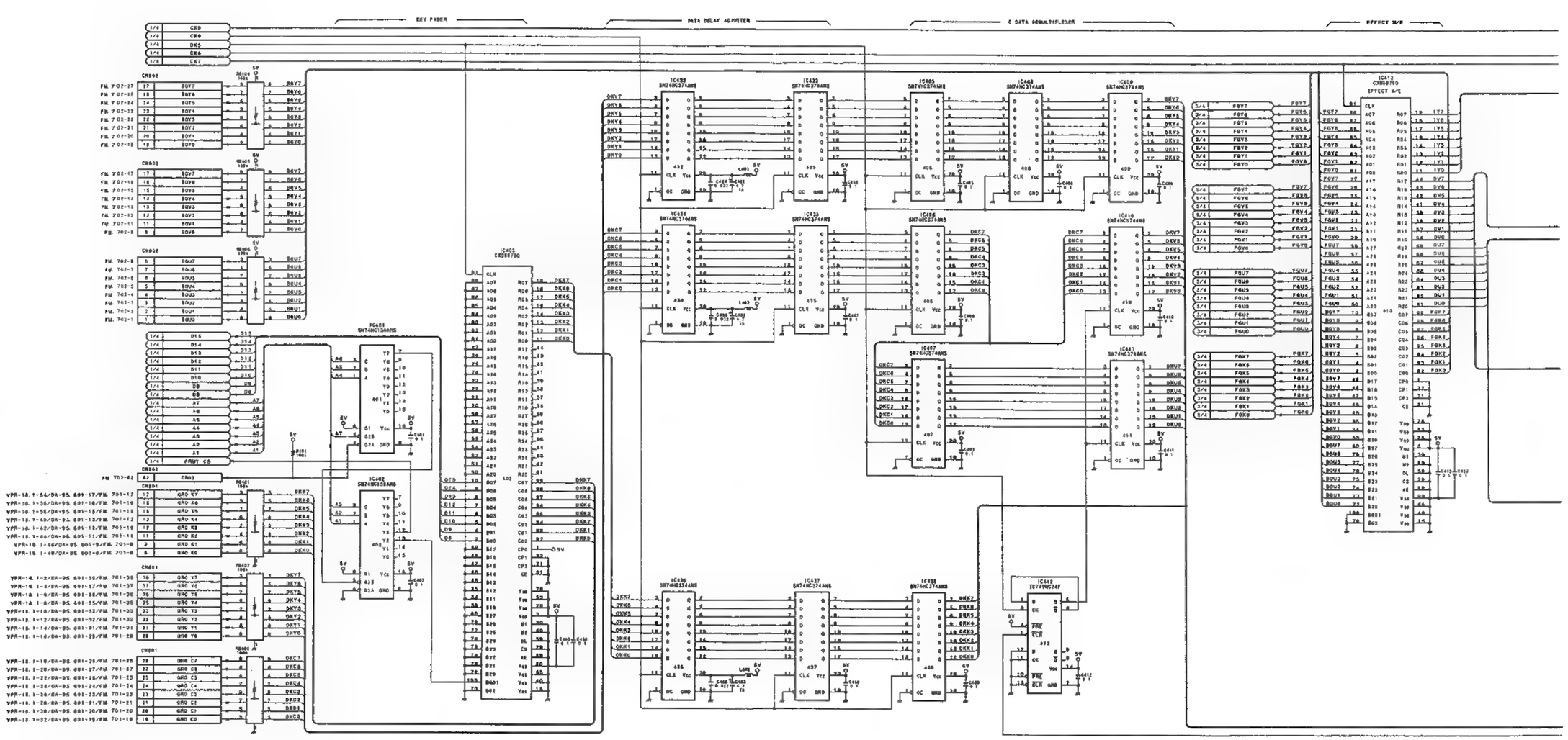

ESBK-7021

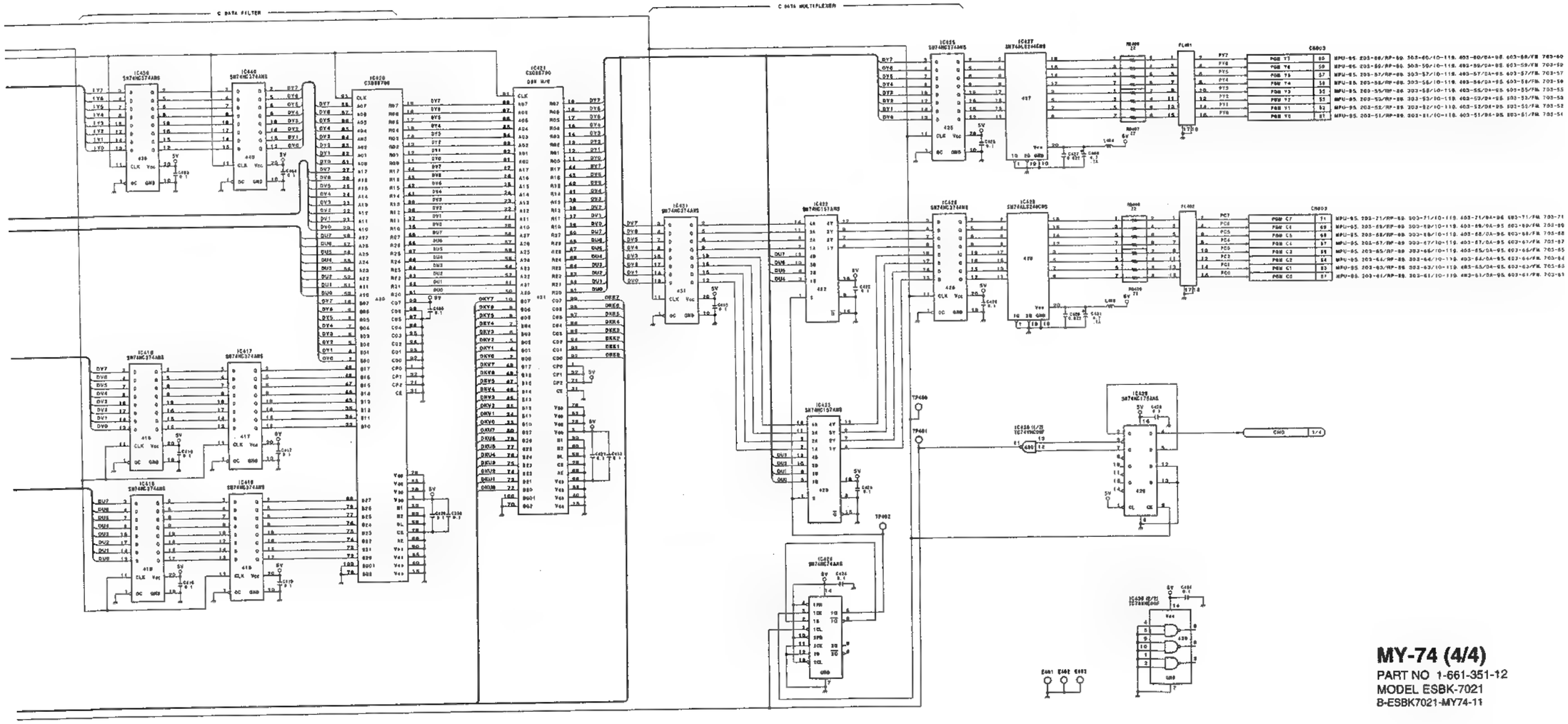

MY-74 (4/4)
PART NO 1-661-351-12
MODEL ESBK-7021
8-ESBK7021-MY74-11

PRE-PROCESSOR

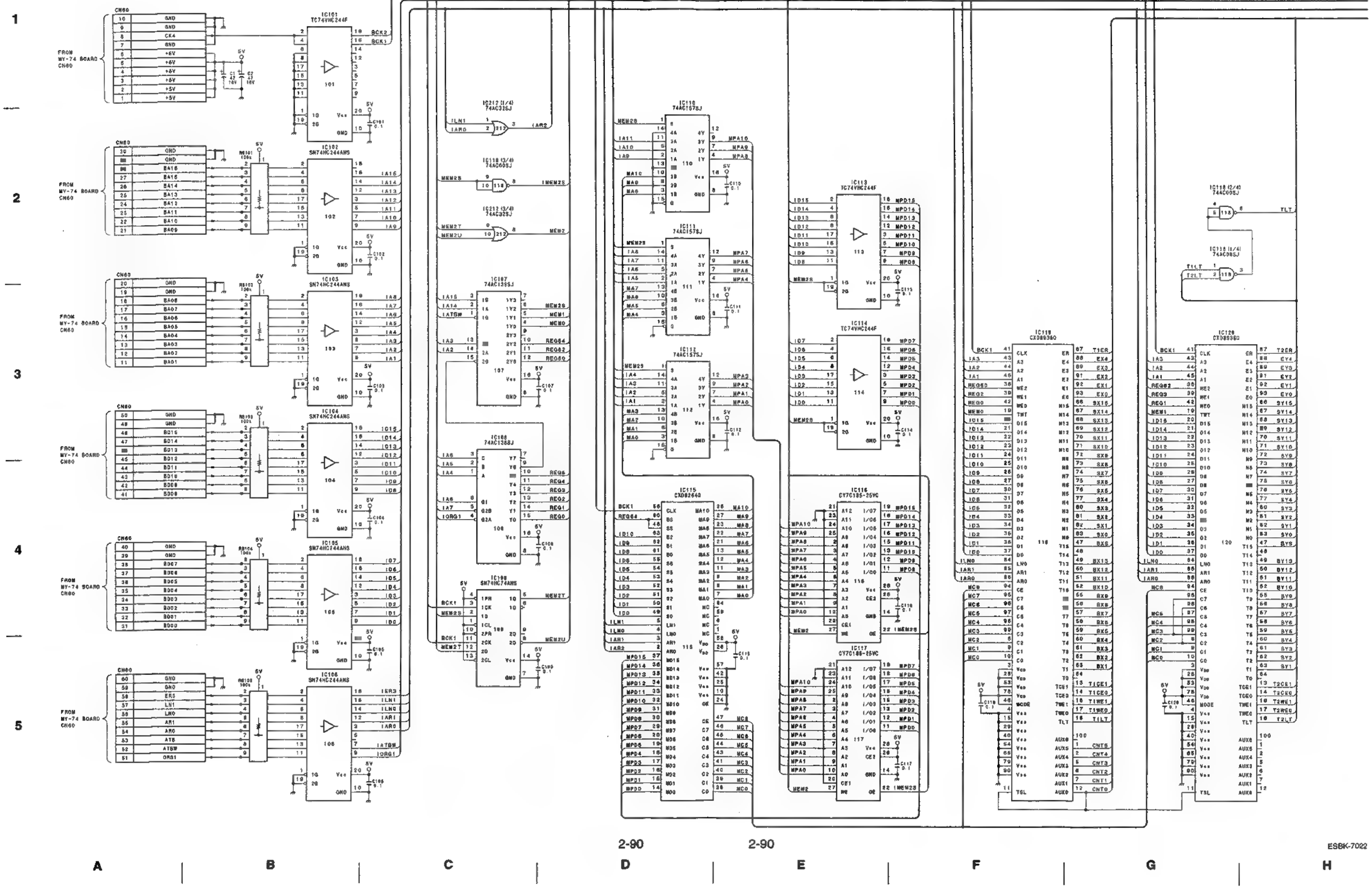

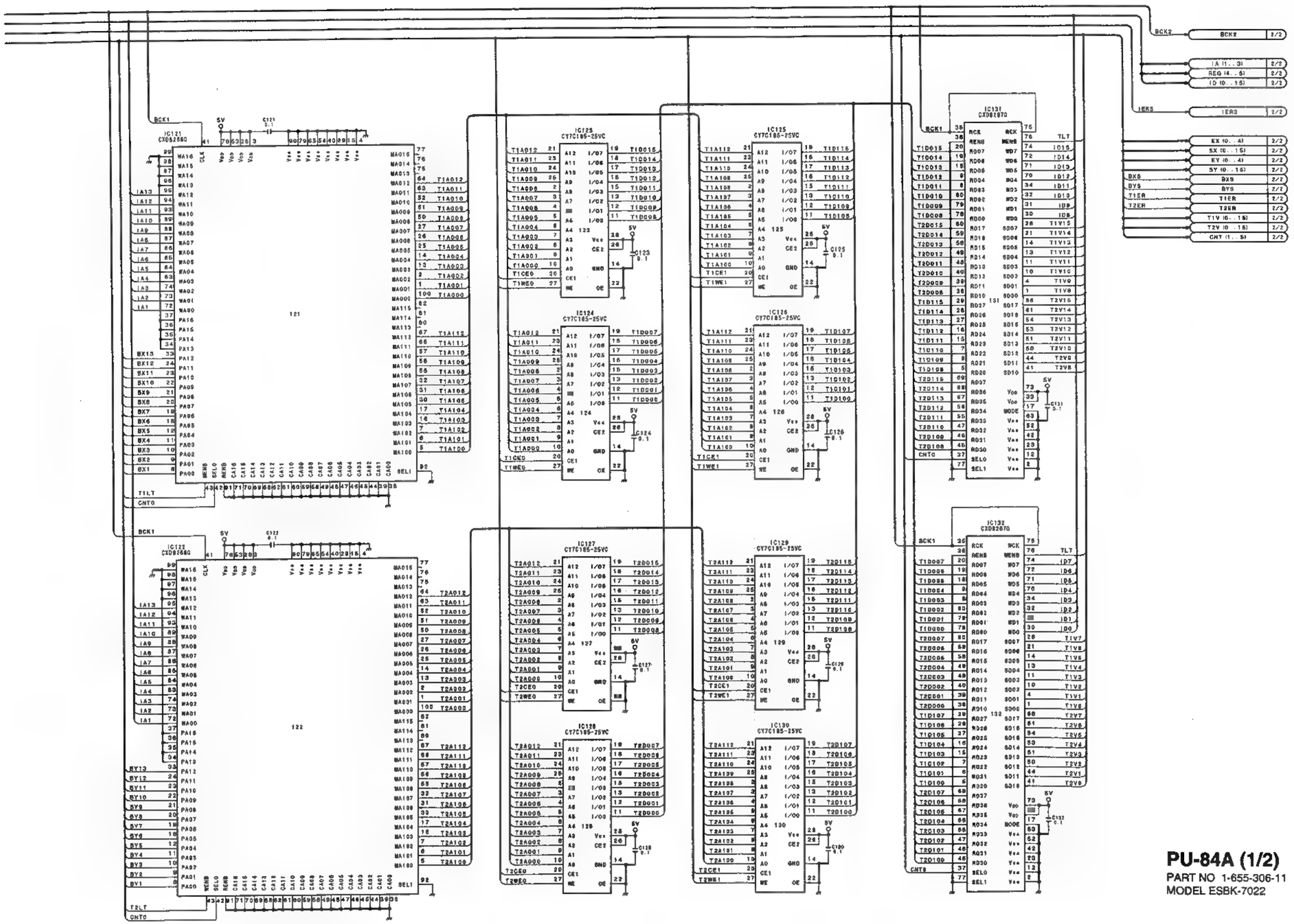

2-91 2-91

ESBK-7022

PU-84A (1/2)
PART NO 1-655-306-11
MODEL ESBK-7022

POST-PROCESSOR

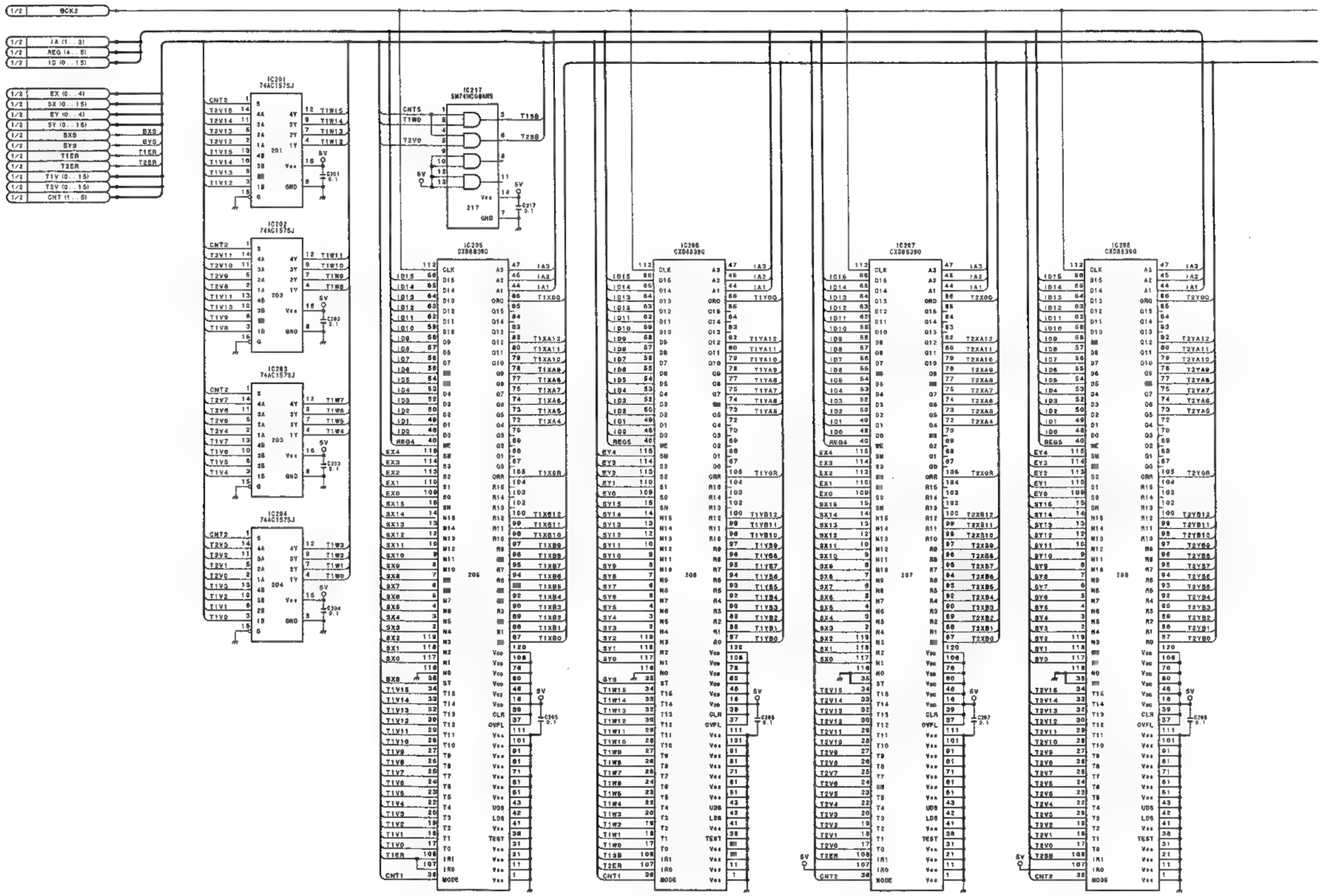

ESBK-7022

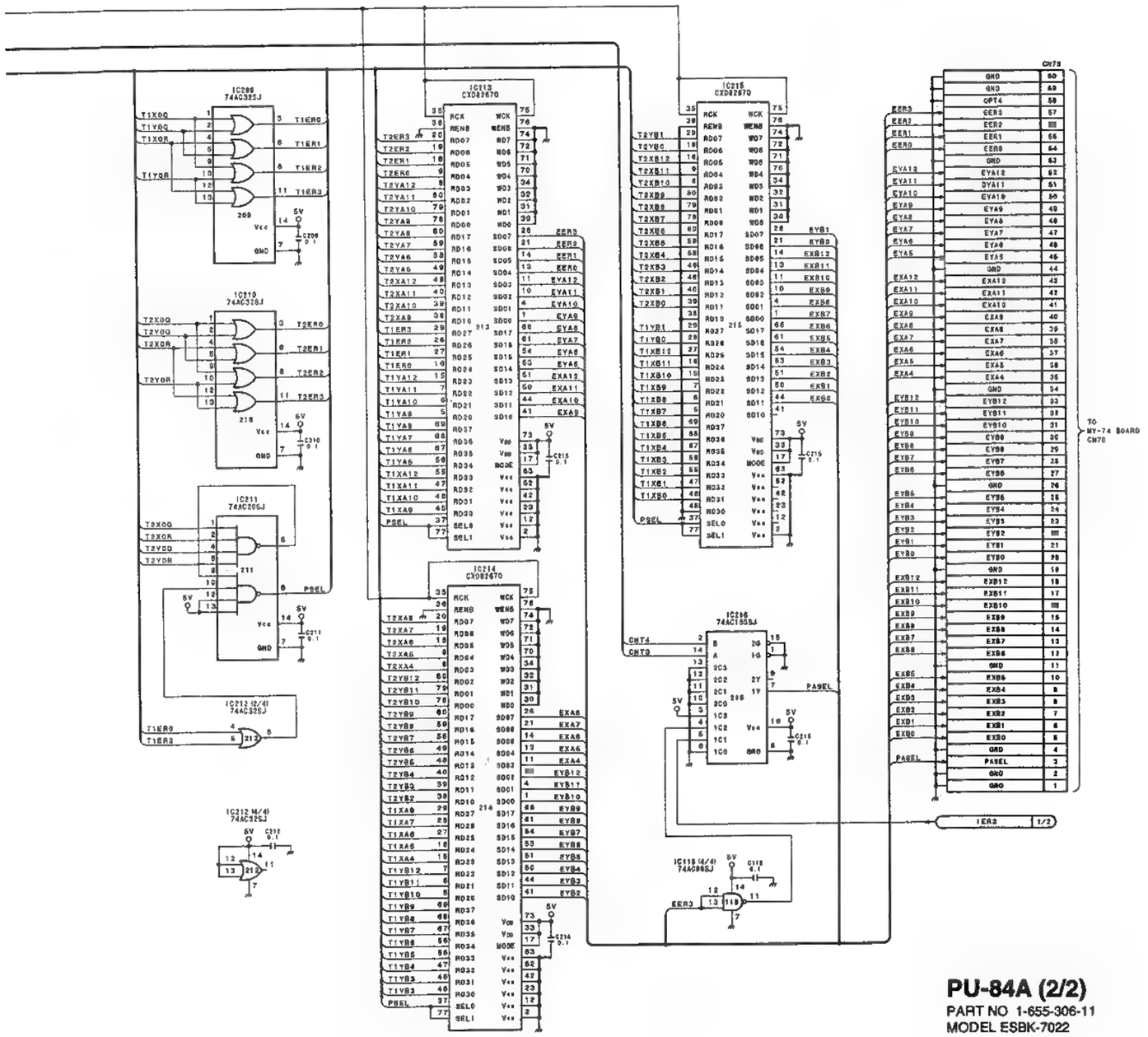

PU-84A (2/2)
PART NO 1-655-306-11
MODEL ESBK-7022

SYSTEM CONTROL

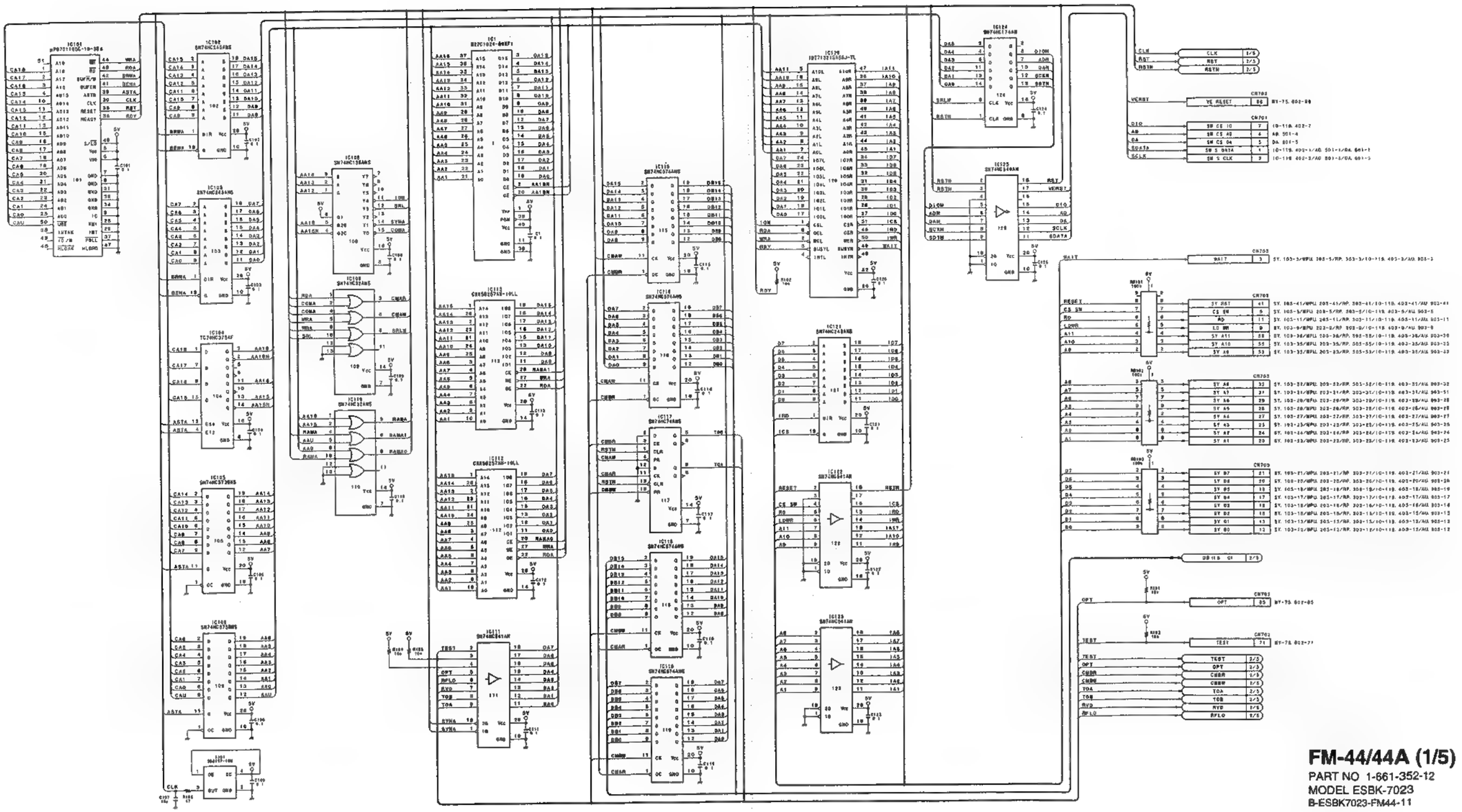

FM-44/44A (1/5)
PART NO 1-661-352-12
MODEL ESBK-7023
B-ESBK7023-FM44-11

EFFECTS CONTROL

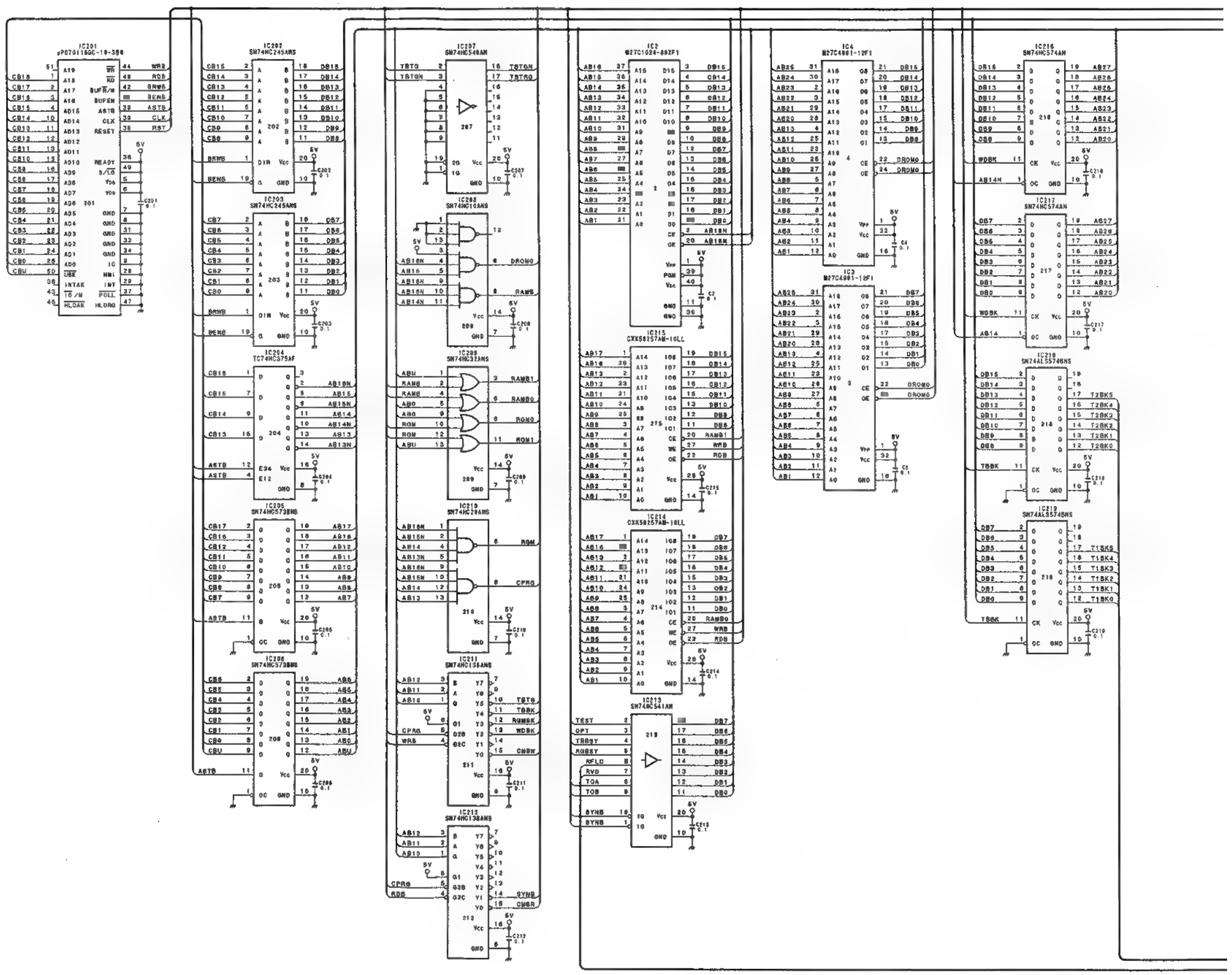

ESBK-7023

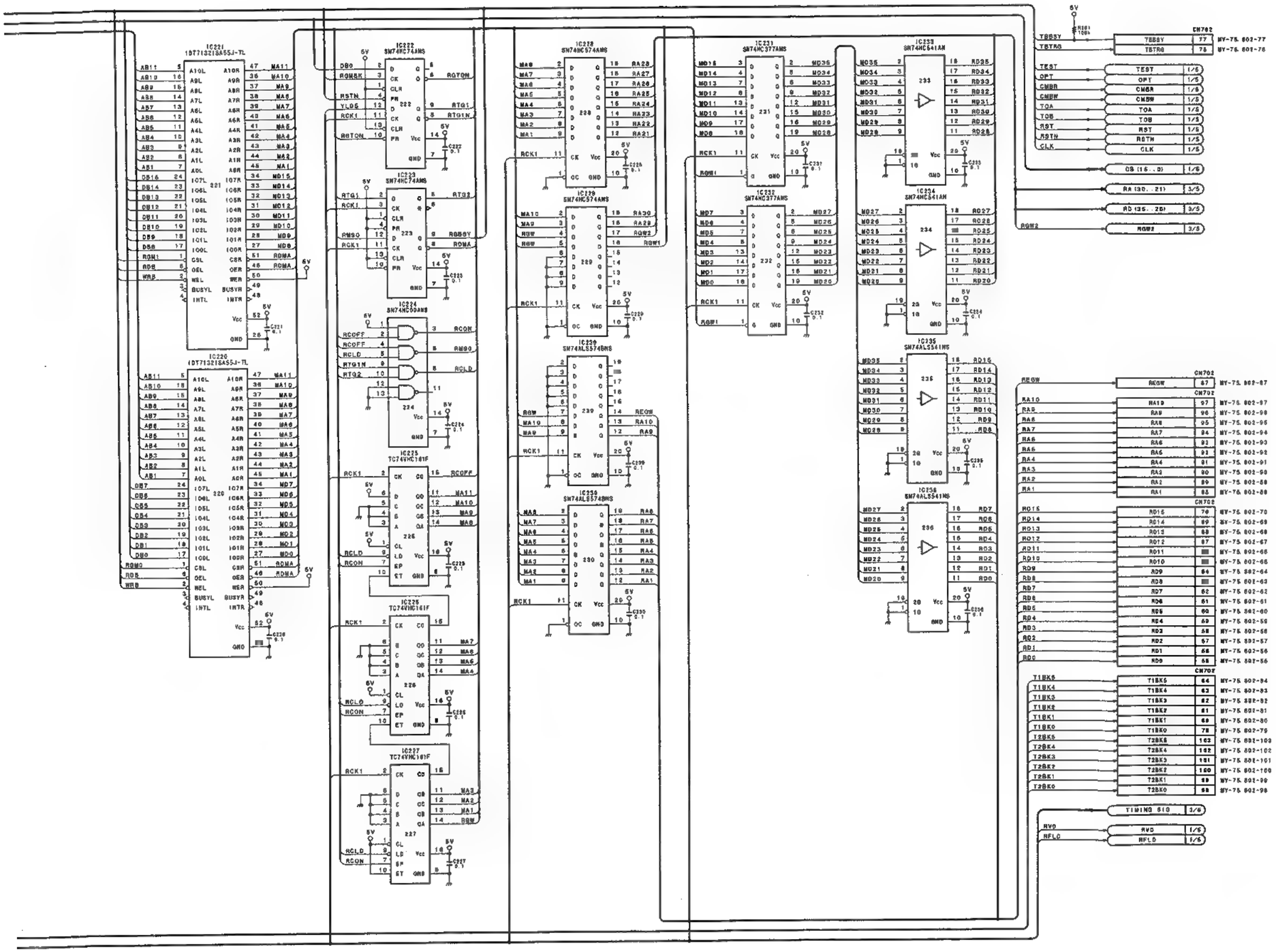

FM-44/44A (2/5)
PART NO 1-661-352-12
MODEL ESBK-7023
B-ESBK7023-FM44-11

X-POINT

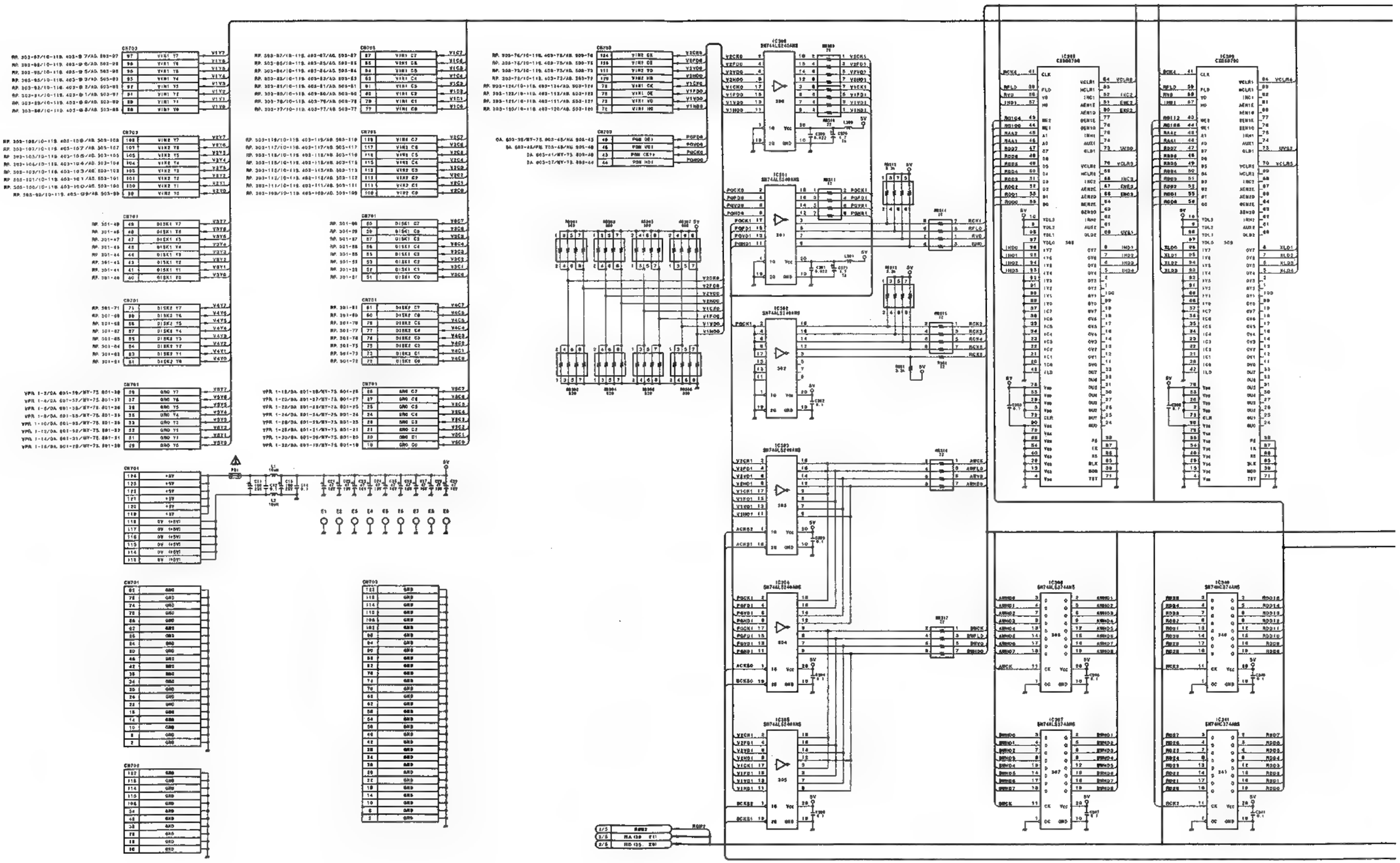

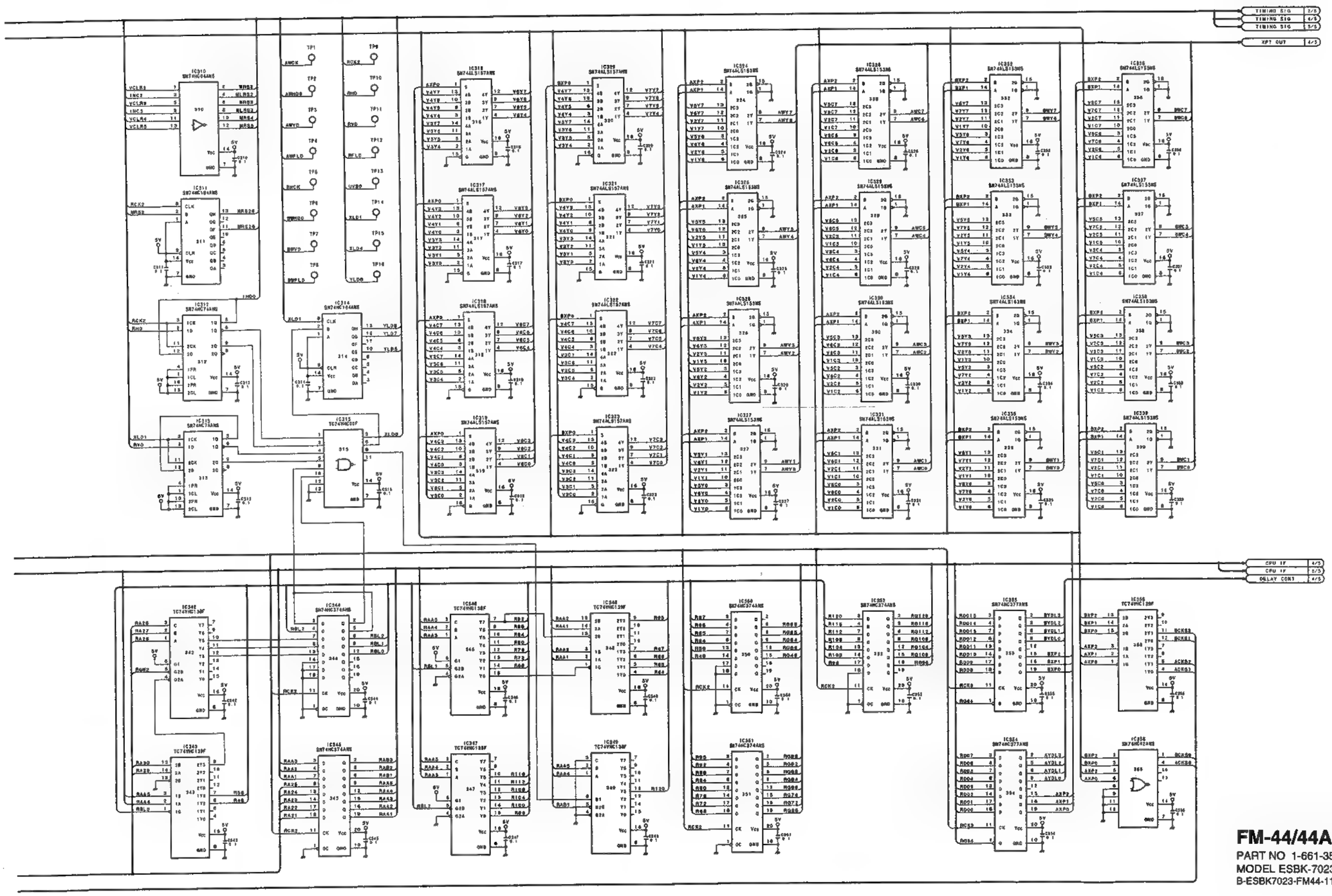

FM-44/44A (3/5)
PART NO 1-661-352-12
MODEL ESBK-7023
B-ESBK7023-FM44-11

FRAME SYNCHRONIZER

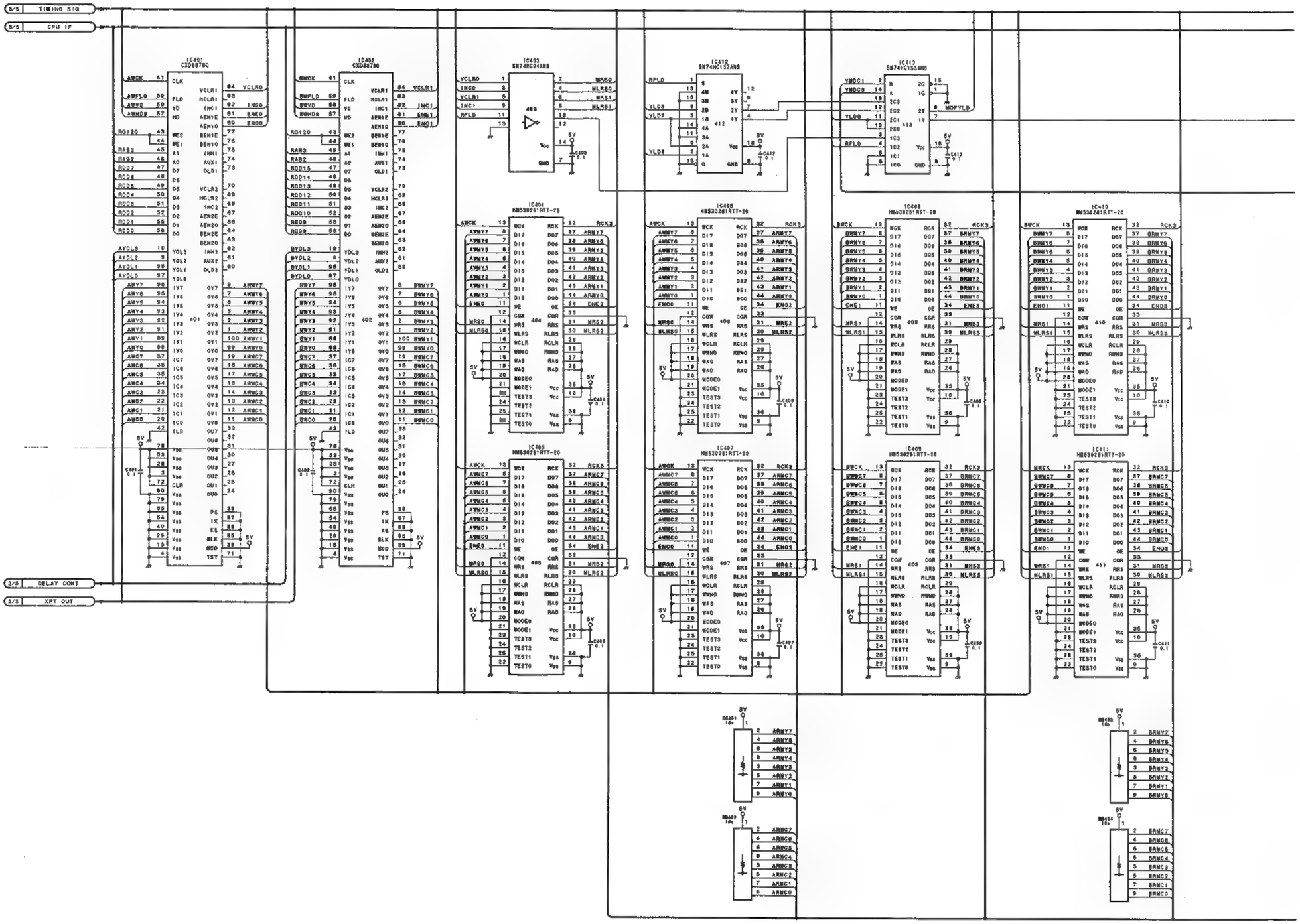

ESBK-7023

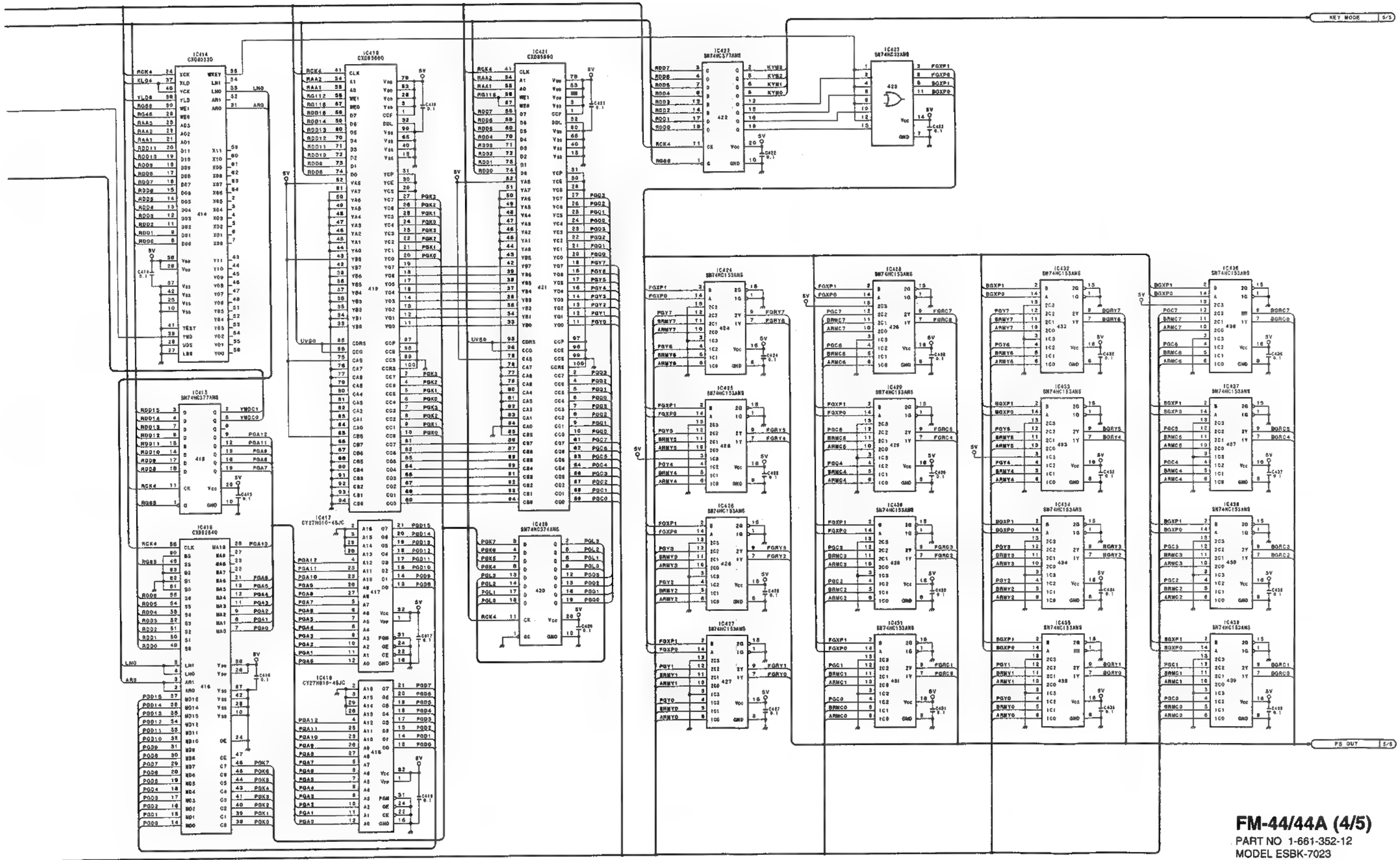

FM-44/44A (4/5)
PART NO 1-661-352-12
MODEL ESBK-7023
B-ESBK7023-FM44-11

ESBK-7023

2-101 2-101

COLOR CORRECTOR & CHROMA KEY

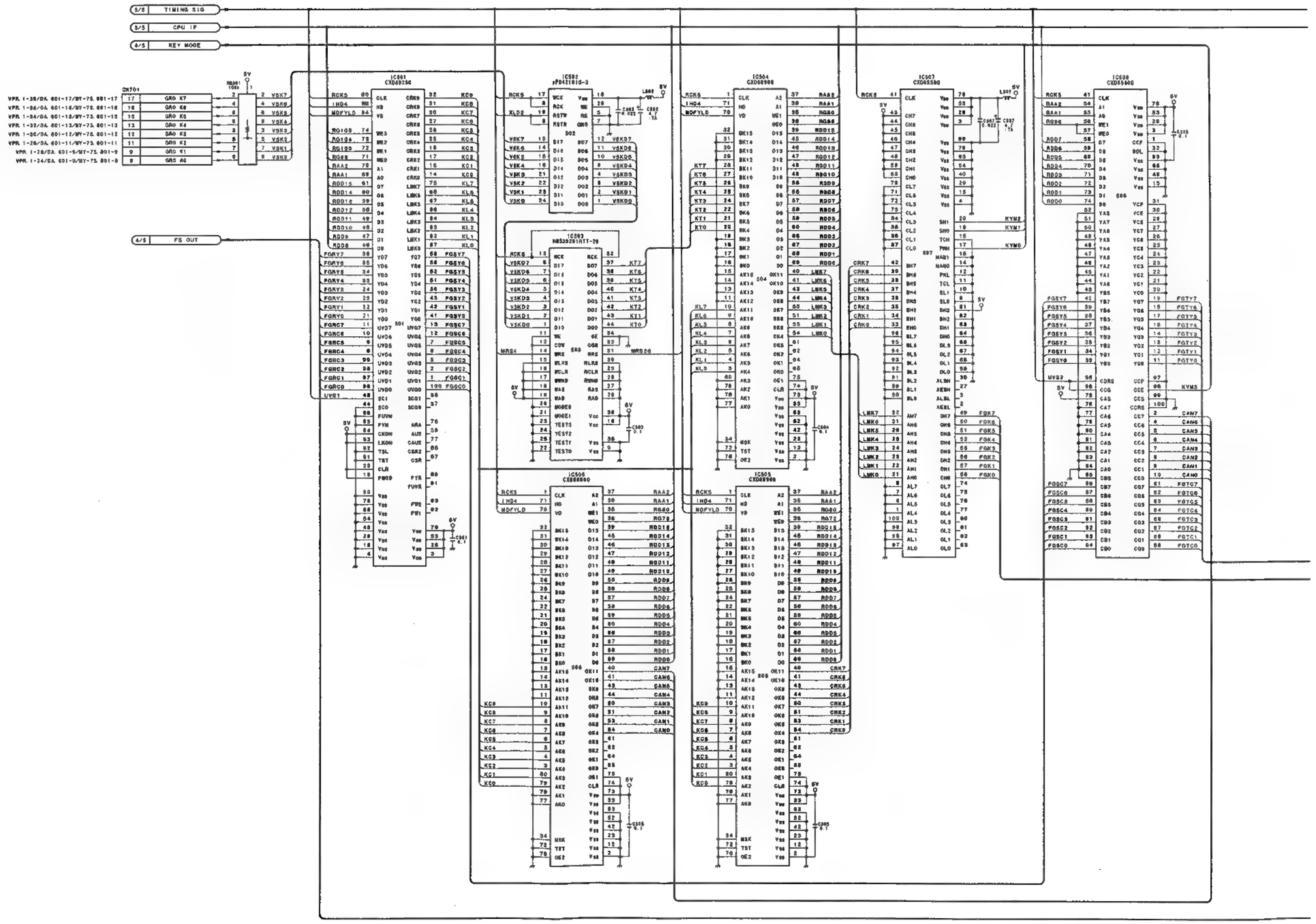

ESBK-7023

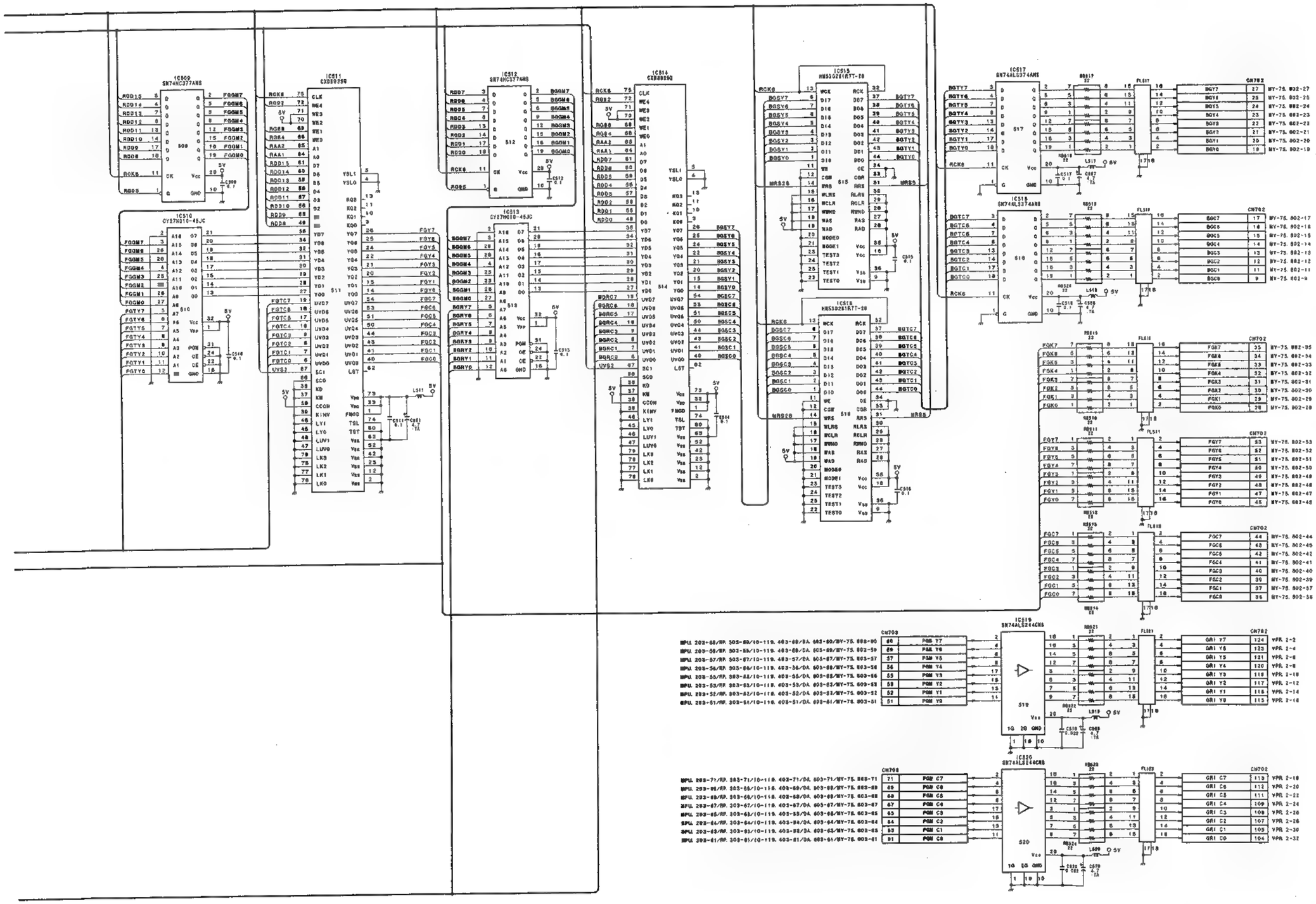

FM-44/44A (5/5)
PART NO 1-661-352-12
MODEL ESBK-7023
B-ESBK7023-FM44-11

CLOCK & DMA INTERFACE

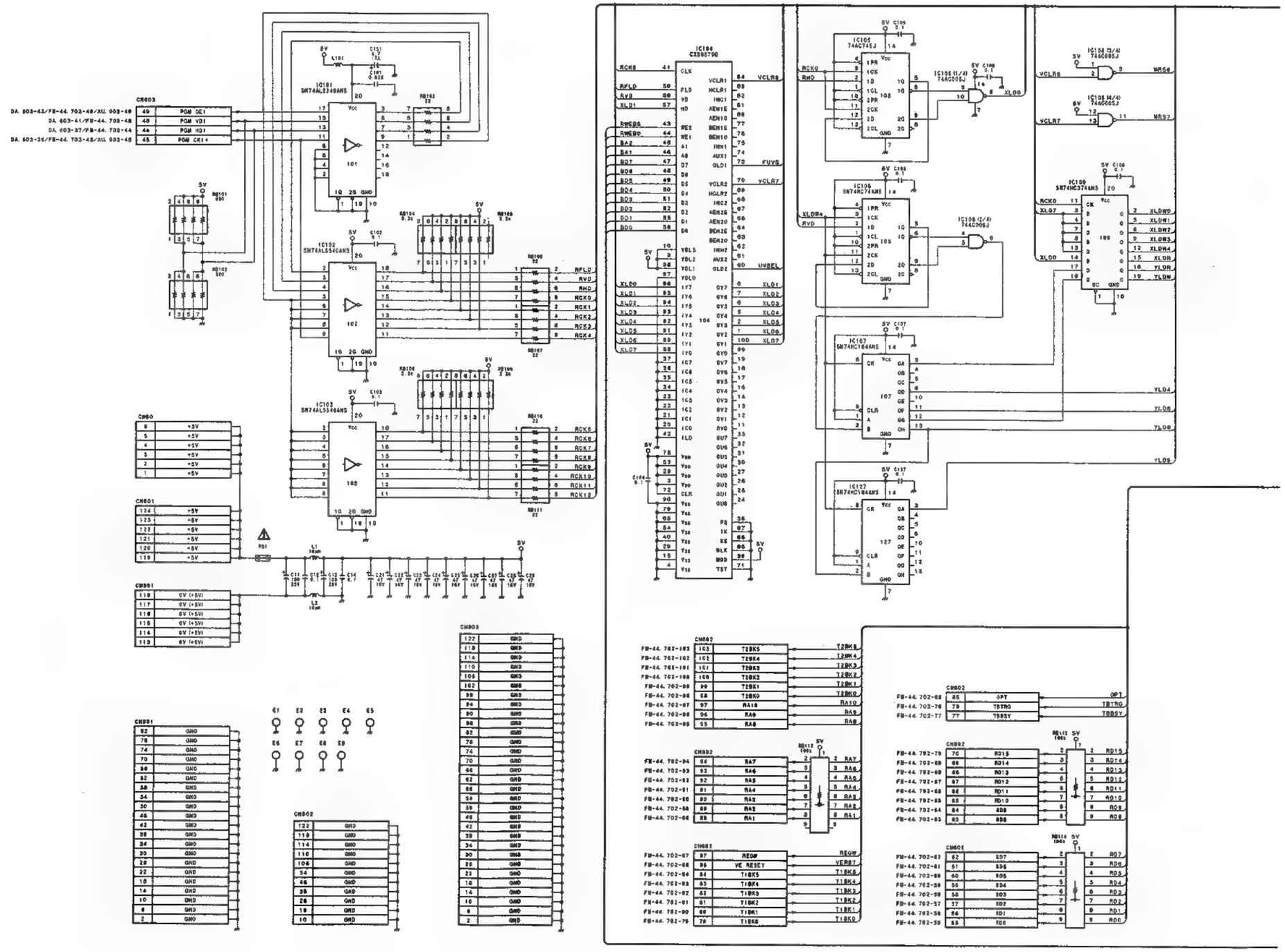

2-104 2-104

ESBK-7023

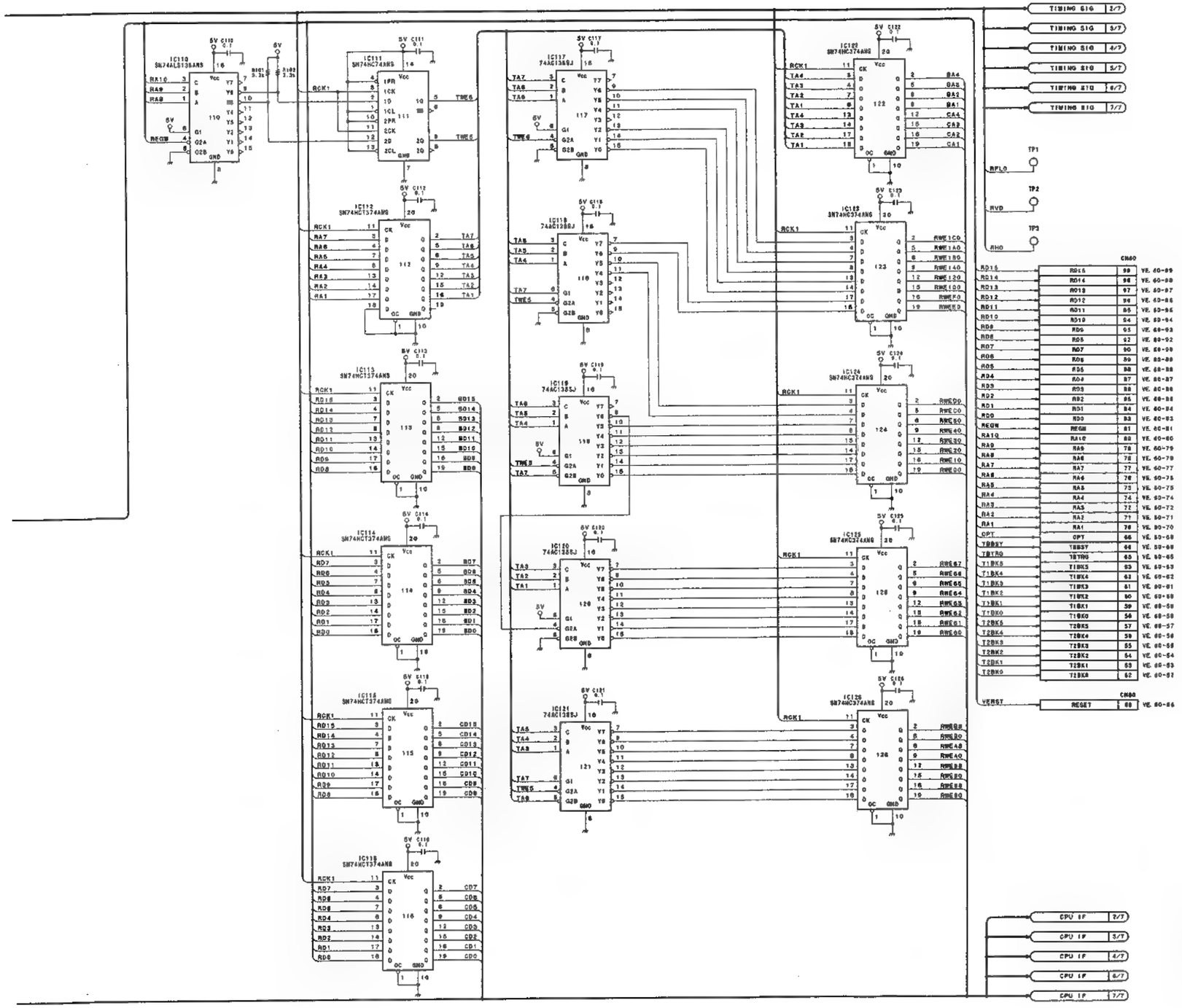

MY-75 (1/7)
PART NO 1-661-353-12
MODEL ESBK-7023
B-ESBK7023-MY75-11

WIPE GEN

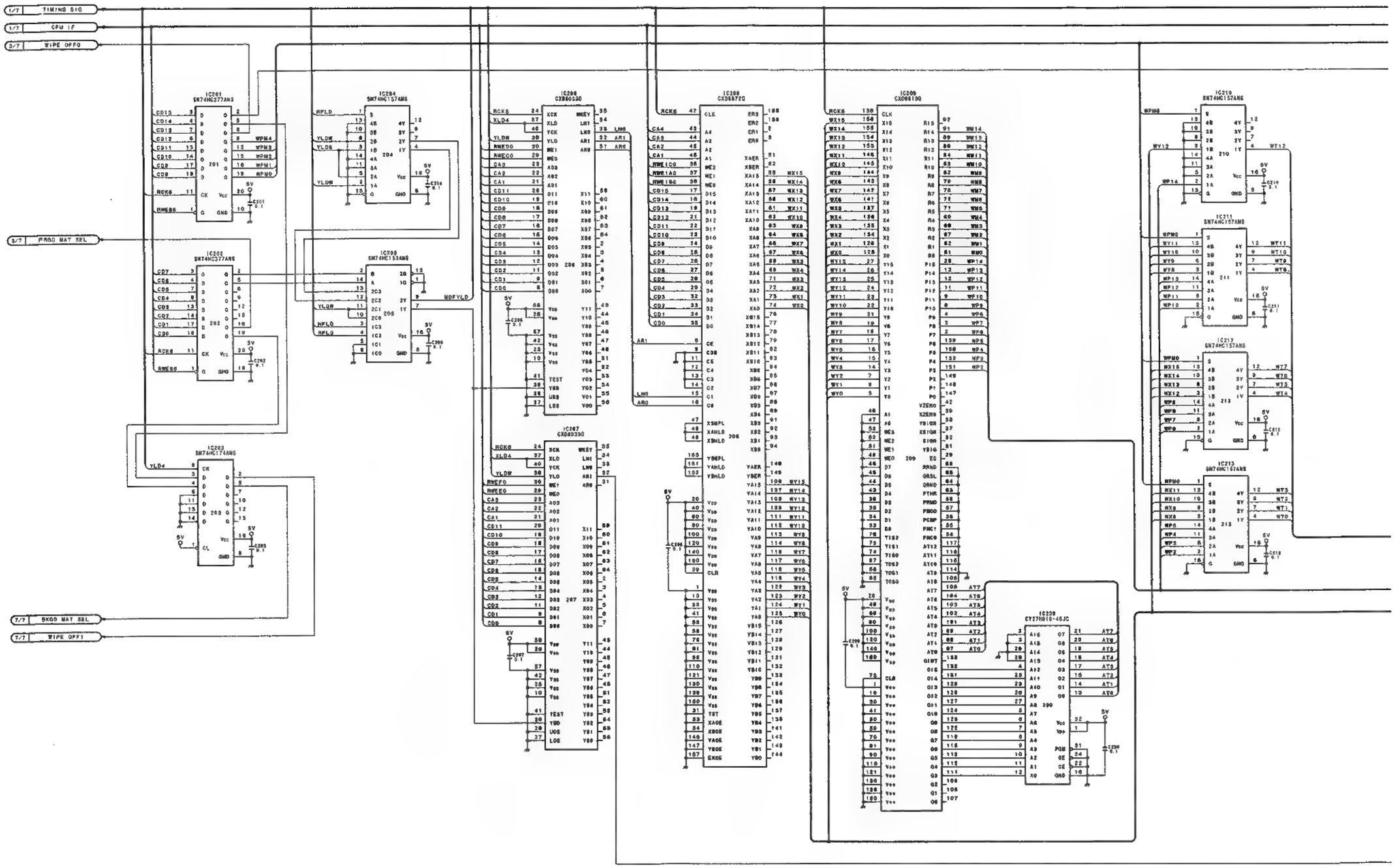
1/7 TIMING SIG
1/7 CPU IF
3/7 WIPE OFFQ
3/7 FROG MAT SEL
7/7 BKGD MAT SEL
7/7 WIPE OFF1
IC201 SN74HC377AN3
IC202 SN74HC377ANS
IC203 SN74HC174ANS
IC204 SN74HC157ANS
IC205 SN74HC153ANS
IC206 CXD8672Q
IC207 CXD8033Q
IC208 CXD8613Q
IC209 SN74HC157ANS
IC210 SN74HC157ANS
IC211 SN74HC157ANS
IC212 SN74HC157ANS
IC213 SN74HC157ANS
IC230 CY27H010-45JC
MDFYLD
5V

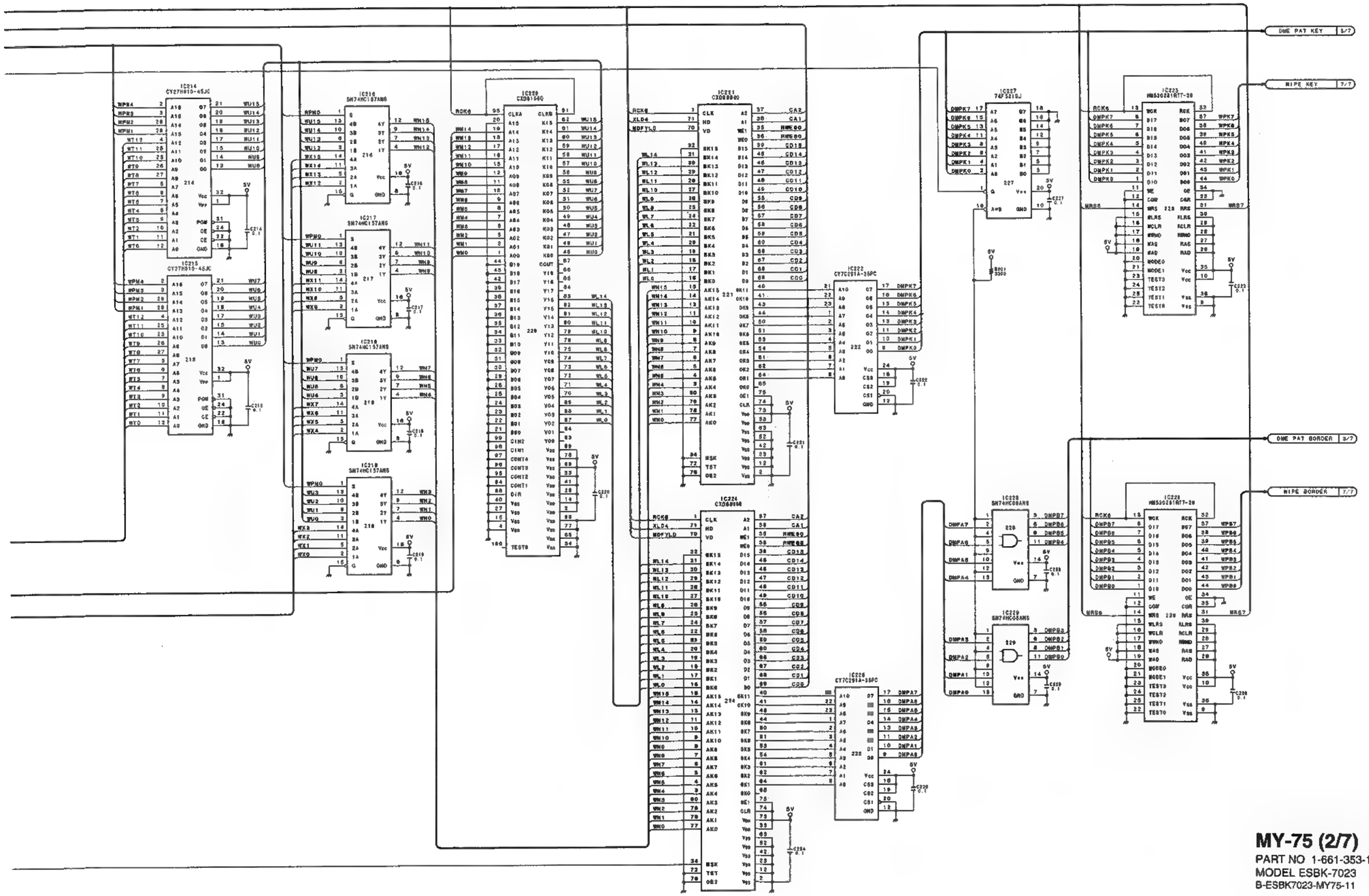

MY-75 (2/7)
PART NO 1-661-353-12
MODEL ESBK-7023
B-ESBK7023-MY75-11

LOW PASS FILTER

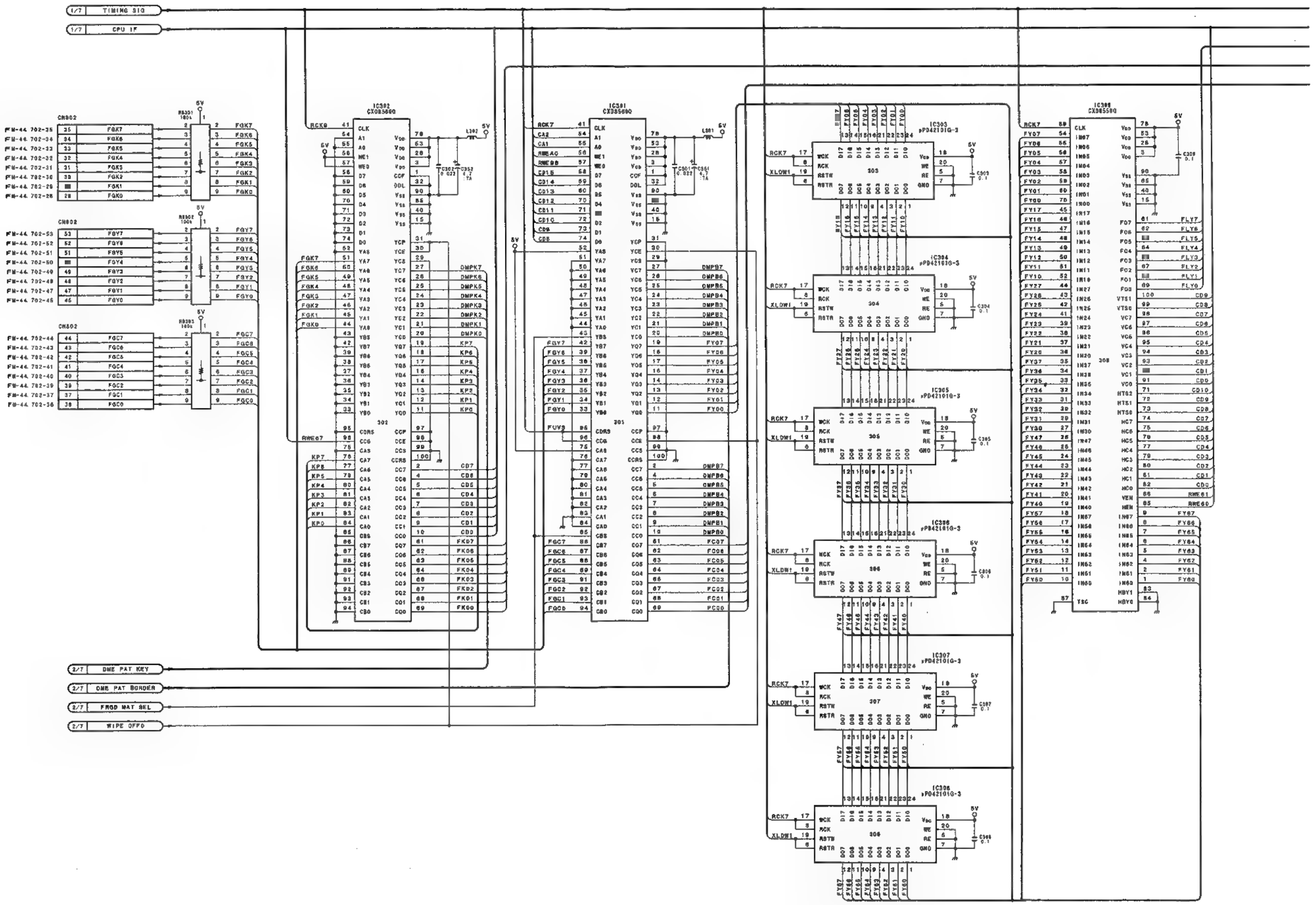

ESBK-7023

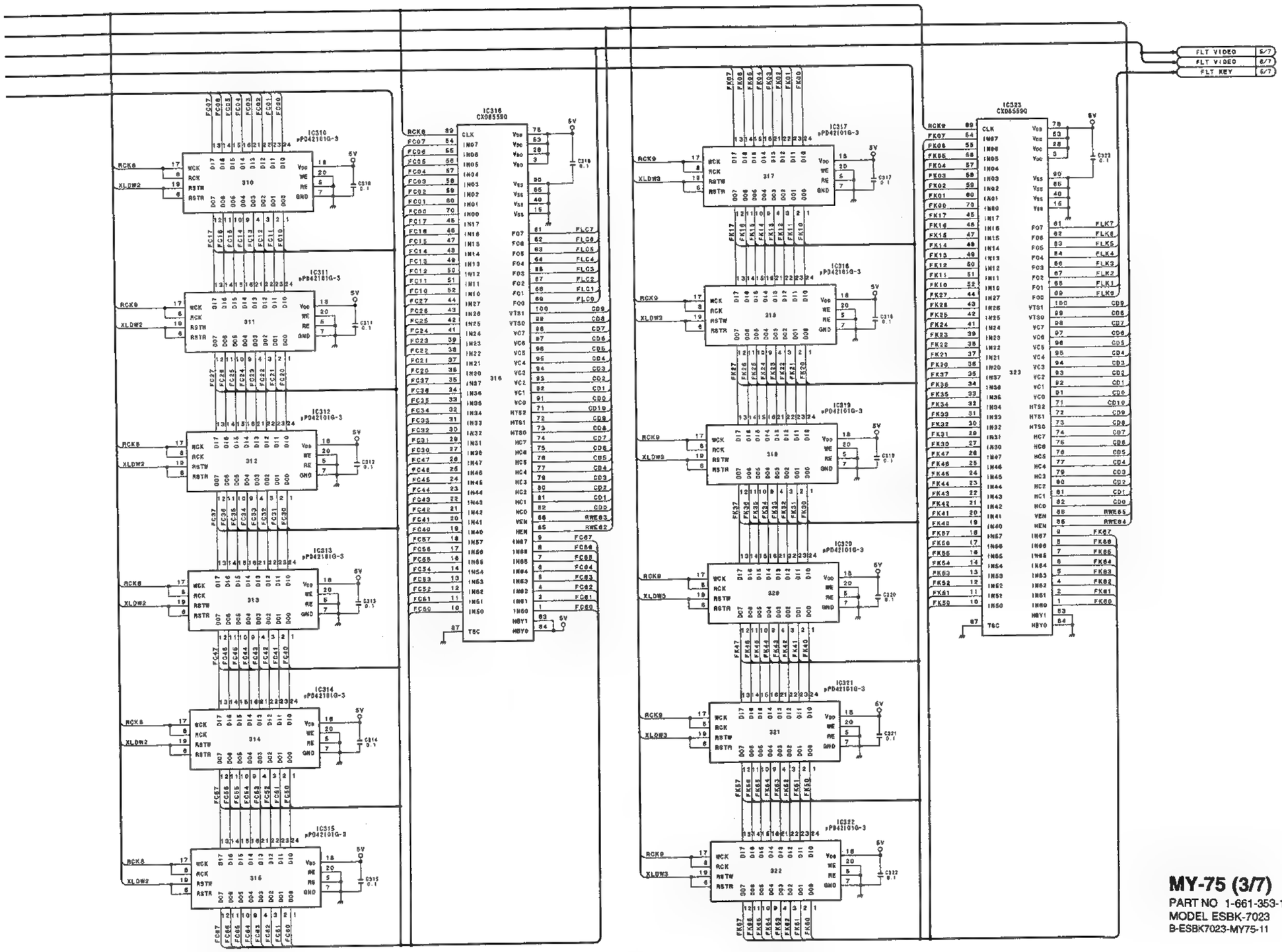

MY-75 (3/7)
PART NO 1-661-353-12
MODEL ESBK-7023
B-ESBK7023-MY75-11

VIDEO TIMING & ADDRESS GEN

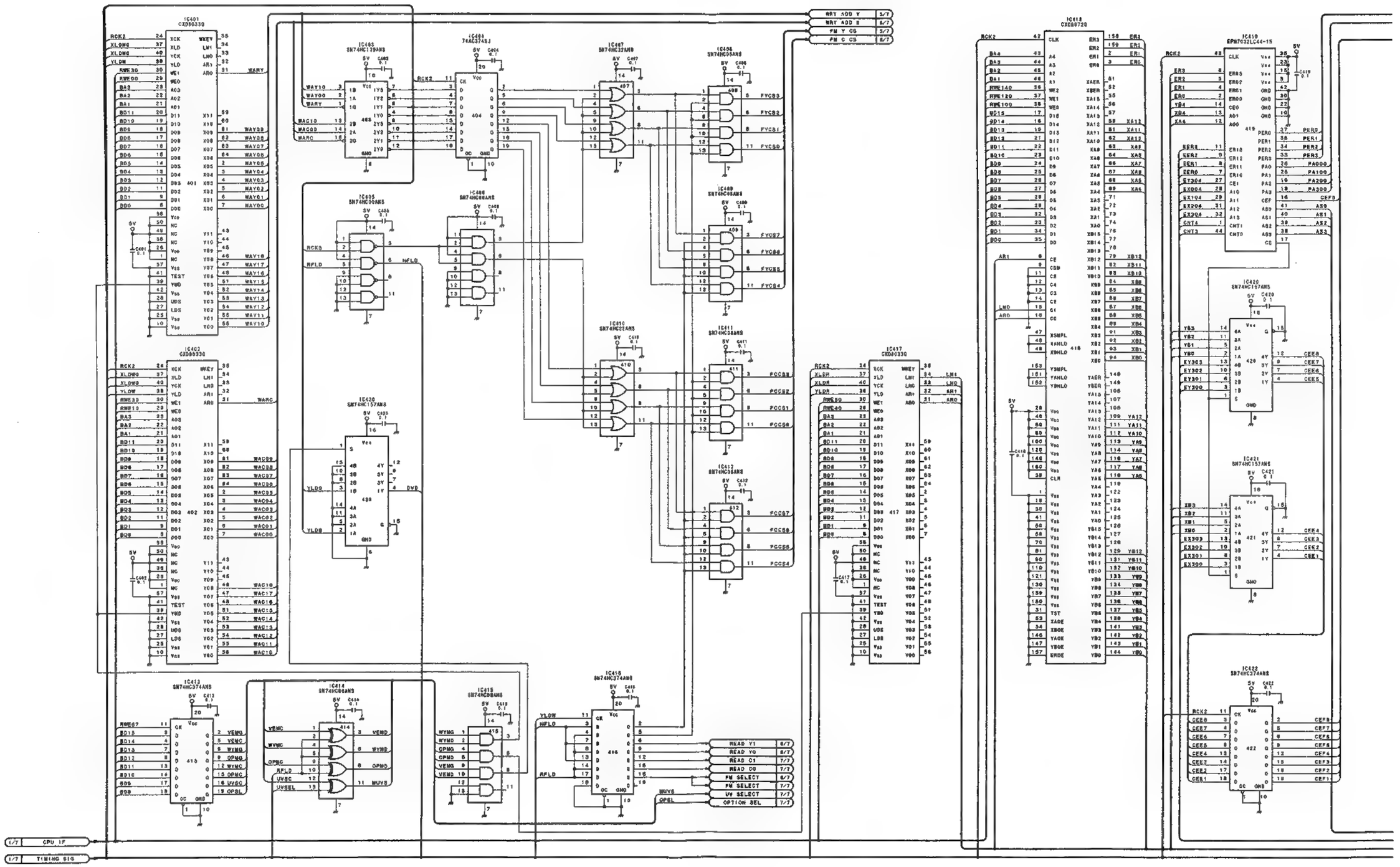

ESBK-7023

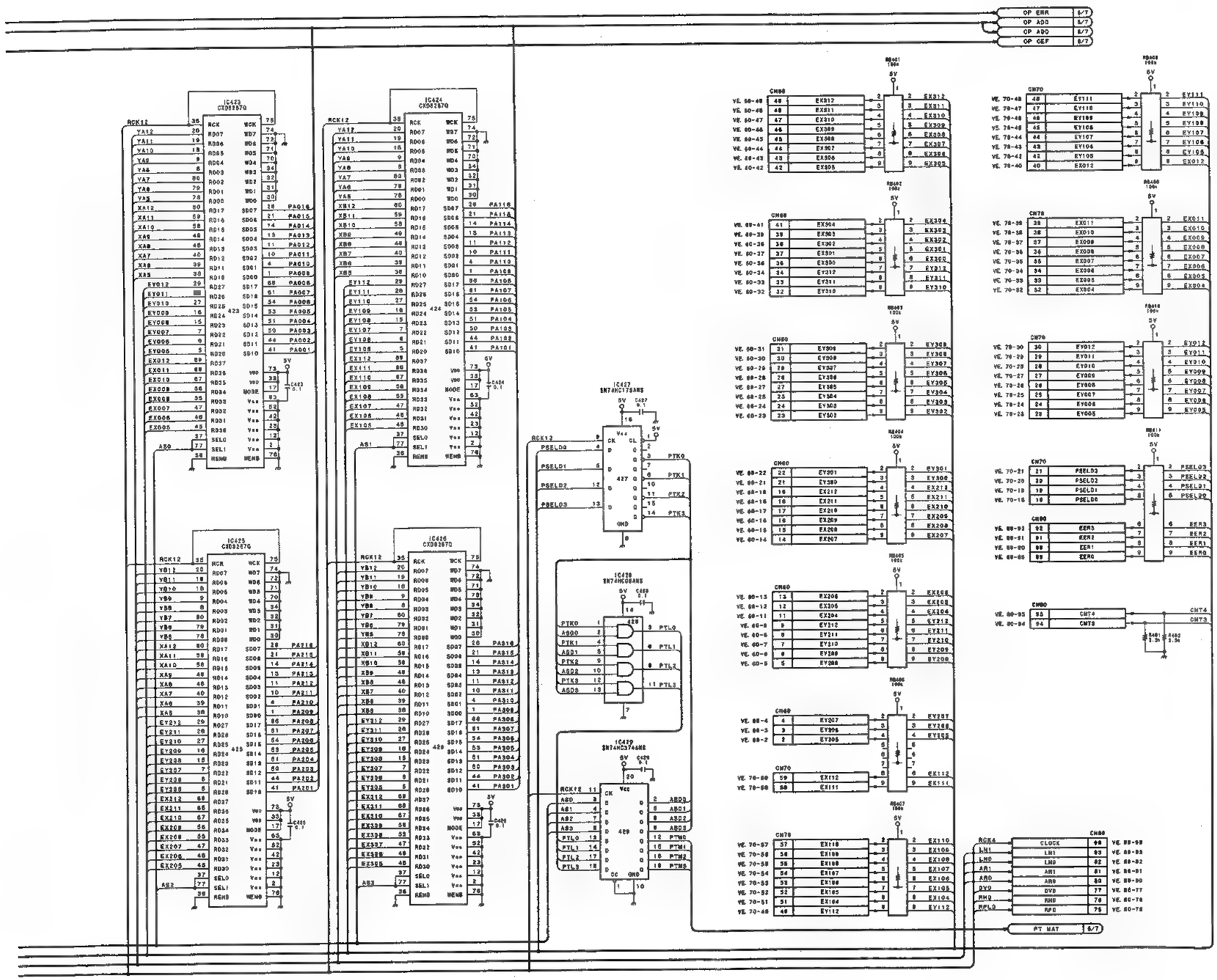

MY-75 (4/7)
PART NO 1-661-353-12
MODEL ESBK-7023
B-ESBK7023-MY75-11

FRAME MEMORY 1

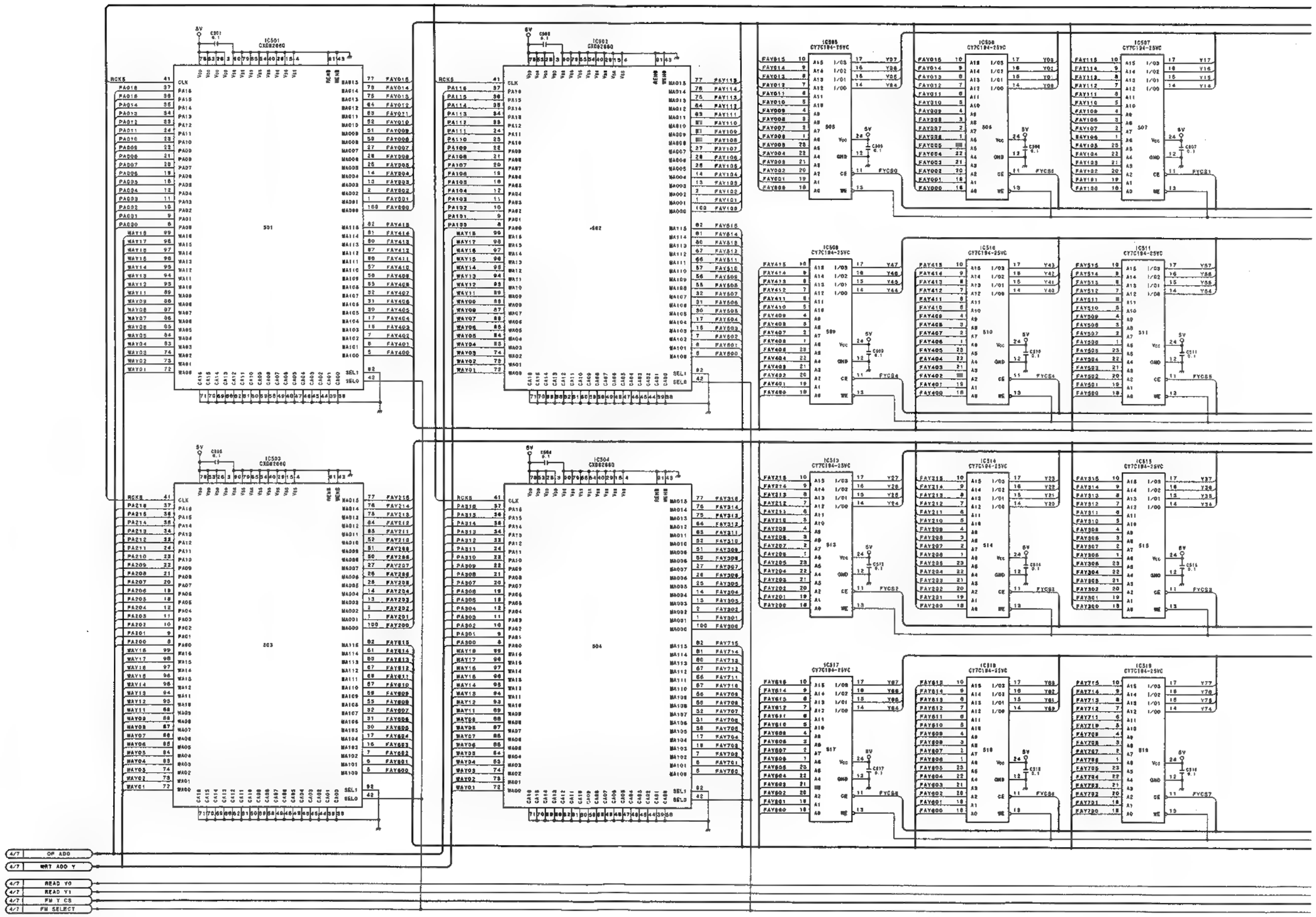

2-112 2-112

ESBK-7023

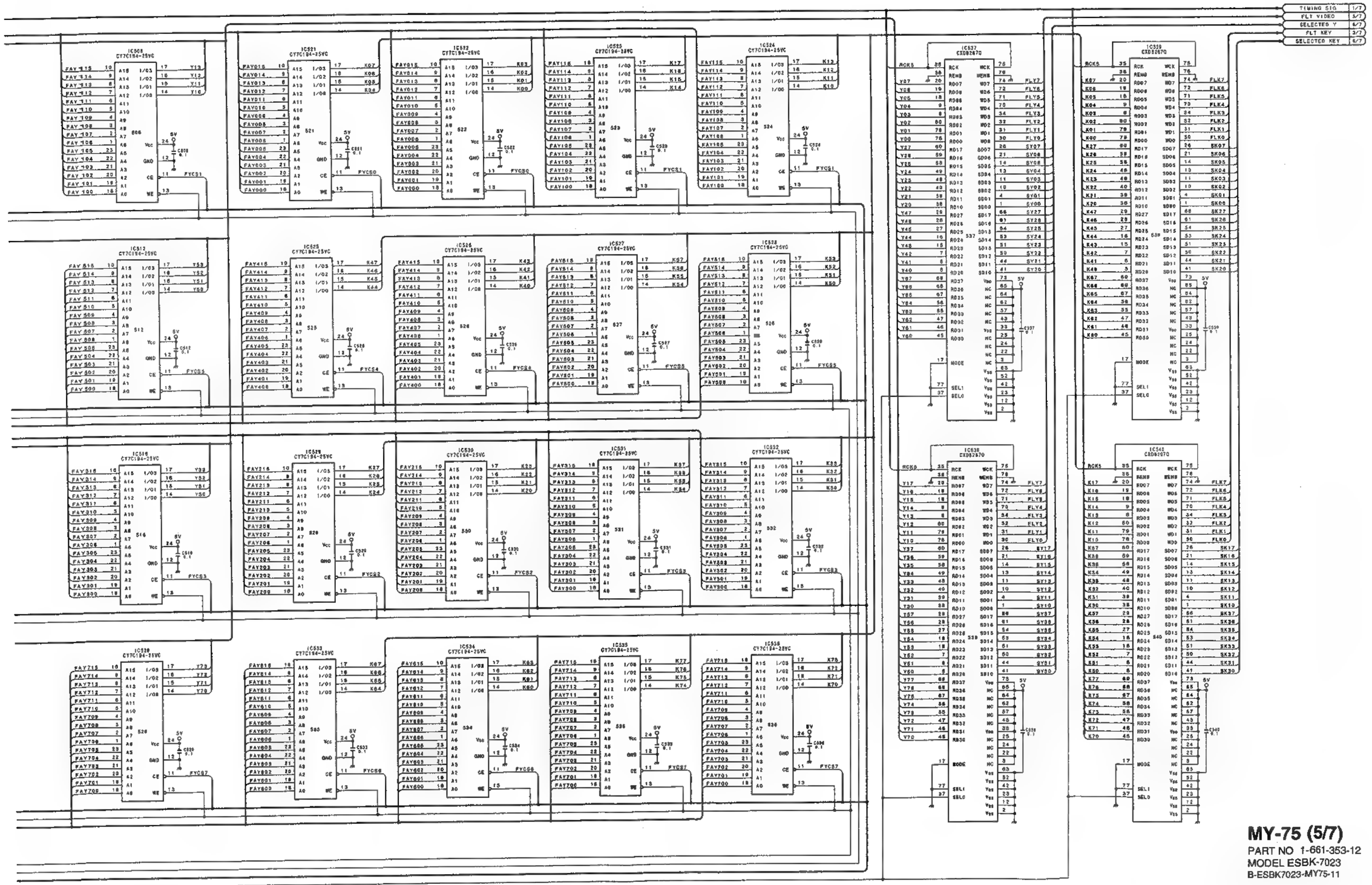

ESBK-7023

2-113 2-113

MY-75 (5/7)
PART NO 1-661-353-12
MODEL ESBK-7023
B-ESBK7023-MY75-11

FRAME MEMORY 2 & INTERPOLATER

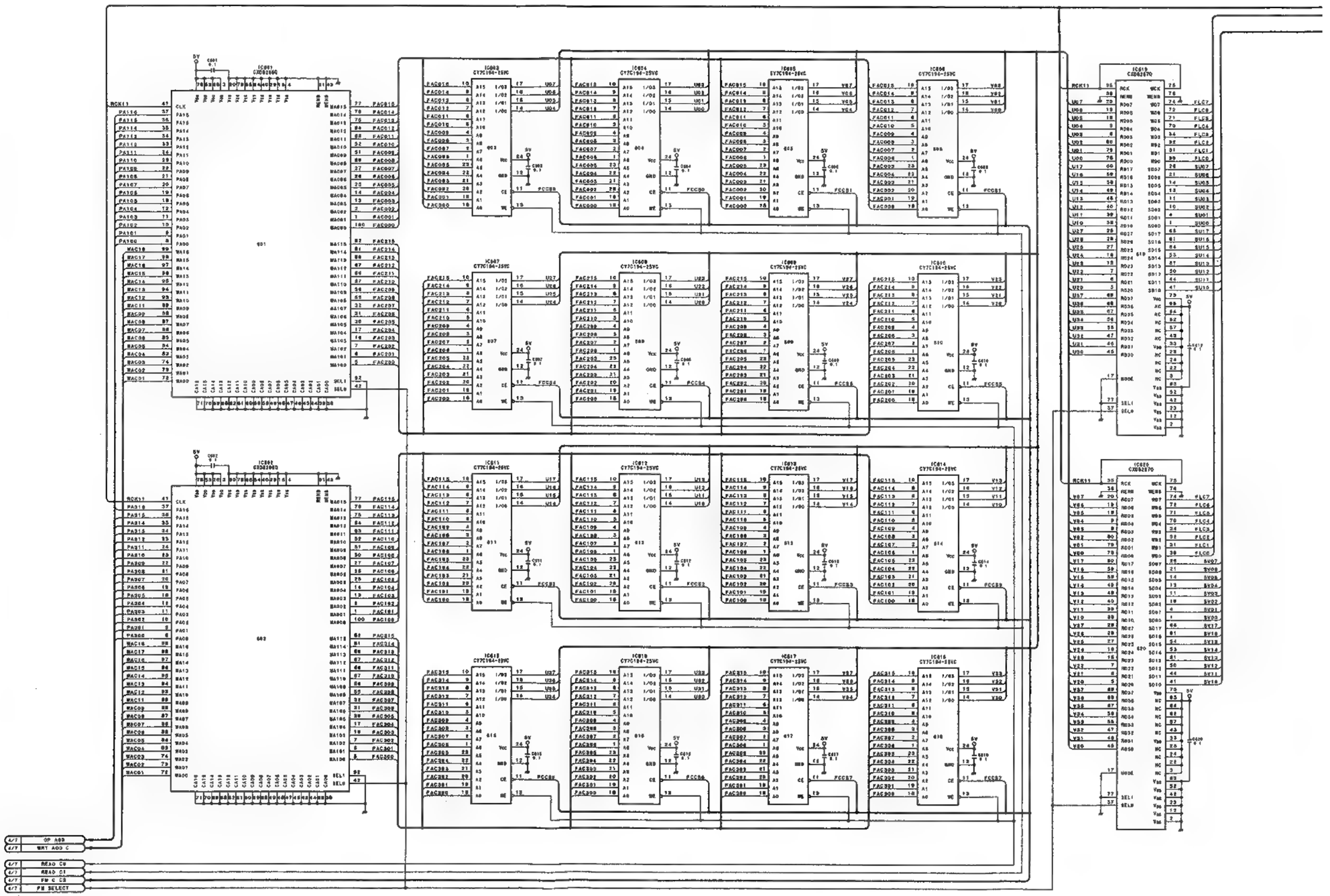

ESBK-7023

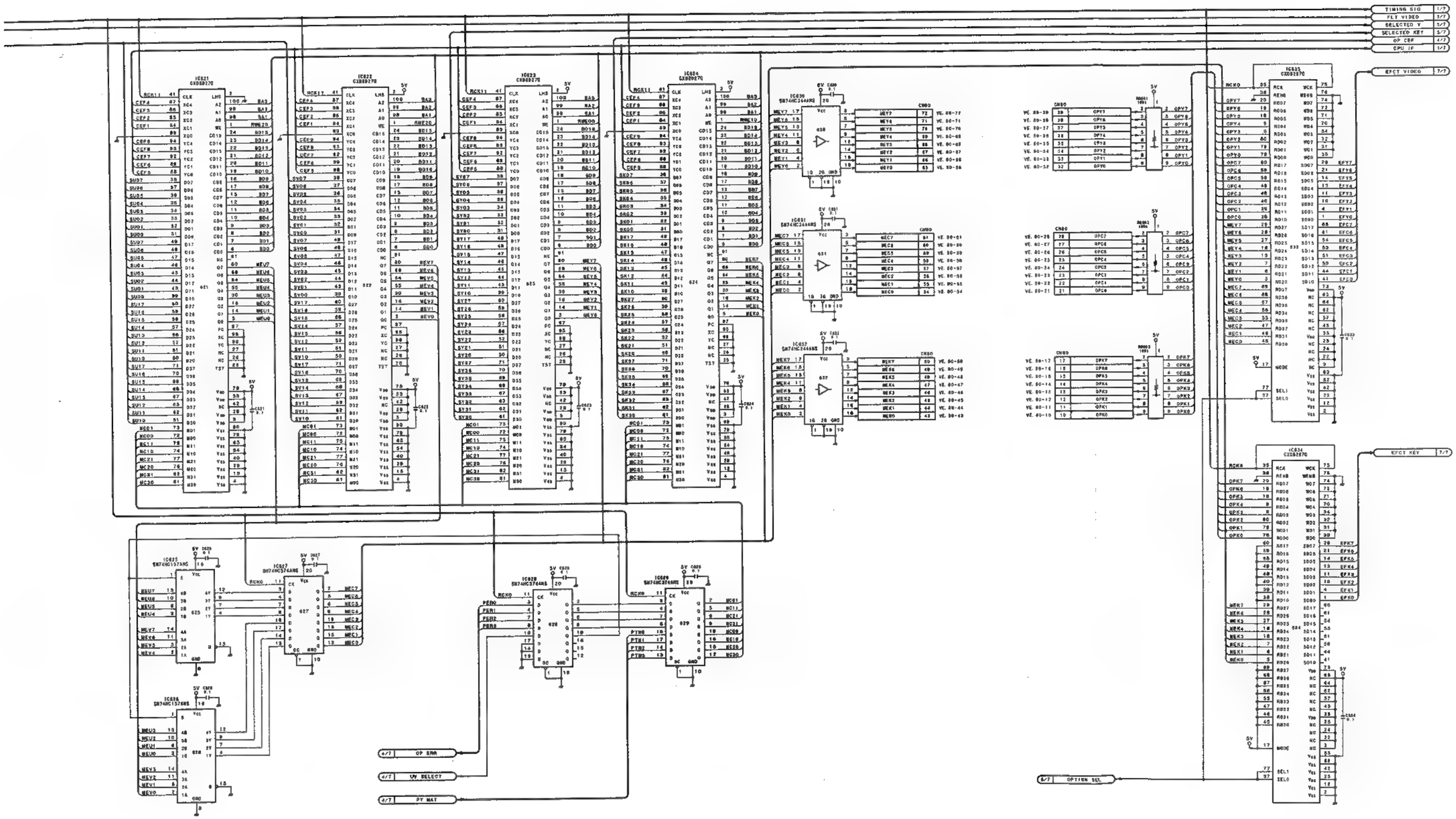

MY-75 (6/7)
PART NO 1-661-353-12
MODEL ESBK-7023
8-ESBK7023-MY75-11

M/E

1

2

3

4

5

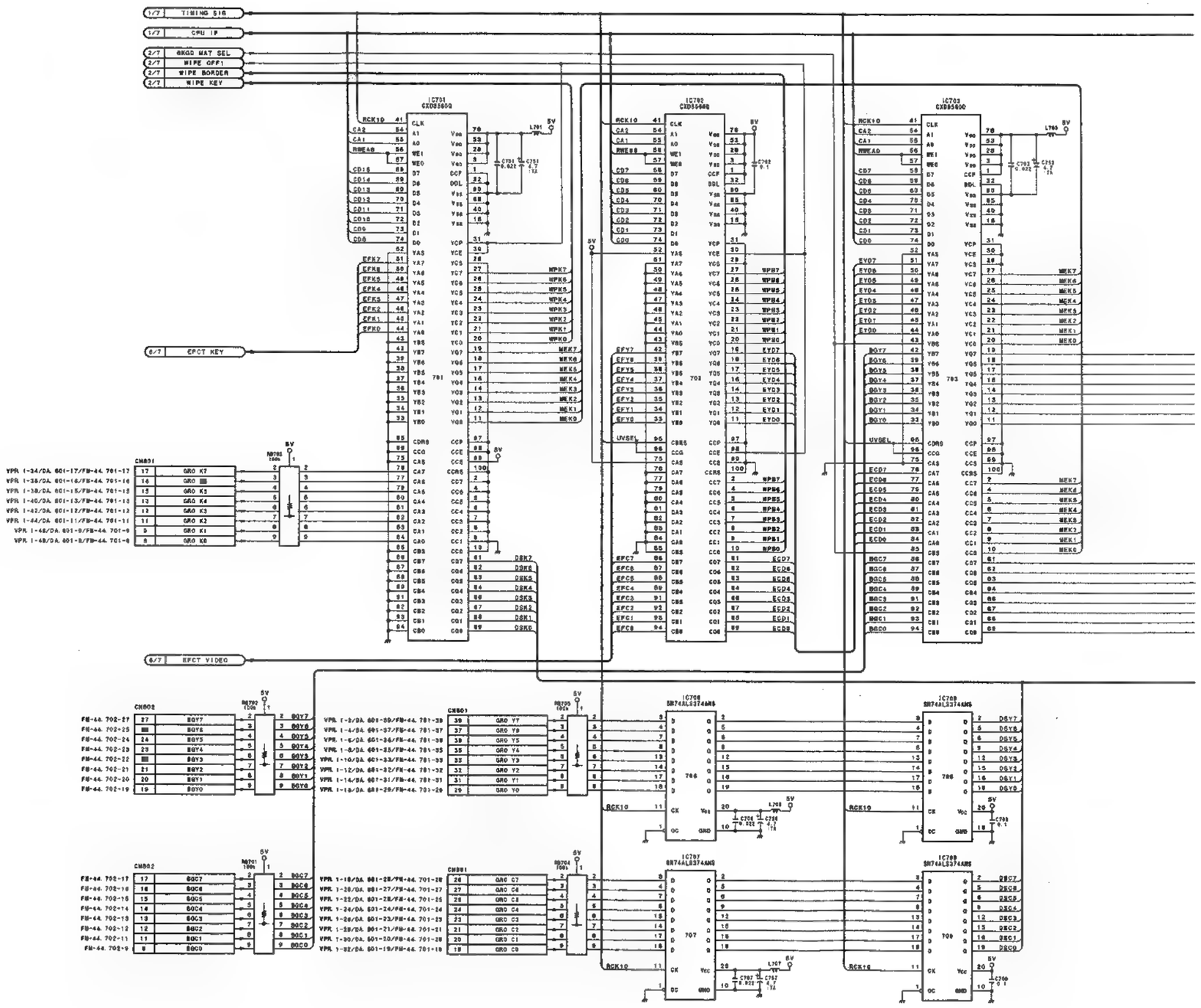

ESBK-7023

A B C D E F G H

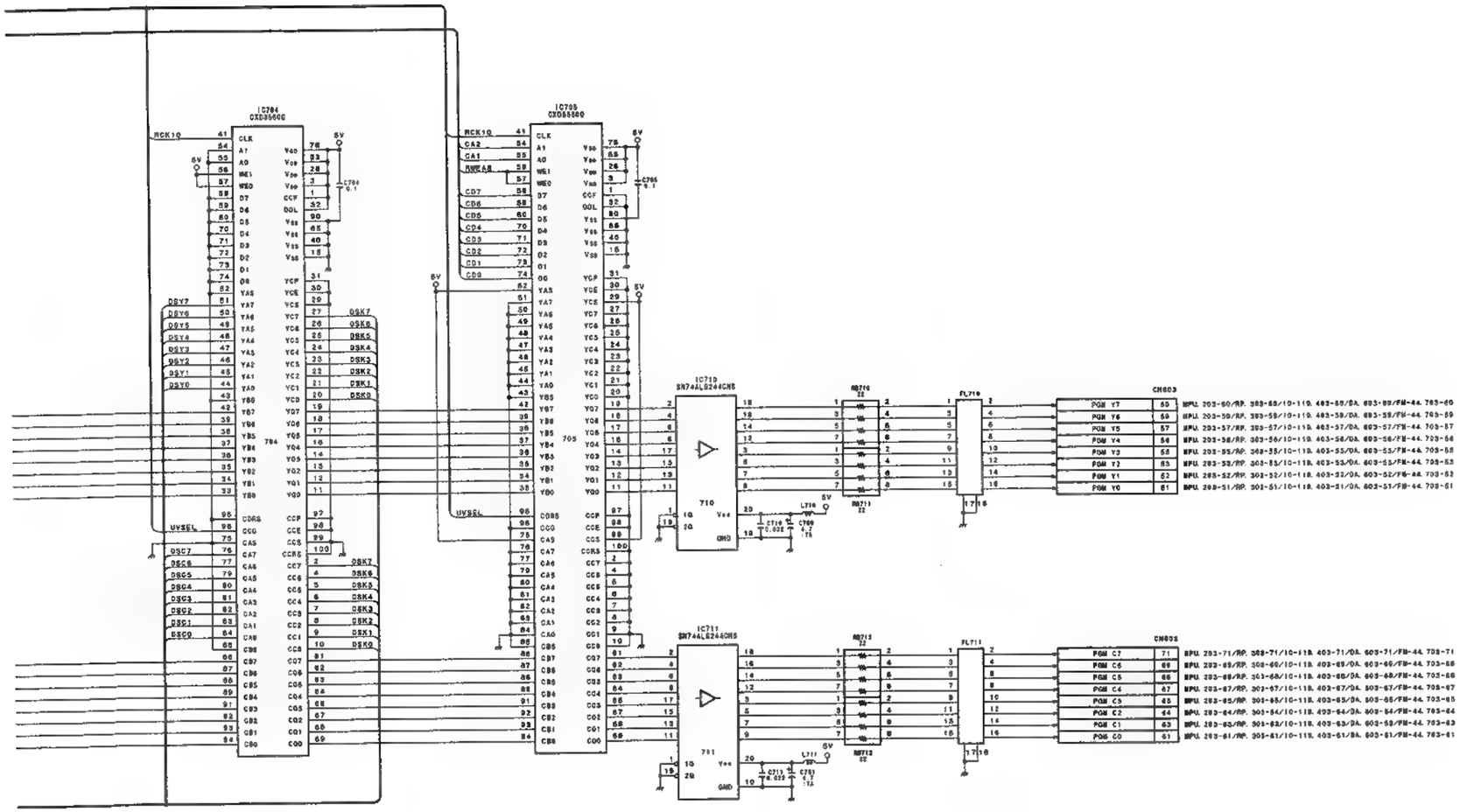

MY-75 (7/7)

PART NO 1-661-353-12
MODEL ESBK-7023
B-ESBK7023-MY75-11

ADDRESS GEN 1

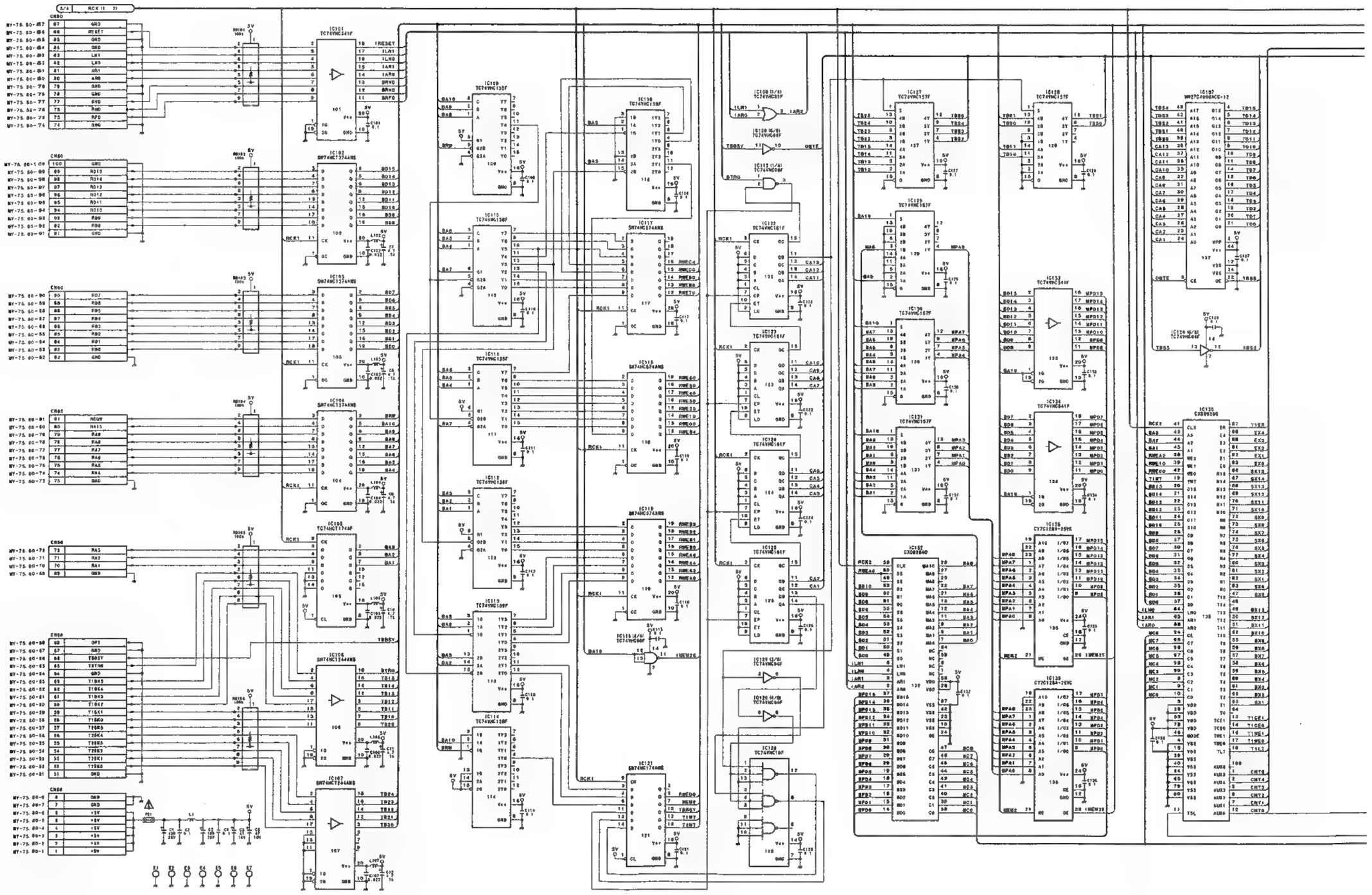

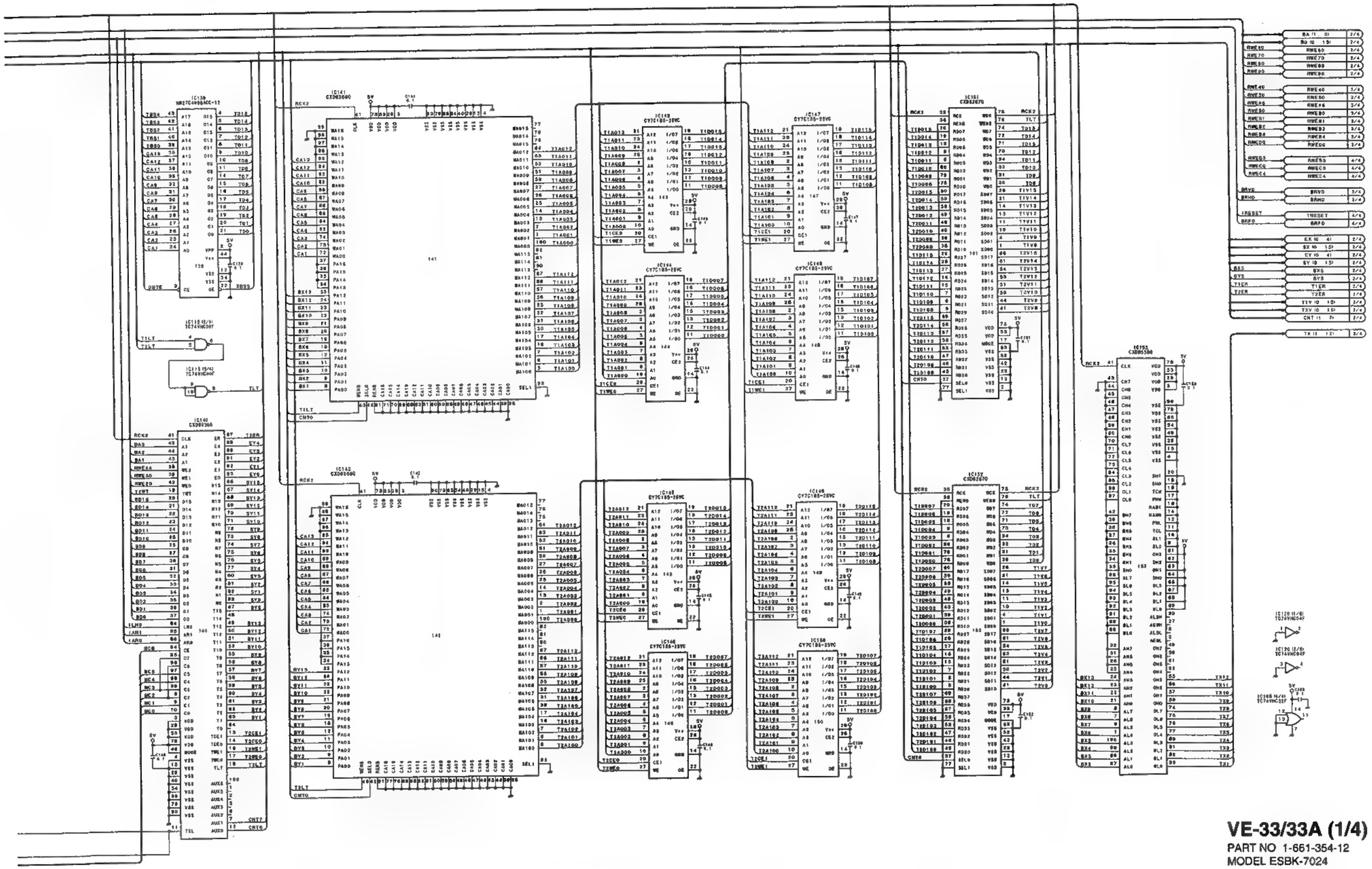

VE-33/33A (1/4)
PART NO 1-661-354-12
MODEL ESBK-7024
B-ESBK7024-VE33-11

ADDRESS GEN 2

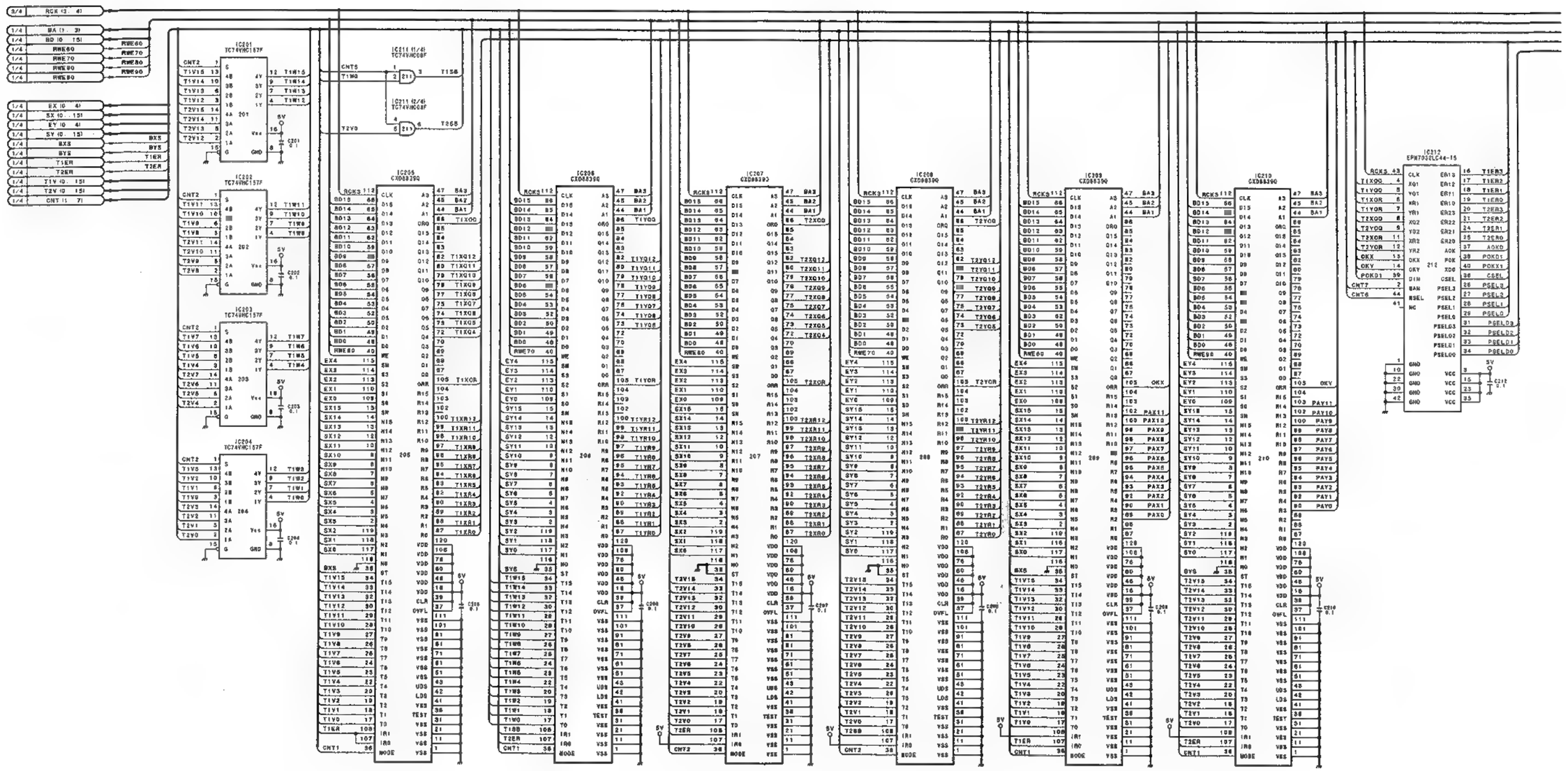

ESBK-7024

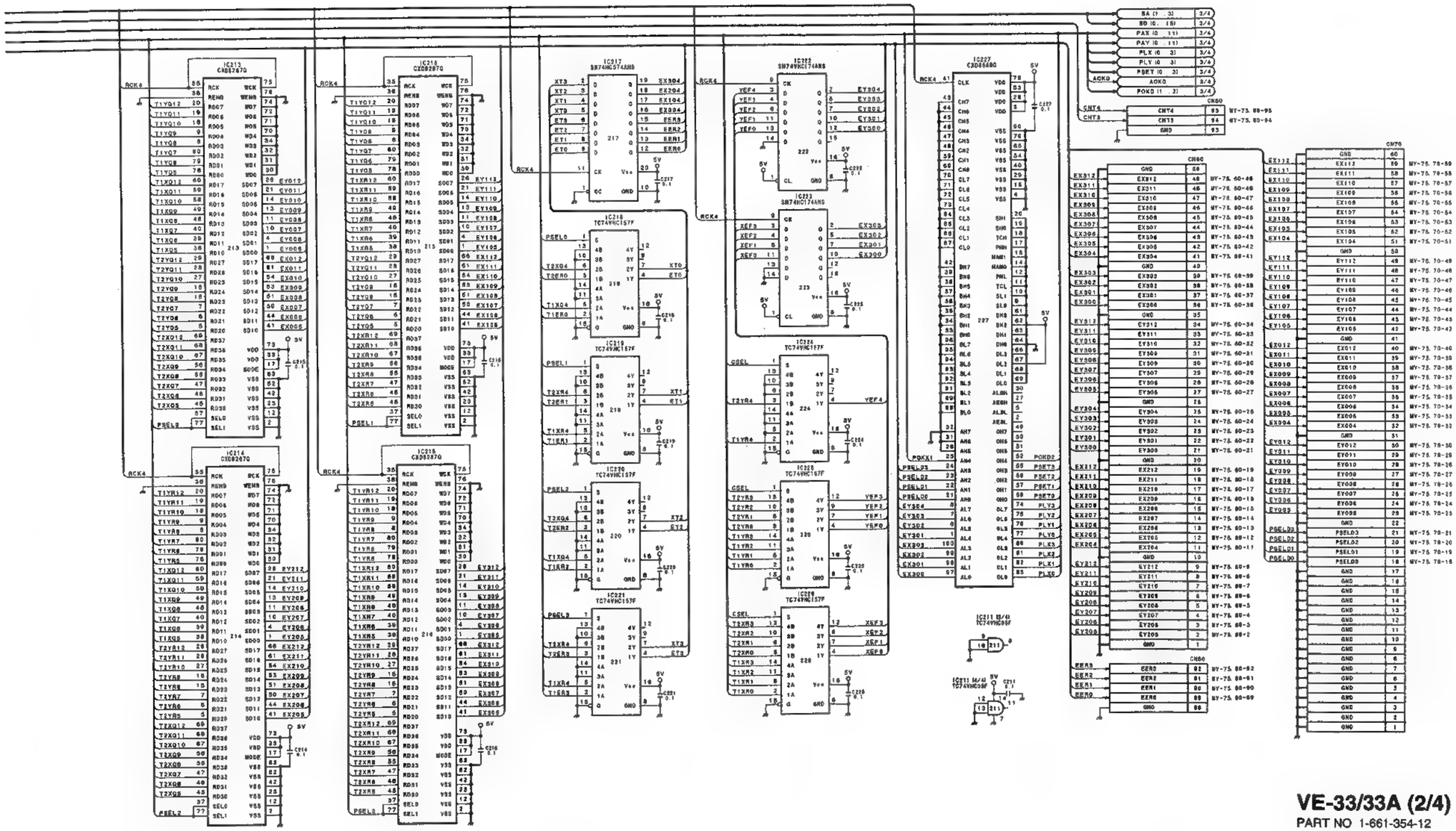

VE-33/33A (2/4)
PART NO 1-661-354-12
MODEL ESBK-7024
B-ESBK7024-VE33-11

LIGHTING

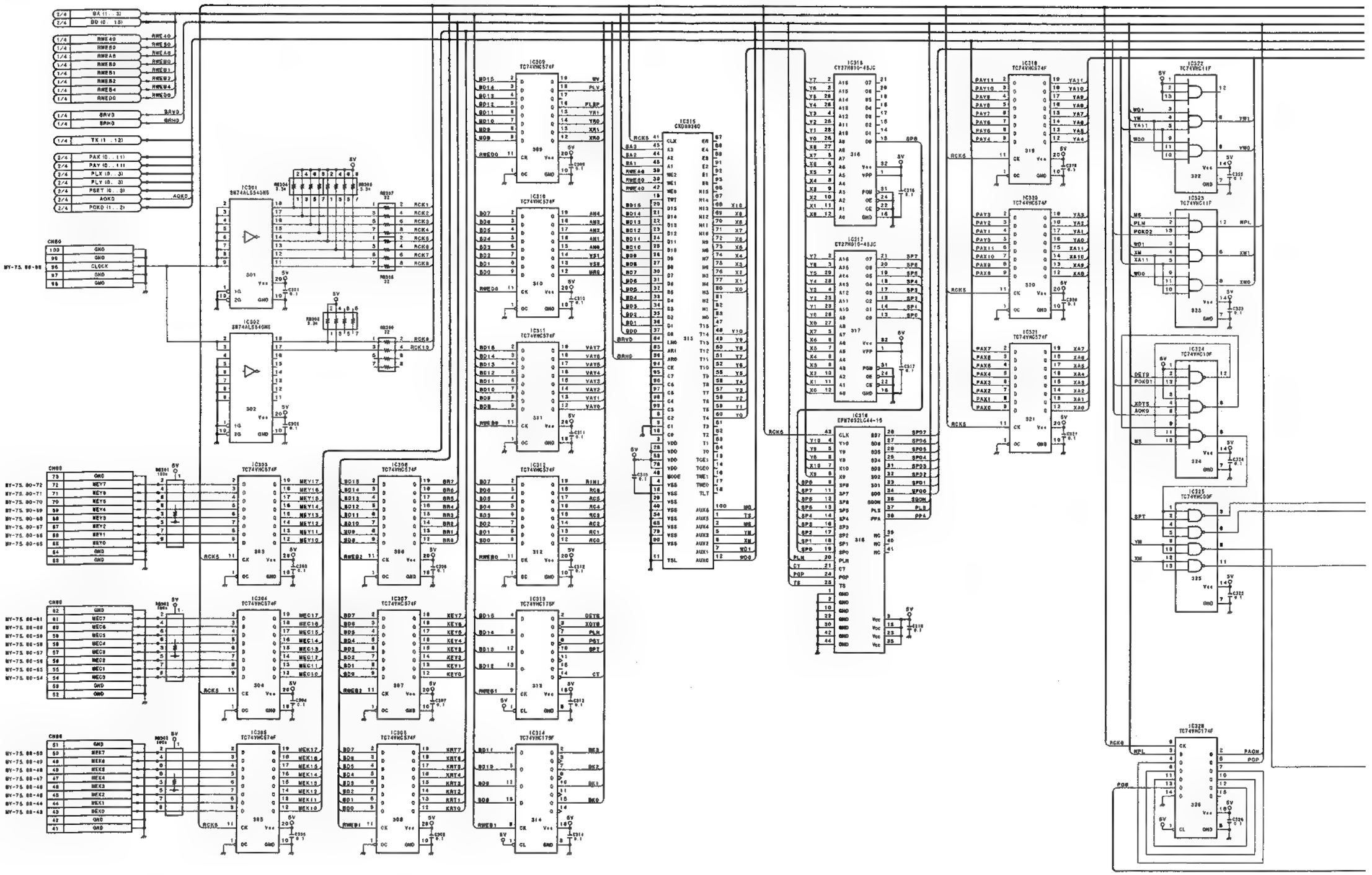

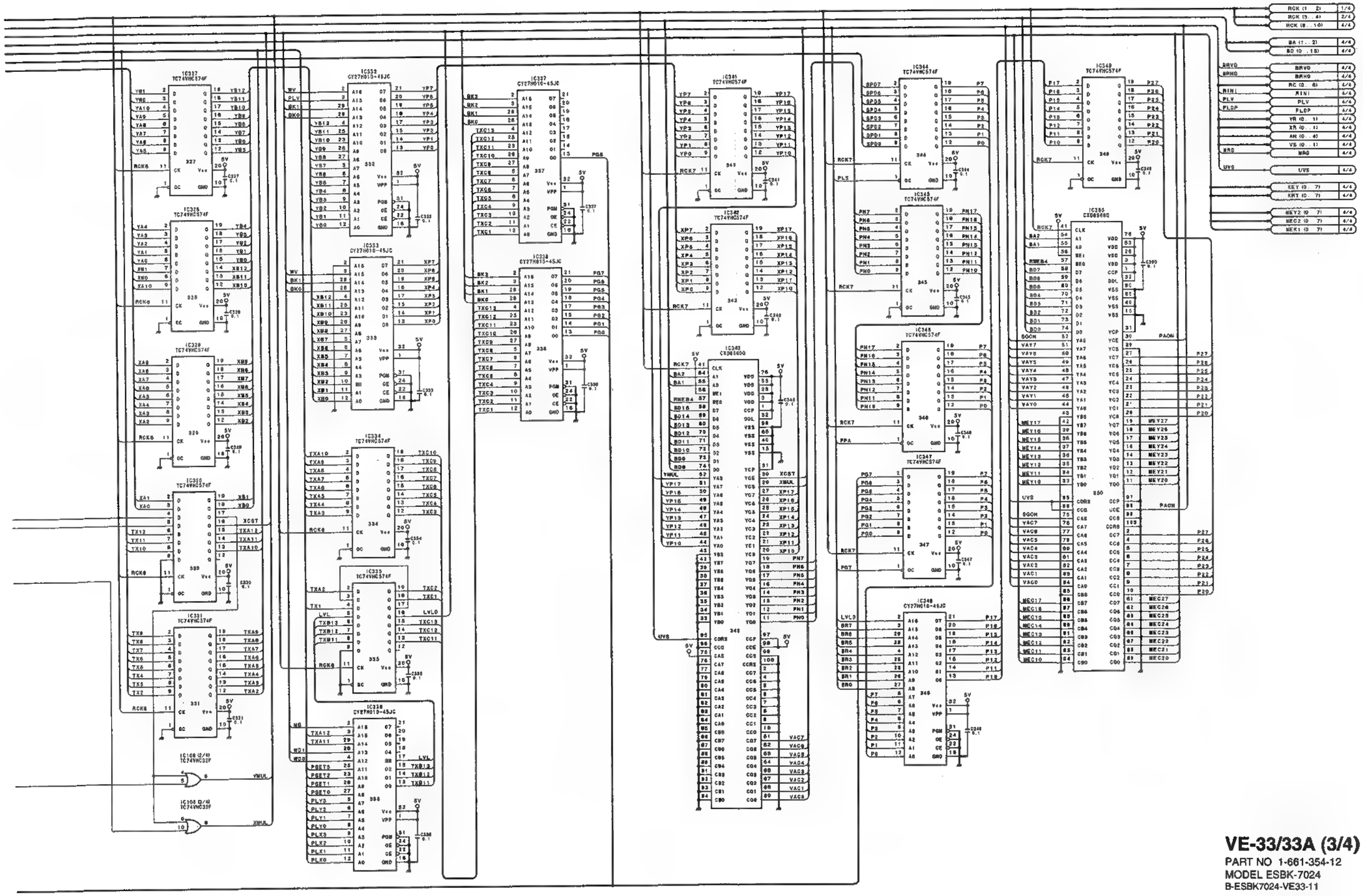

VE-33/33A (3/4)
PART NO 1-661-354-12
MODEL ESBK-7024
B-ESBK7024-VE33-11

TRAIL

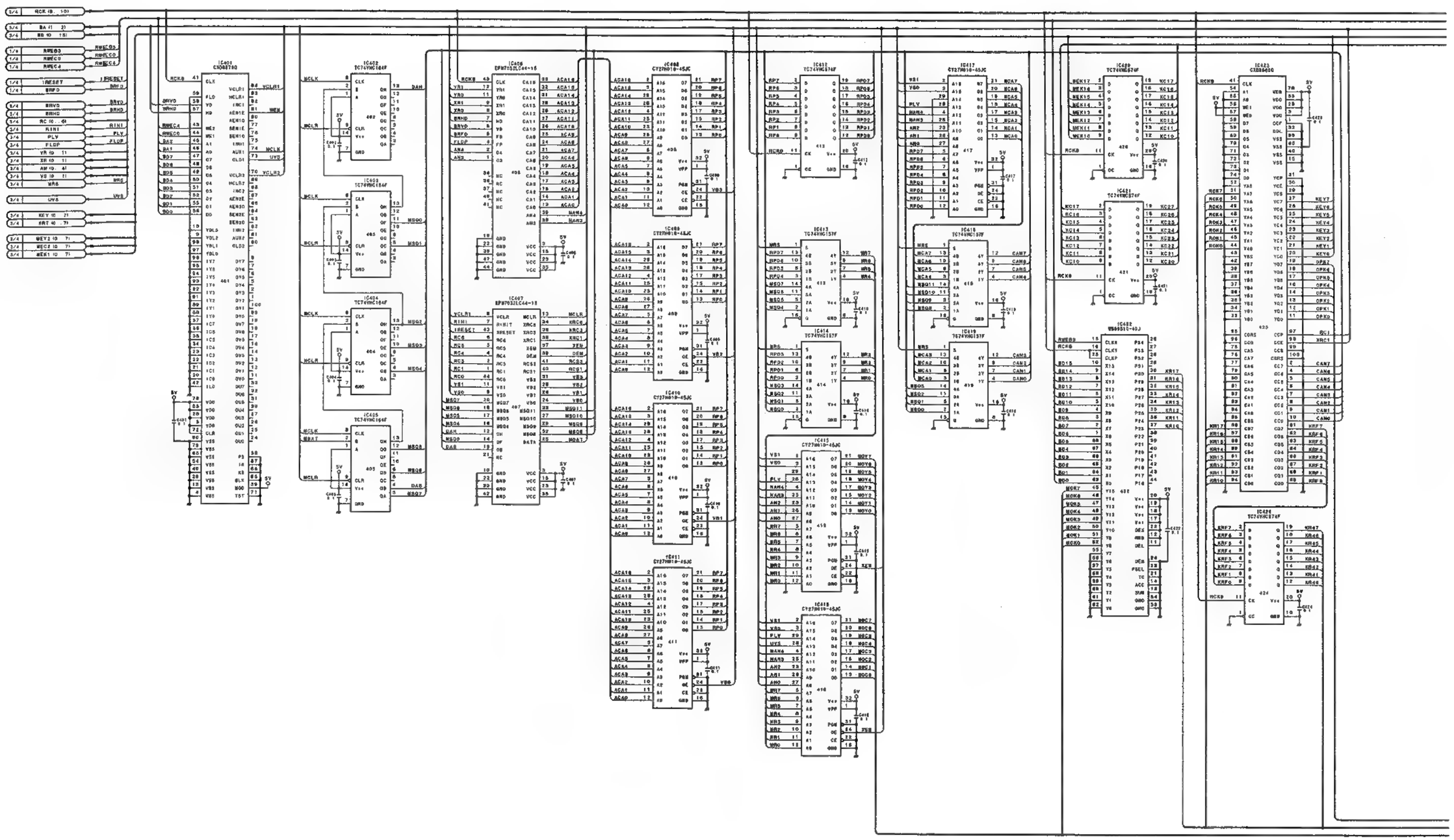

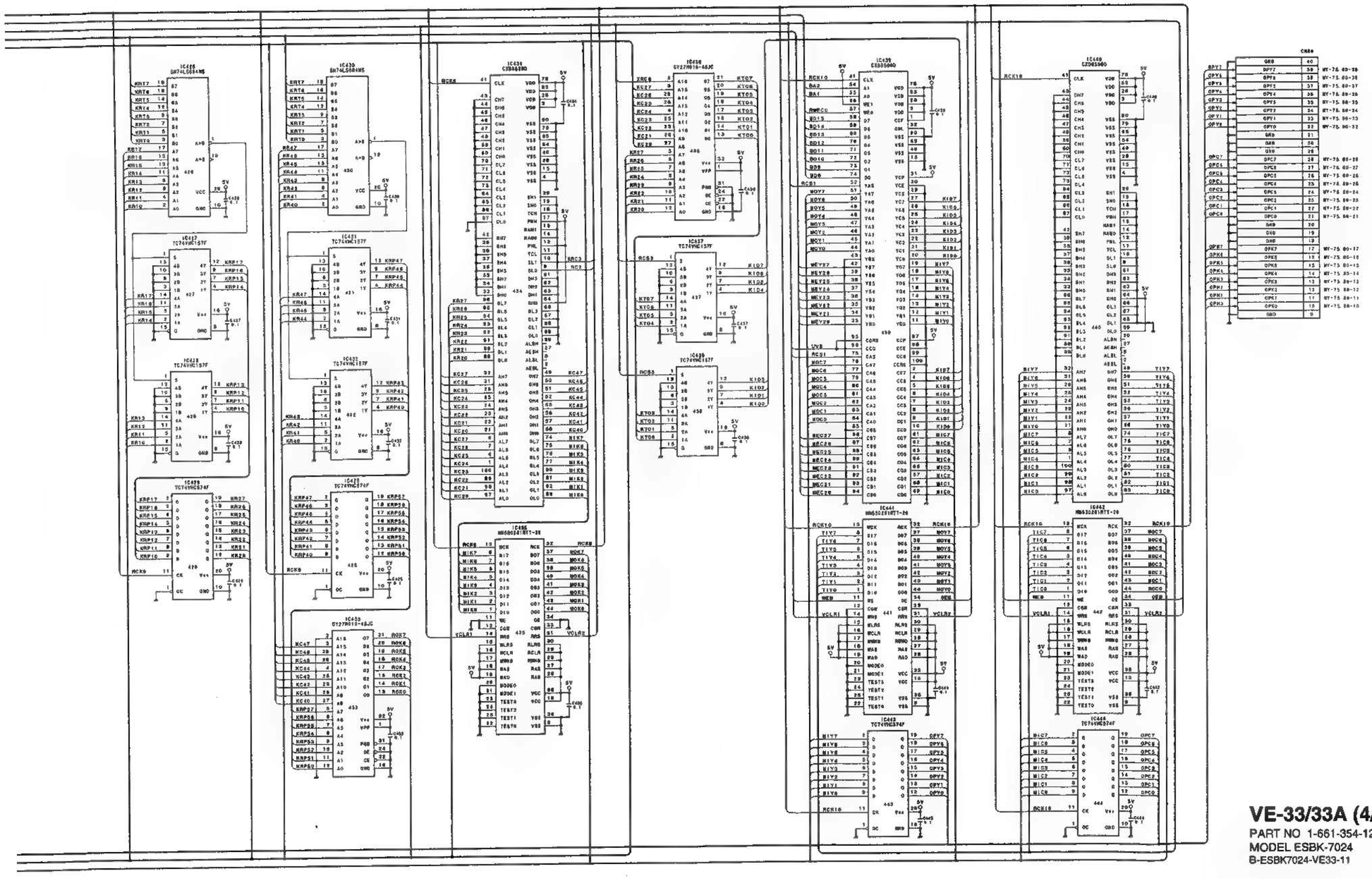

VE-33/33A (4/4)
PART NO 1-661-354-12
MODEL ESBK-7024
B-ESBK7024-VE33-11

DAC-2O/20A (1/2)

① TP1O0 NTSC

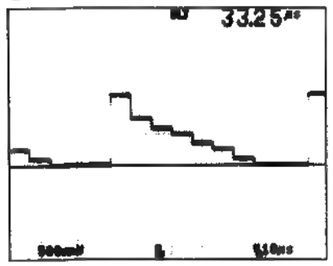

③ TP102 NTSC

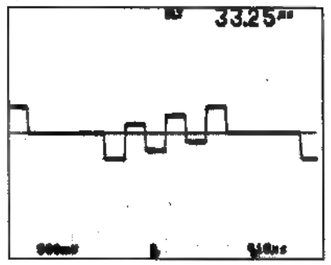

② TP201 NTSC

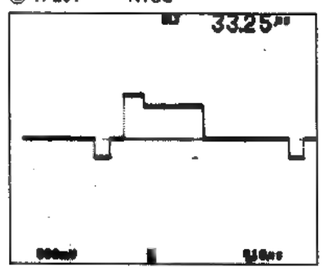

④ TP204/206 NTSC

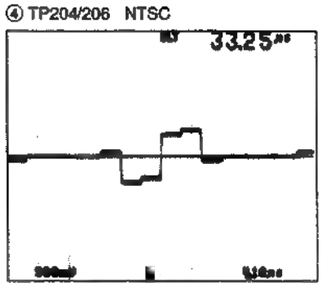

① TP1O0 PAL

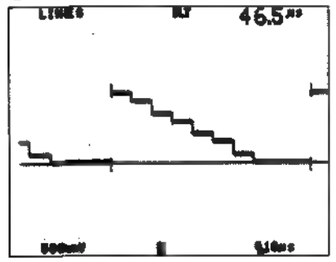

③ TP102 PAL

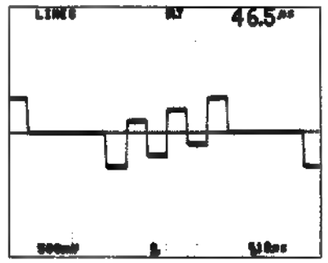

② TP201 PAL

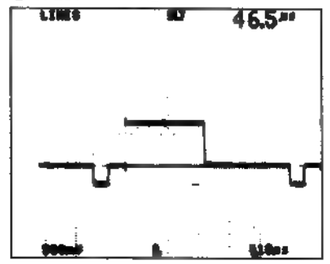

④ TP204/206 PAL

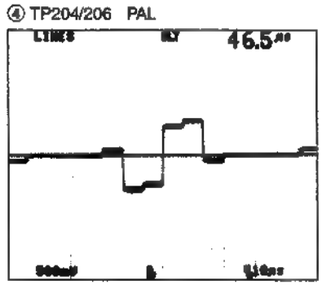

DAC-20/20A (2/2)

② TP101 NTSC

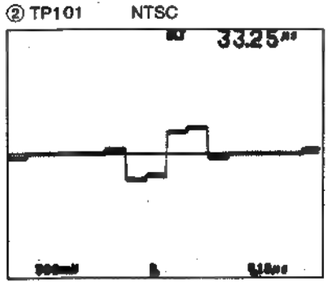

① TP200 NTSC

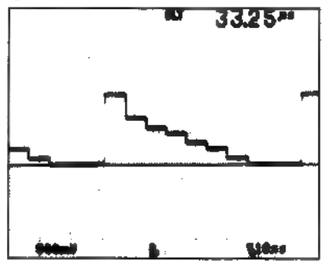

③ TP202/203 NTSC

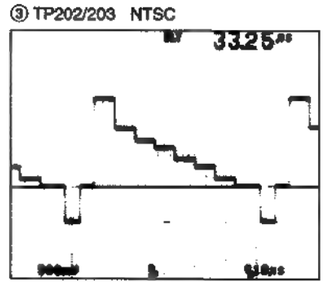

⑤ TP205 NTSC

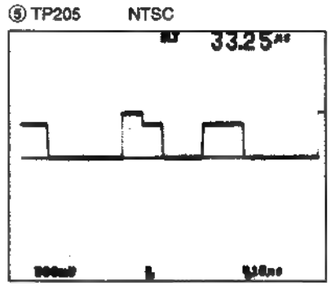

② TP101 PAL

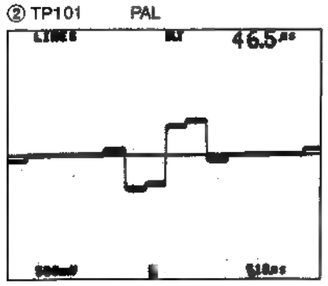

① TP200 PAL

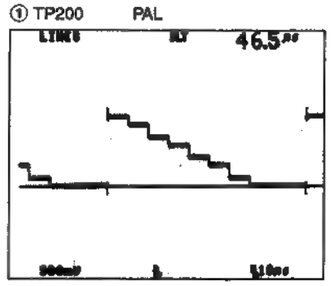

③ TP202/203 PAL

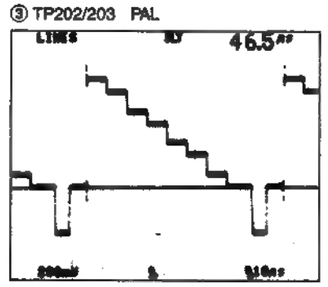

⑤ TP205 PAL

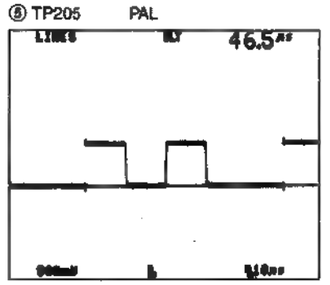

⑥ TP207/208 NTSC

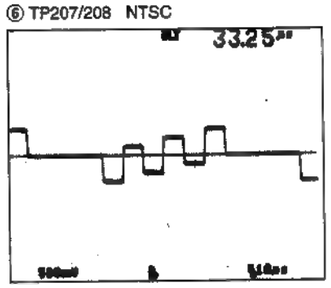

⑥ TP207/208 PAL

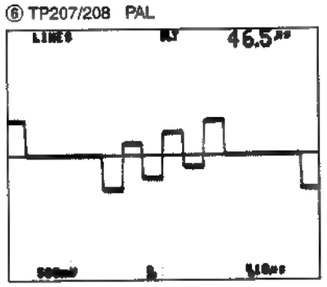

⑦ TP209 NTSC

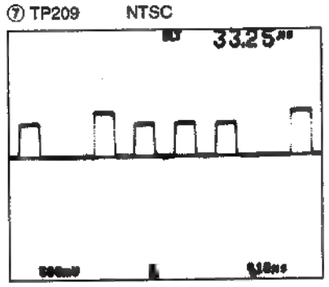

⑦ TP209 PAL

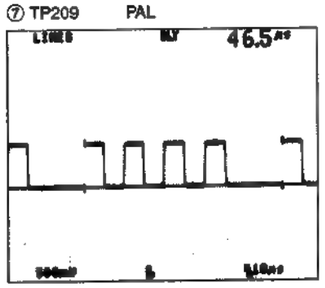

D/A CONVERT

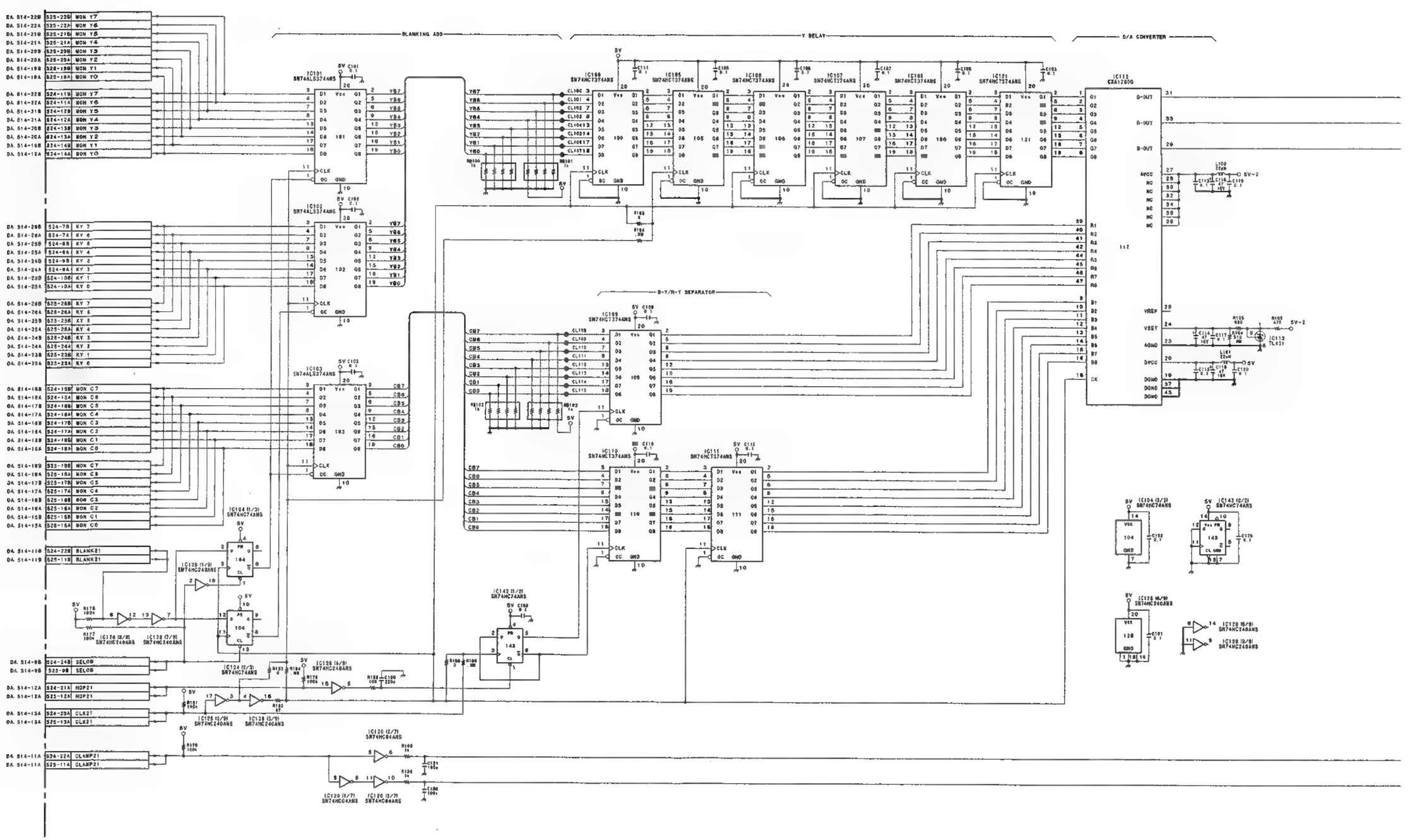
BLANKING ADD
Y DELAY
D/A CONVERTER
B-Y/R-Y SEPARATOR
IC112 CXA1230Q
IC113 TL431
SN74ALS374ANS
SN74HCT374ANS
SN74HC74ANS
SN74HC240ANS
SN74HC04ANS
SN74HC86ANS

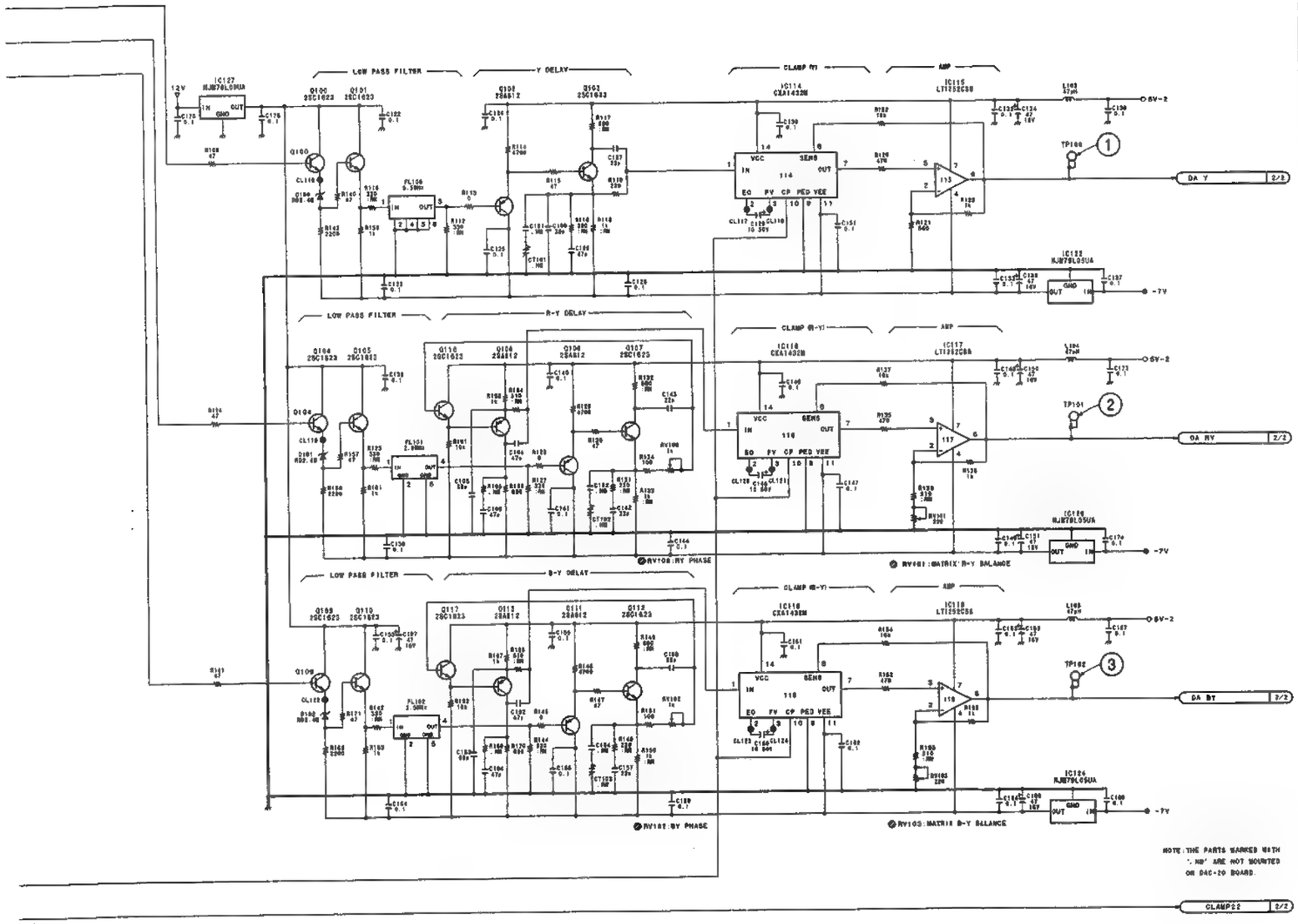

DAC-20/20A (1/2)
PART NO 1-661-119-12
MODEL ESBK-7025/7071
B-ESBK7071-DAC20-12

RGB MATRIX

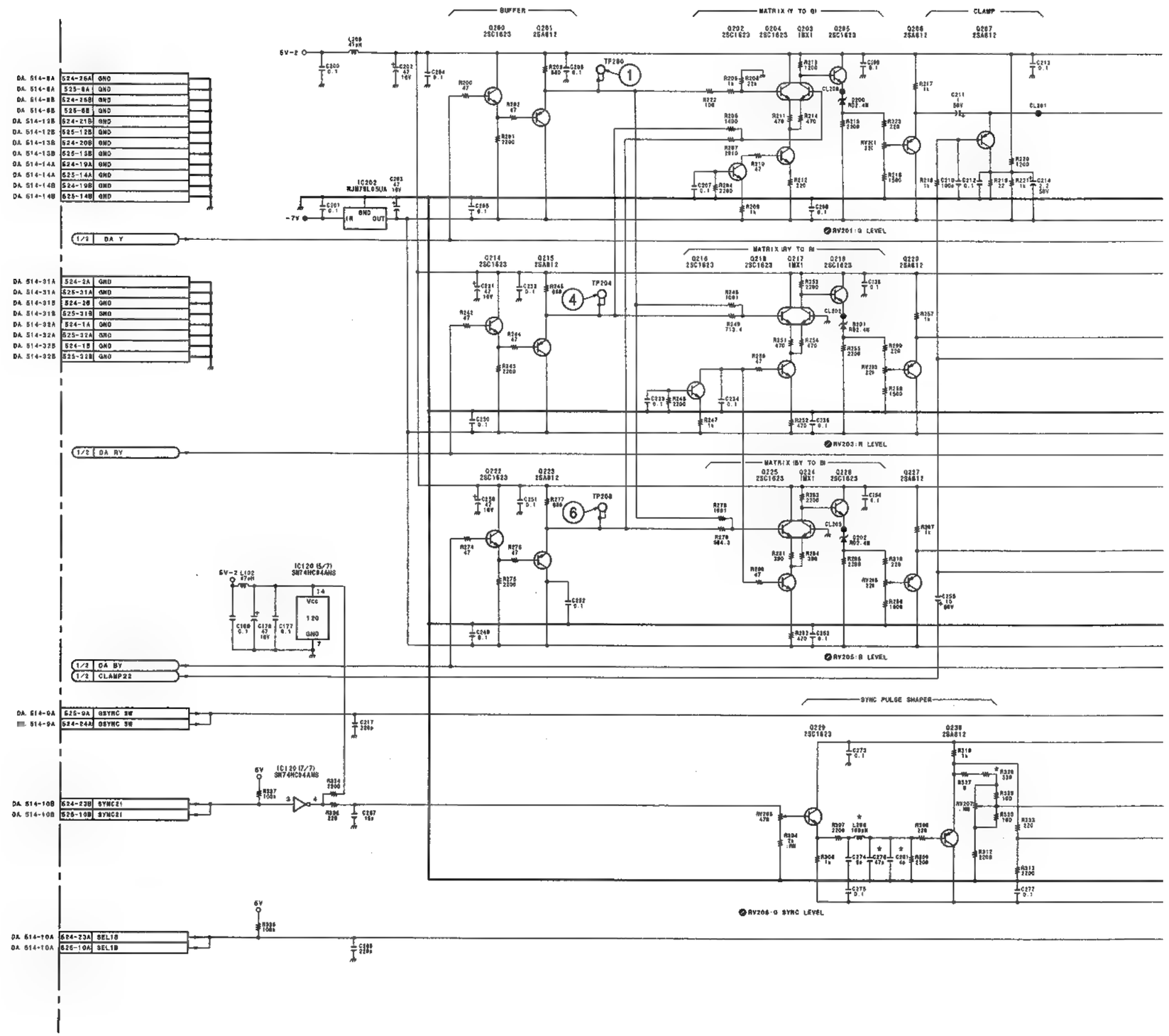

ESBK-7025/7071

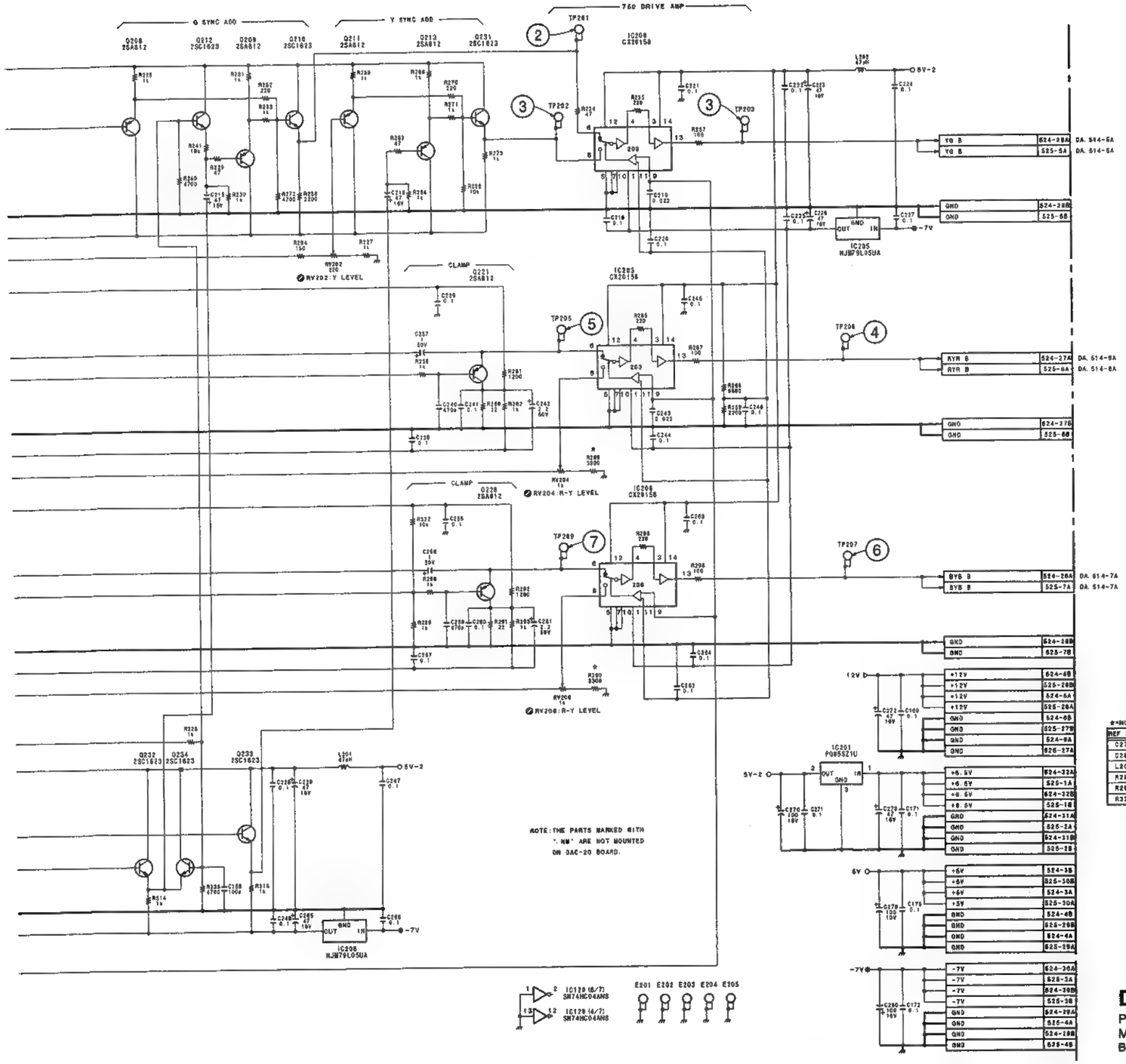

*=NOTE

REF NO.	NTSC	PAL
C276	47P	100P
C281	4P	3P
L206	180UH	180UH
R259	3300	680
R290	3300	680
R328	330	180

DAC-20/20A (2/2)
PART NO 1-661-119-12
MODEL ESBK-7025/7071
B-ESBK7071-DAC20-12

QSDI P1 IN DECODER

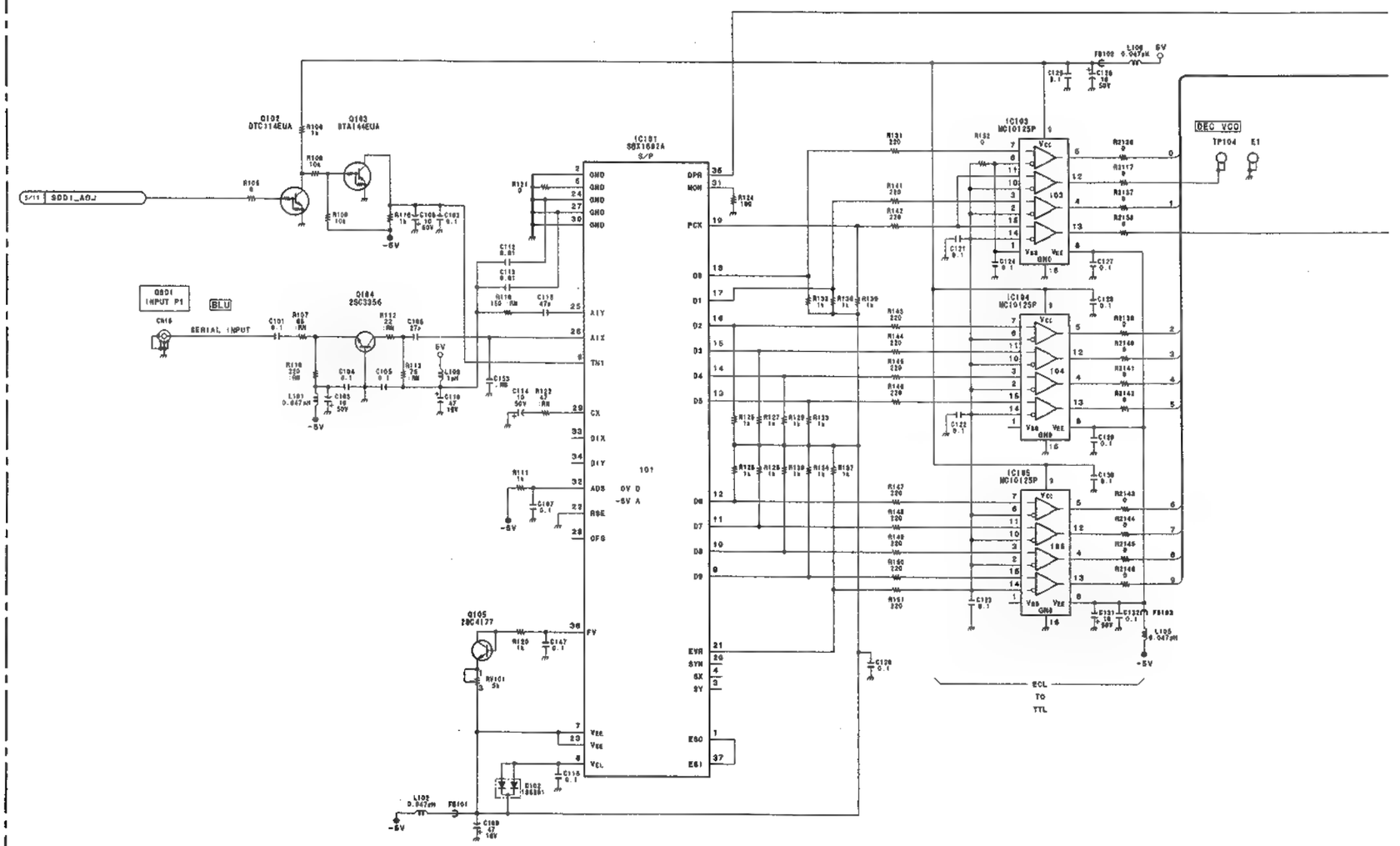

ESBK-7031

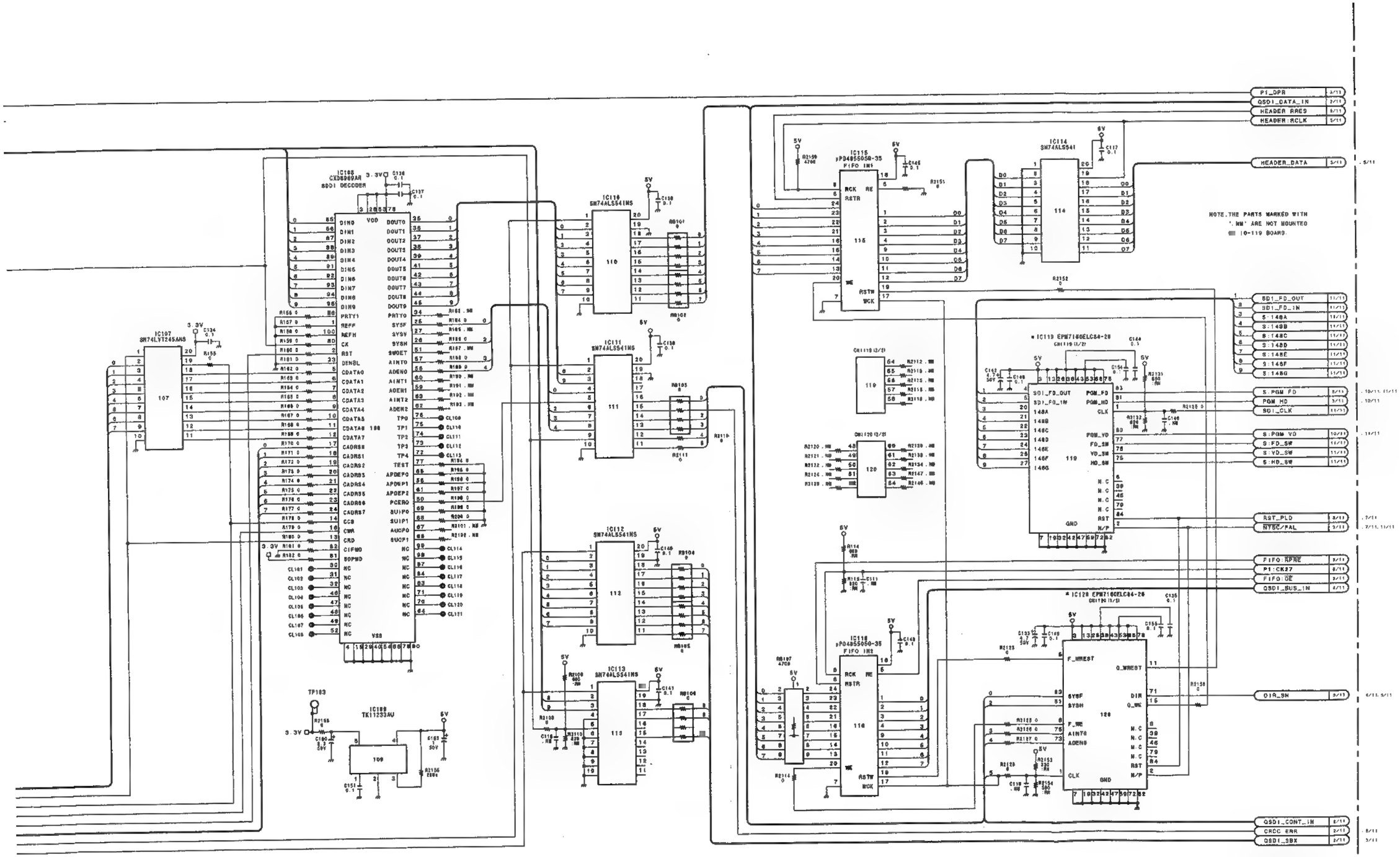

IO-119 (1/11)
PART NO 1-662-795-11
MODEL ESBK-7031
B-ESBK7031-IO119-11

QSDI P2 IN DECODER

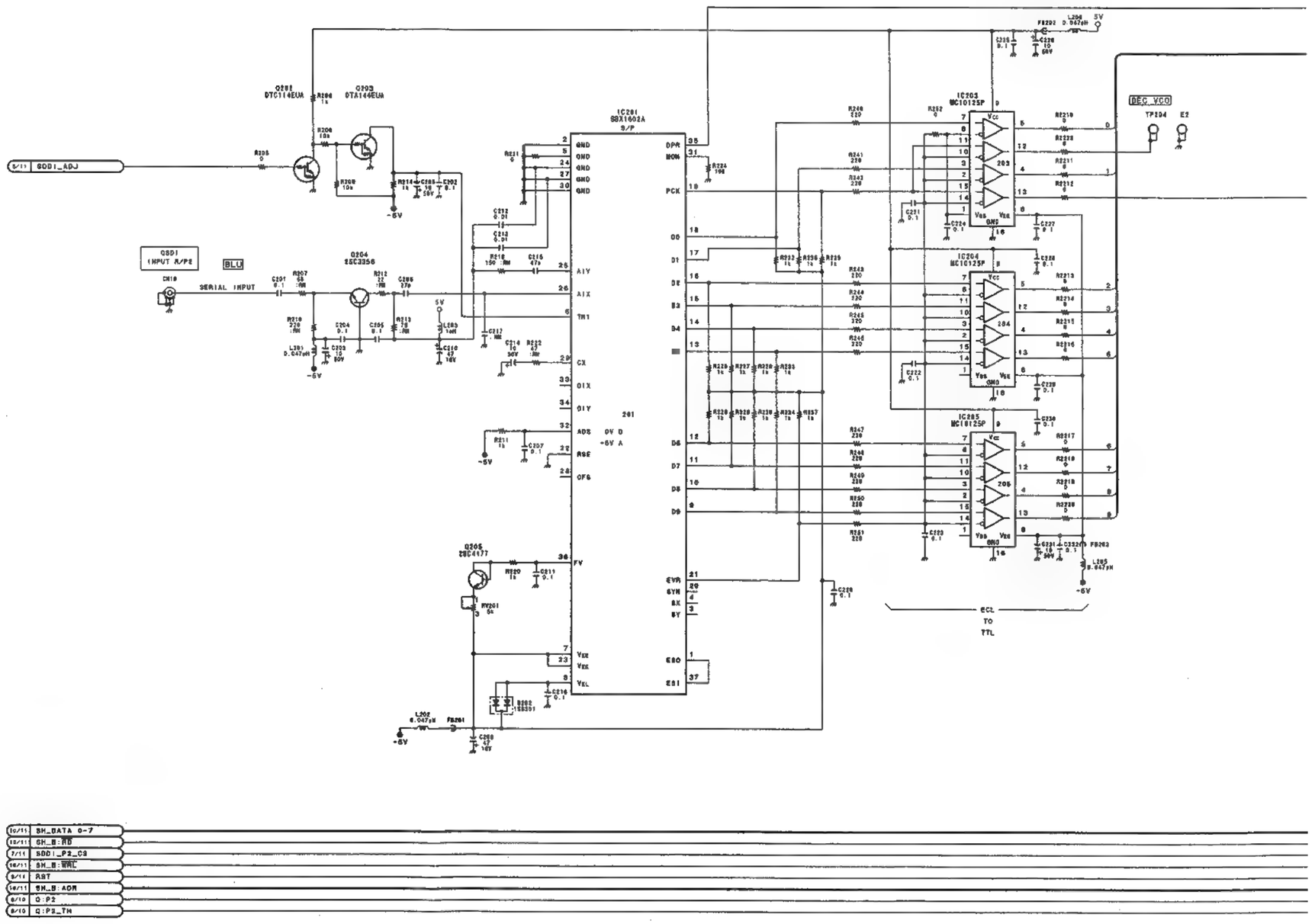

ESBK-7031

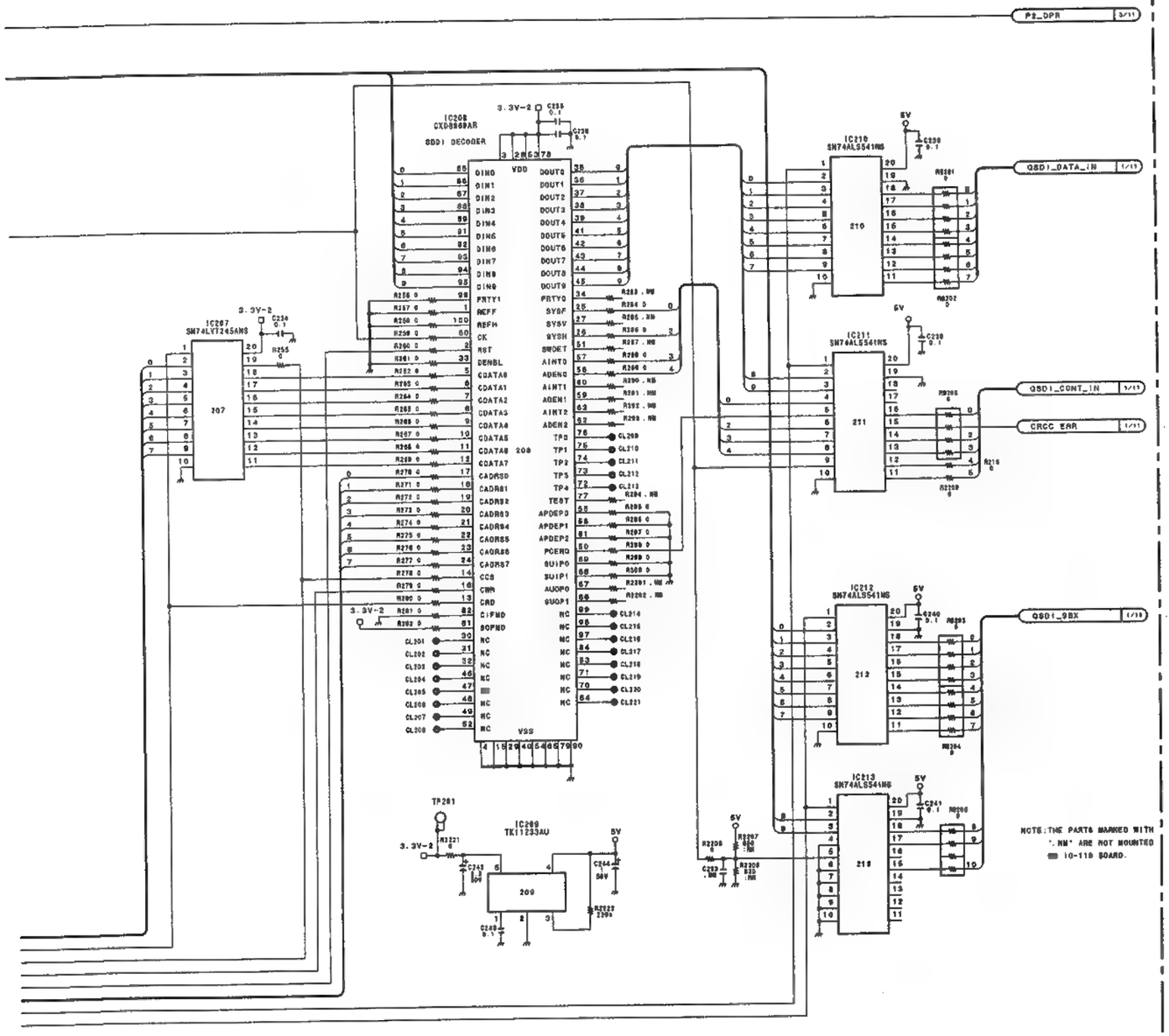

IO-119 (2/11)
PART NO 1-662-795-11
MODEL ESBK-7031
B-ESBK7031-IO119-11

QSDI PGMOUT ENCODER

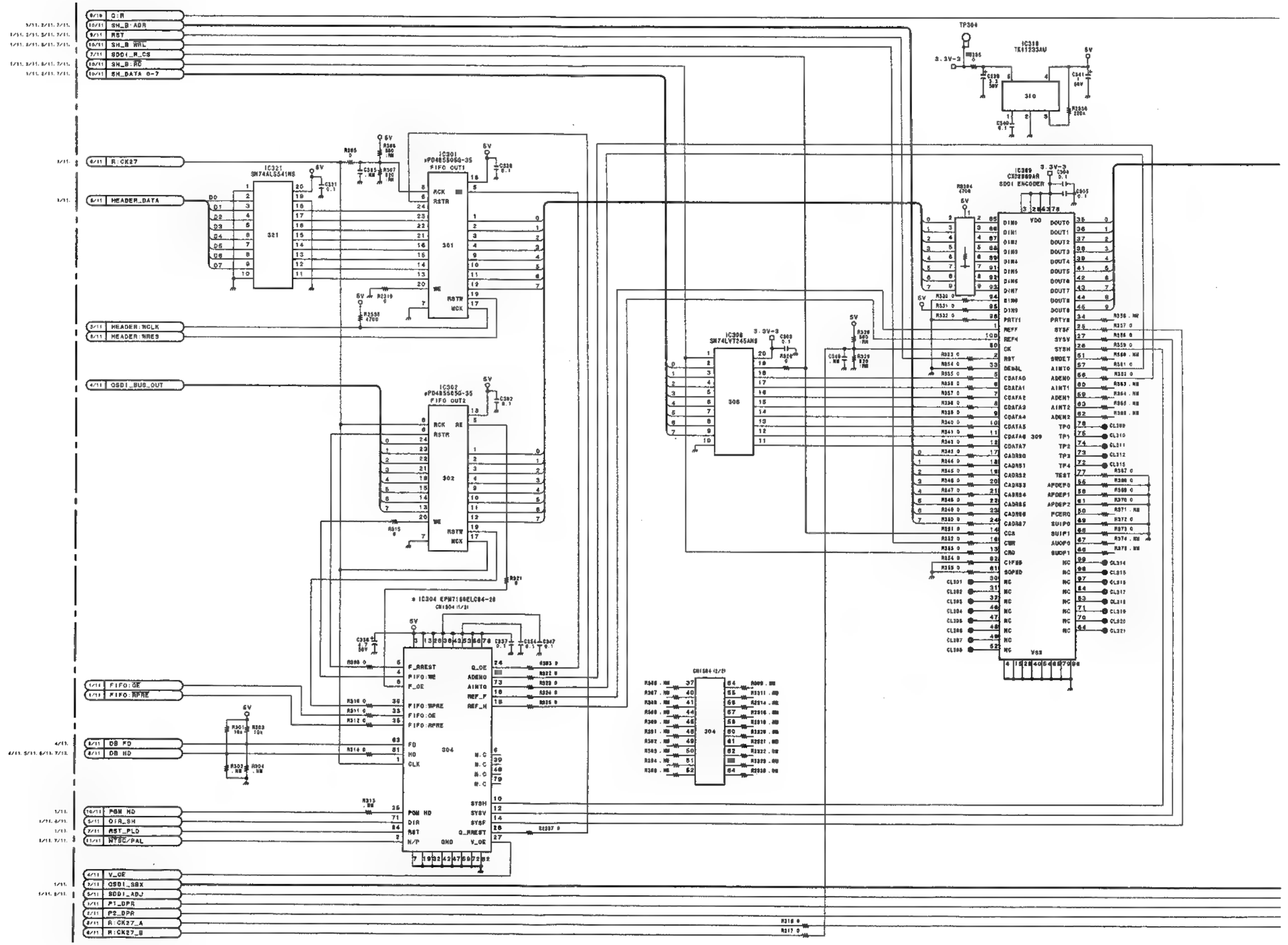

ESBK-7031

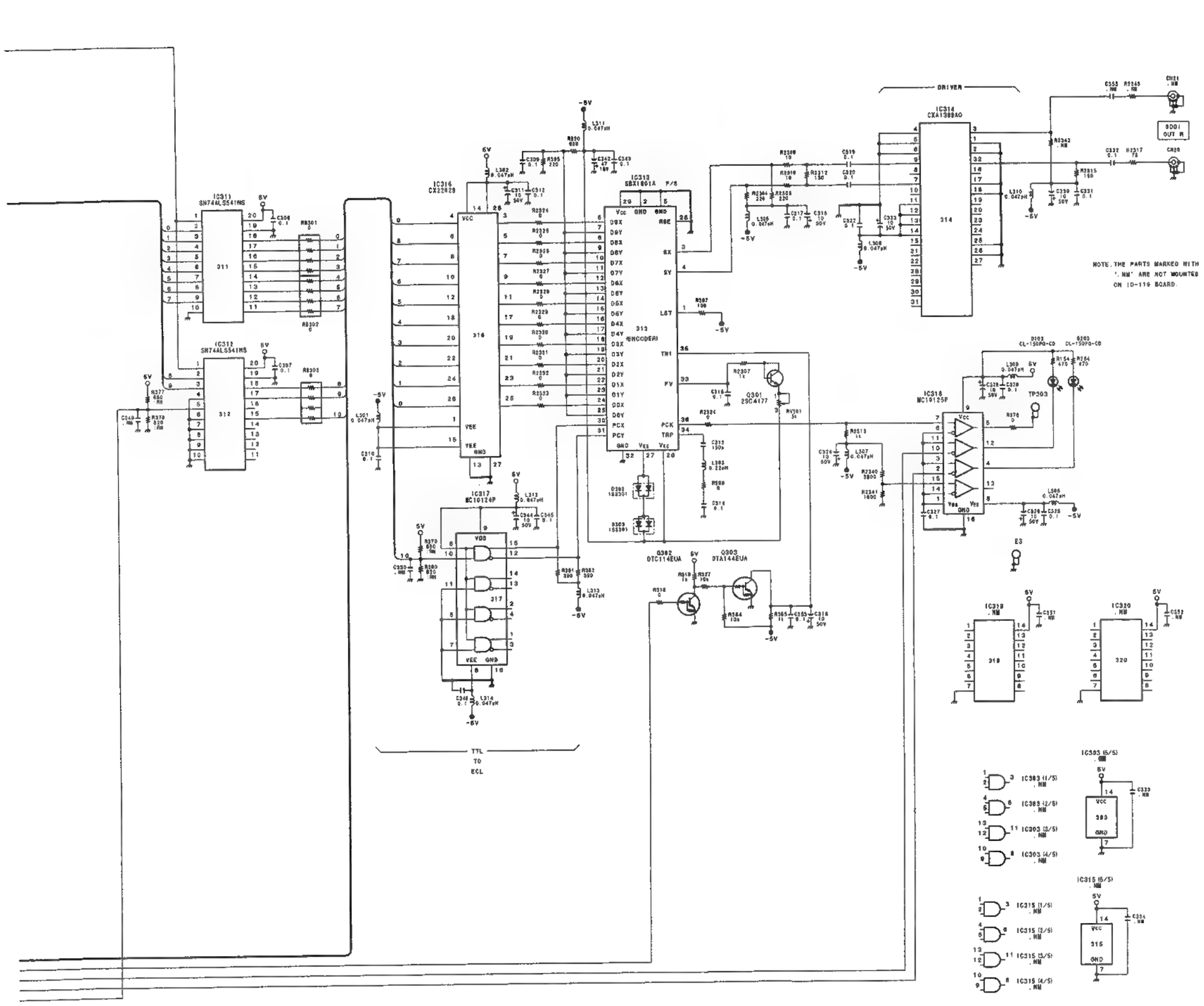

IO-119 (3/11)
PART NO 1-662-795-11
MODEL ESBK-7031
B-ESBK7031-IO119-11

DATA TIMING CONTROL

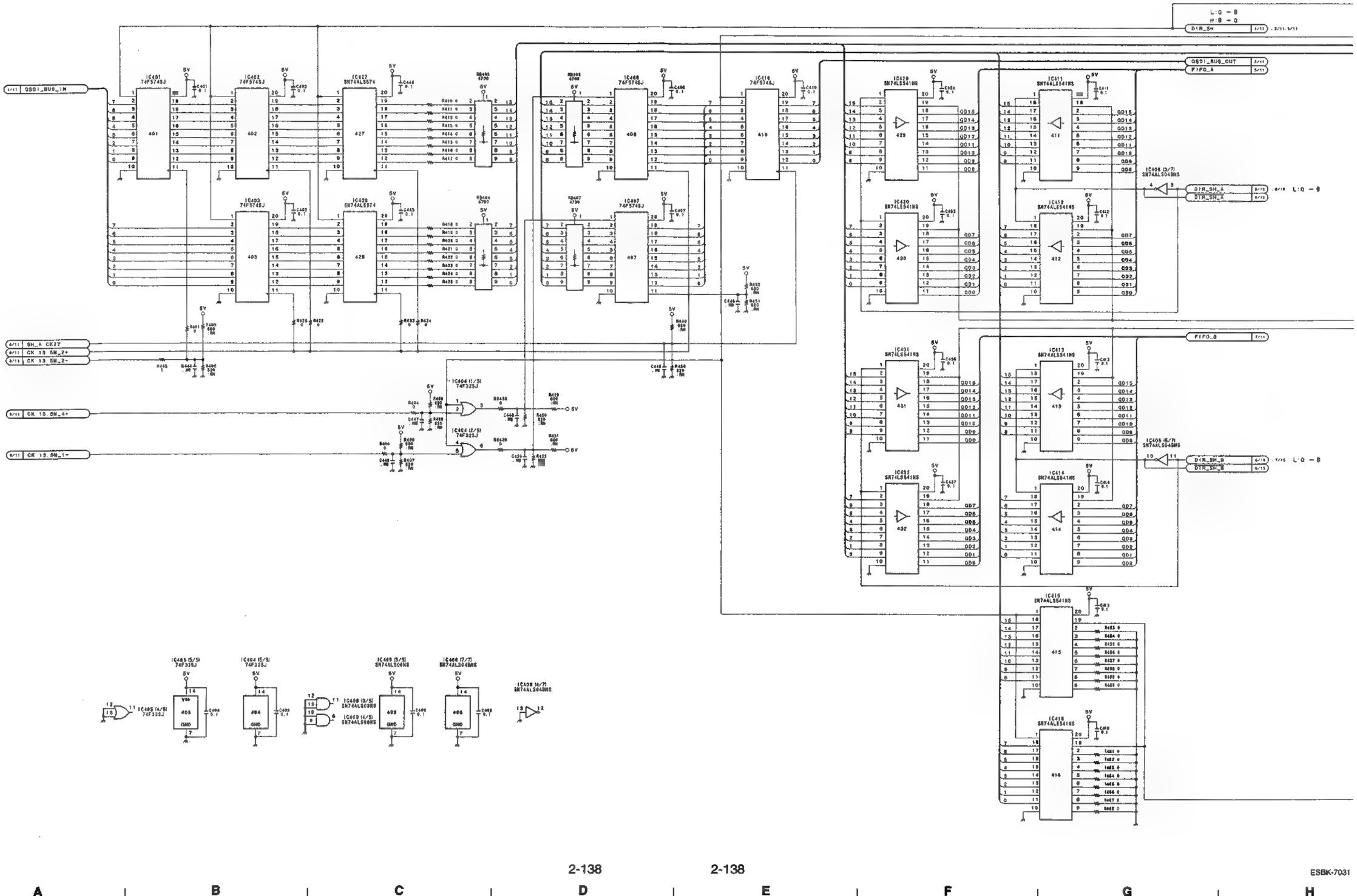

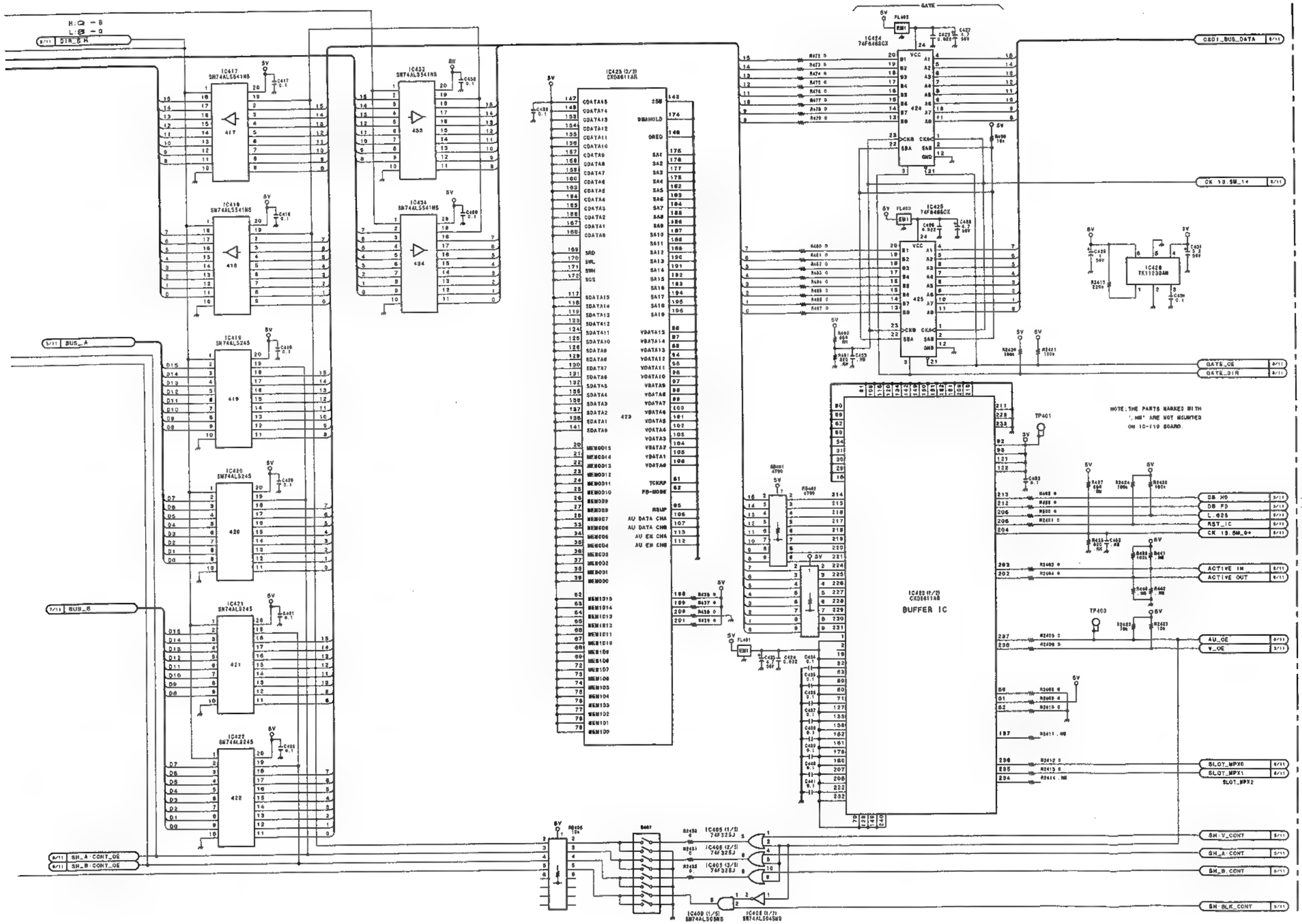

IO-119 (4/11)
PART NO 1-662-795-11
MODEL ESBK-7031
B-ESBK7031-IO119-11

AUDIO BLOCK A

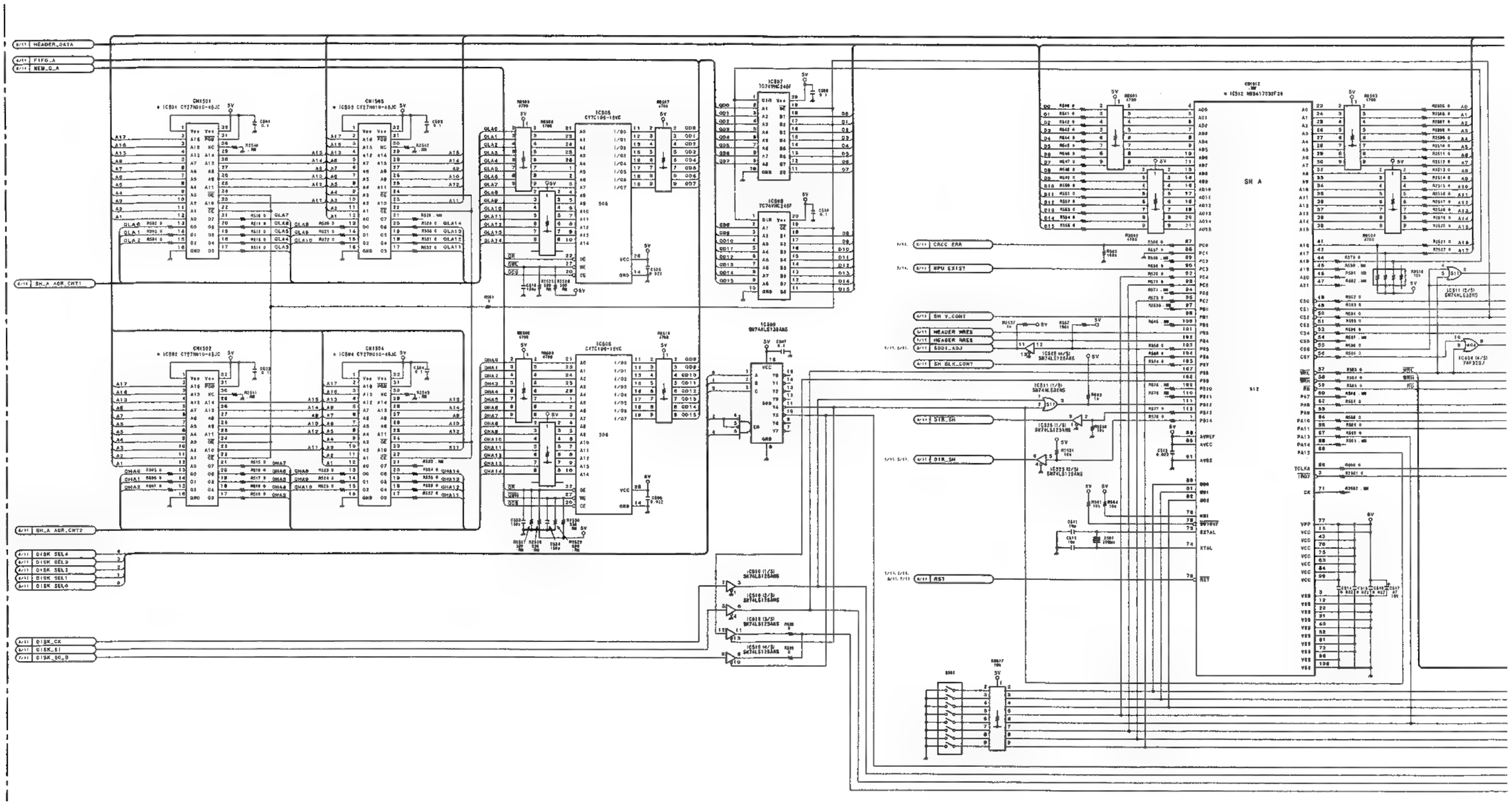

ESBK-7031

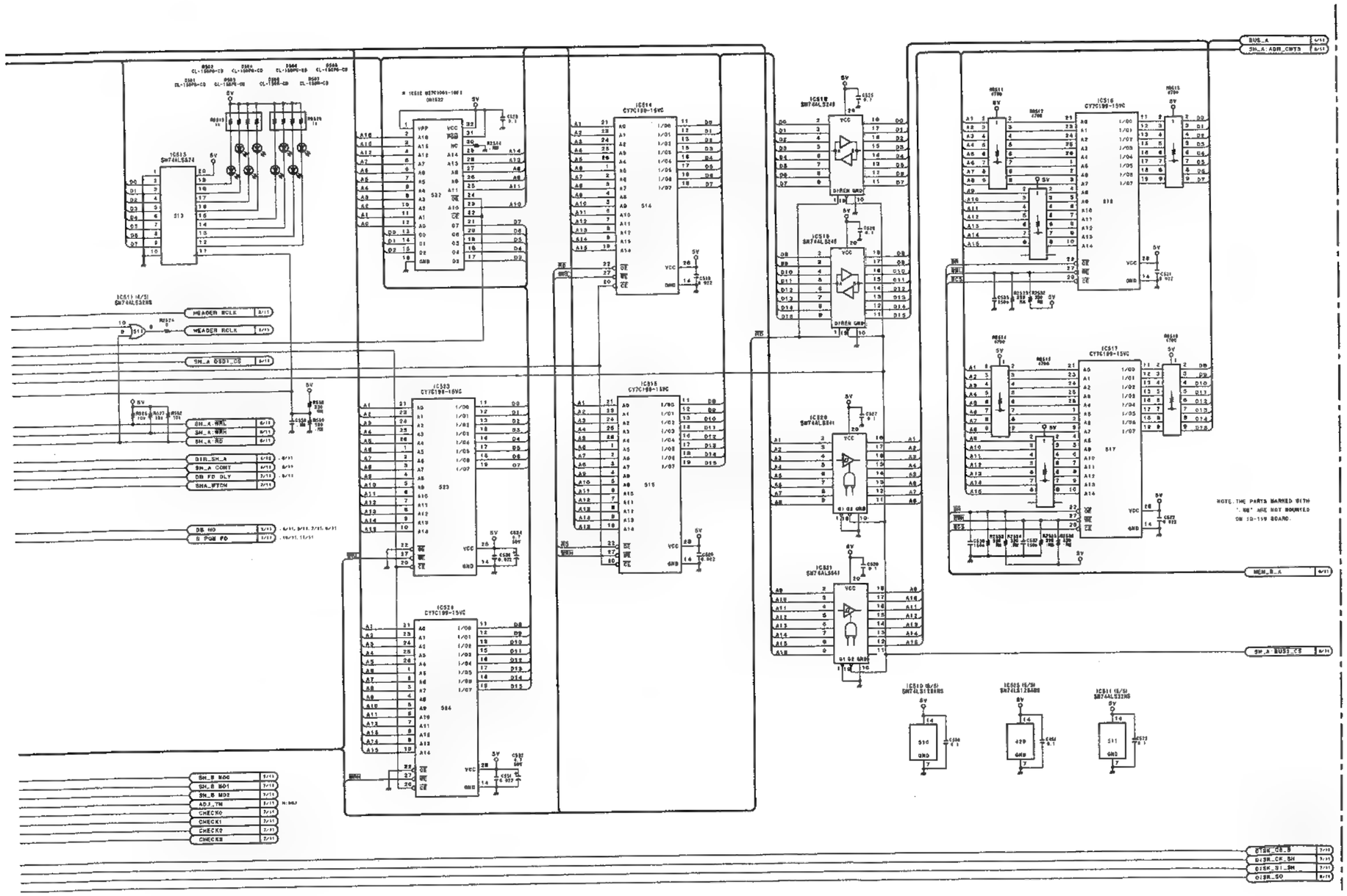

IO-119 (5/11)
PART NO 1-662-795-11
MODEL ESBK-7031
B-ESBK7031-IO119-11

AUDIO BLOCK ADDRESS GENERATOR

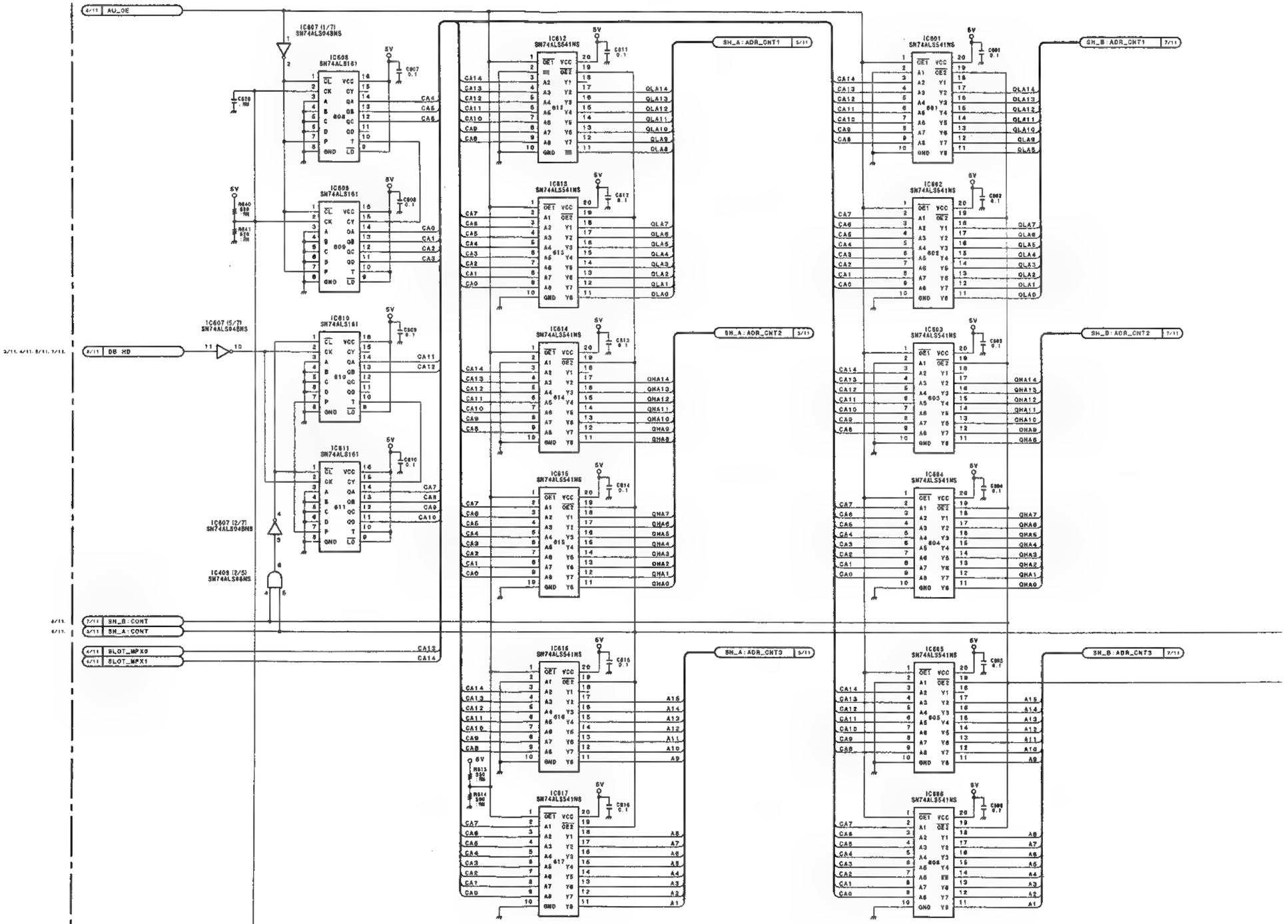

ESBK-7031

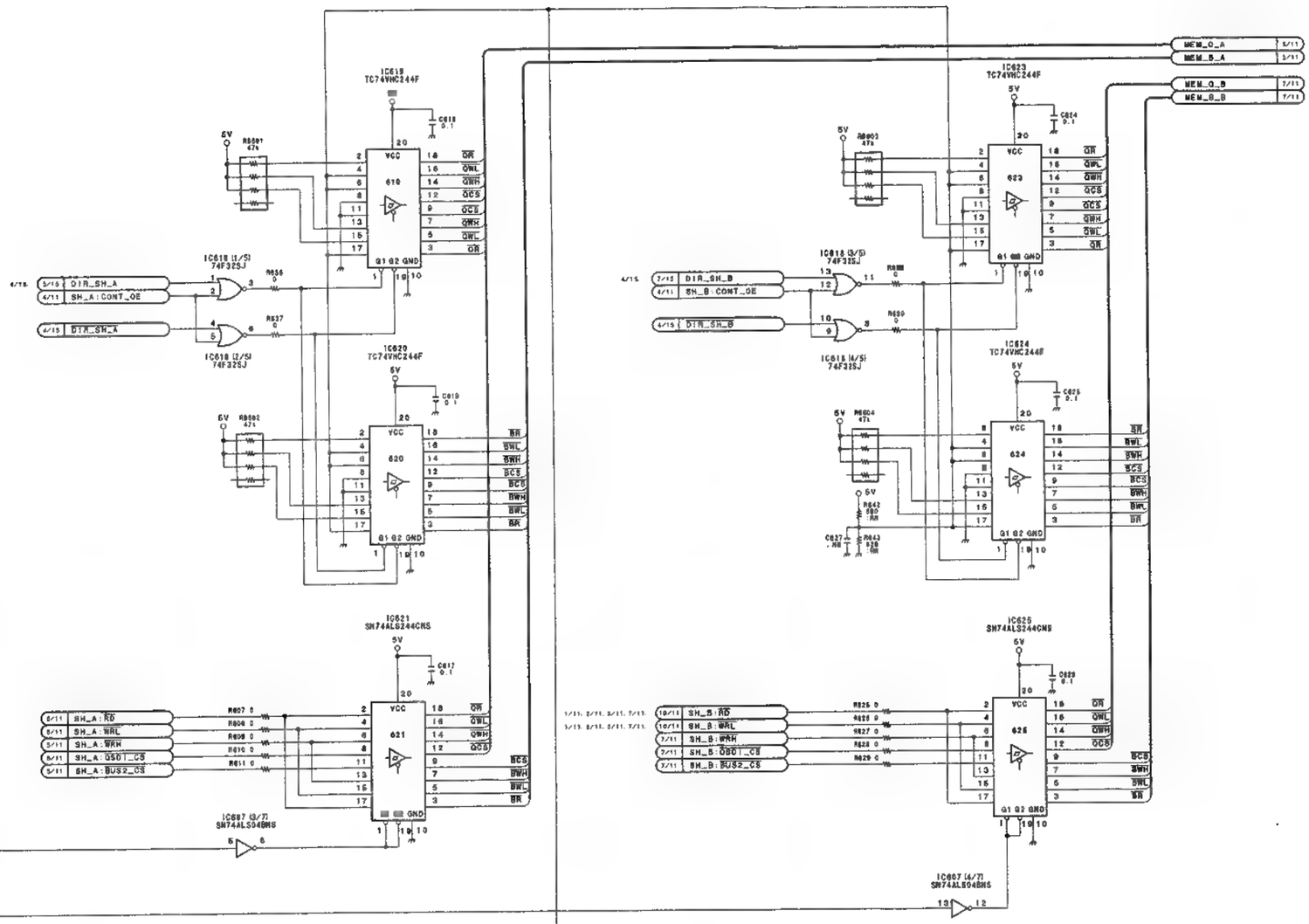

NOTE: THE PARTS MARKED WITH ". NW" ARE NOT MOUNTED ON IO-119 BOARD.

IO-119 (6/11)
PART NO 1-662-795-11
MODEL ESBK-7031
B-ESBK7031-IO119-11

AUDIO BLOCK B

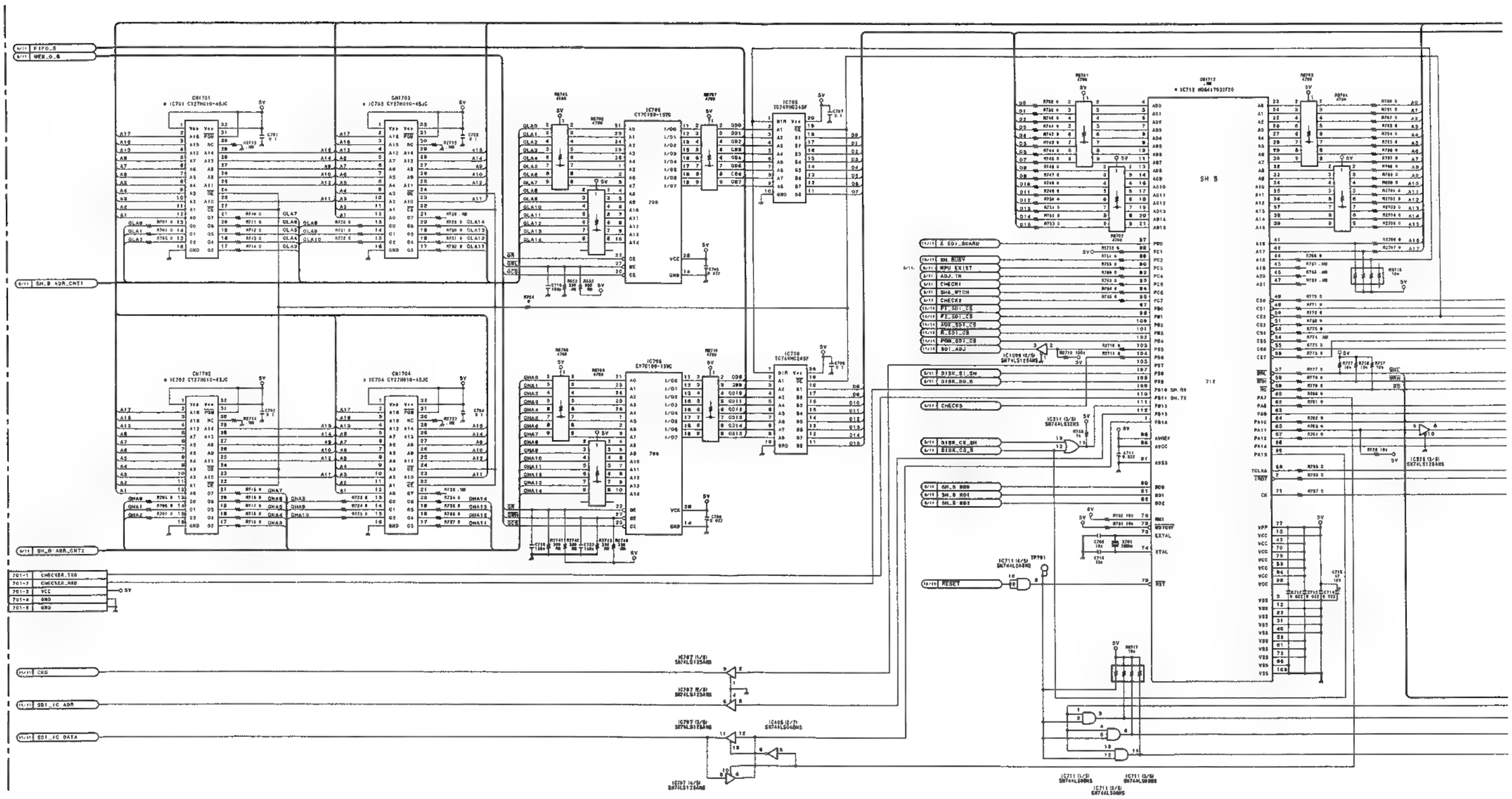

ESBK-7031

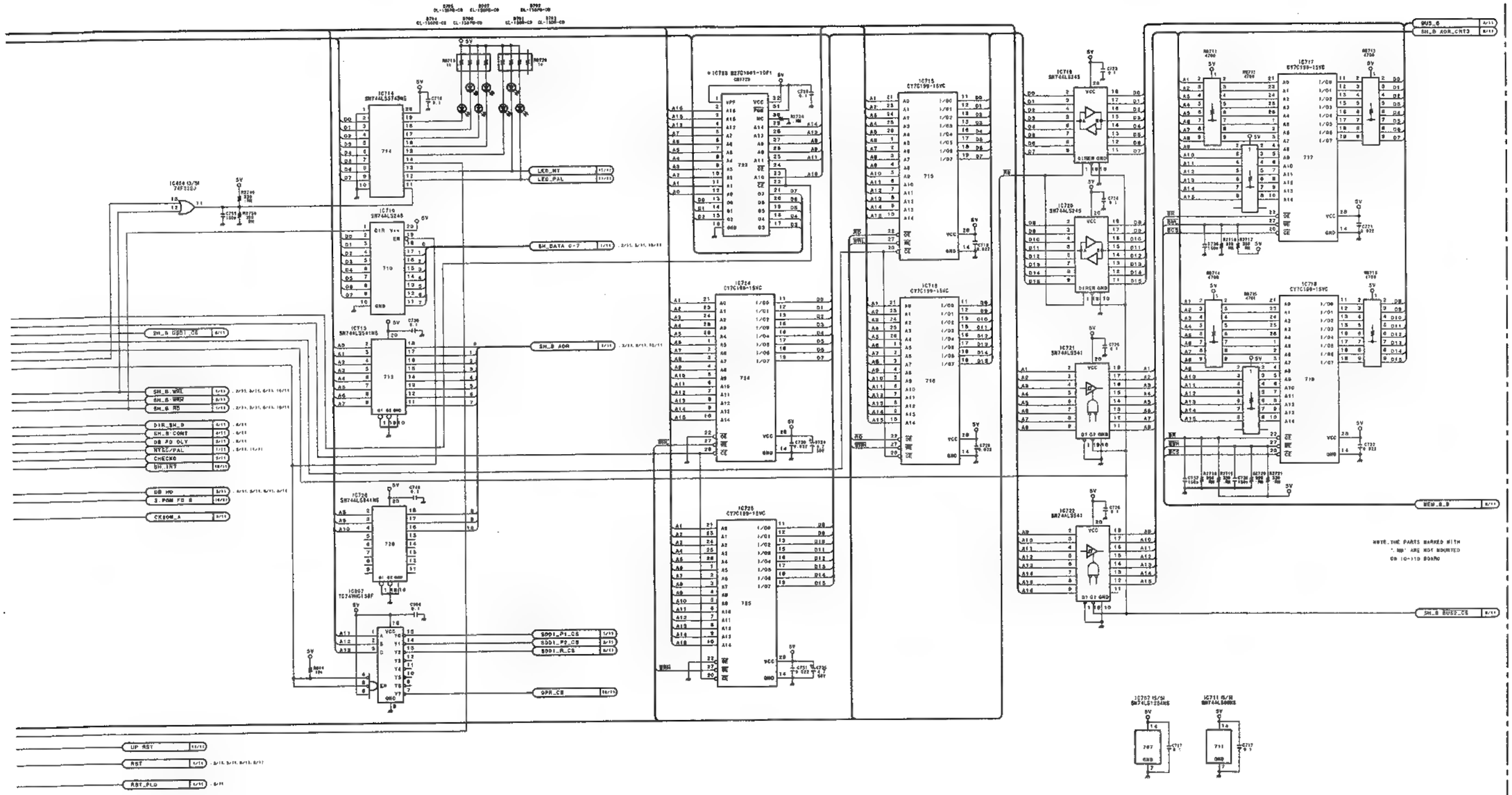

IO-119 (7/11)
PART NO 1-662-795-11
MODEL ESBK-7031
B-ESBK7031-IO119-11

PLL BLOCK

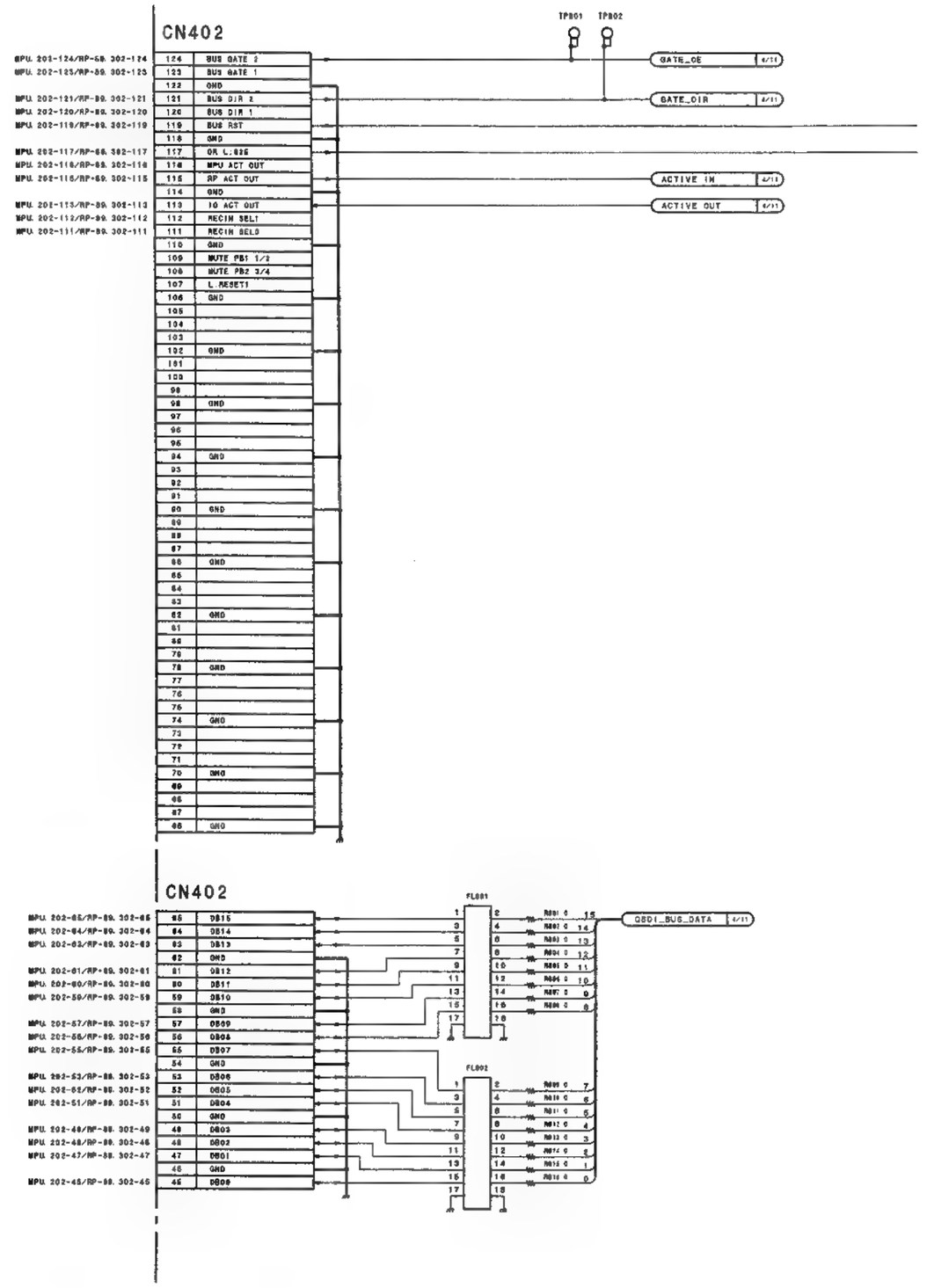

ESBK-7031

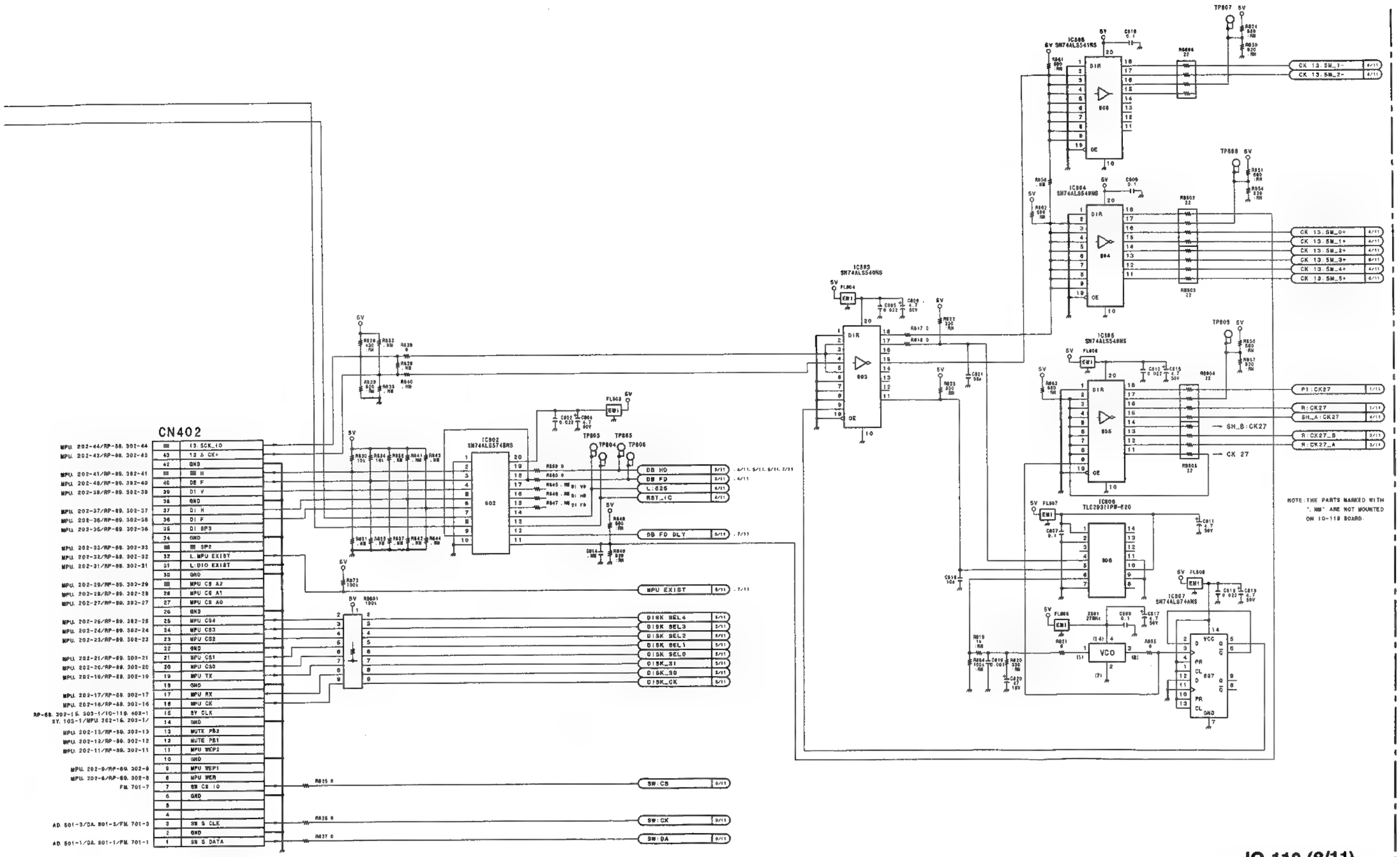

IO-119 (8/11)
PART NO 1-662-795-11
MODEL ESBK-7031
B-ESBK7031-IO119-11

DIGITAL AUDIO DECODER

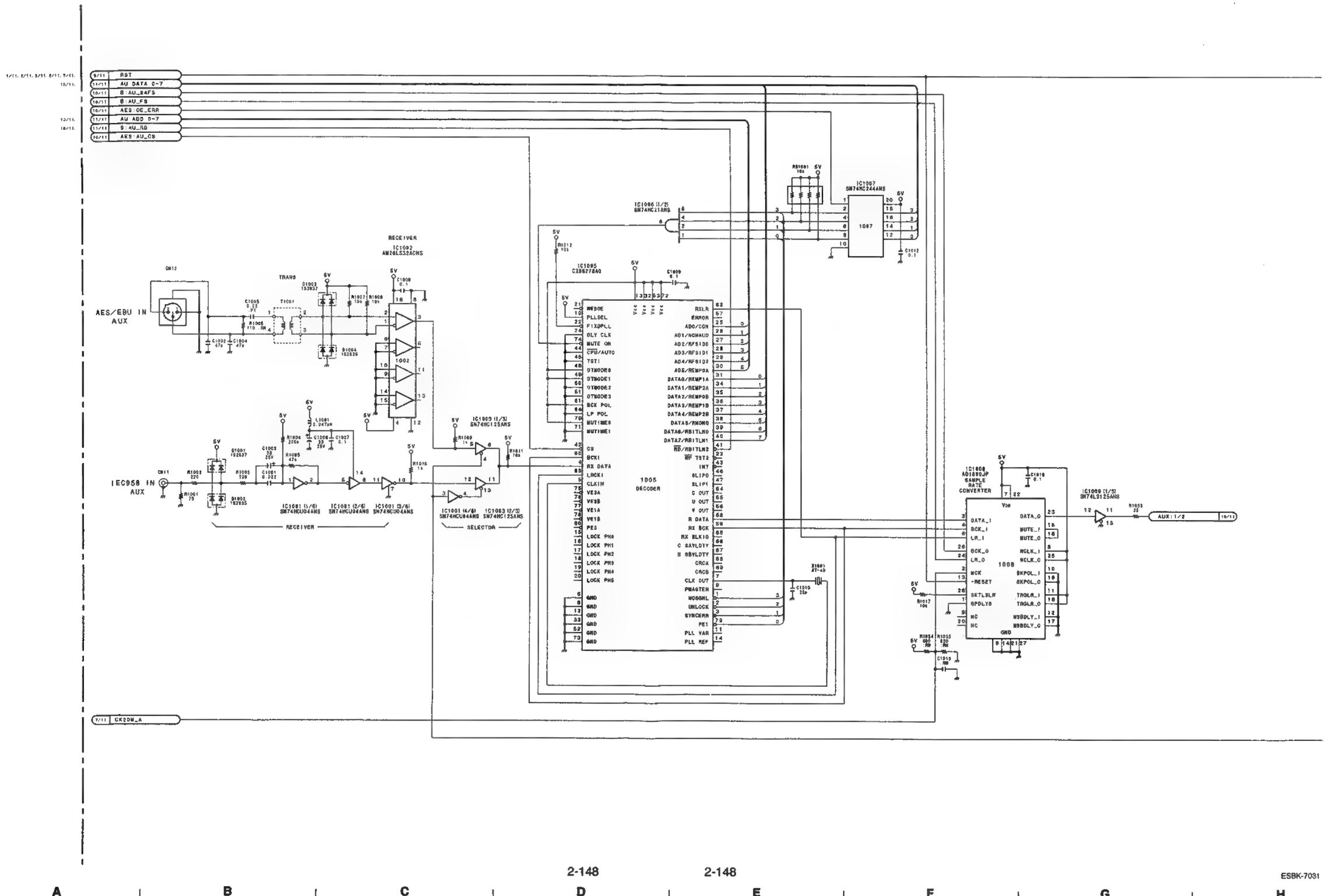

ESBK-7031

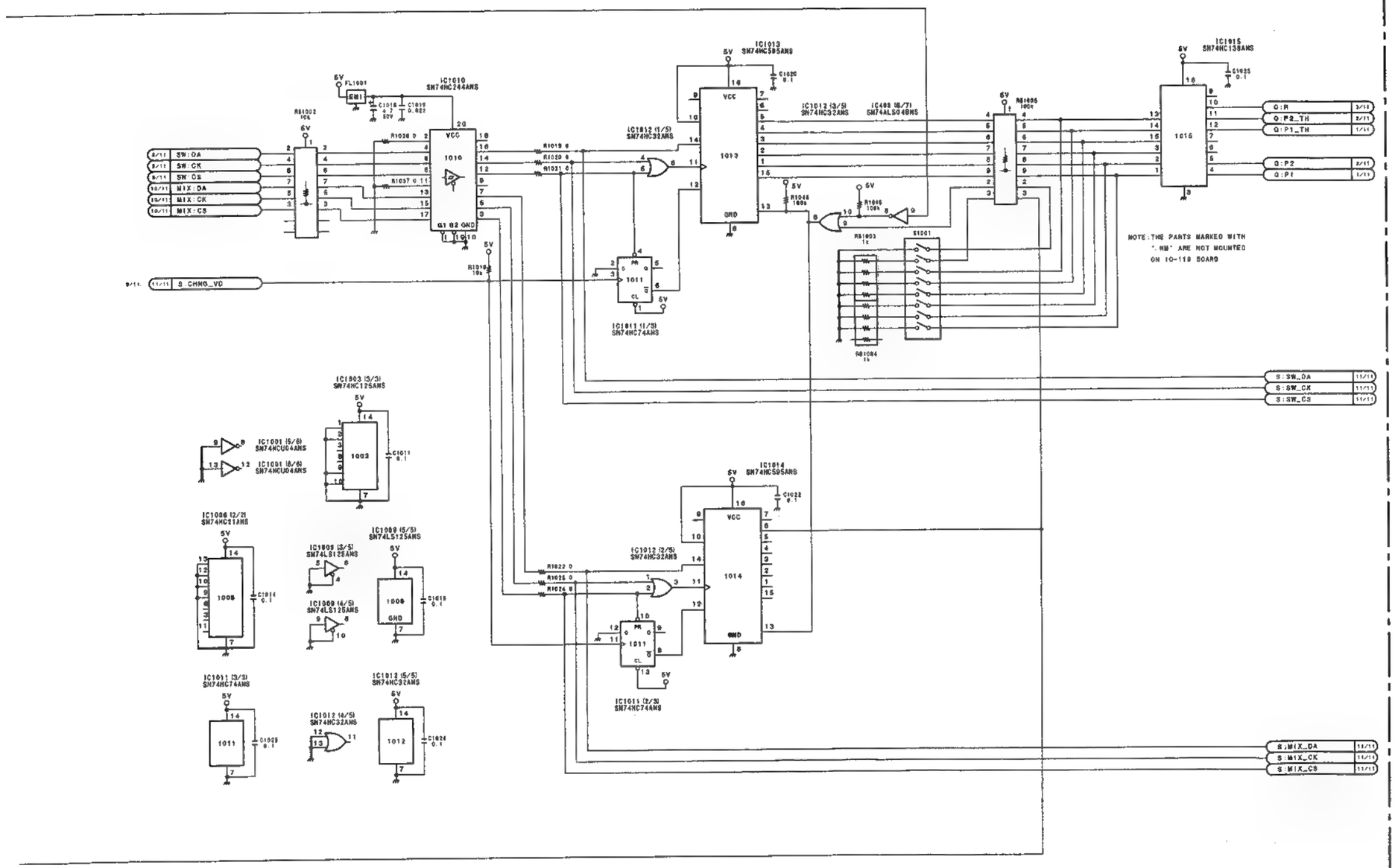

IO-119 (9/11)
PART NO 1-662-795-11
MODEL ESBK-7031
B-ESBK7031-IO119-11

REGULATOR & SYSTEM CONTROL

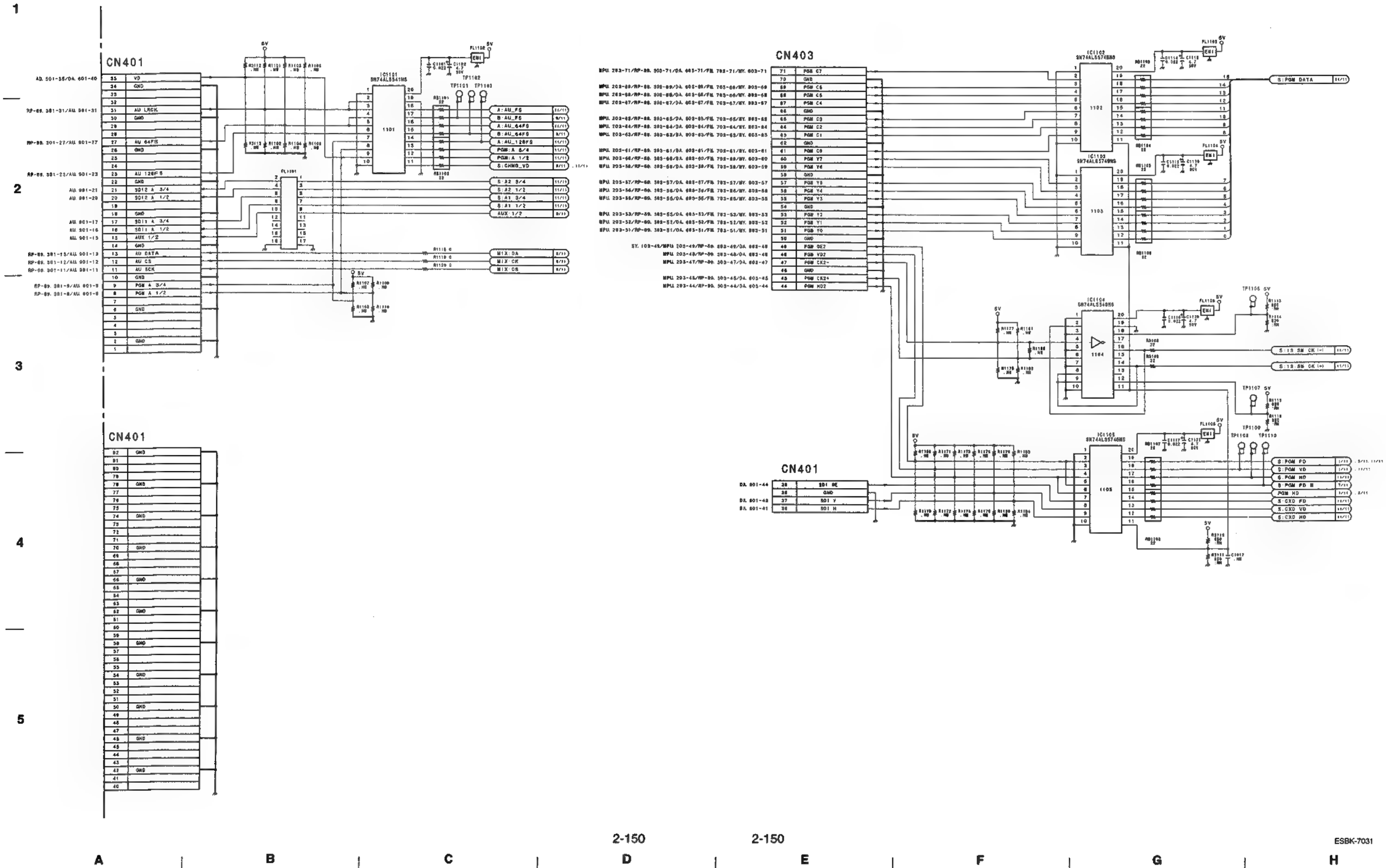

ESBK-7031

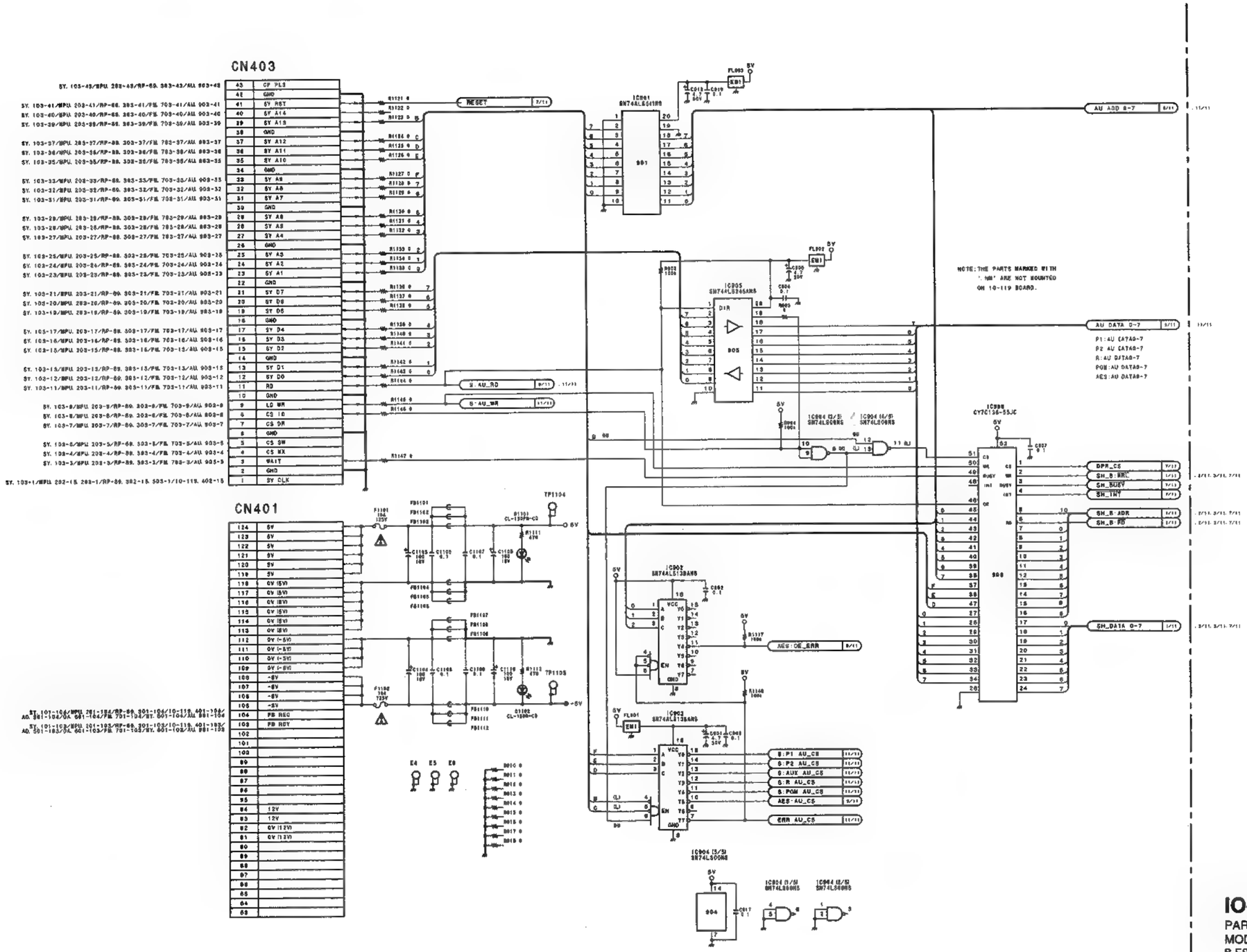

IO-119 (10/11)
PART NO 1-662-795-11
MODEL ESBK-7031
B-ESBK7031-IO119-11

IO-148 CONNECT

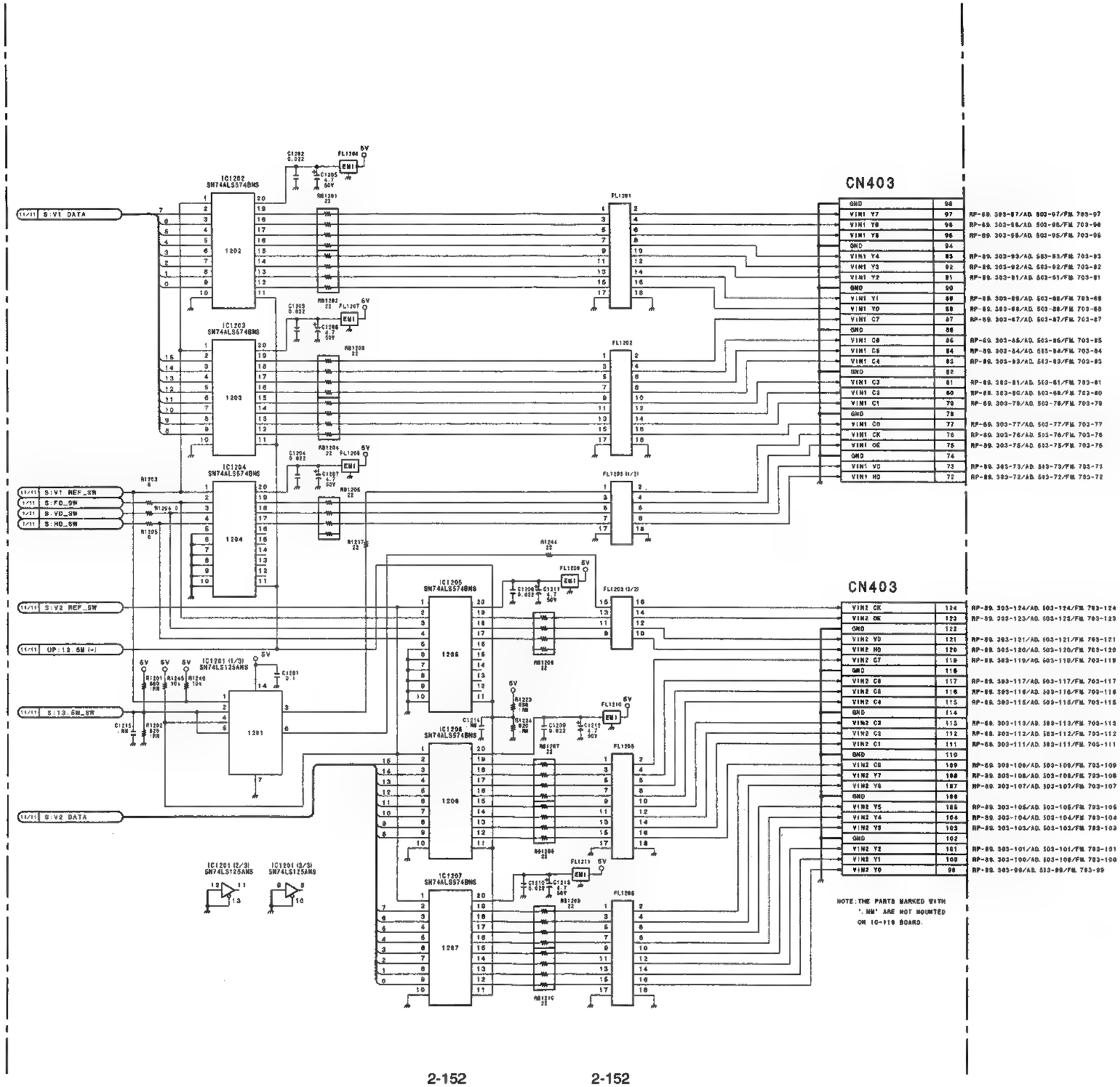

ESBK-7031

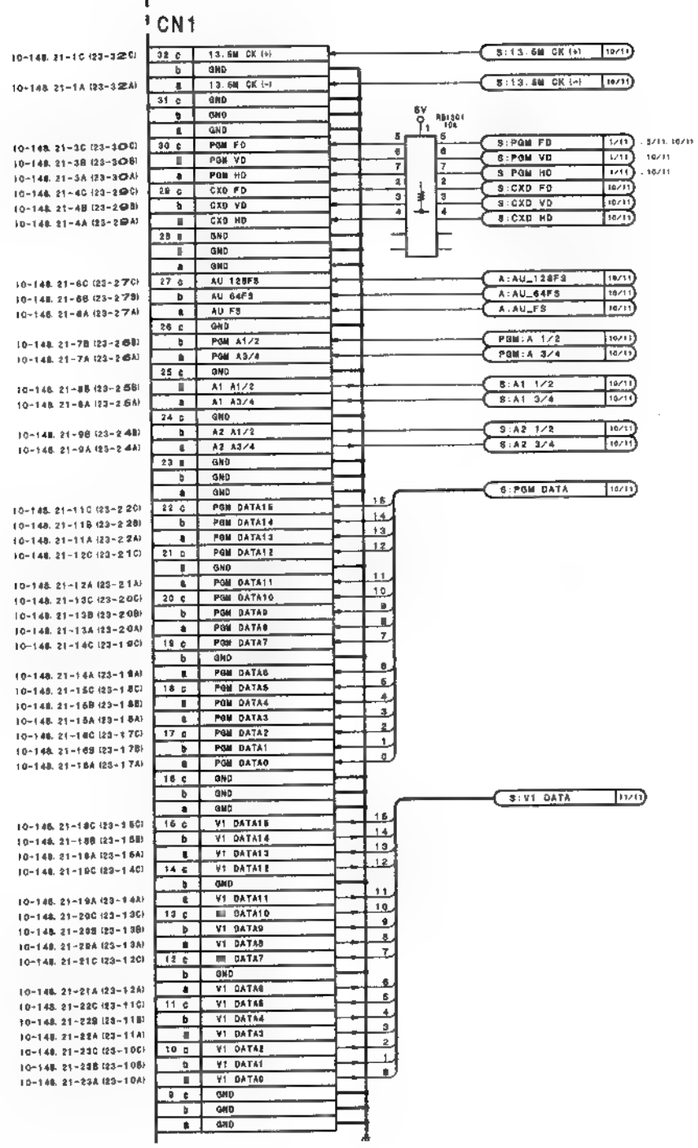

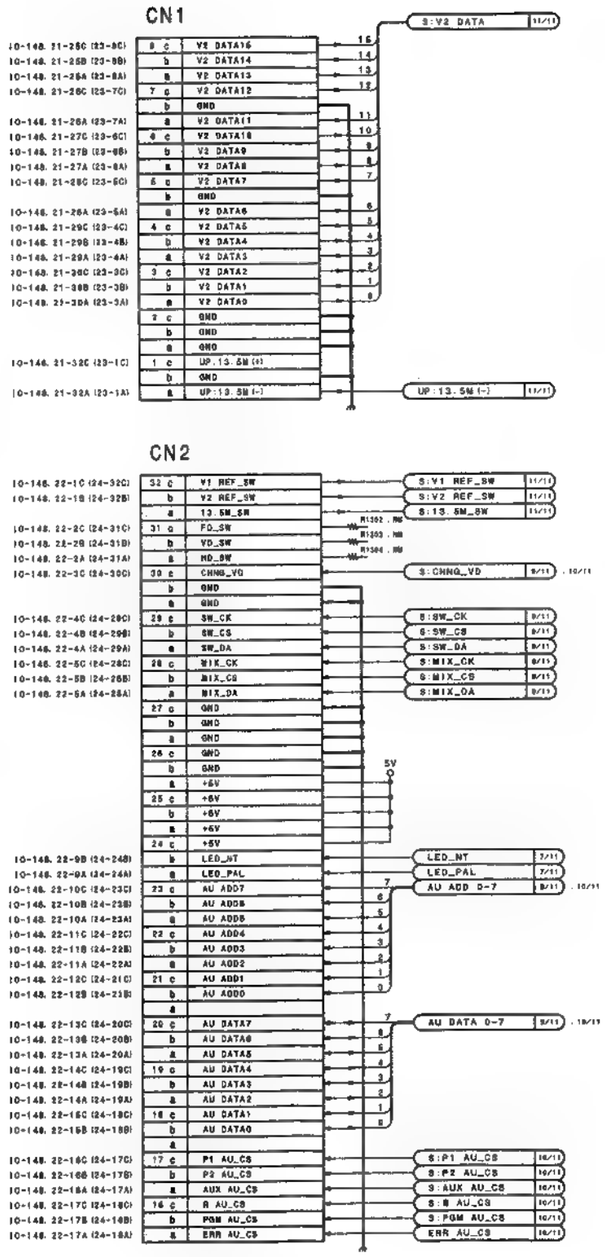

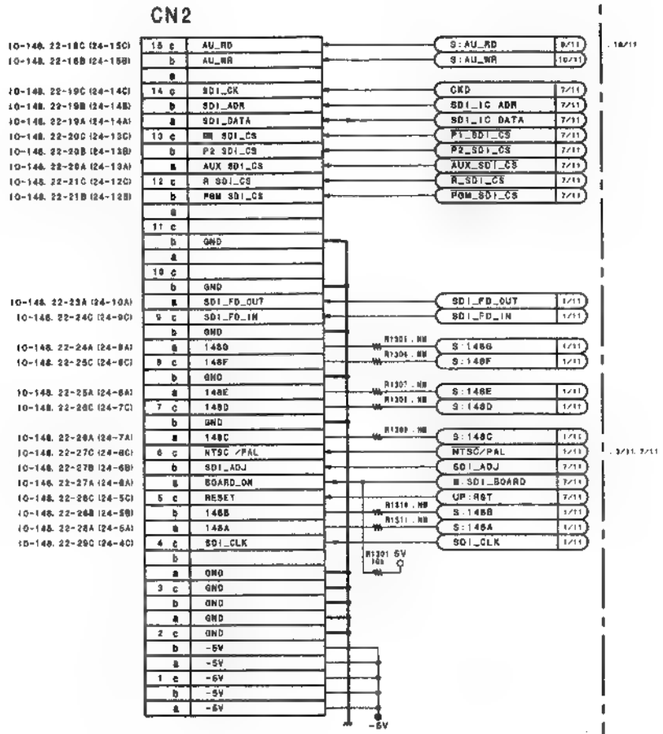

NOTE : THE PARTS MARKED WITH "*" ARE NOT MOUNTED ON IO-119 BOARD.

IO-119 (11/11)
PART NO 1-662-795-11
MODEL ESBK-7031
B-ESBK7031-IO119-11

2-153 2-153

ESBK-7031

SDI P1IN DECOD ER

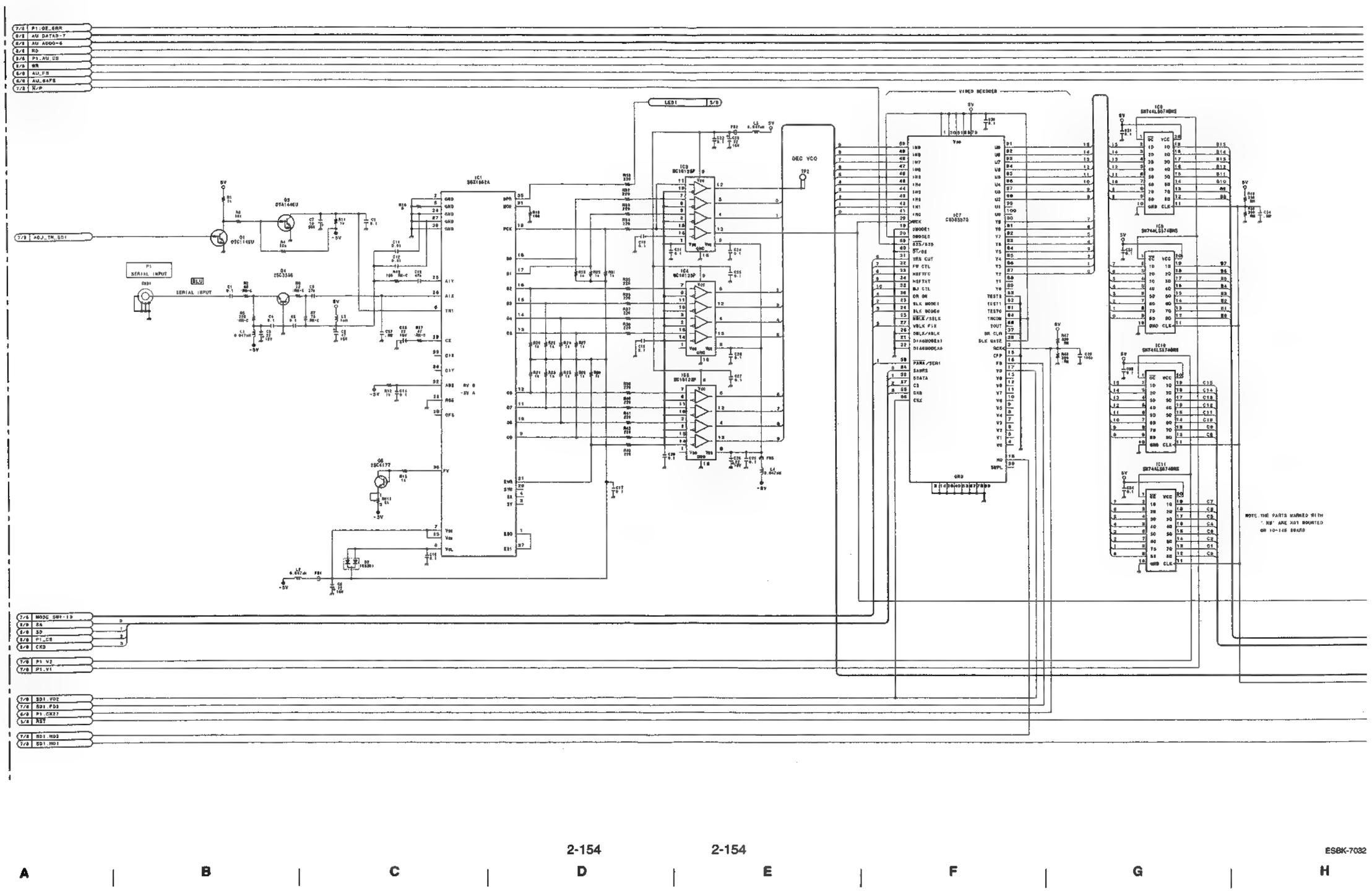

ESBK-7032

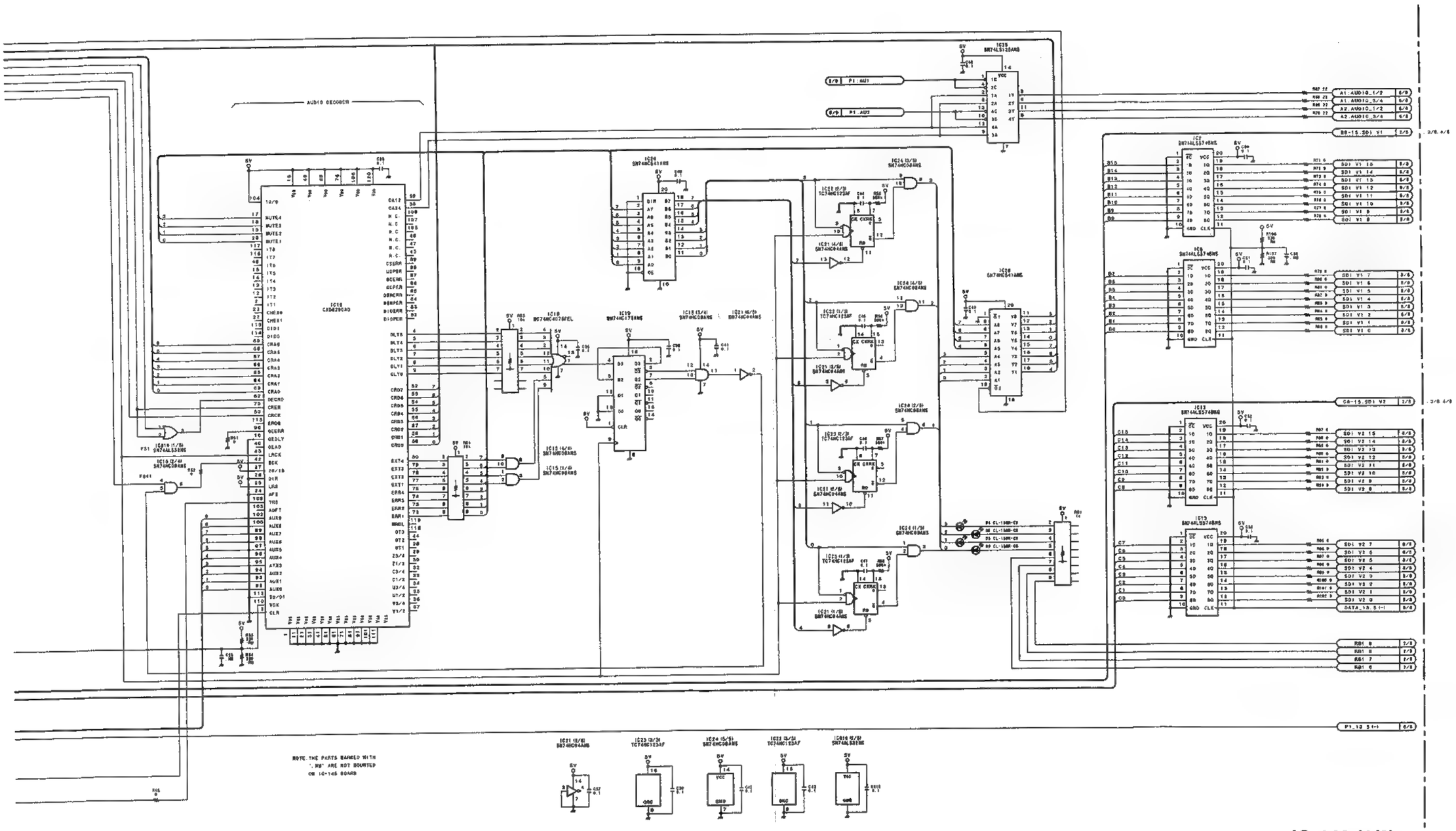

IO-148 (1/8)
PART NO 1-661-796-11
MODEL ESBK-7032
B-ESBK7032-IO148-11

SDI P2IN DECODER

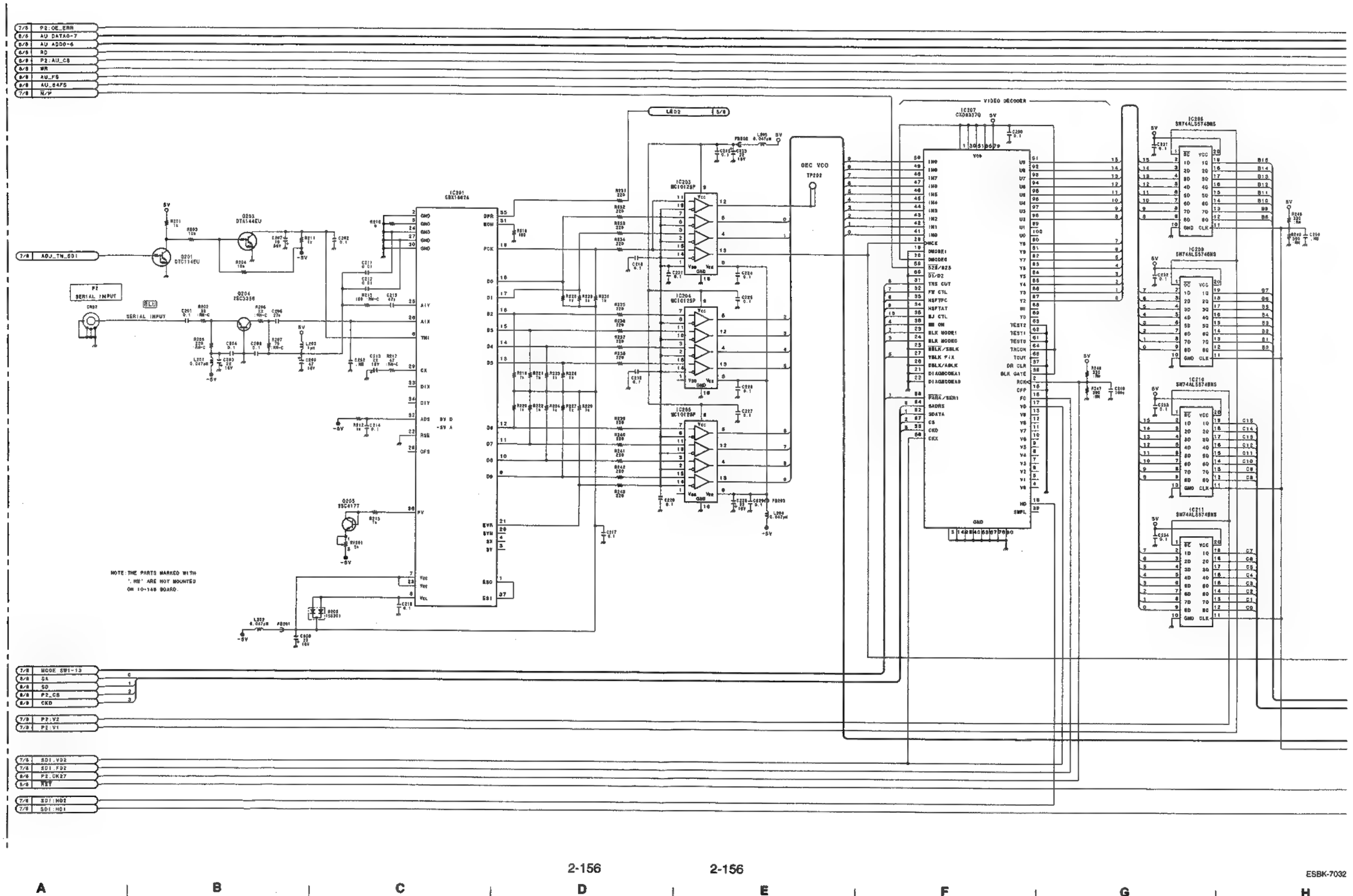

ESBK-7032

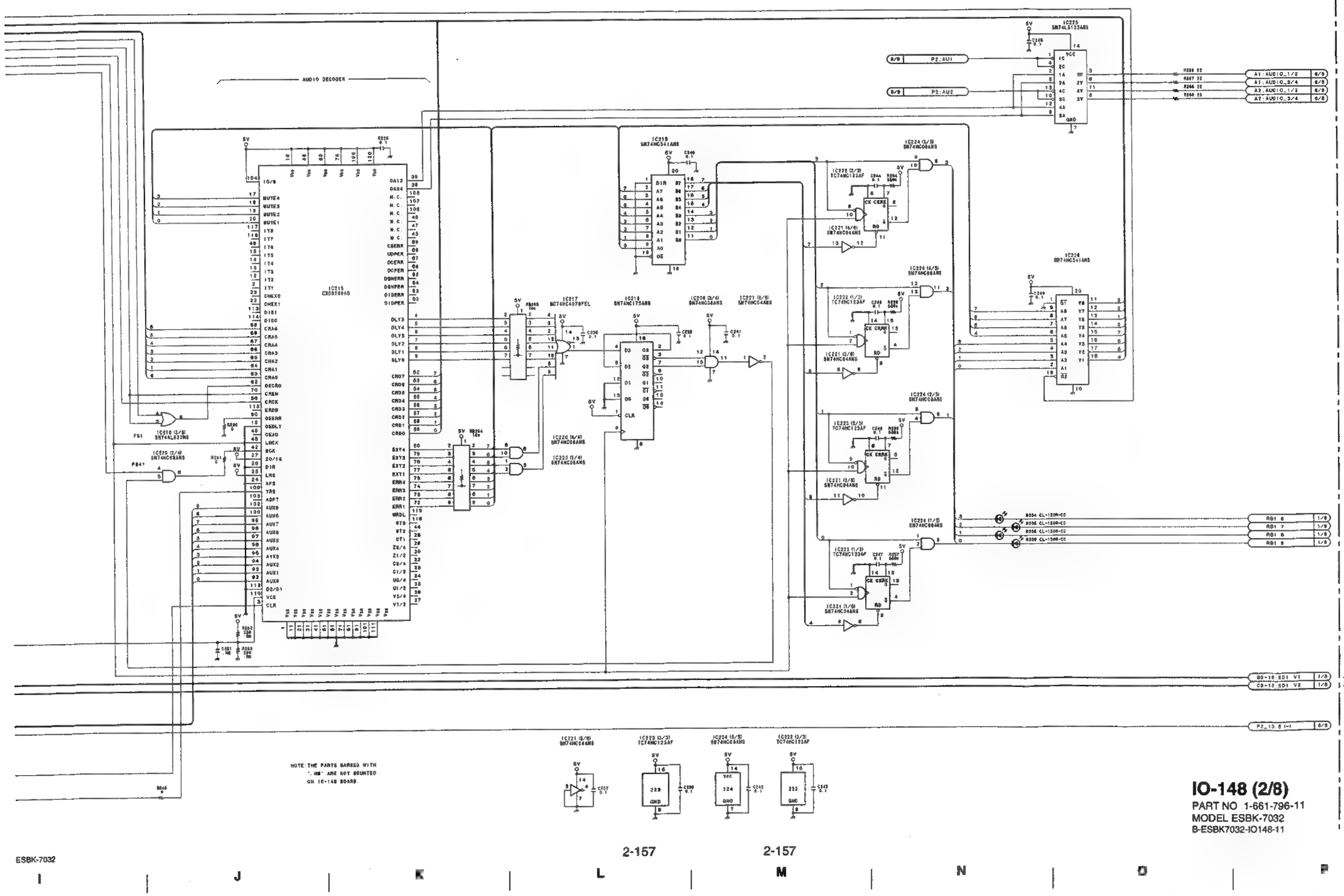

IO-148 (2/8)
PART NO 1-661-796-11
MODEL ESBK-7032
B-ESBK7032-IO148-11

SDI AUXIN DECODER

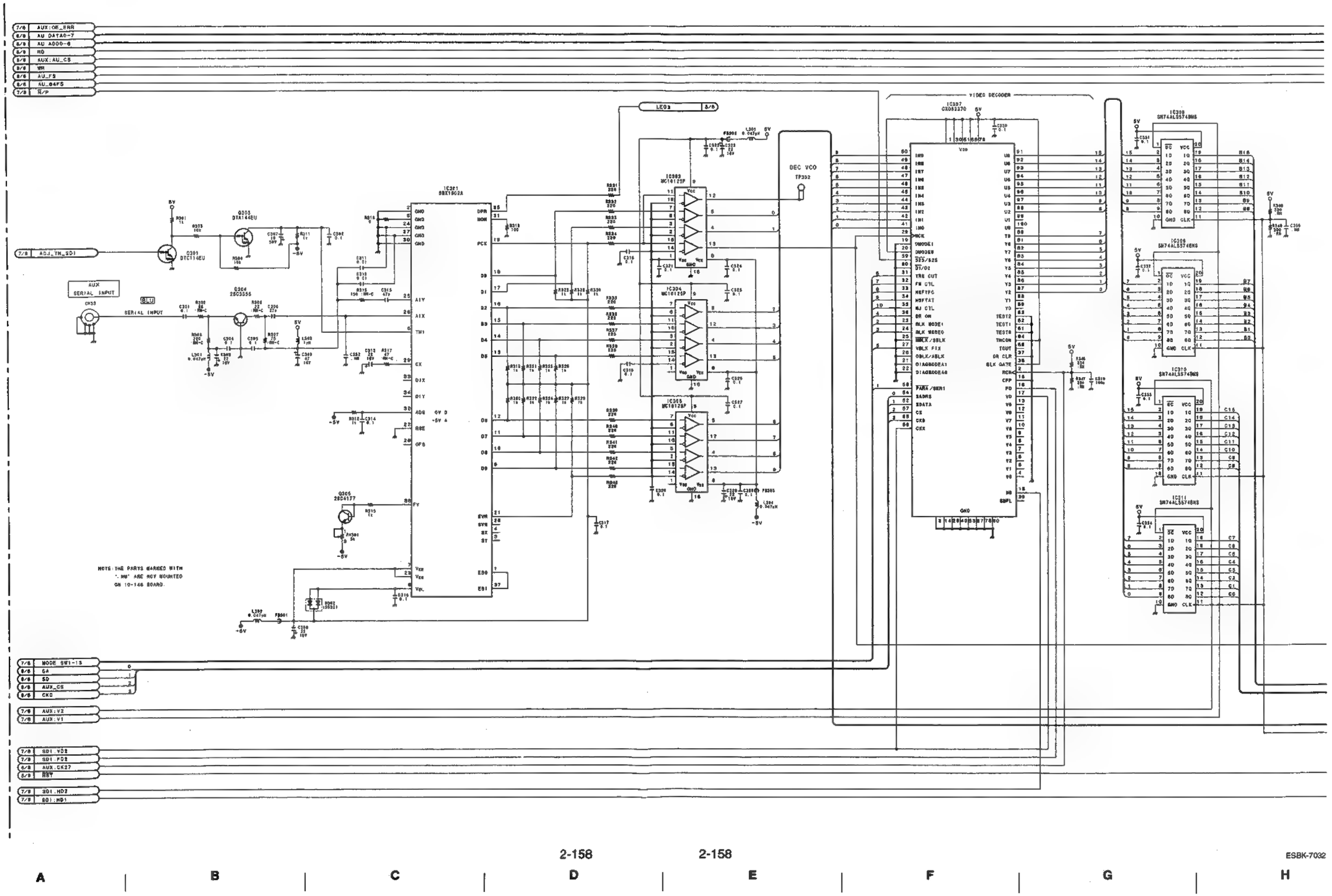

ESBK-7032

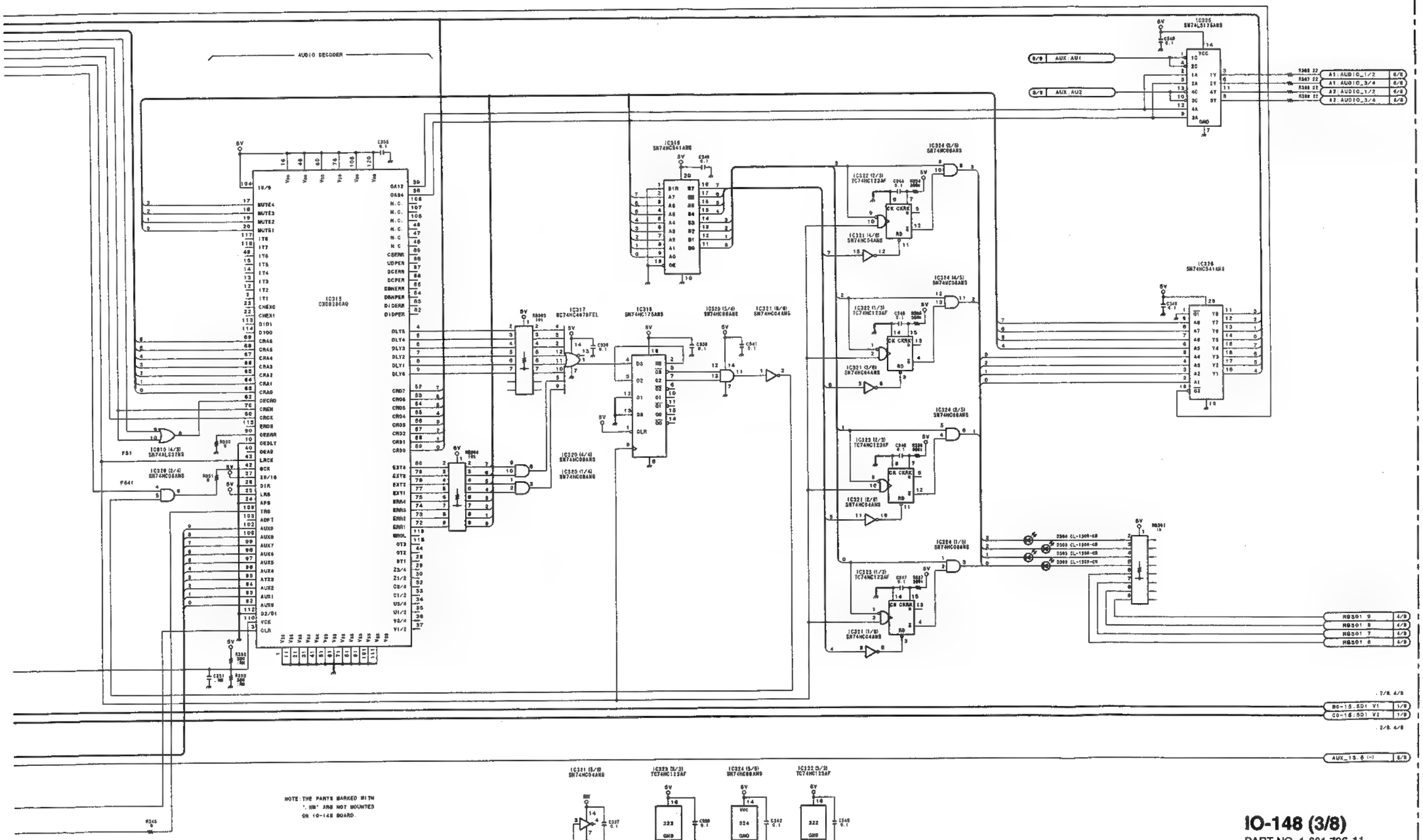

IO-148 (3/8)
PART NO 1-661-796-11
MODEL ESBK-7032
B-ESBK7032-IO148-11

SDI RIN DECODER

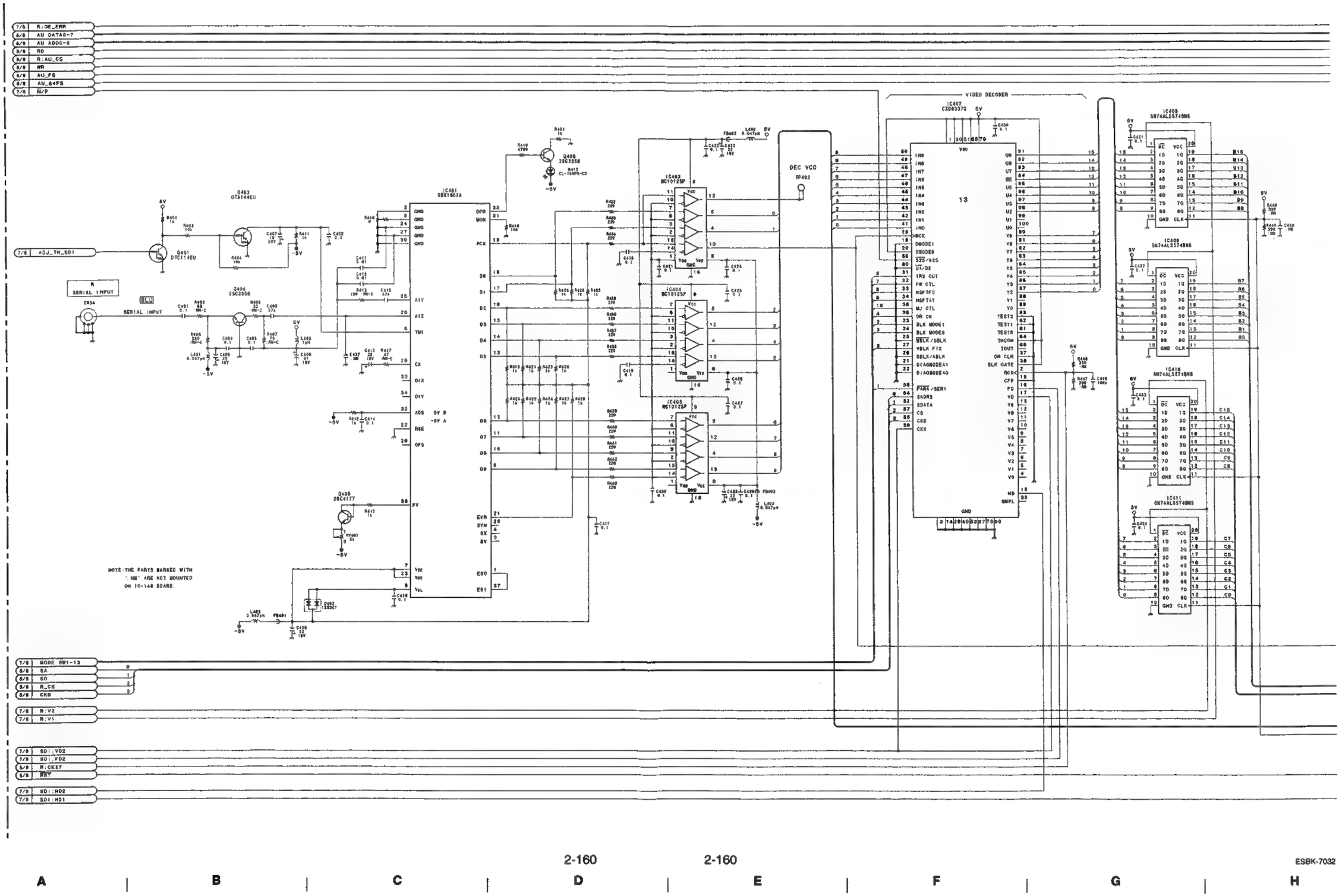

ESBK-7032

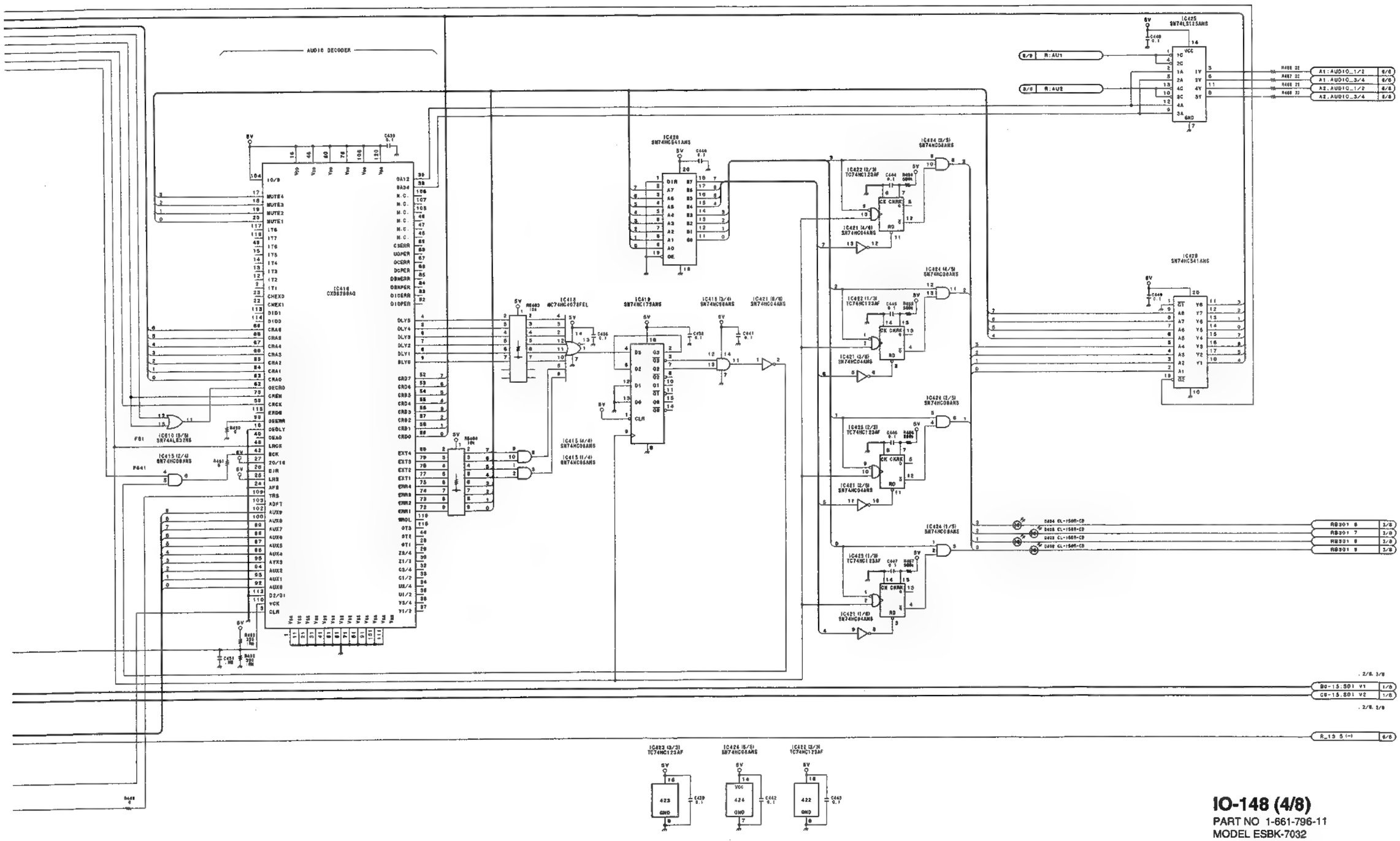

IO-148 (4/8)
PART NO 1-661-796-11
MODEL ESBK-7032
8-ESBK7032-IO148-11

SDI PGMOUT ENCODER

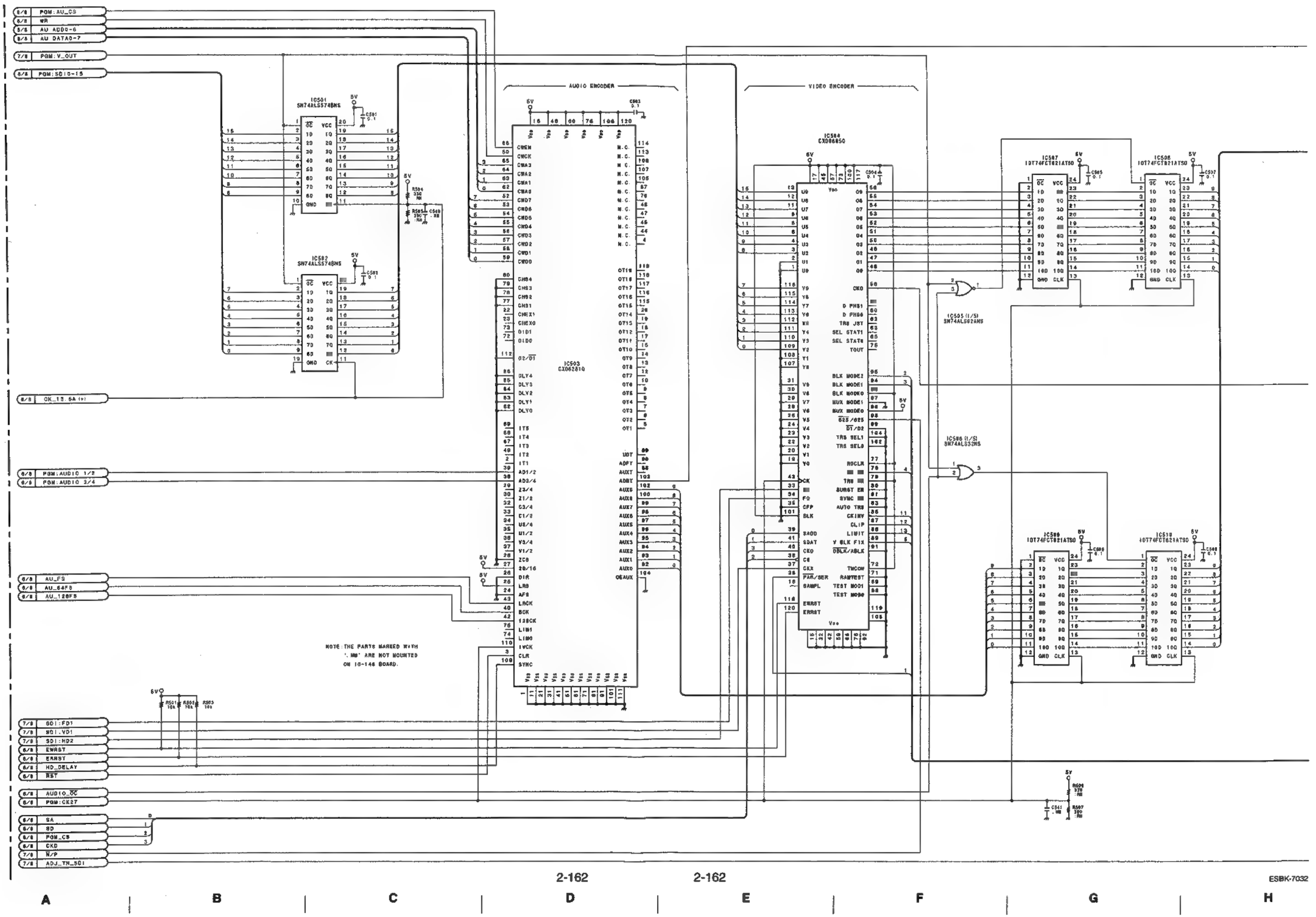

ESBK-7032

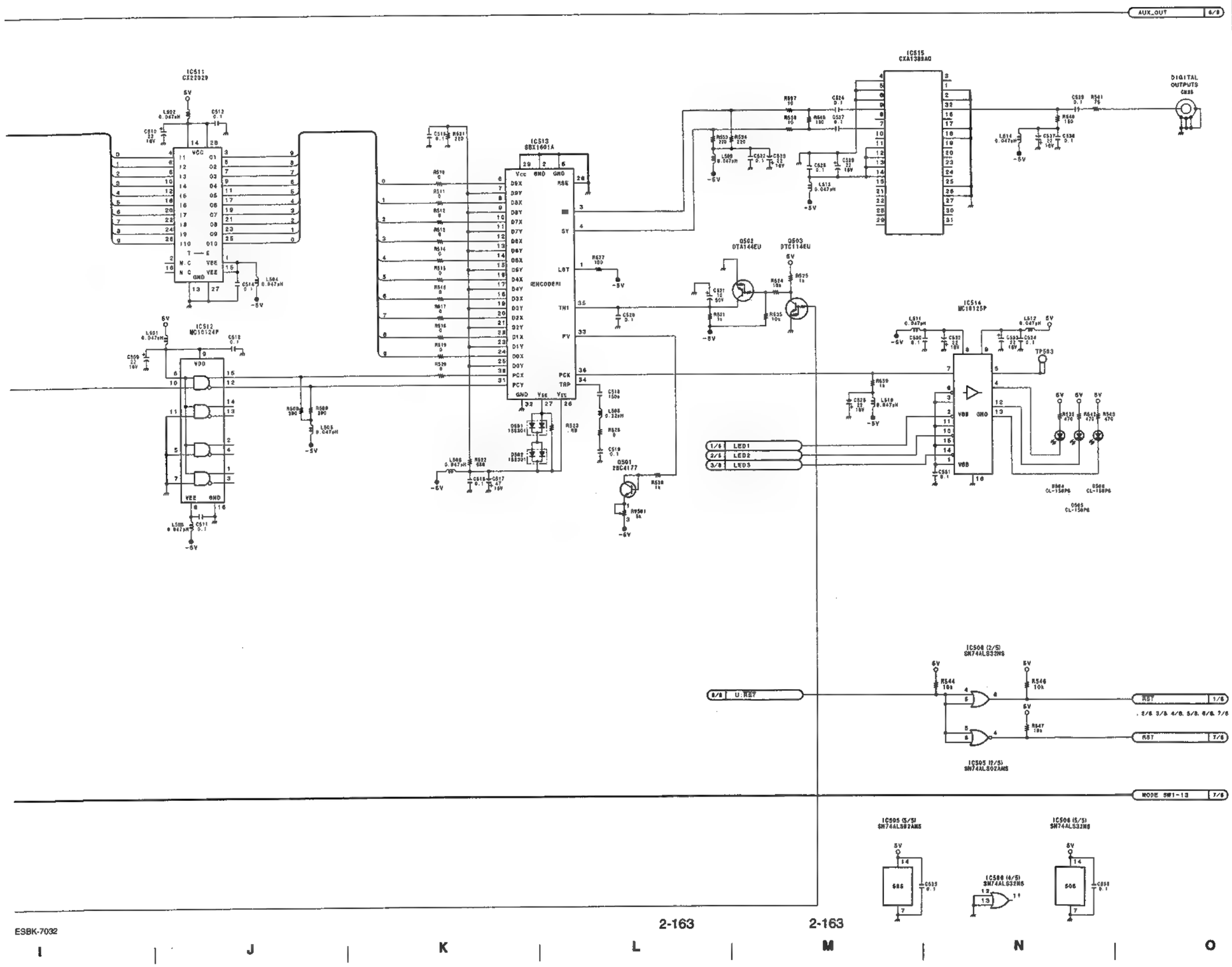

ESBK-7032

2-163 2-163

IO-148 (5/8)
PART NO 1-661-796-11
MODEL ESBK-7032
B-ESBK7032-IO148-11

PLL BLOCK & TIMING CONTROL

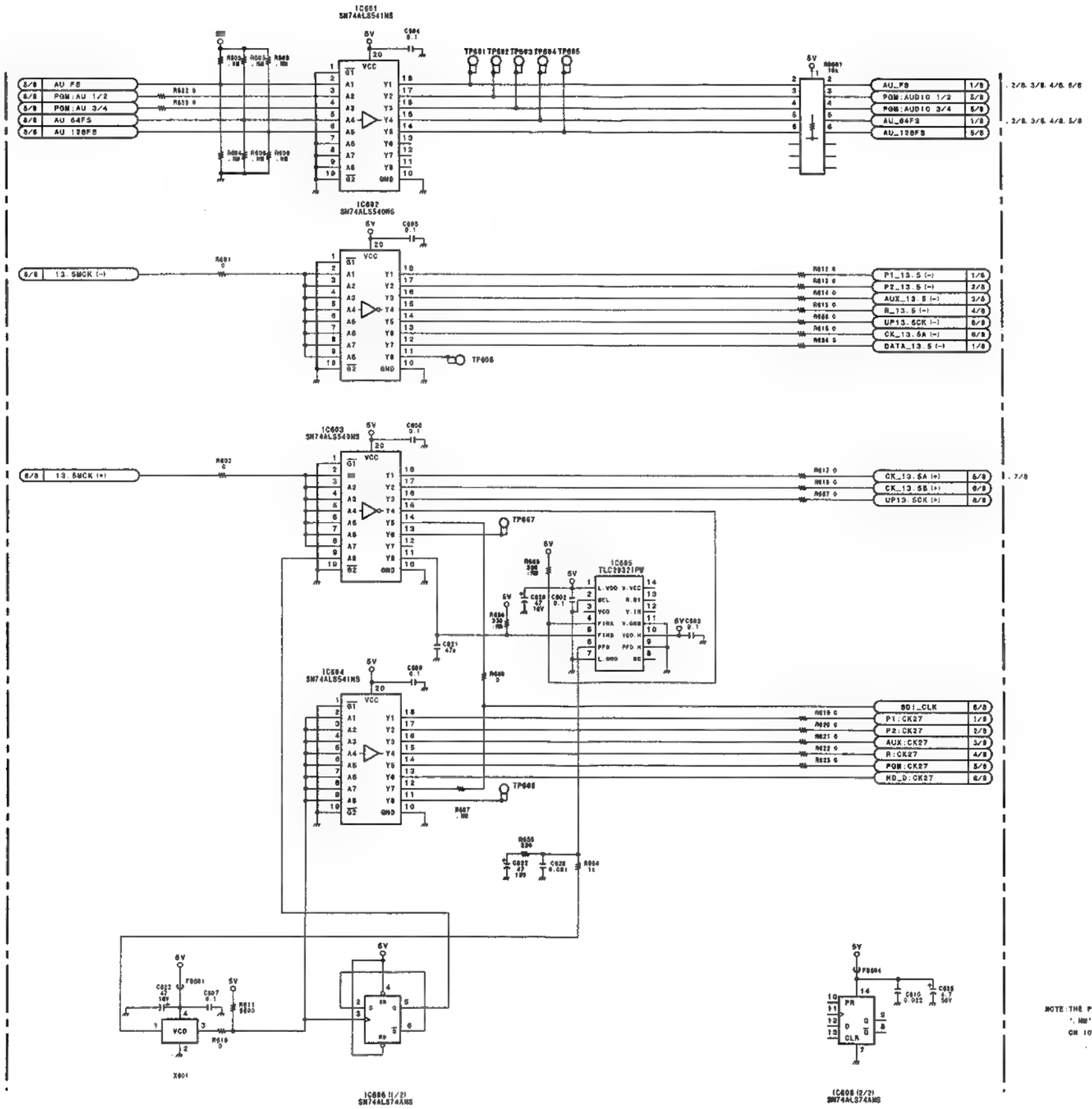

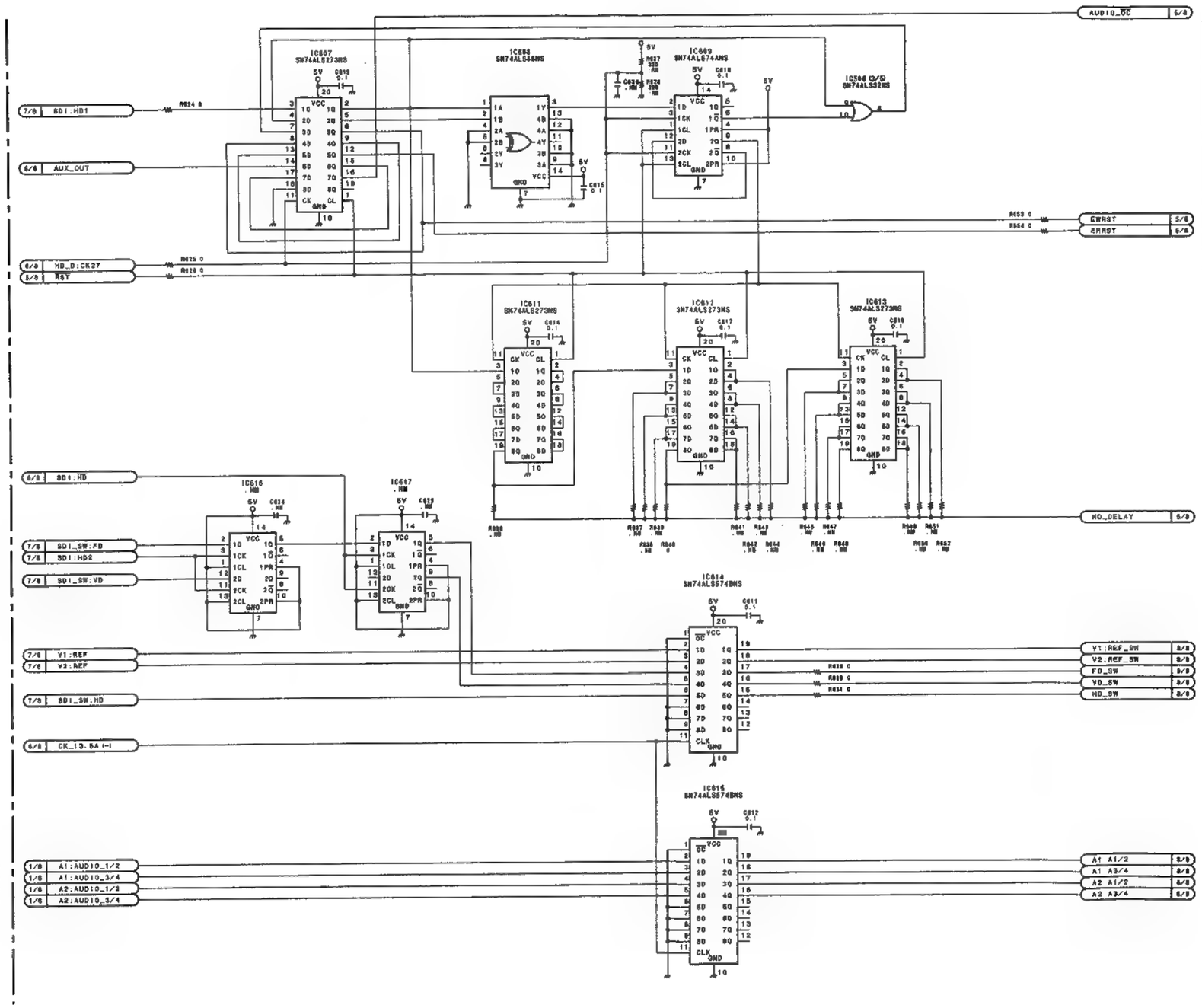

NOTE:THE PARTS MARKED WITH '.NM' ARE NOT MOUNTED ON IO-148 BOARD

IO-148 (6/8)
PART NO 1-661-796-11
MODEL ESBK-7032
B-ESBK7032-IO148-11

SWITCHING CONTROL

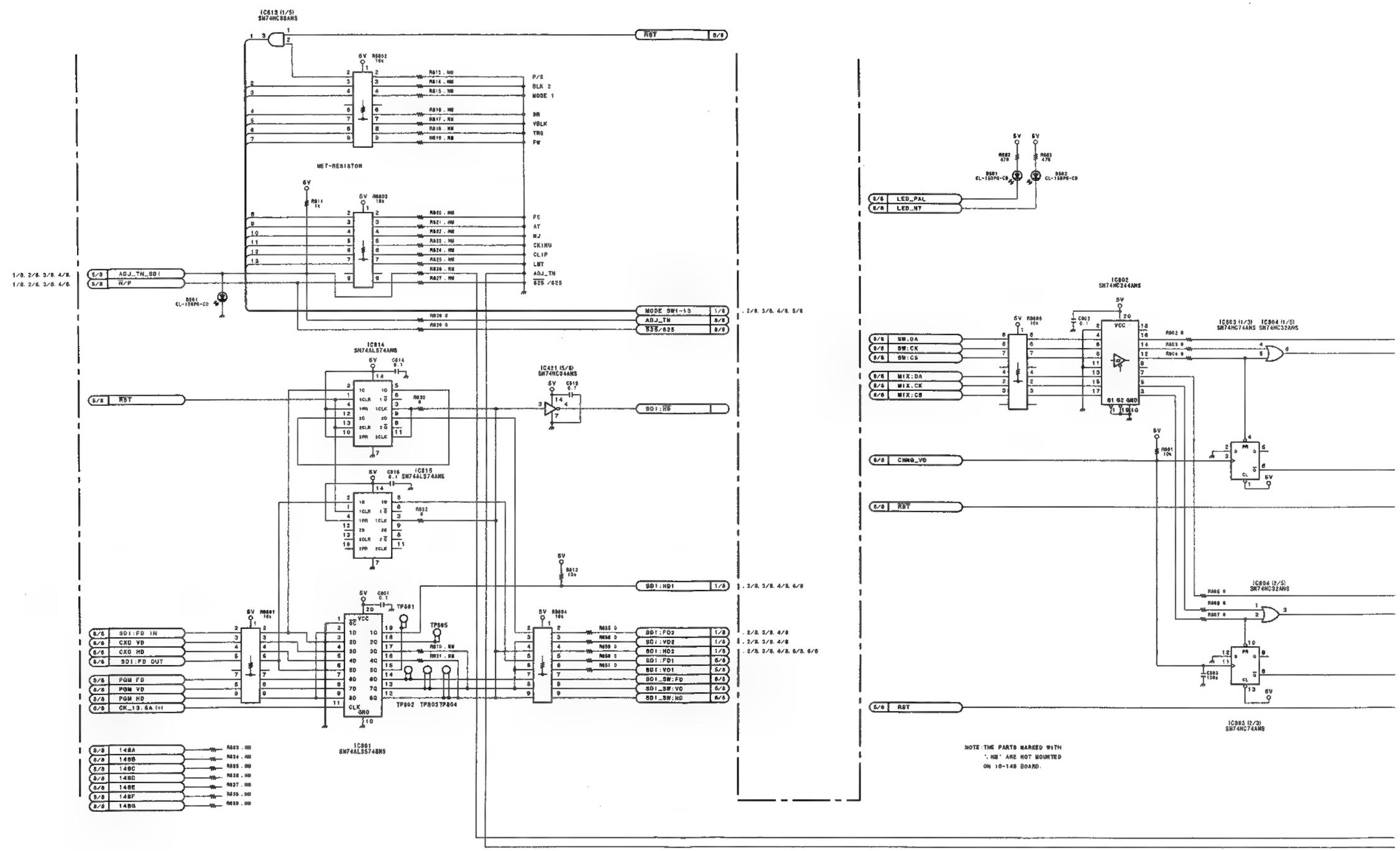

ESBK-7032

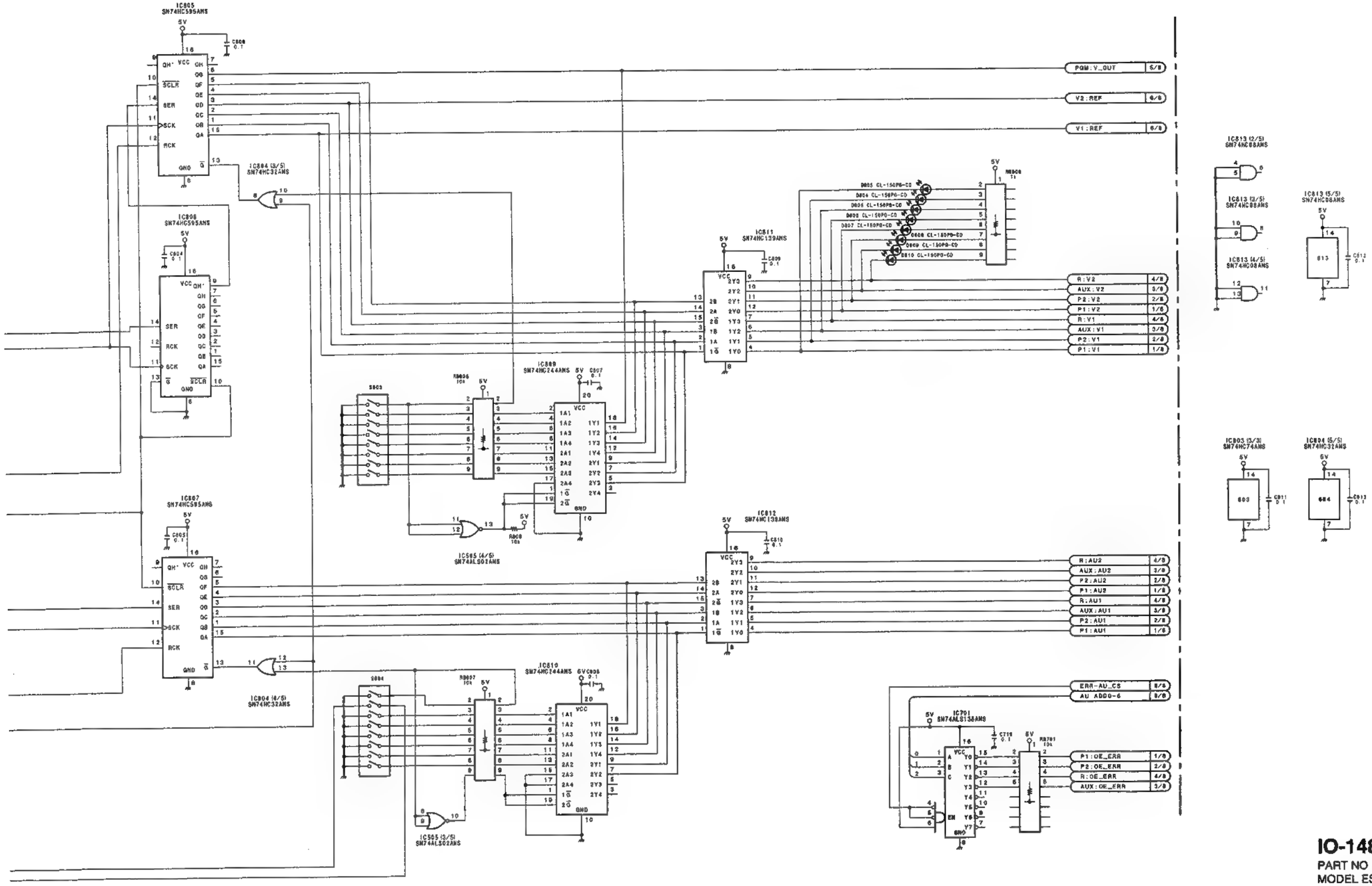

IO-148 (7/8)
PART NO 1-661-796-11
MODEL ESBK-7032
B-ESBK7032-IO148-11

IO-119 CONNECT

CN21

CN21 (TO IO-119)

	A	B	C
1	13.5MCK (-)	GND	13.5MCK (+)
2	GND	GND	GND
3	PGM HD	PGM VD	PGM FD
4	CXD HD	CXD VD	CXD FD
5	GND	GND	GND
6	AU F5	AU 64F5	AU 128F5
7	PGM:AU 3/4	PGM:AU 1/2	GND
8	A1 A3/4	A1 A1/2	GND
9	A2 A3/4	A2 A1/2	GND
10	GND	GND	GND
11	PGM DATA13	PGM DATA14	PGM DATA15
12	PGM DATA11	GND	PGM DATA12
13	PGM DATA8	PGM DATA9	PGM DATA10
14	PGM DATA6	GND	PGM DATA7
15	PGM DATA3	PGM DATA4	PGM DATA5
16	PGM DATA0	PGM DATA1	PGM DATA2
17	GND	GND	GND
18	SDI V1 13	SDI V1 14	SDI V1 15
19	SDI V1 11	GND	SDI V1 12
20	SDI V1 8	SDI V1 9	SDI V1 10
21	SDI V1 6	GND	SDI V1 7
22	SDI V1 3	SDI V1 4	SDI V1 5
23	SDI V1 0	SDI V1 1	SDI V1 2
24	GND	GND	GND
25	SDI V2 13	SDI V2 14	SDI V2 15
26	SDI V2 11	GND	SDI V2 12
27	SDI V2 8	SDI V2 9	SDI V2 10
28	SDI V2 6	GND	SDI V2 7
29	SDI V2 3	SDI V2 4	SDI V2 5
30	SDI V2 0	SDI V2 1	SDI V2 2
31	GND	GND	GND
32	UP13.5CK (-)	GND	UP13.5CK (+)

CN23

CN23 (TO IO-119)

	A	B	C
32	13.5MCK (-)	GND	13.5MCK (+)
31	GND	GND	GND
30	PGM HD	PGM VD	PGM [redacted]
29	CXD HD	CXD VD	CXD FD
28	GND	GND	GND
27	AU F5	AU 64F5	AU 128F5
[redacted]	PGM:AU 3/4	PGM:AU 1/2	GND
25	A1 A3/4	A1 A1/2	GND
24	A2 A3/4	A2 A1/2	GND
23	GND	GND	GND
22	PGM DATA13	PGM DATA14	PGM DATA15
21	PGM DATA11	GND	PGM DATA12
20	PGM DATA8	PGM DATA9	PGM DATA10
[redacted]	PGM DATA6	GND	PGM DATA7
18	PGM DATA3	PGM DATA4	PGM DATA5
17	PGM DATA0	PGM DATA1	PGM DATA2
16	GND	GND	GND
15	SDI V1 13	SDI V1 14	SDI V1 15
14	SDI V1 11	GND	SDI V1 12
13	SDI V1 8	SDI V1 9	SDI V1 10
12	SDI V1 6	GND	SDI V1 7
11	SDI V1 3	SDI V1 4	SDI V1 5
10	SDI V1 0	SDI V1 1	SDI V1 2
9	GND	GND	GND
8	SDI V2 13	SDI V2 14	SDI V2 15
7	SDI V2 11	GND	SDI V2 12
6	SDI V2 8	SDI V2 9	SDI V2 10
5	SDI V2 6	GND	SDI V2 7
4	SDI V2 3	SDI V2 4	SDI V2 5
3	SDI V2 0	SDI V2 1	SDI V2 6
2	GND	GND	GND
1	UP13.5CK (-)	GND	UP13.5CK (+)

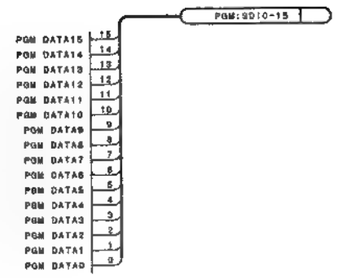

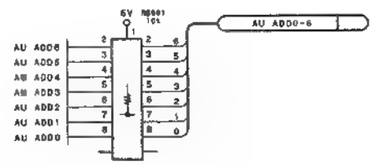

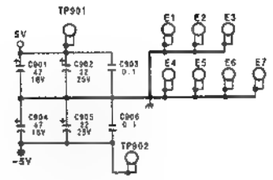

CN22

CN22 (TO IO-119)

	A	B	C
1	CK_13.5 (+)	V2:REF_SW	V1:REF_SW
2	HD_SW	VD_SW	FD_SW
3	GND	GND	CHNG_VD
4	SW:DA	SW:CS	SW:CK
5	MIX:DA	MIX:CS	MIX:CK
6	GND	GND	GND
7	5V	GND	GND
8	5V	5V	5V
9	LED_PAL	LED_NT	5V
10	AU ADD5	AU ADD6	AU ADD7
11	AU ADD2	AU ADD3	AU ADD4
12	NC3	AU ADD0	AU ADD1
13	AU DATA5	AU DATA6	AU DATA7
14	AU DATA2	AU DATA3	AU DATA4
15	NC4	AU DATA0	AU DATA1
16	AUX:AU_CS	P2:AU_CS	P1:AU_CS
17	ERR-AU_CS	PGM:AU_CS	R:AU_CS
18	NC5	WR	RD
19	SD	SA	CKD
20	AUX_CS	P2_CS	P1_CS
21	NC6	PGM_CS	R_CS
22	NC11	GND	NC10
23	SDI:FD OUT	GND	NC12
24	148G	GND	SDI:FD IN
25	148E	GND	148F
26	148C	GND	148D
27	BOARD ON	ADJ_TN	525/625
28	148A	148B	U:RST
29	GND	NC20	SDI_CLK
30	GND	GND	GND
31	-5V	GND	GND
32	-5V	-5V	-5V

CN24

CN24 (TO IO-119)

	A	B	C
32	CK_13.5 (+)	V2:REF_SW	V1:REF_SW
31	HD_SW	VD_SW	FD_SW
30	GND	GND	CHNG_VD
29	SW:DA	SW:CS	SW:CK
[redacted]	MIX:DA	MIX:CS	MIX:CK
27	GND	GND	GND
26	5V	GND	GND
25	5V	5V	5V
24	LED_PAL	LED_NT	5V
23	AU ADD5	AU ADD6	AU ADD7
22	AU ADD2	AU ADD3	AU ADD4
21	NC3	AU ADD0	AU ADD1
20	AU DATA5	AU DATA6	AU DATA7
19	AU DATA2	AU DATA3	AU DATA4
[redacted]	NC4	AU DATA0	AU DATA1
17	AUX:AU_CS	P2:AU_CS	P1:AU_CS
16	ERR-AU_CS	PGM:AU_CS	R:AU_CS
15	NC5	WR	RD
14	[redacted]	SA	CKD
13	AUX_CS	P2_CS	P1_CS
12	NC6	PGM_CS	R_CS
11	NC11	GND	NC10
10	SDI:FD OUT	GND	NC12
9	148G	GND	SDI:FD IN
8	148E	GND	148F
7	148C	GND	148D
6	BOARD ON	ADJ_TN	525/625
[redacted]	148A	148B	U:RST
4	GND	NC20	SDI_CLK
3	GND	GND	GND
2	-5V	-5V	GND
1	-5V	-5V	-5V

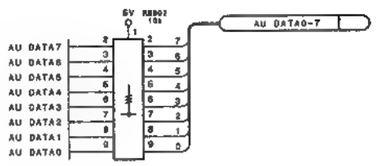

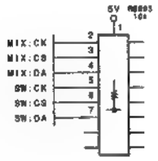

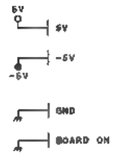

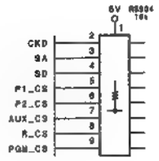

IO-148 (8/8)
PART NO 1-661-796-11
MODEL ESBK-7032
B-ESBK7032-IO148-11

MAIN

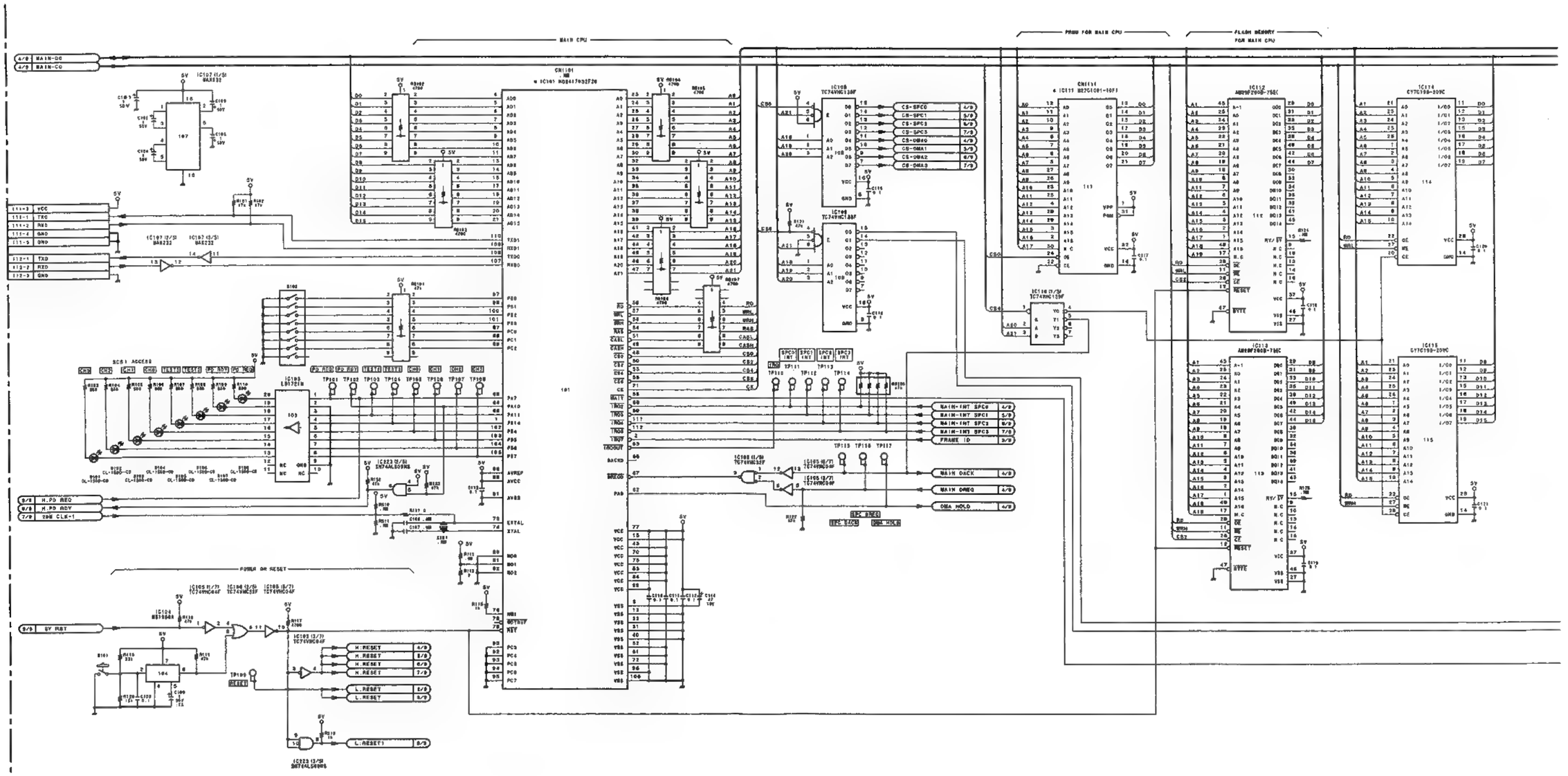

ESBK-7041

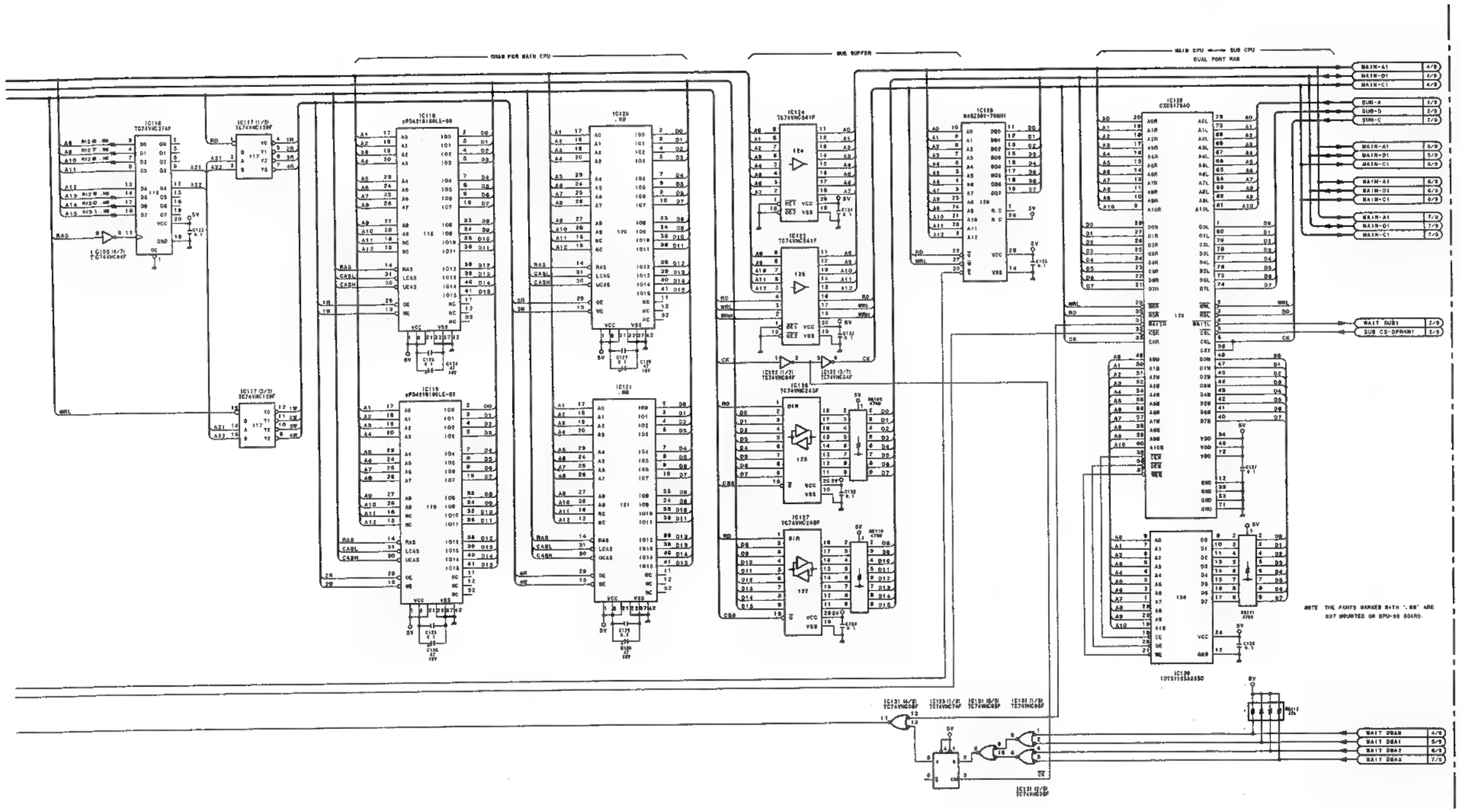

MPU-95 (1/9)
PART NO 1-662-793-11
MODEL ESBK-7041
B-ESBK7041-MPU95-11

SUB

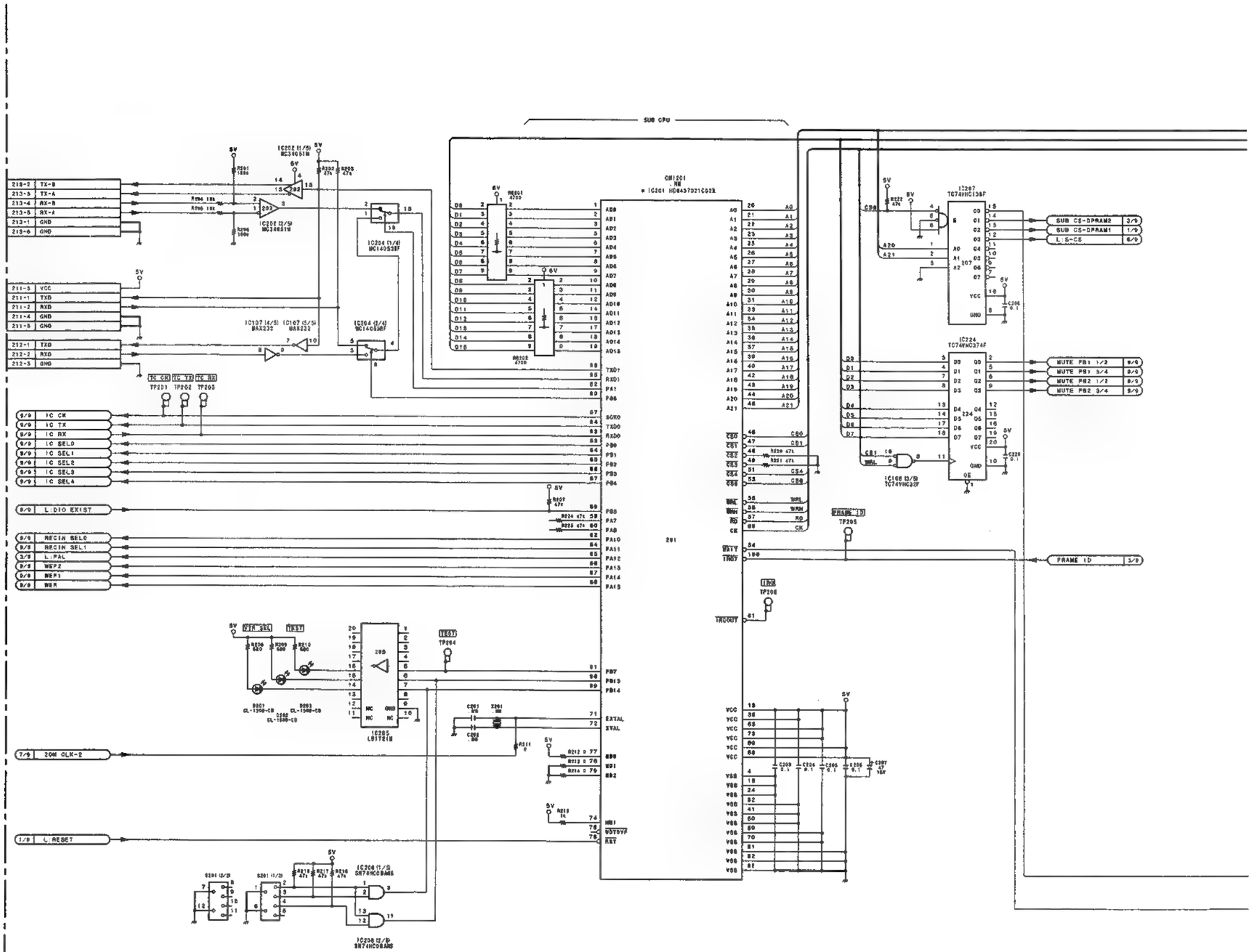

ESBK-7041

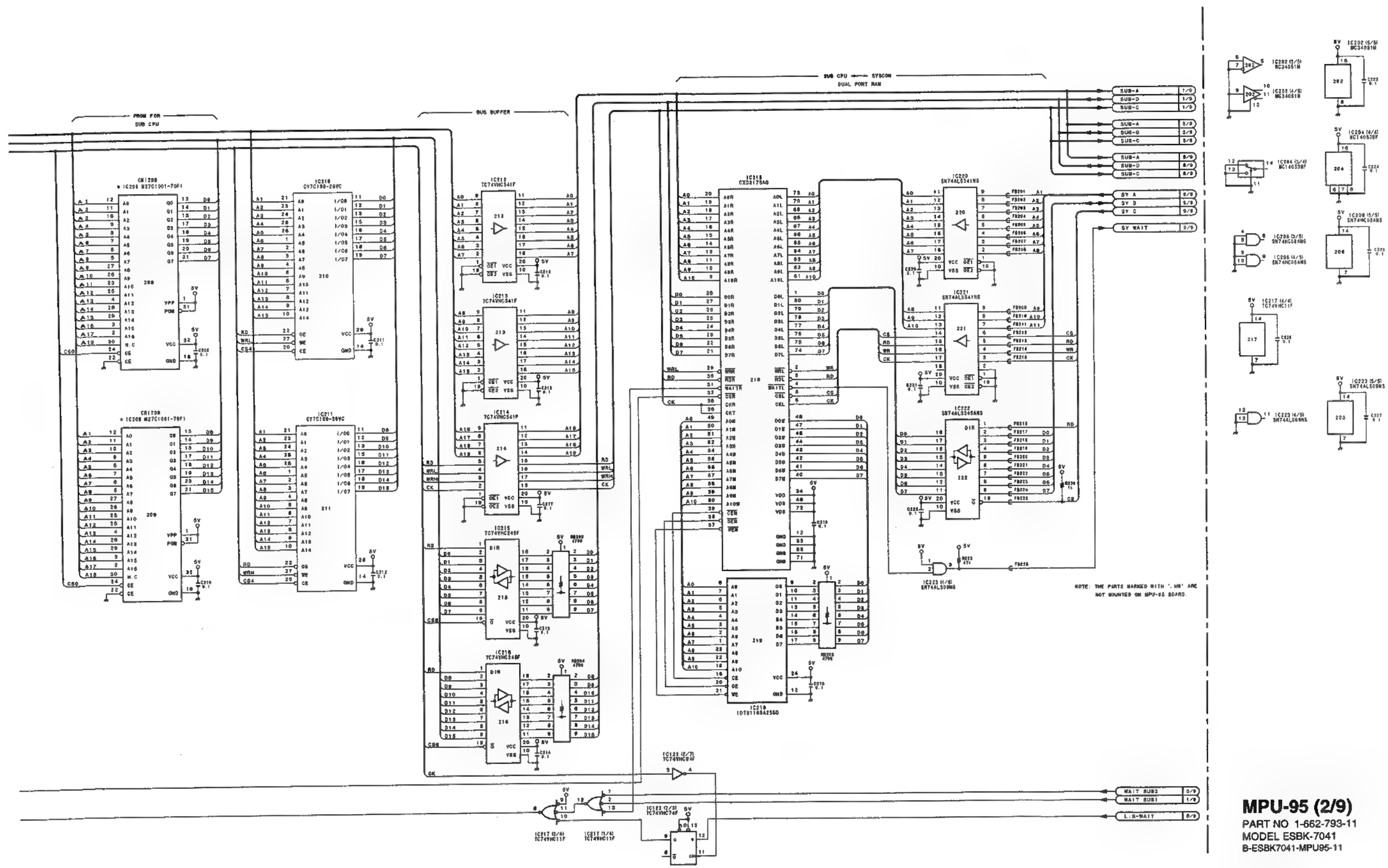

MPU-95 (2/9)
PART NO 1-662-793-11
MODEL ESBK-7041
B-ESBK7041-MPU95-11

BUS

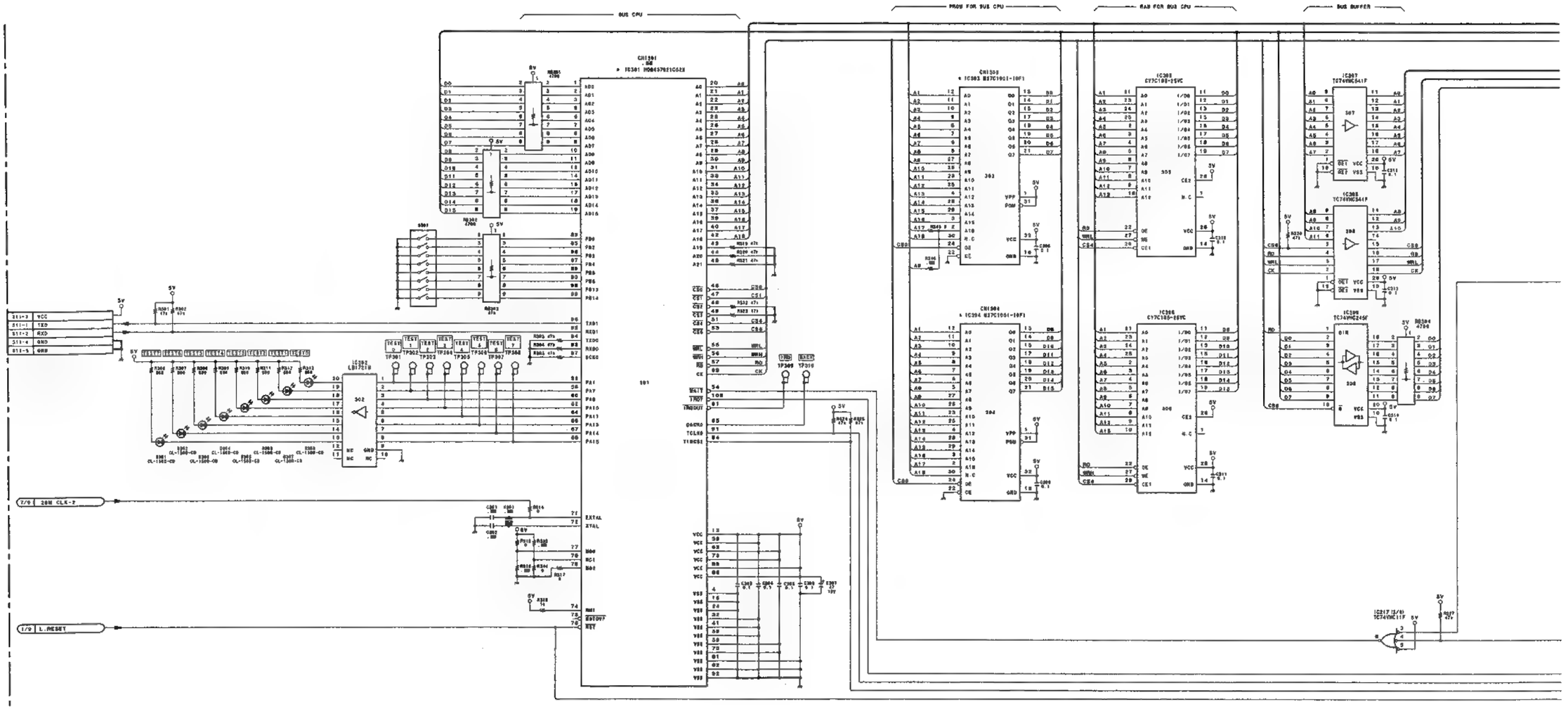
BUS CPU
PROM FOR BUS CPU
RAM FOR BUS CPU
BUS BUFFER
5V
SIO-3 VCC
SIO-1 TXD
SIO-2 RXD
SIO-4 GND
SIO-5 GND
I/O 20M CLK-2
I/O L.RESET
TEST 0
TEST 1
TEST 2
TEST 3
TEST 4
TEST 5
TEST 6
TEST 7
TP301
TP302
TP303
TP304
TP305
TP306
TP307
TP308
TP309
TP310
IC302
LB7210
IC303
M37C1001-10F1
IC304
M37C1001-10F1
IC305
CY7C109-15VC
IC306
CY7C109-85VC
IC307
TC74VHC541F
IC308
TC74VHC541F
IC309
TC74VHC245F
IC310
TC74VHC11F
EXTAL
XTAL
RST
RESET
NMI
HOLDOFF
HLT

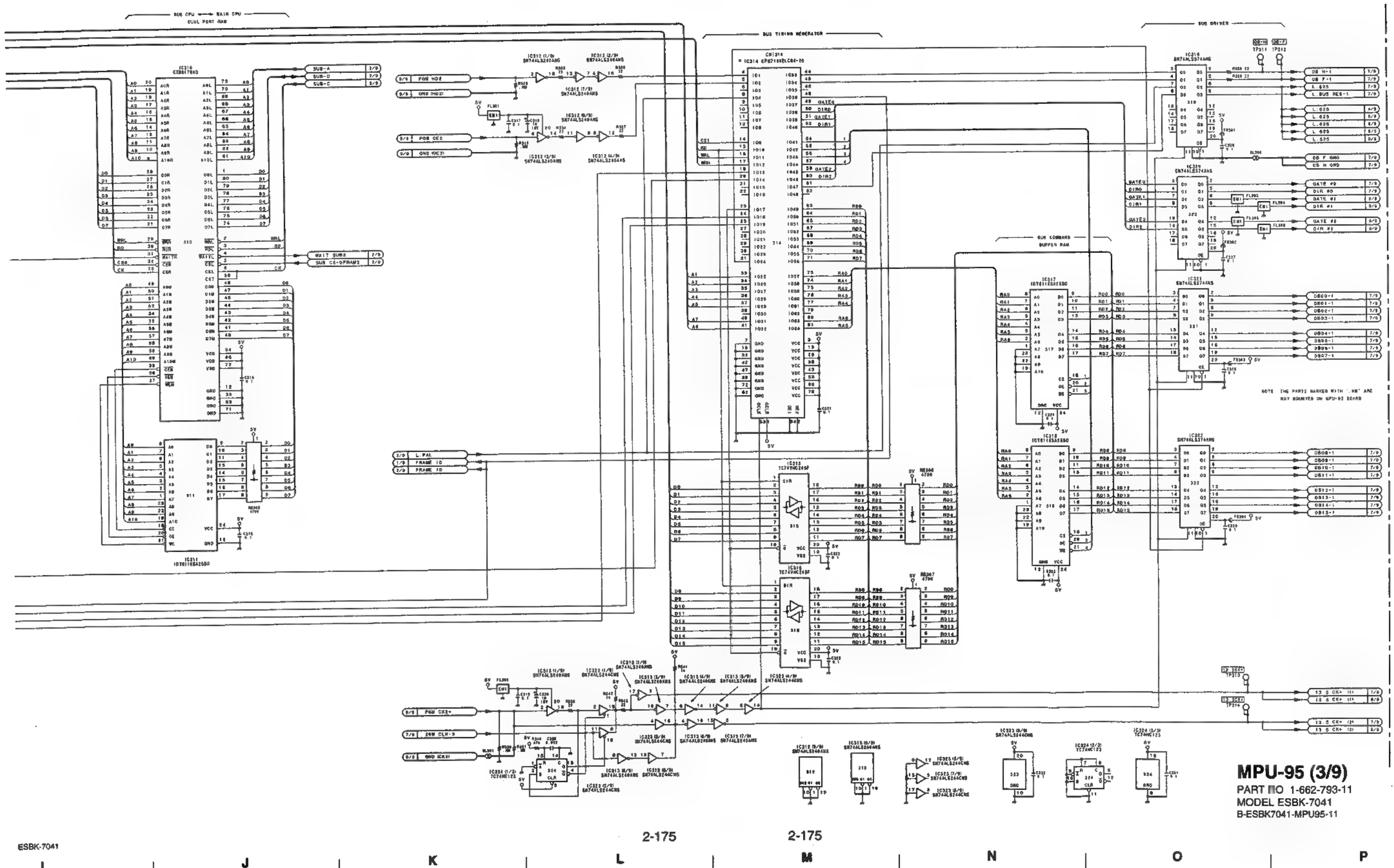

MPU-95 (3/9)
PART NO 1-662-793-11
MODEL ESBK-7041
B-ESBK7041-MPU95-11

SCSI #0

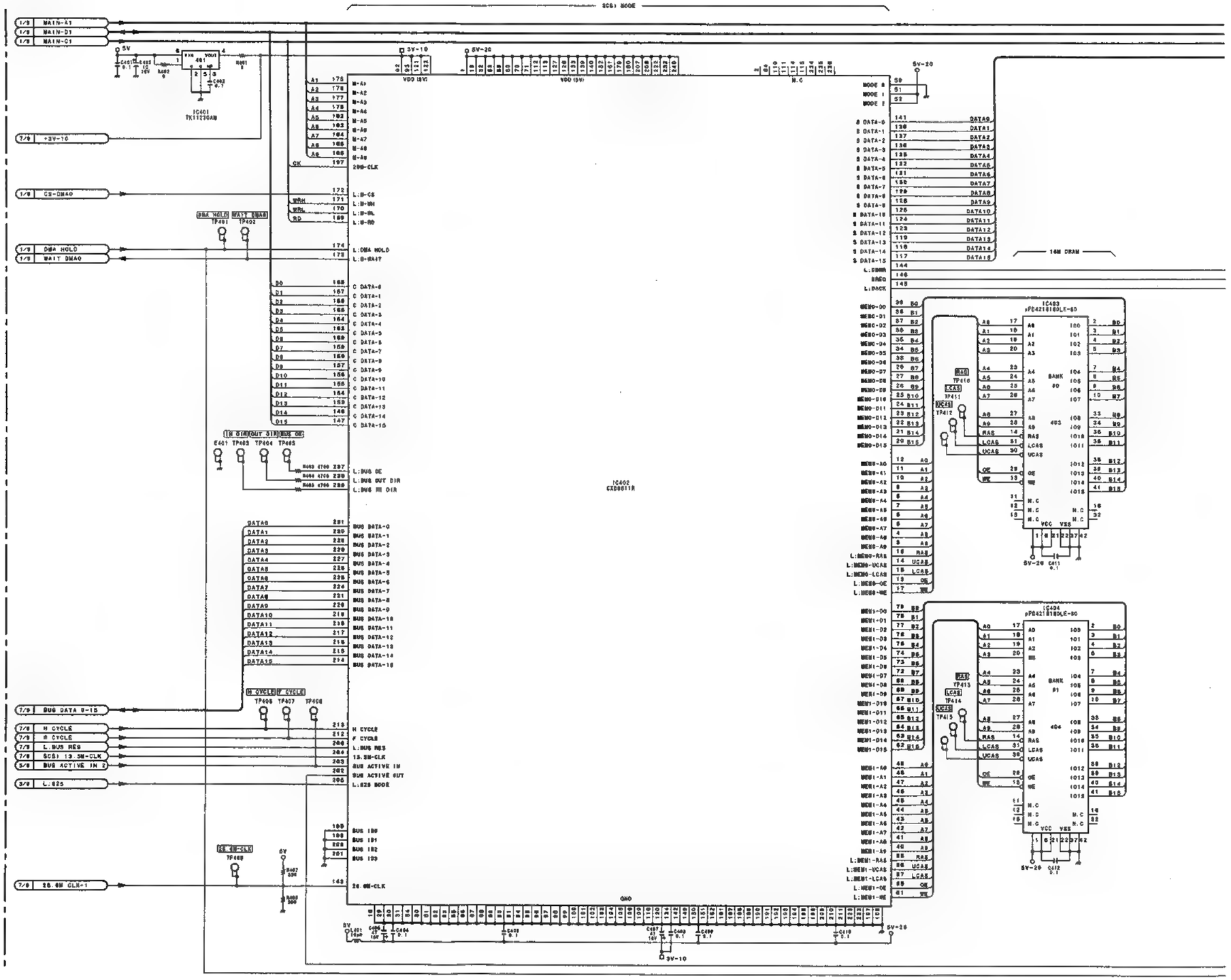

2-176 2-176

ESBK-7041

A B C D E F G H

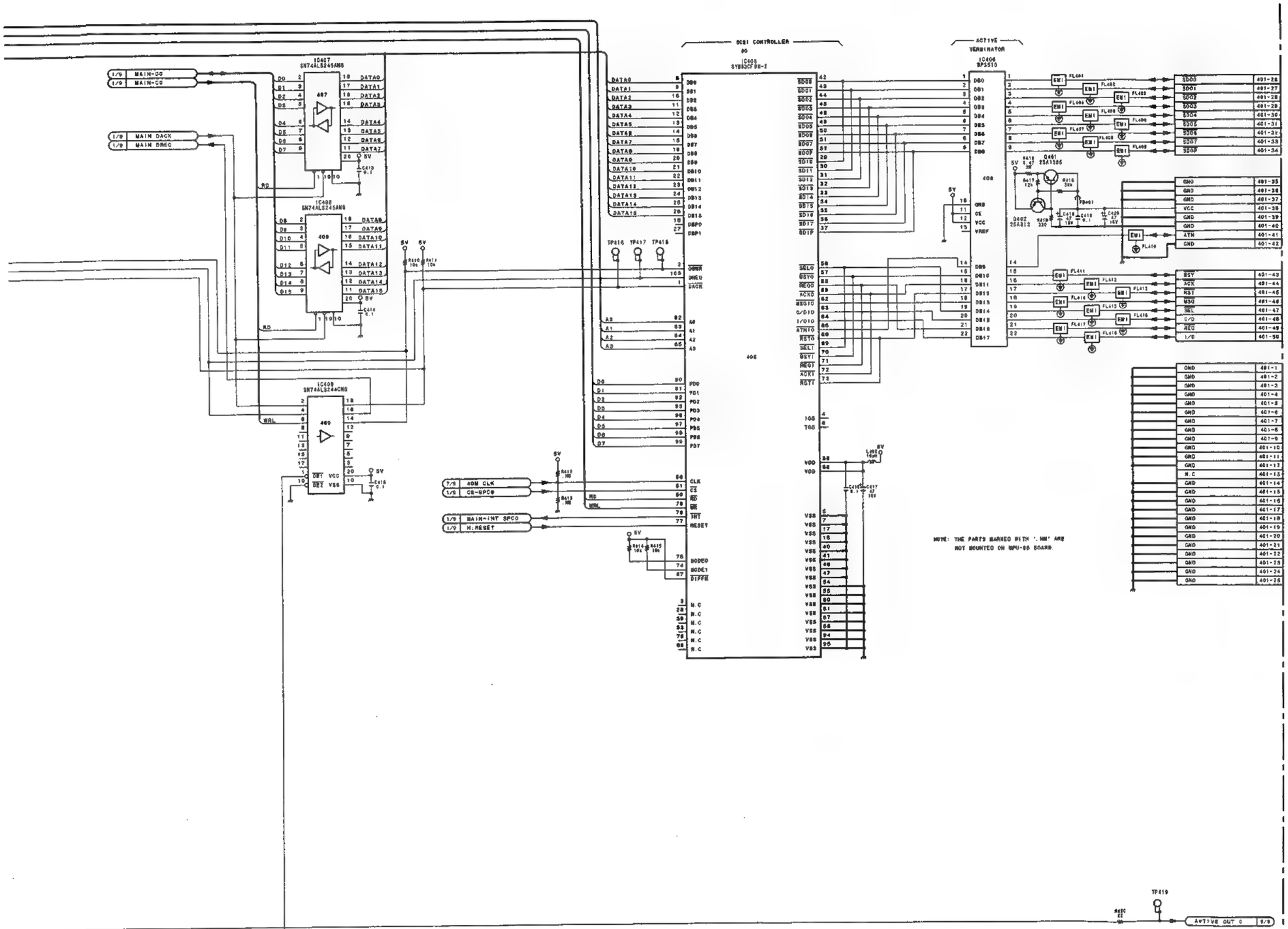

MPU-95 (4/9)
PART NO 1-662-793-11
MODEL ESBK-7041
B-ESBK7041-MPU95-11

SCSI #1

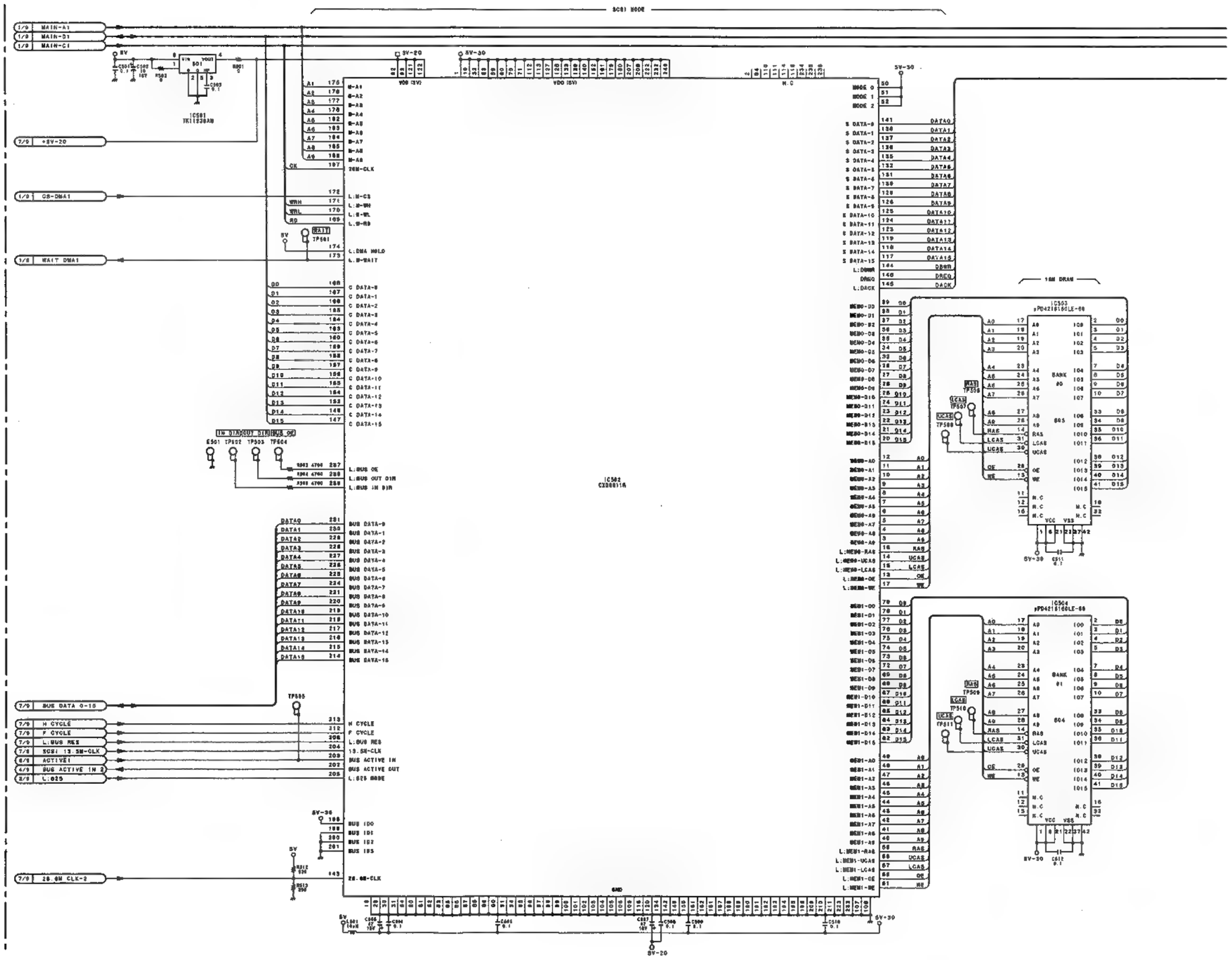

2-178 2-178

ESBK-7041

A B C D E F G H

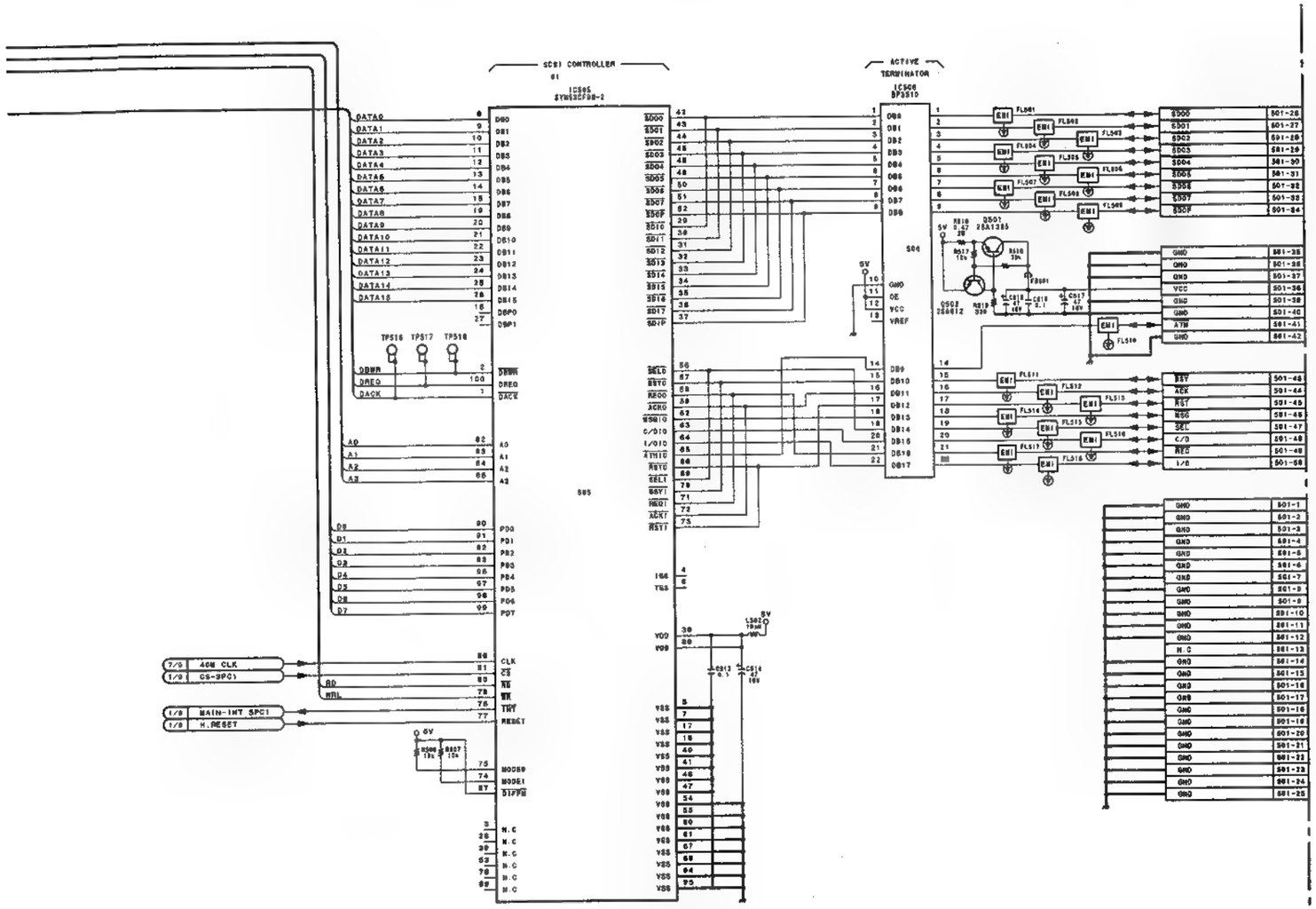

MPU-95 (5/9)
PART NO 1-662-793-11
MODEL ESBK-7041
B-ESBK7041-MPU95-11

SCSI #2

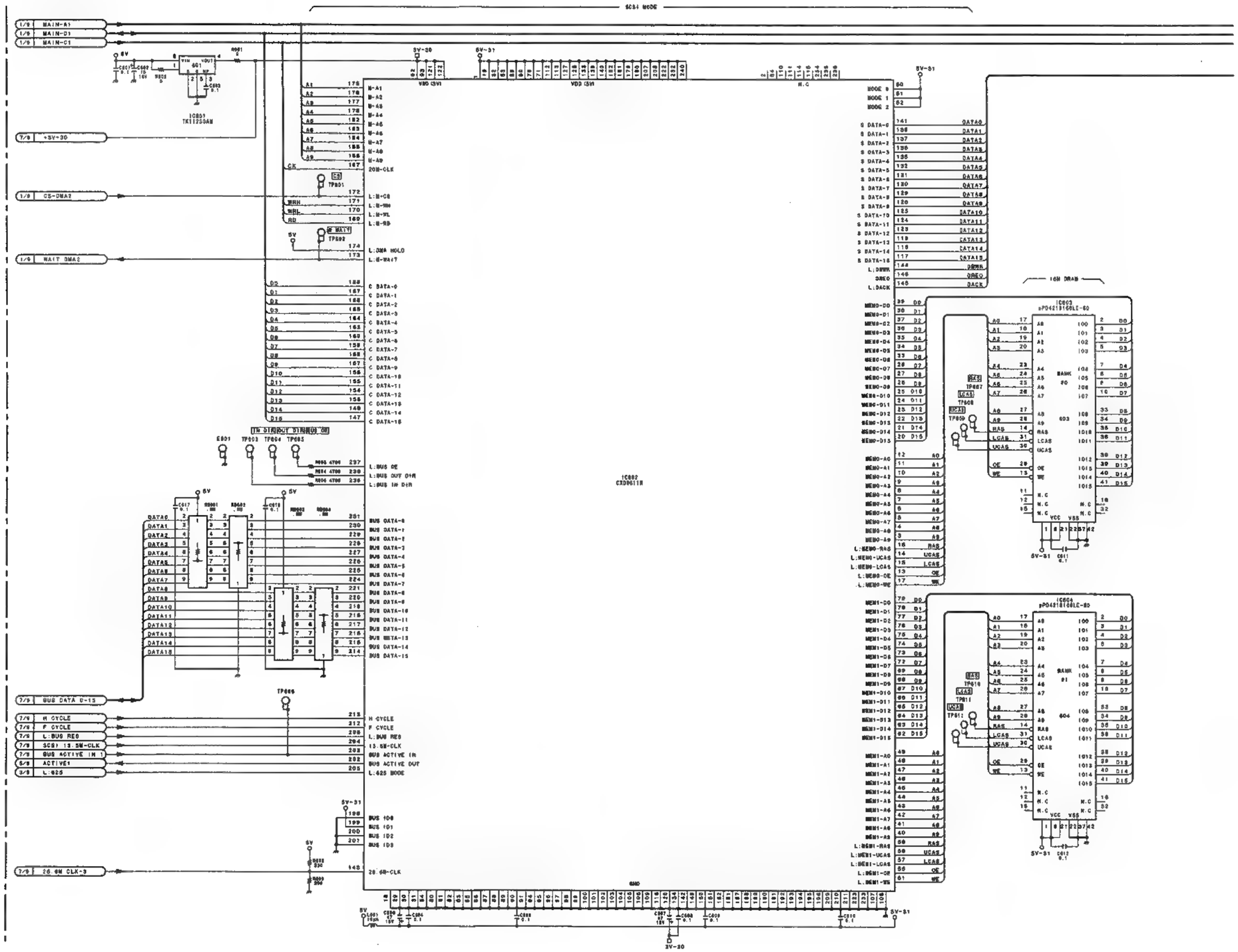

2-180 2-180

ESBK-7041

A B C D E F G H

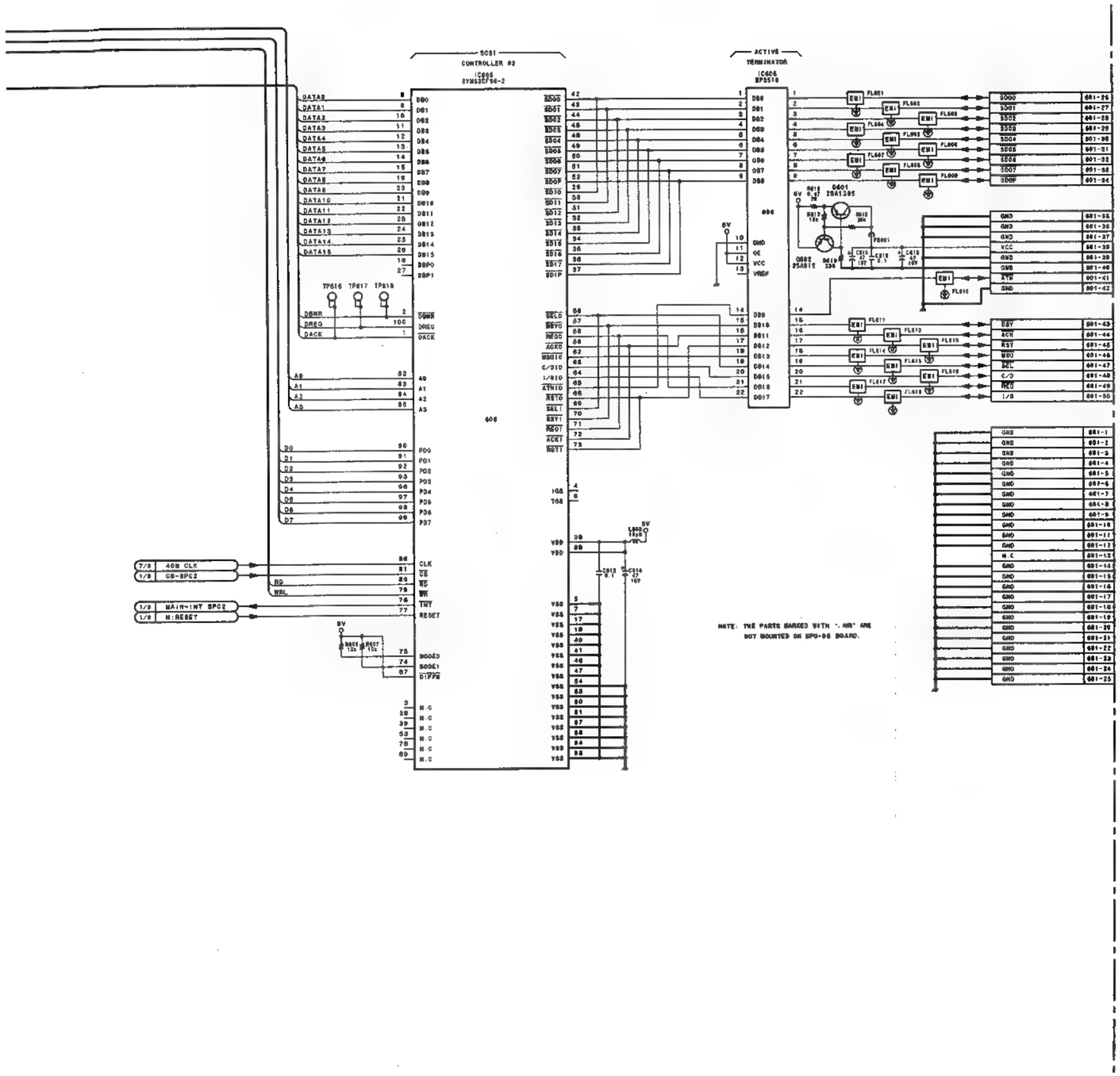

MPU-95 (6/9)
PART NO 1-662-793-11
MODEL ESBK-7041
B-ESBK7041-MPU95-11

SCSI #3

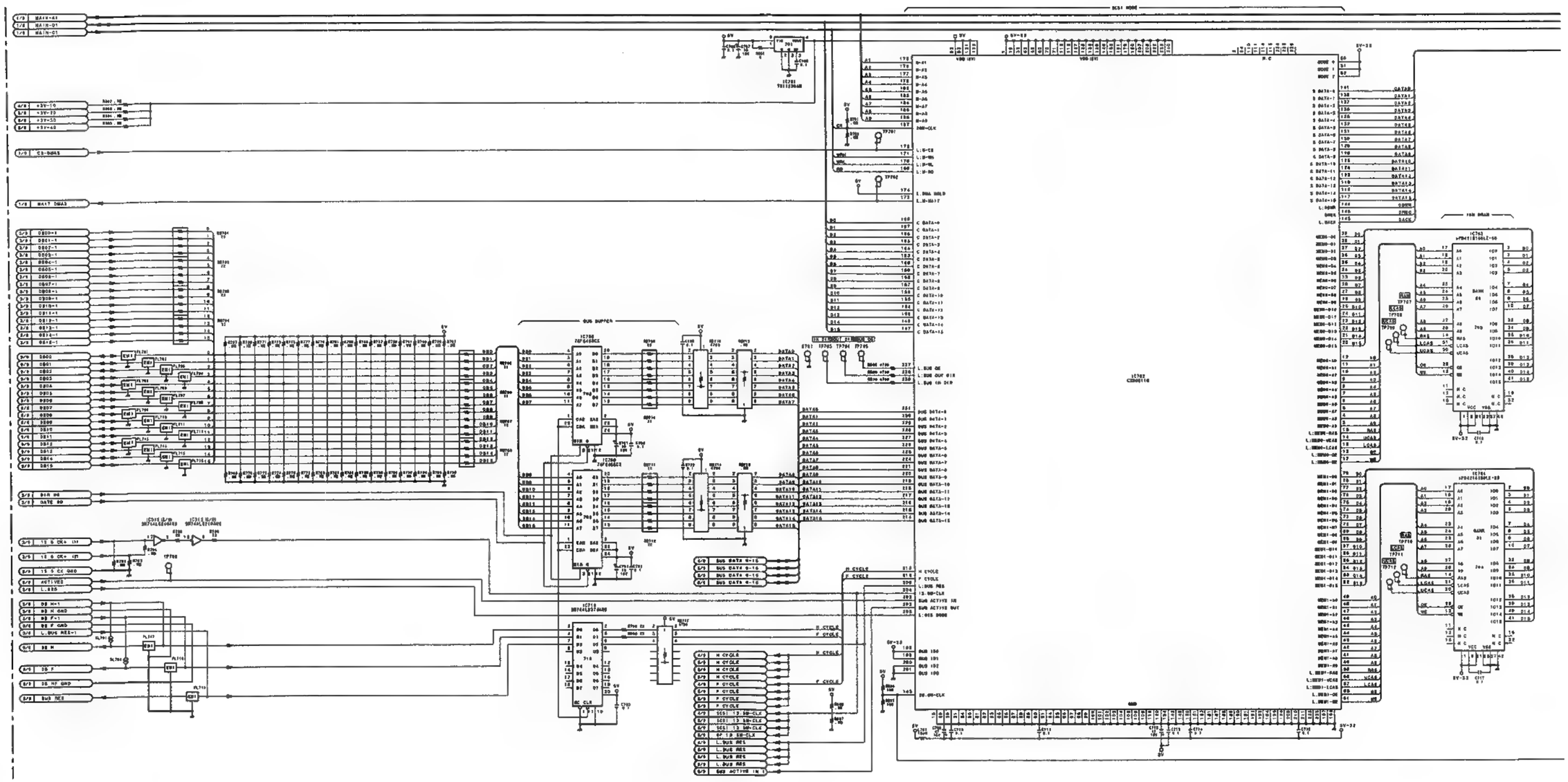

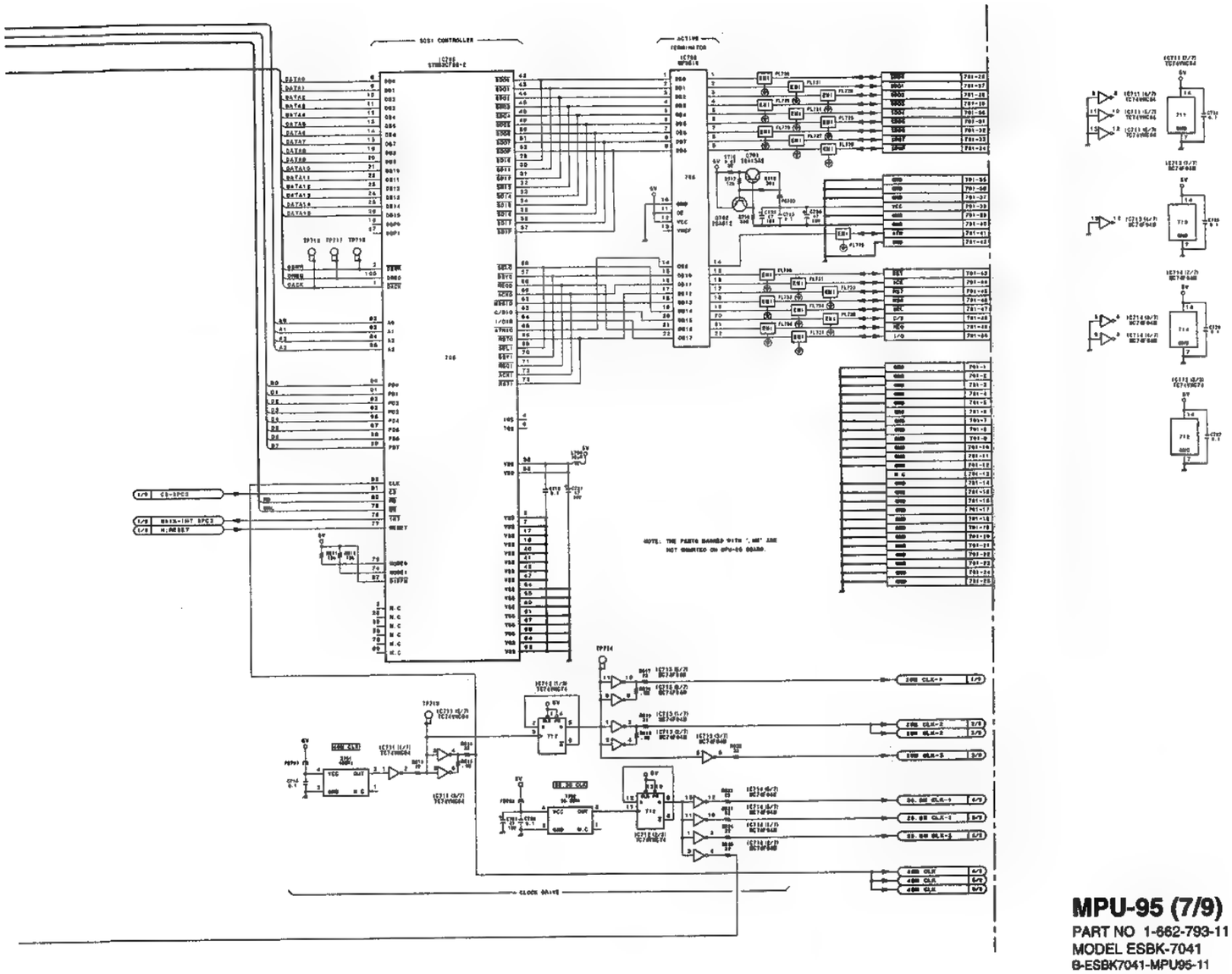

MPU-95 (7/9)
PART NO 1-662-793-11
MODEL ESBK-7041
B-ESBK7041-MPU95-11

DP BUF

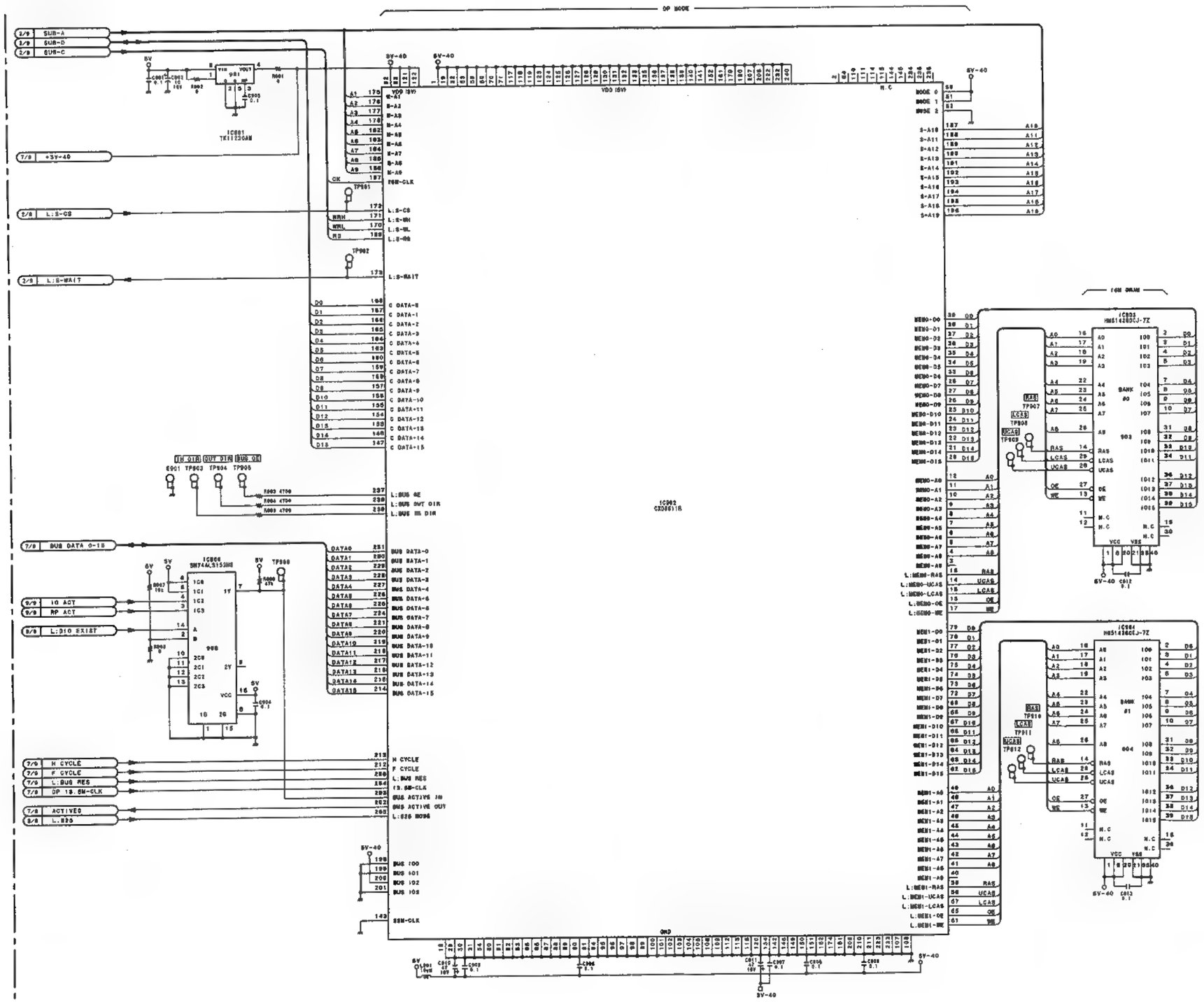

MPU-95 (8/9)
PART NO 1-662-793-11
MODEL ESBK-7041
B-ESBK7041-MPU95-11

CONNECTOR

CN201

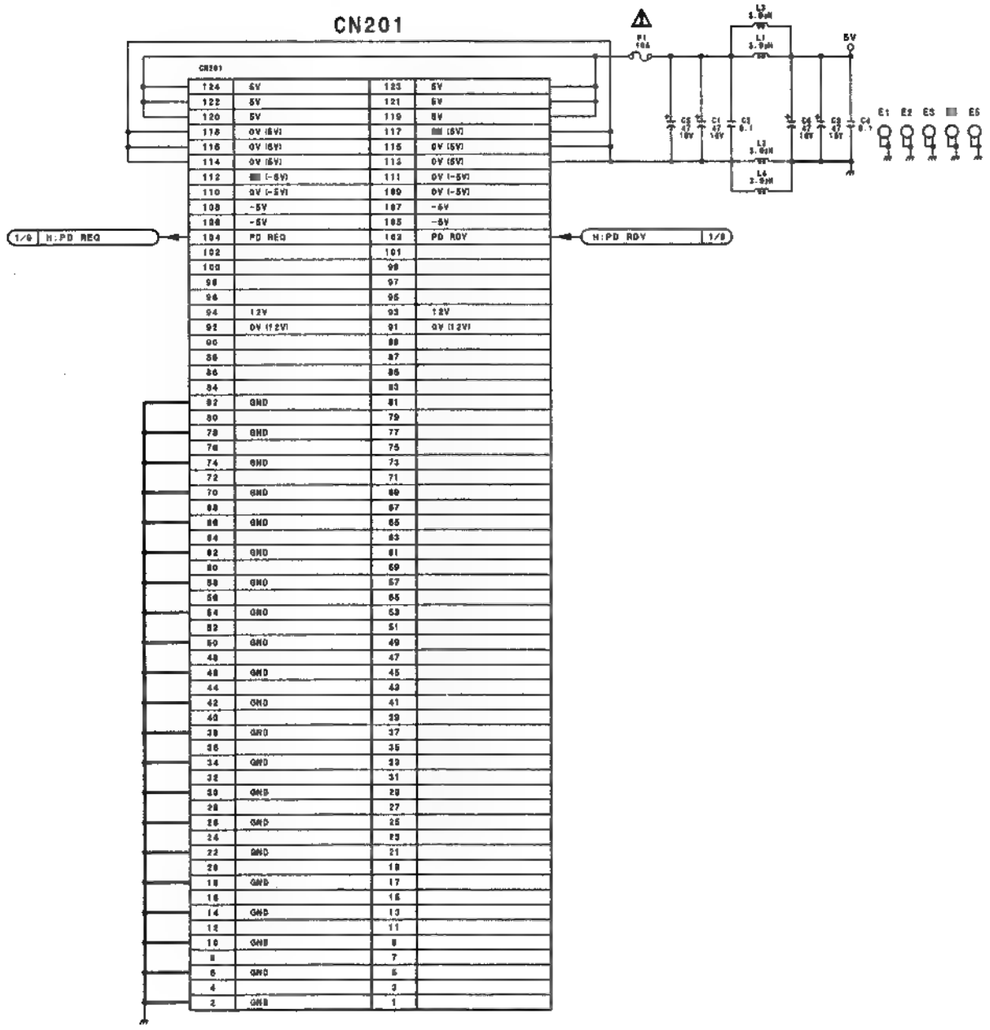

CN202

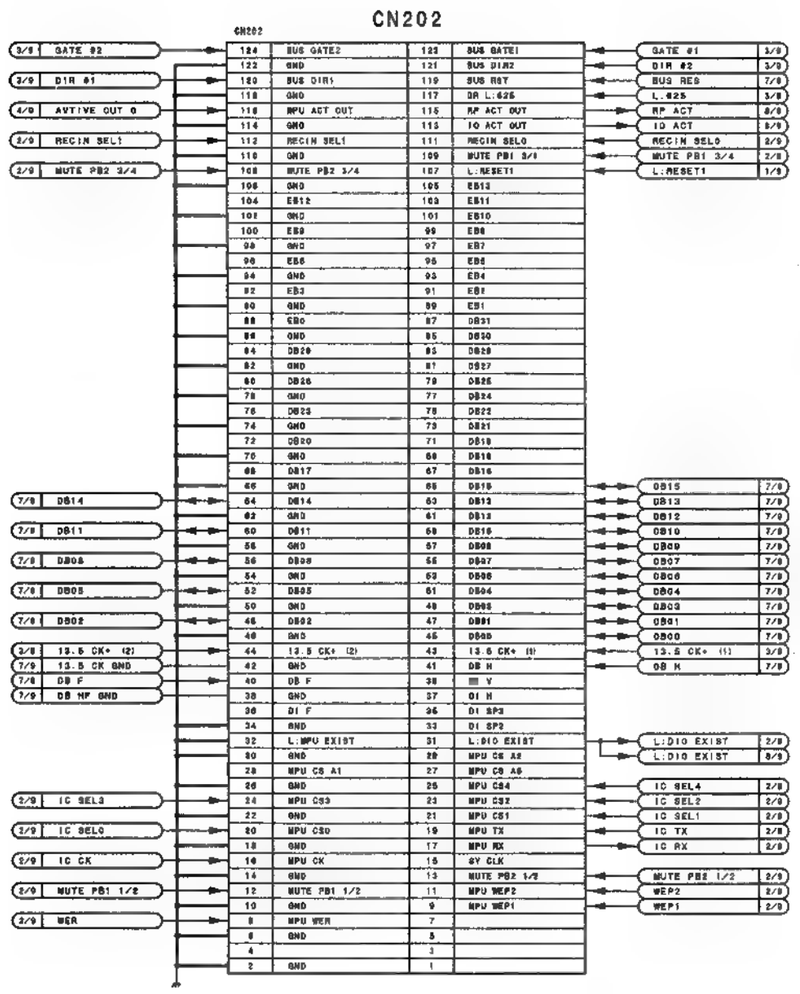

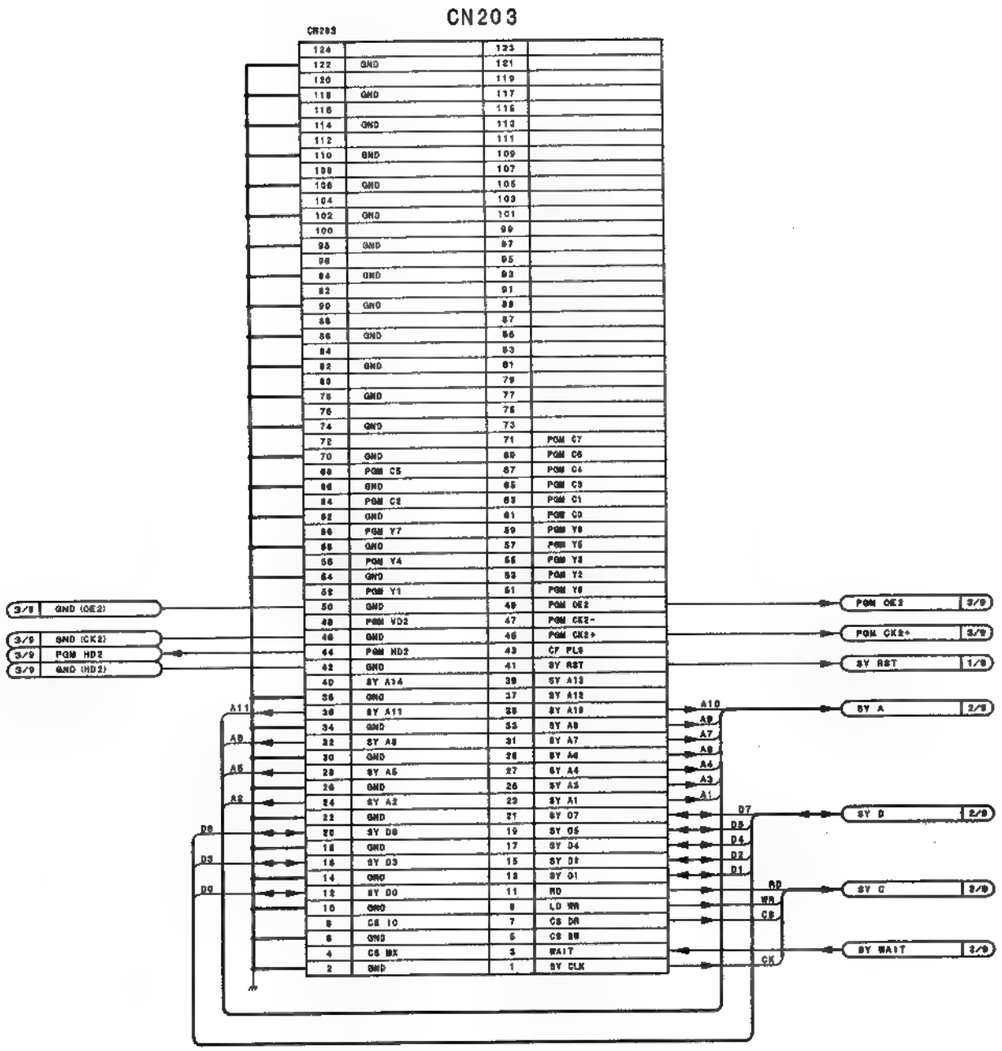

MPU-95 (9/9)

PART NO 1-662-793-11
MODEL ESBK-7041
B-ESBK7041-MPU95-11

AU PB1 1/2

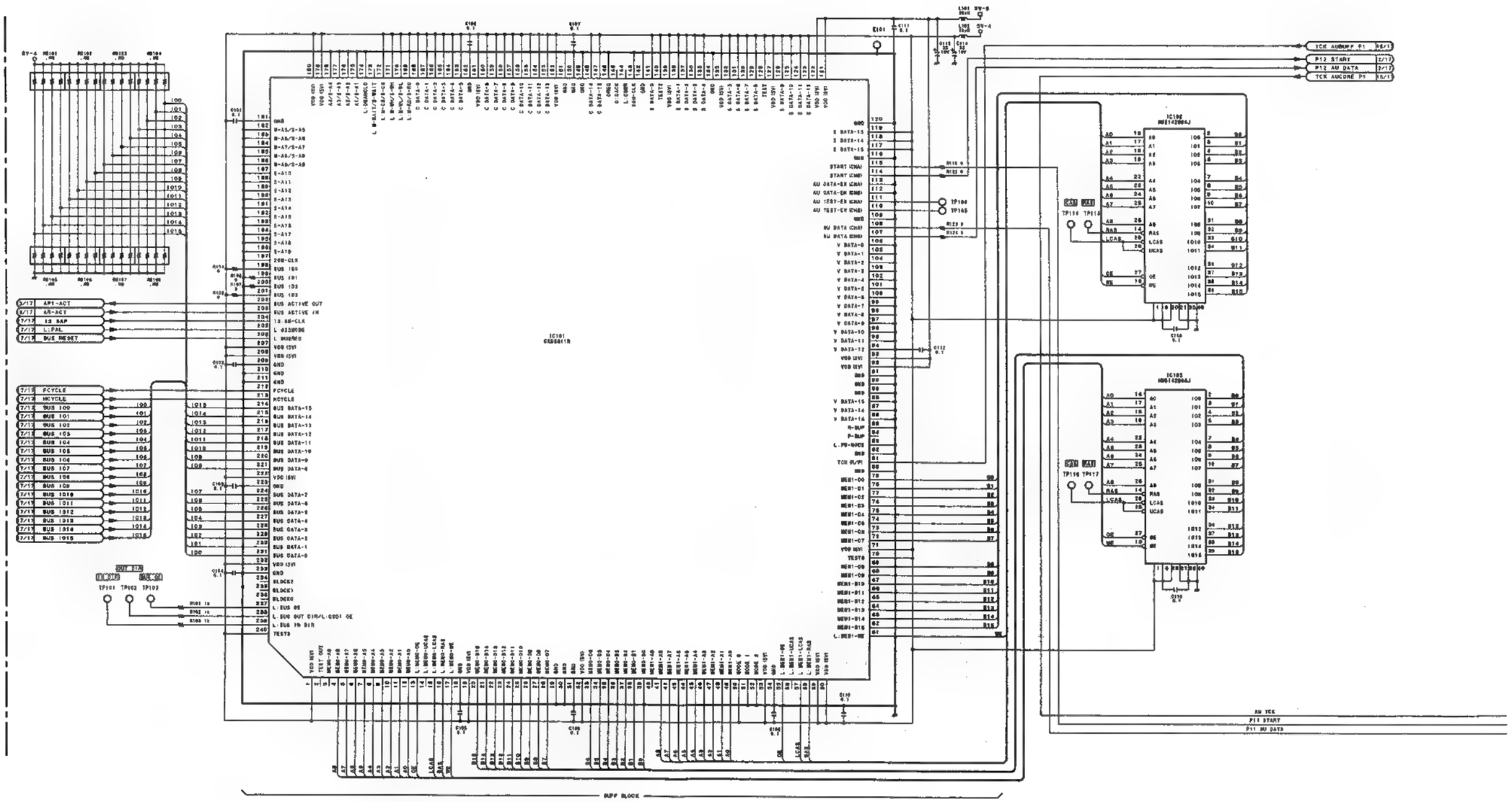

ESBK-7041

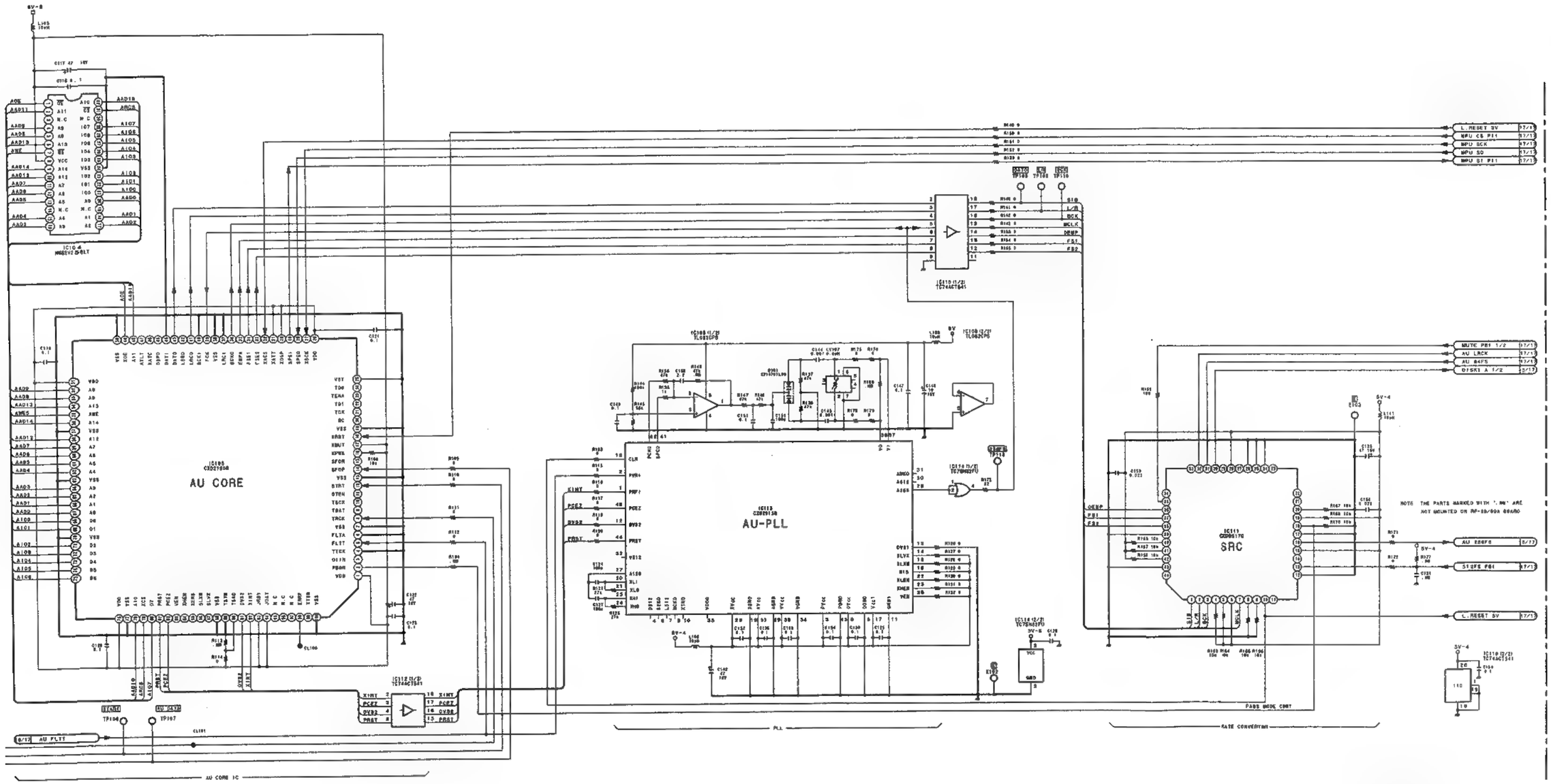

RP-89/89A (1/17)
PART NO 1-662-794-11
MODEL ESBK-7041
8-ESBK7041-RP89-11

AU PB1 3/4

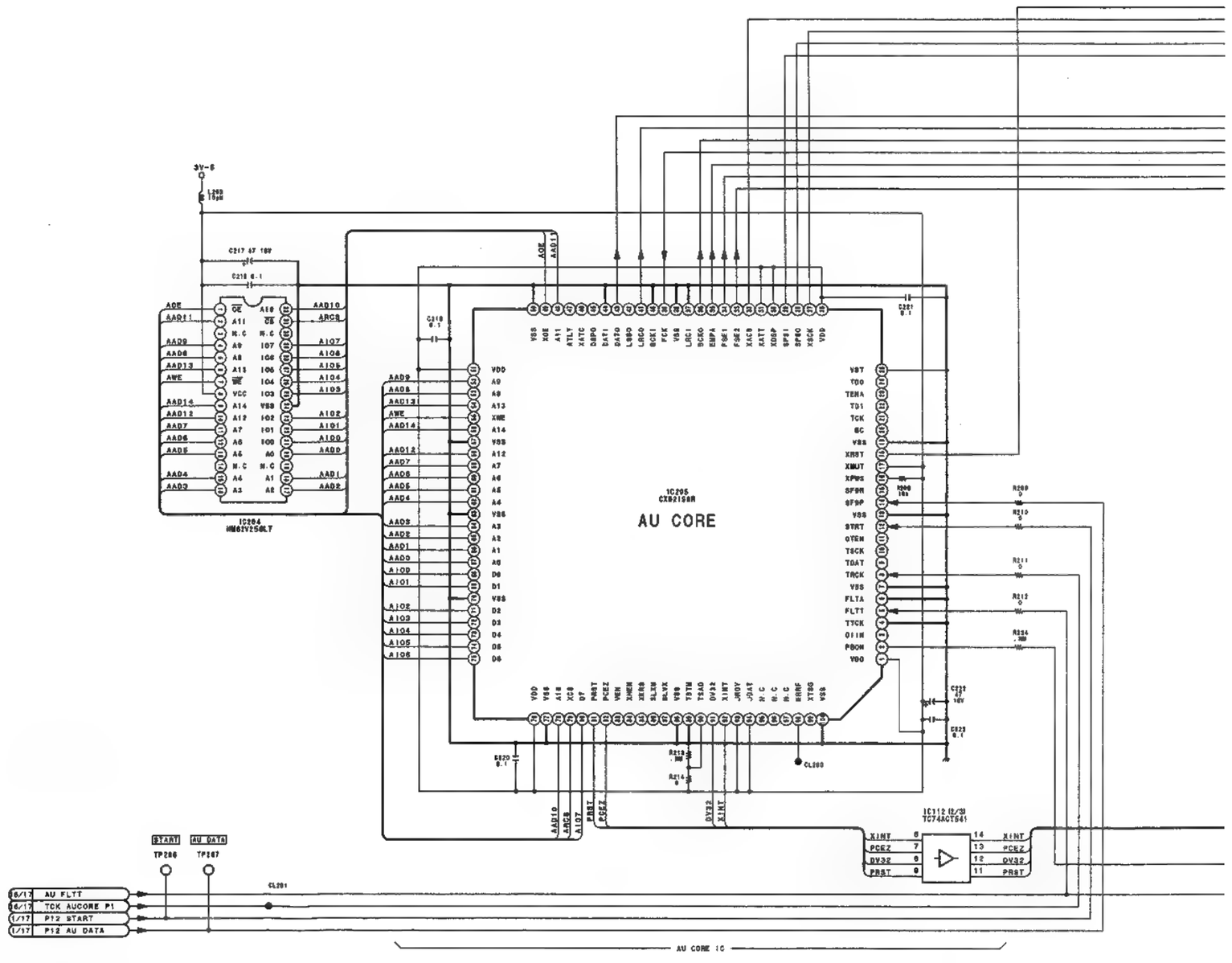

ESBK-7041

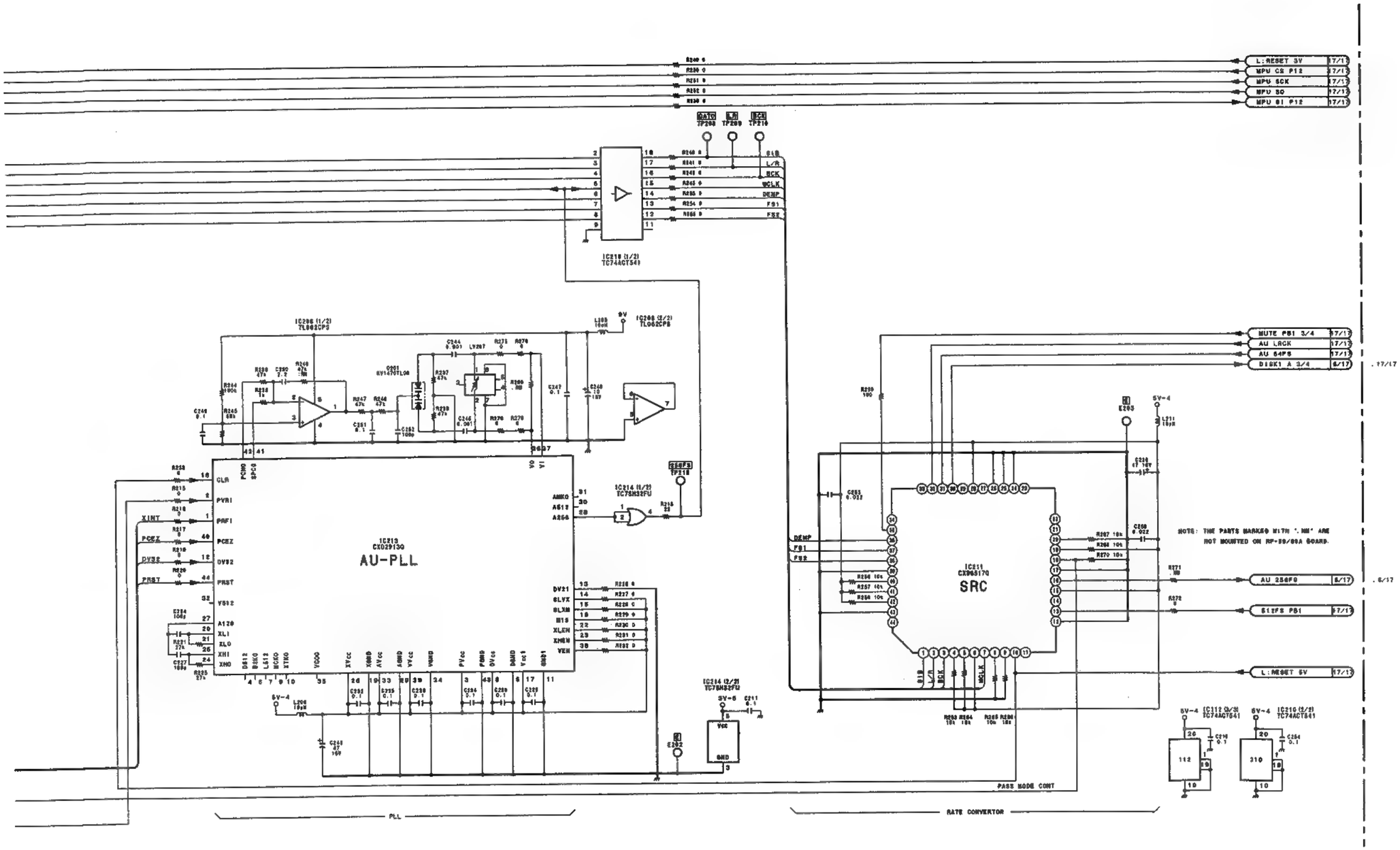

RP-89/89A (2/17)
PART NO 1-662-794-11
MODEL ESBK-7041
B-ESBK7041-RP89-11

AU PB2 1/2

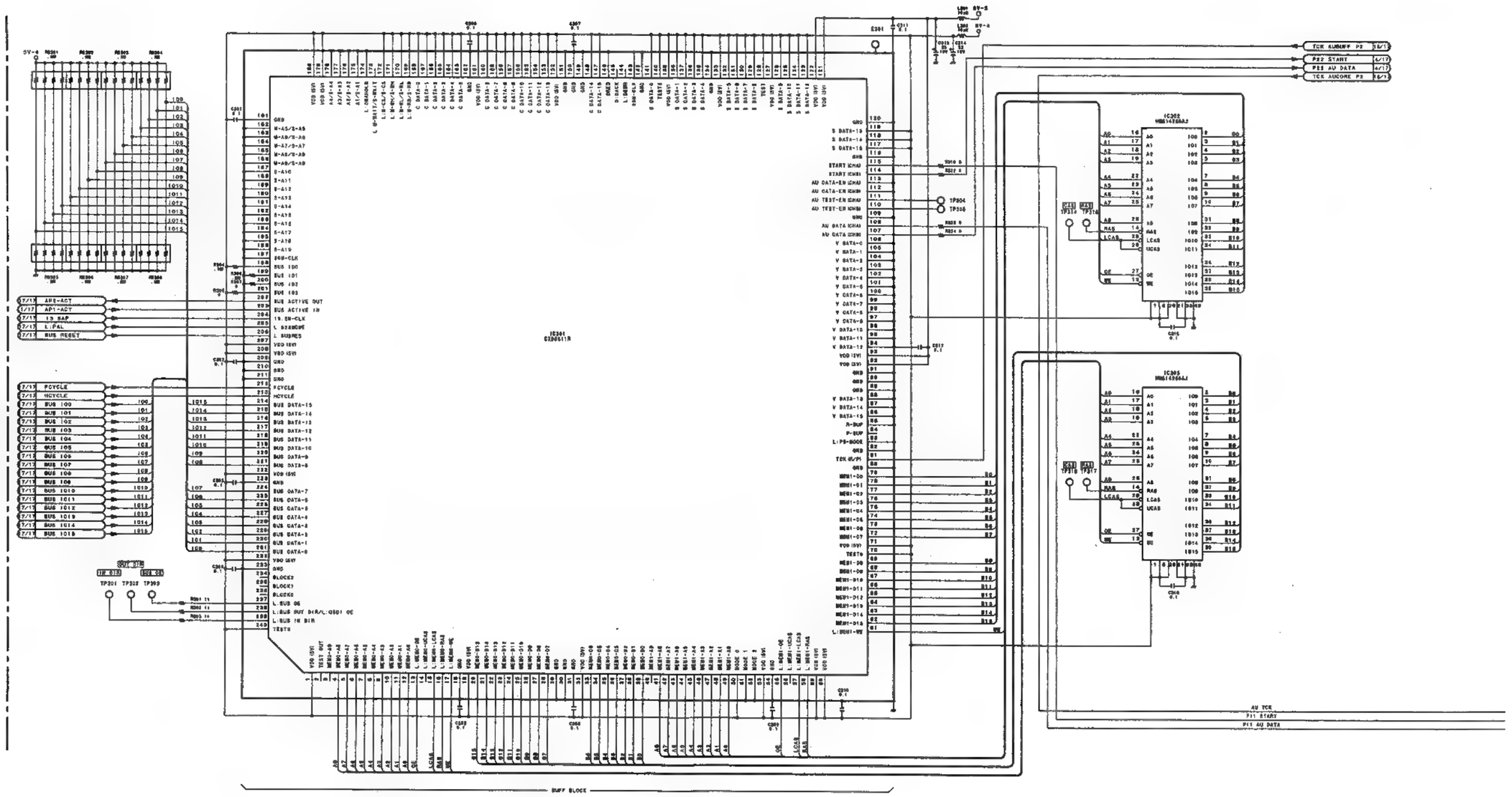

ESBK-7041

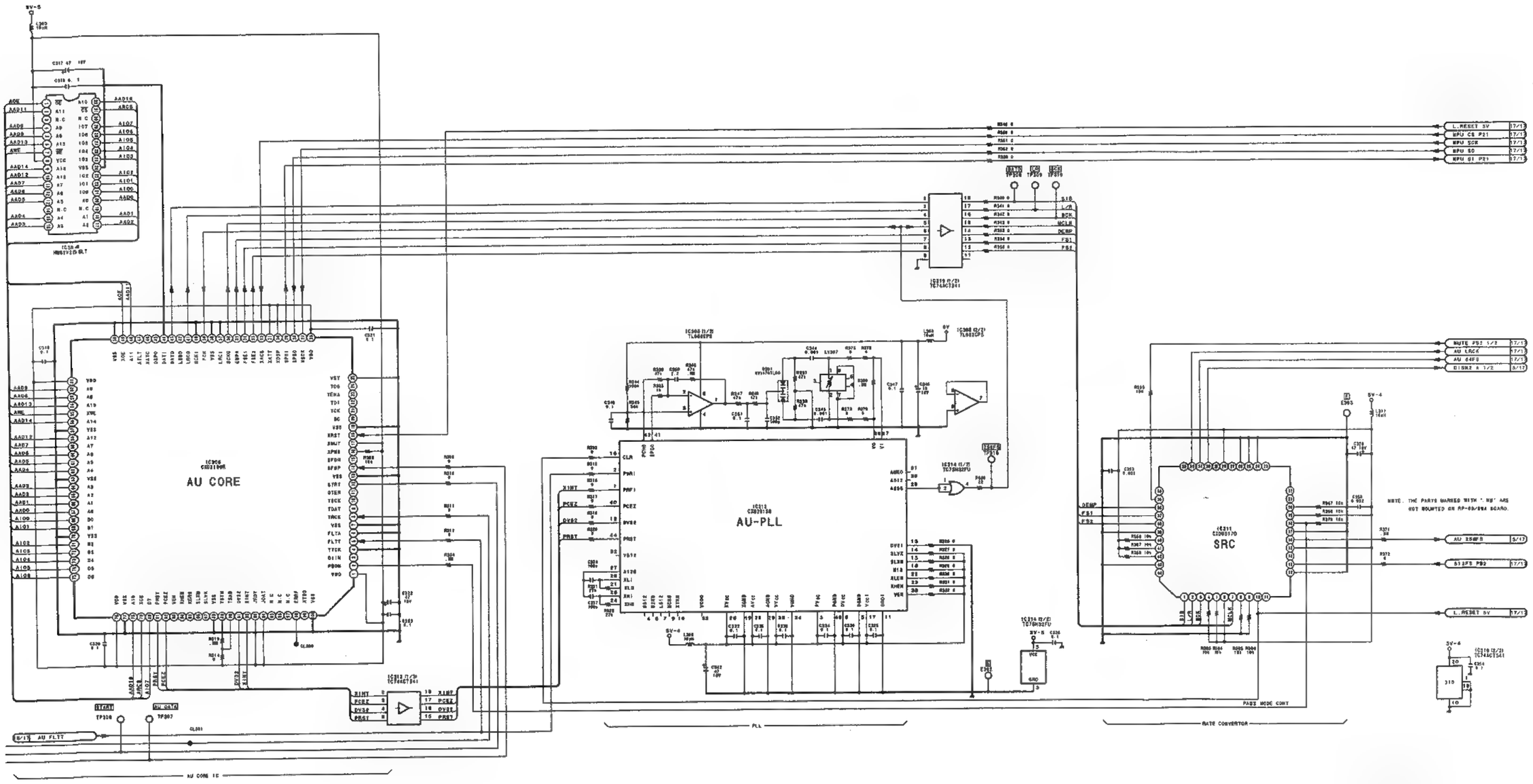

RP-89/89A (3/17)
PART NO 1-662-794-11
MODEL ESBK-7041
B-ESBK7041-RP89-11

AU PB2 3/4

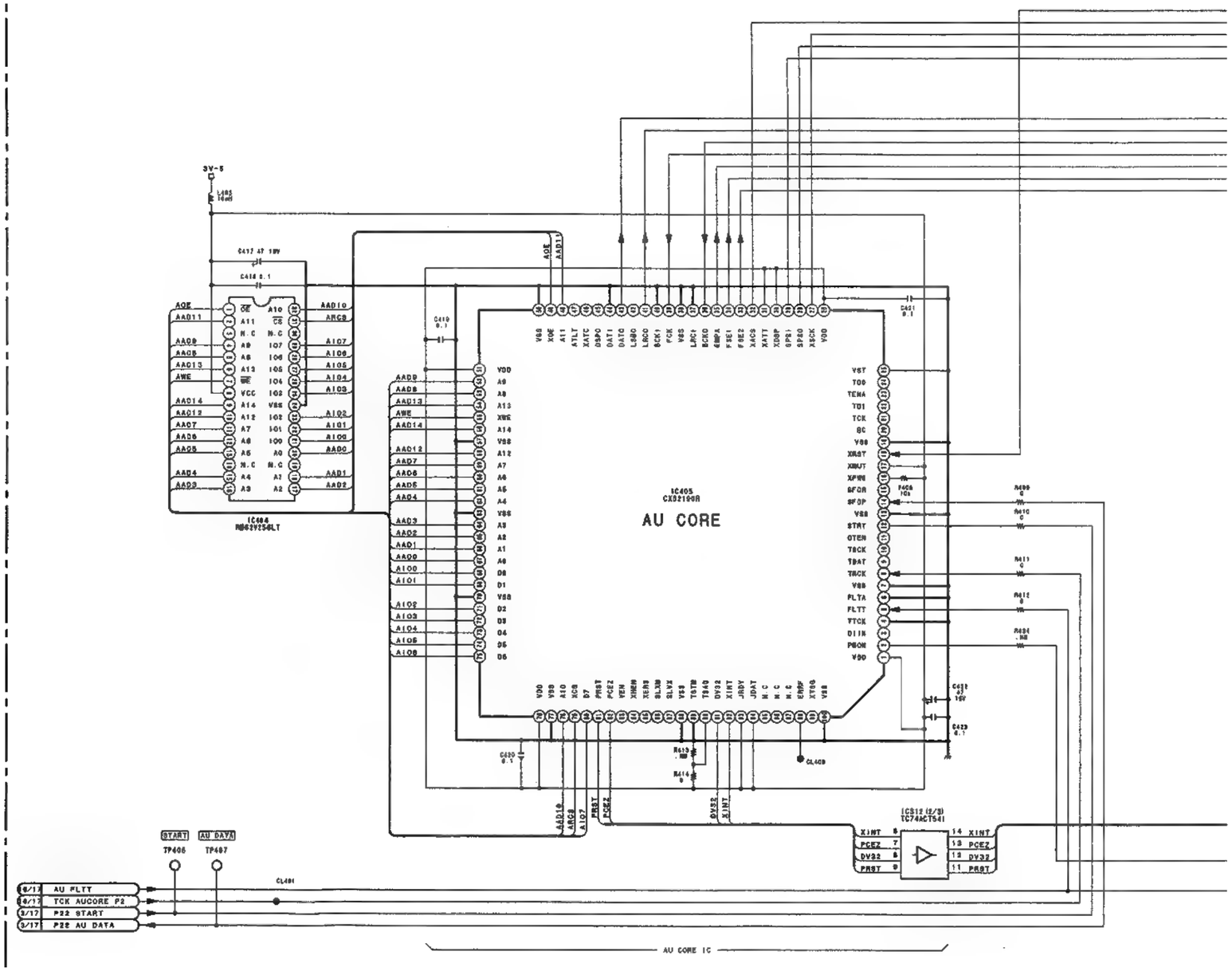
3V-5
IC405
CX92109R
AU CORE
IC404
RB63V256LT
AQE
AA011
AA08
AA09
AA013
AWE
AA014
AA012
AA07
AA06
AA05
AA04
AA03
AA00
AA01
AA02
AA010
ARC8
A107
A106
A105
A104
A103
A102
A101
A100
AA09
AA08
AA013
AWE
AA014
AA012
AA07
AA06
AA05
AA04
AA03
AA02
AA01
AA00
A100
A101
A102
A103
A104
A105
A106
VST
TOD
TENA
TDI
TCK
SC
XRST
XMUT
XPWR
SFCR
SFDP
STRT
OTEN
TSCK
TDAT
TACK
FLTA
FLTT
TTCK
DIIN
PWON
TSTB
PRST
PCE2
DV32
XINT
IC512 (2/3)
TC74ACT541
XINT
PCE2
DV32
PRST
START
AU DATA
TP406
TP407
AU FLTT
TCK AUCORE P2
P32 START
P32 AU DATA
AU CORE IC

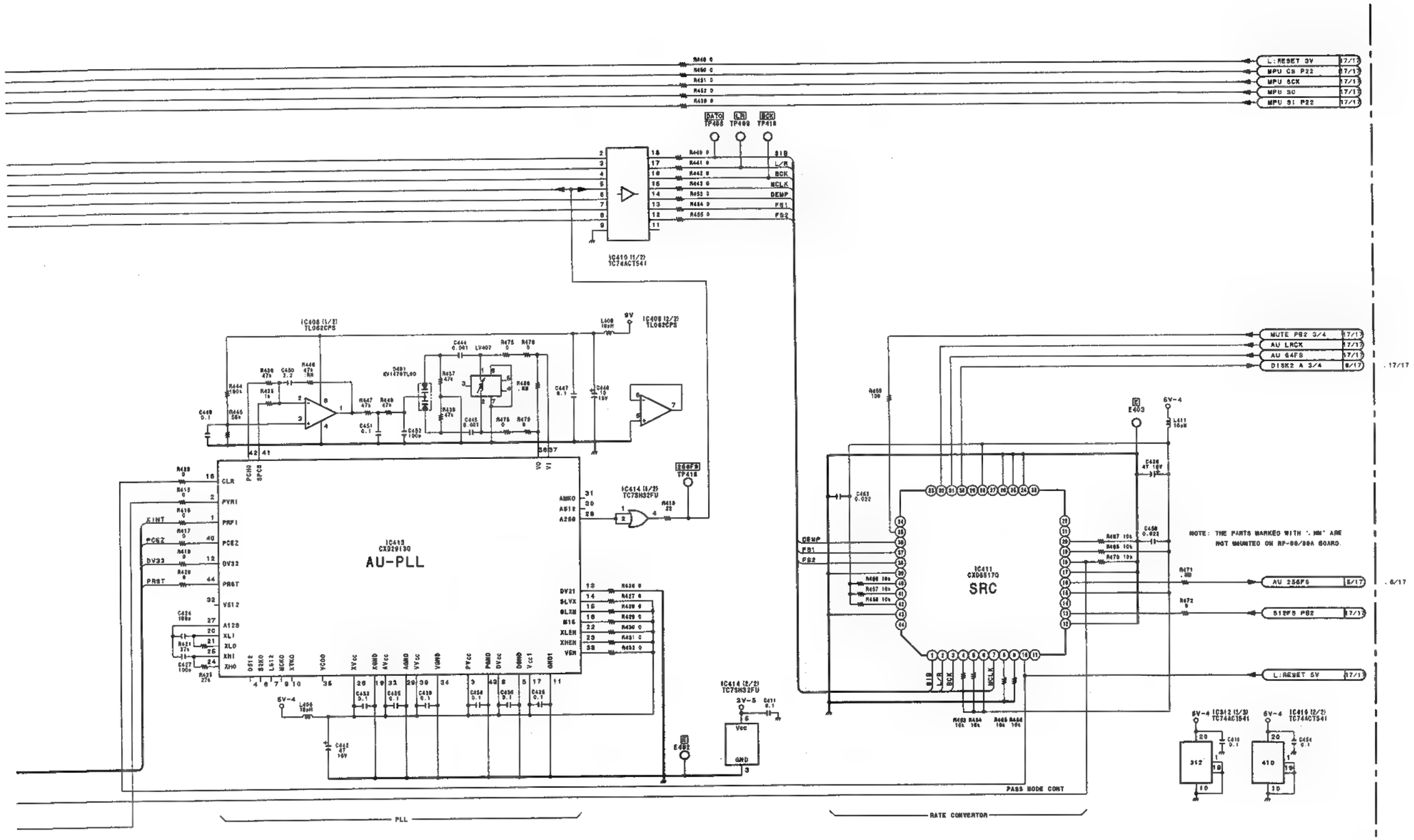

RP-89/89A (4/17)
PART NO 1-662-794-11
MODEL ESBK-7041
B-ESBK7041-RP89-11

AU REC 1/2

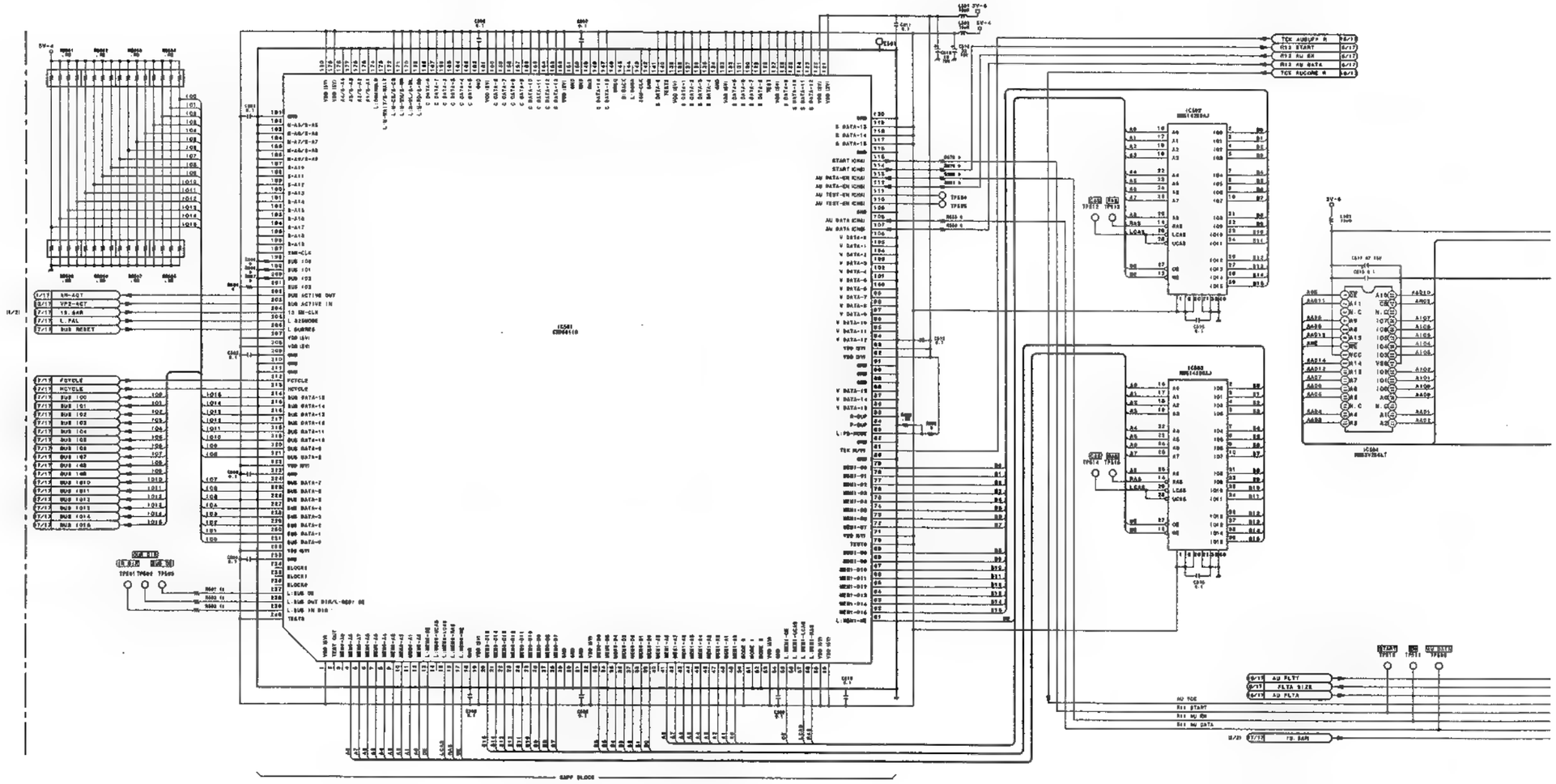

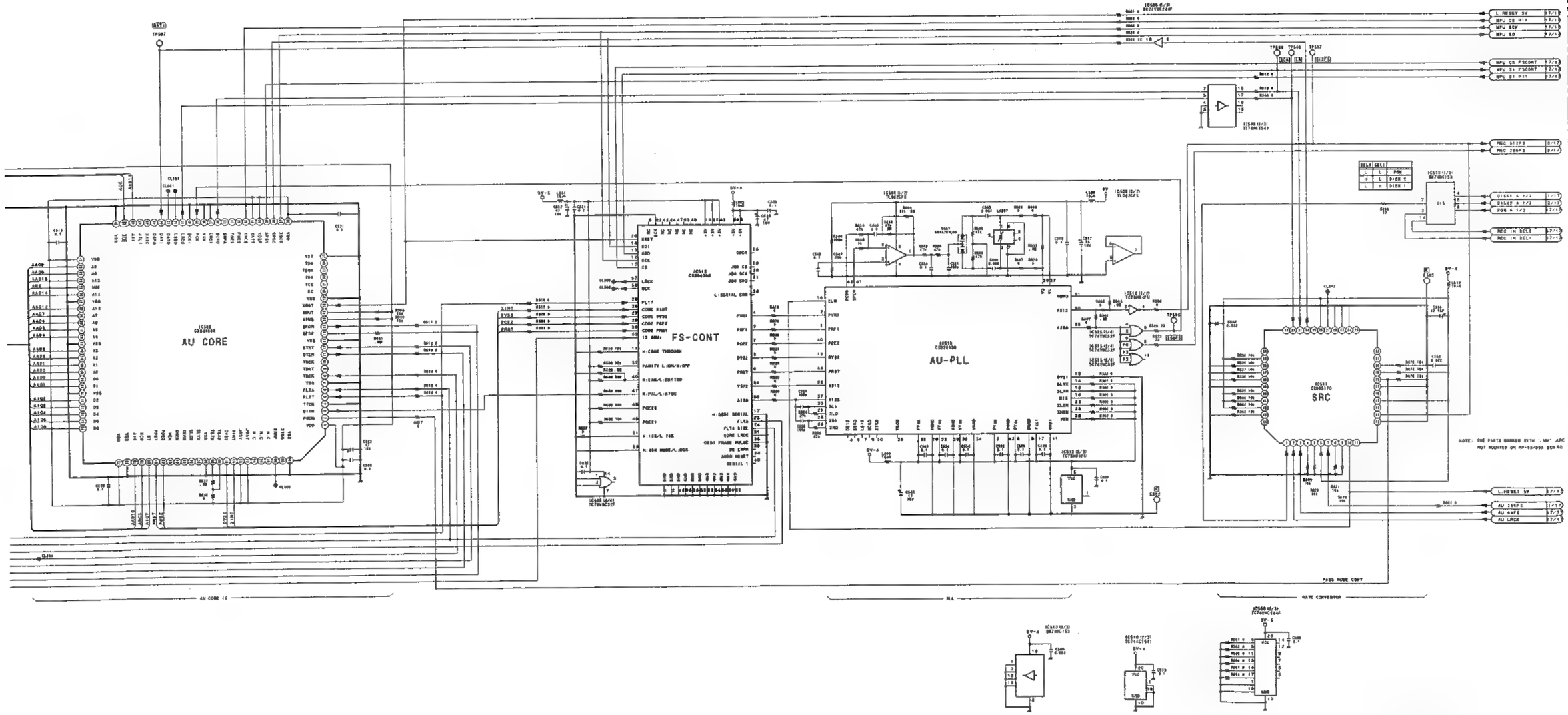

RP-89/89A (5/17)
PART NO 1-662-794-11
MODEL ESBK-7041
B-ESBK7041-RP89-11

AU REC 3/4

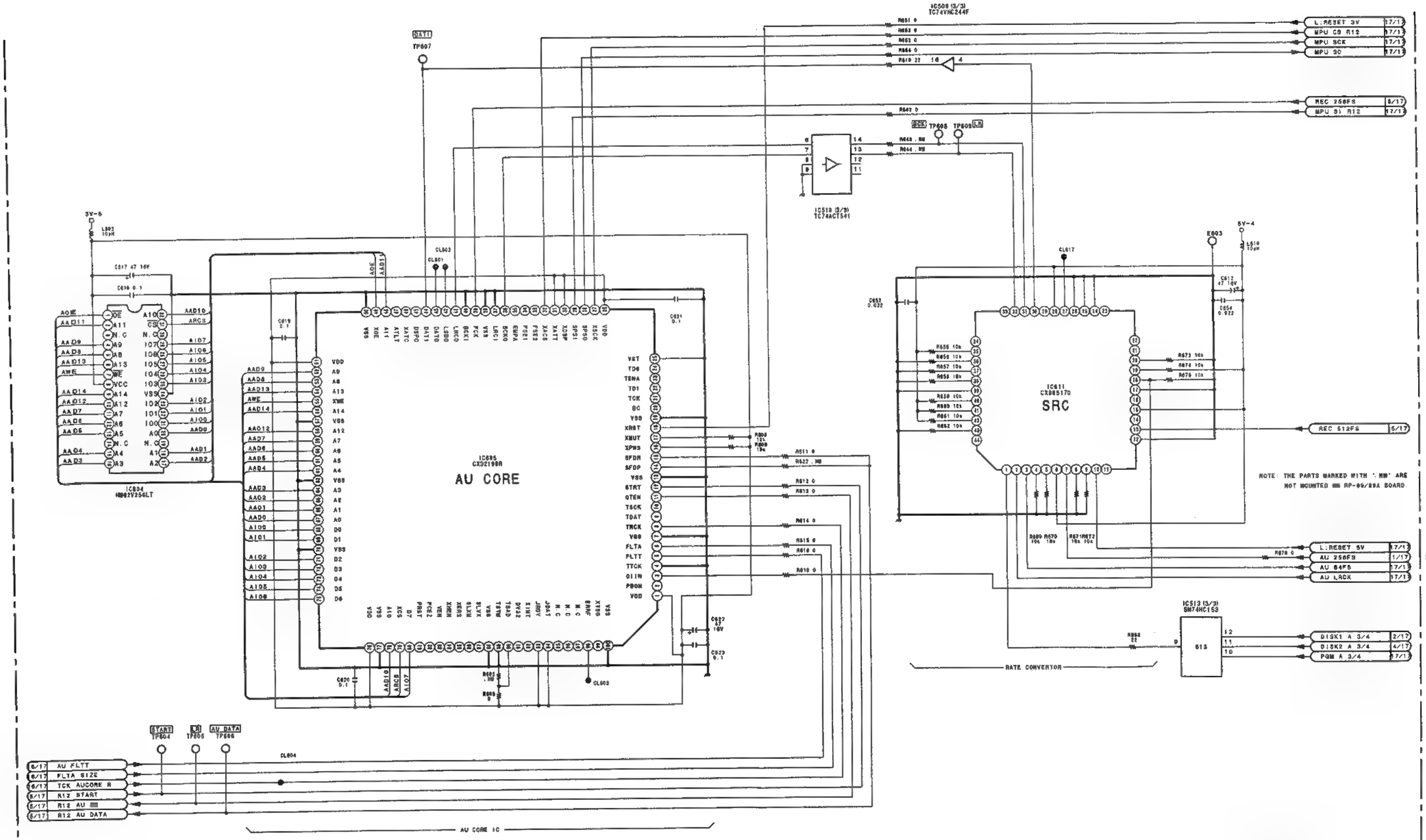

RP-89/89A (6/17)
PART NO 1-662-794-11
MODEL ESBK-7041
B-ESBK7041-RP89-11

REC BUFF

VIDEO REC

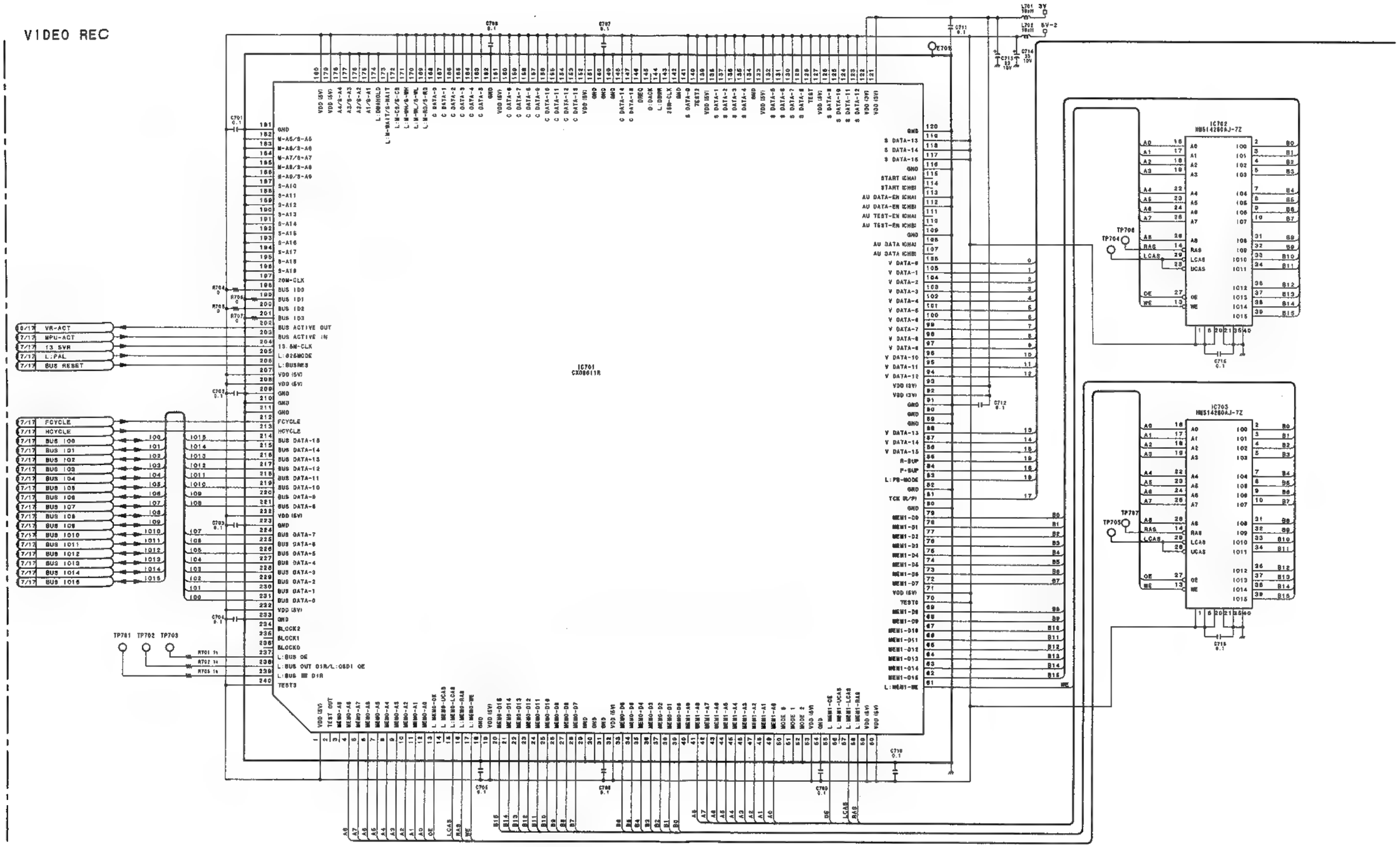

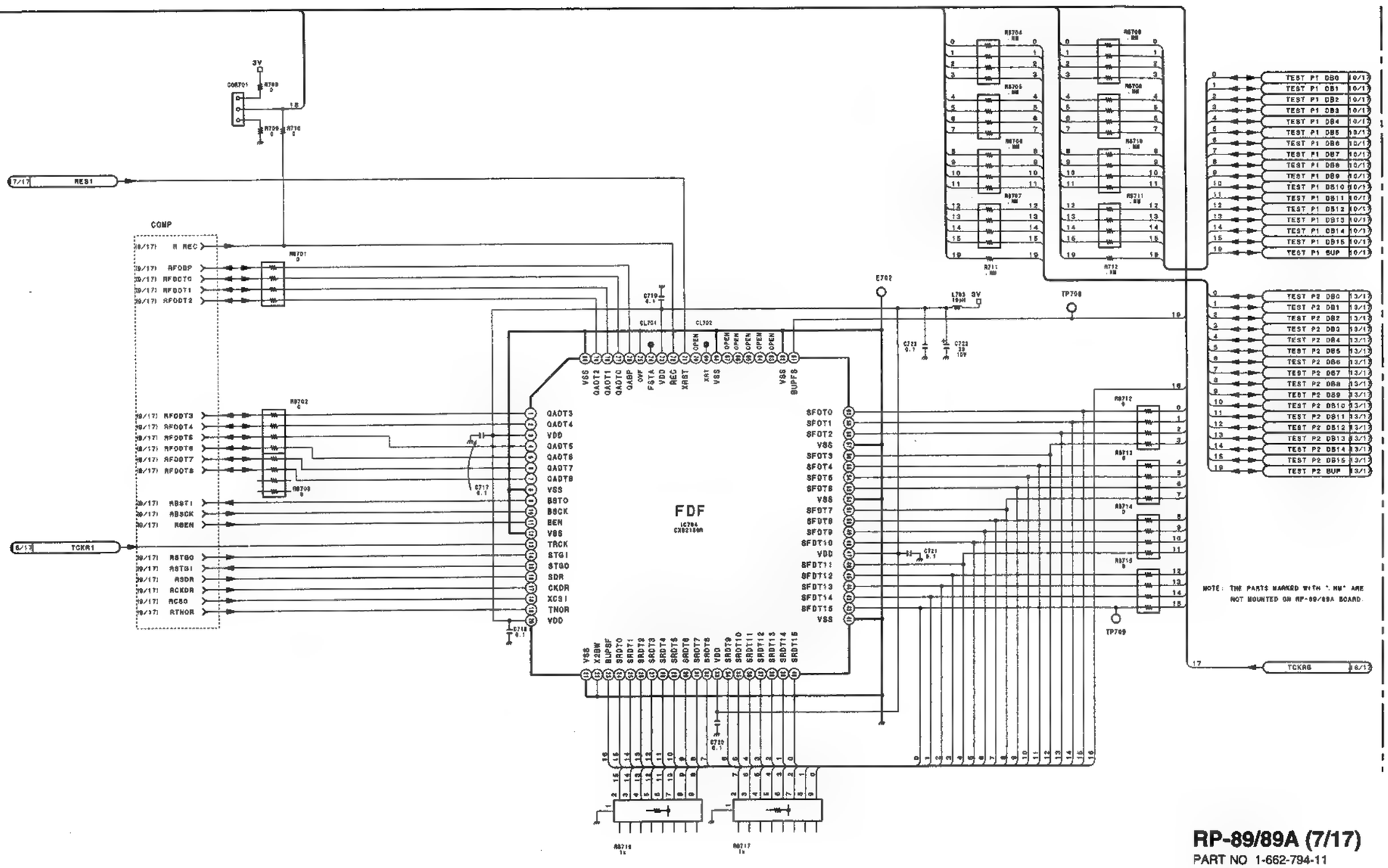

RP-89/89A (7/17)
PART NO 1-662-794-11
MODEL ESBK-7041
B-ESBK7041-RP89-11

REC BLK

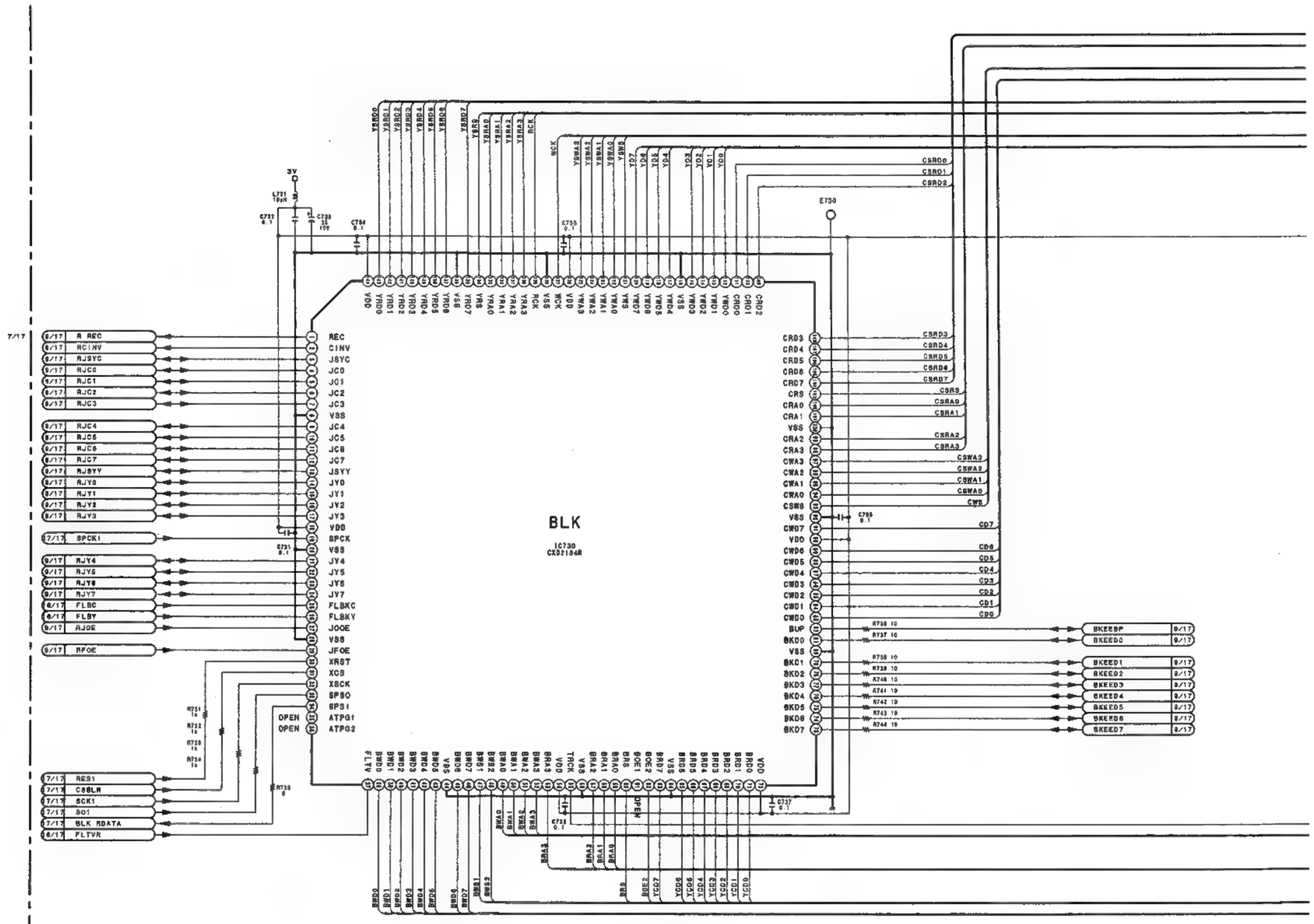
BLK
IC730
CX021046R
3V
E730
REC
C1NV
JSYC
JC0
JC1
JC2
JC3
VSS
JC4
JC5
JC6
JC7
JSYY
JY0
JY1
JY2
JY3
VDD
SPCK
VSS
JY4
JY5
JY6
JY7
FLBKC
FLBKY
JOOE
VSS
JFOE
XRST
XCS
XSCK
SPSO
SPSI
ATPG1
ATPG2
OPEN
OPEN
A REC
RC1NV
AJSYC
AJC0
AJC1
AJC2
AJC3
AJC4
AJC5
AJC6
AJC7
AJSYY
AJY0
AJY1
AJY2
AJY3
SPCK1
AJY4
AJY5
AJY6
AJY7
FLBC
FLBY
AJOE
AFOE
RES1
CS8LR
SCK1
SO1
BLK RDATA
FLTVR
CSRD0
CSRD1
CSRD2
CSRD3
CSRD4
CSRD5
CSRD6
CSRD7
CSRS
CSRA0
CSRA1
CSRA2
CSRA3
CSWA3
CSWA2
CSWA1
CSWA0
CSWS
CD7
CD6
CD5
CD4
CD3
CD2
CD1
CD0
BKEEBP
BKEED0
BKEED1
BKEED2
BKEED3
BKEED4
BKEED5
BKEED6
BKEED7

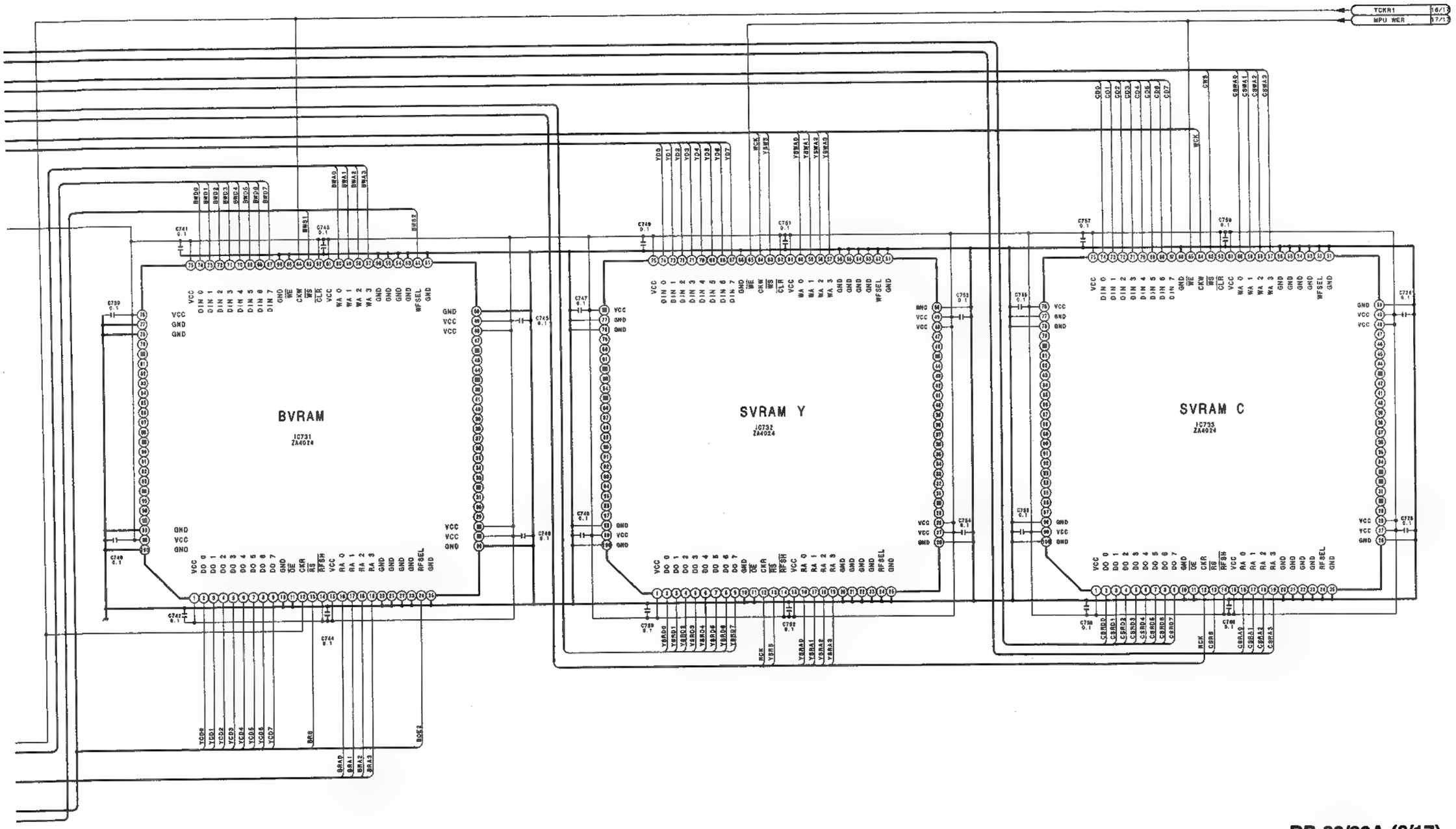

RP-89/89A (8/17)
PART NO 1-662-794-11
MODEL ESBK-7041
B-ESBK7041-RP89-11

REC NFIL

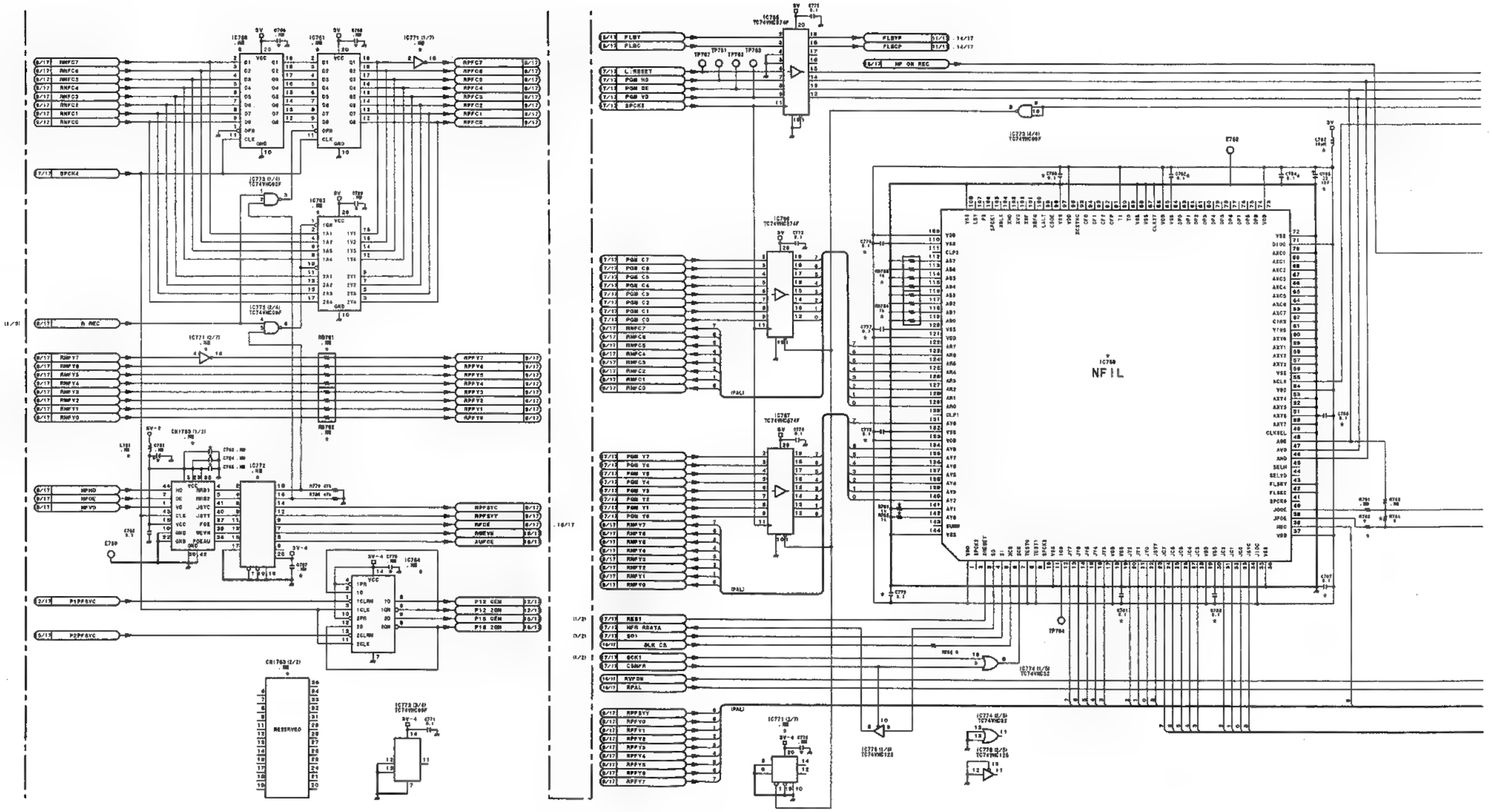
IC786 TC74VHC574F
IC787 TC74VHC574F
IC788 TC74VHC574F
IC759 NFIL
IC773 (1/4) TC74VHC08F
IC773 (2/4) TC74VHC08F
IC773 (3/4) TC74VHC08F
IC773 (4/4) TC74VHC08F
IC774 (1/3) TC74VHC32
IC774 (2/3) TC74VHC32
IC774 (3/3) TC74VHC32
IC771 (1/7) TC74VHC04F
IC771 (2/7) TC74VHC04F
IC771 (3/7) TC74VHC04F
IC771 (4/7) TC74VHC04F
IC761 TC74VHC574F
IC763 TC74VHC574F
IC764 TC74VHC574F
IC772 TC74VHC245F
CN1763 (1/3)
CN1763 (2/3)
RB761
RB762
RB763
RB764
RB765
RB766
RB767
RB768
RB769
RB770
RB771
RB772
RB773
RB774
RB775
RB776
RB777
RB778
RB779
RB780
RB781
RB782
RB783
RB784
RESERVED
PAL
PAL
PAL

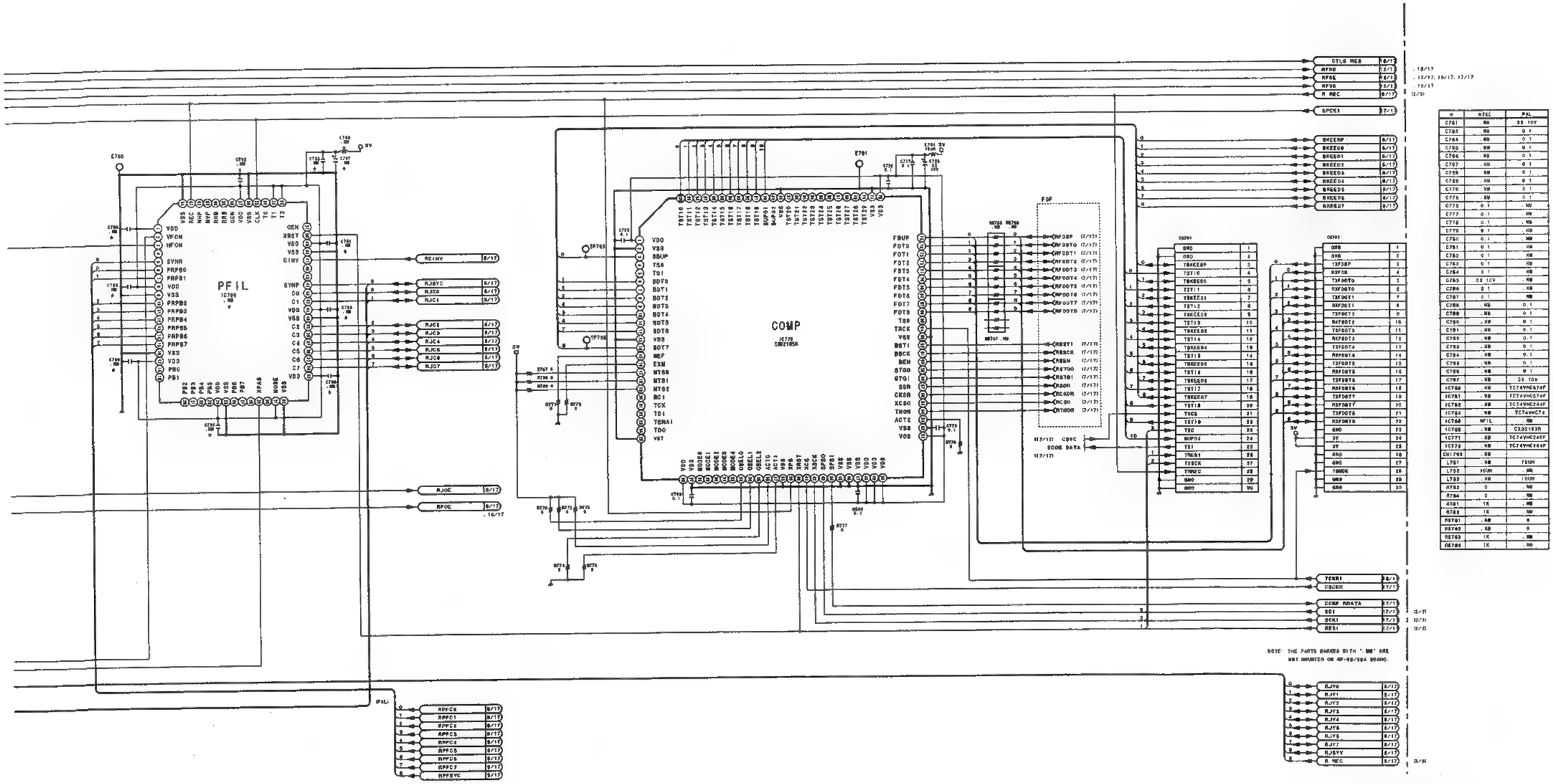

#	NTSC	PAL
C761	NM	33 16V
C763	NM	0.1
C764	NM	0.1
C765	NM	0.1
C766	NM	0.1
C767	NM	0.1
C768	NM	0.1
C769	NM	0.1
C770	NM	0.1
C775	NM	0.1
C776	0.1	NM
C777	0.1	NM
C778	0.1	NM
C779	0.1	NM
C780	0.1	NM
C781	0.1	NM
C782	0.1	NM
C783	0.1	NM
C784	0.1	NM
C785	33 10V	NM
C786	0.1	NM
C787	0.1	NM
C788	NM	0.1
C789	NM	0.1
C790	NM	0.1
C791	NM	0.1
C792	NM	0.1
C793	NM	0.1
C794	NM	0.1
C795	NM	0.1
C796	NM	0.1
C797	NM	33 10V
IC766	NM	TC74VHC574F
IC781	NM	TC74VHC574F
IC782	NM	TC74VHC244F
IC784	NM	TC74VHC74
IC788	NF/L	NM
IC789	NM	CXD2182R
IC771	NM	TC74VHC240F
IC778	NM	TC74VHC244F
CN1781	NM	
L761	NM	FOUH
L762	FOUH	NM
L763	NM	FOUH
R761	0	NM
R764	0	NM
R781	1K	NM
R782	1K	NM
R791	NM	0
R792	NM	0
R793	1K	NM
R794	1K	NM

RP-89/89A (9/17)
PART NO 1-662-794-11
MODEL ESBK-7041
B-ESBK7041-RP89-11

PB1 BUFF

VIDEO PB1

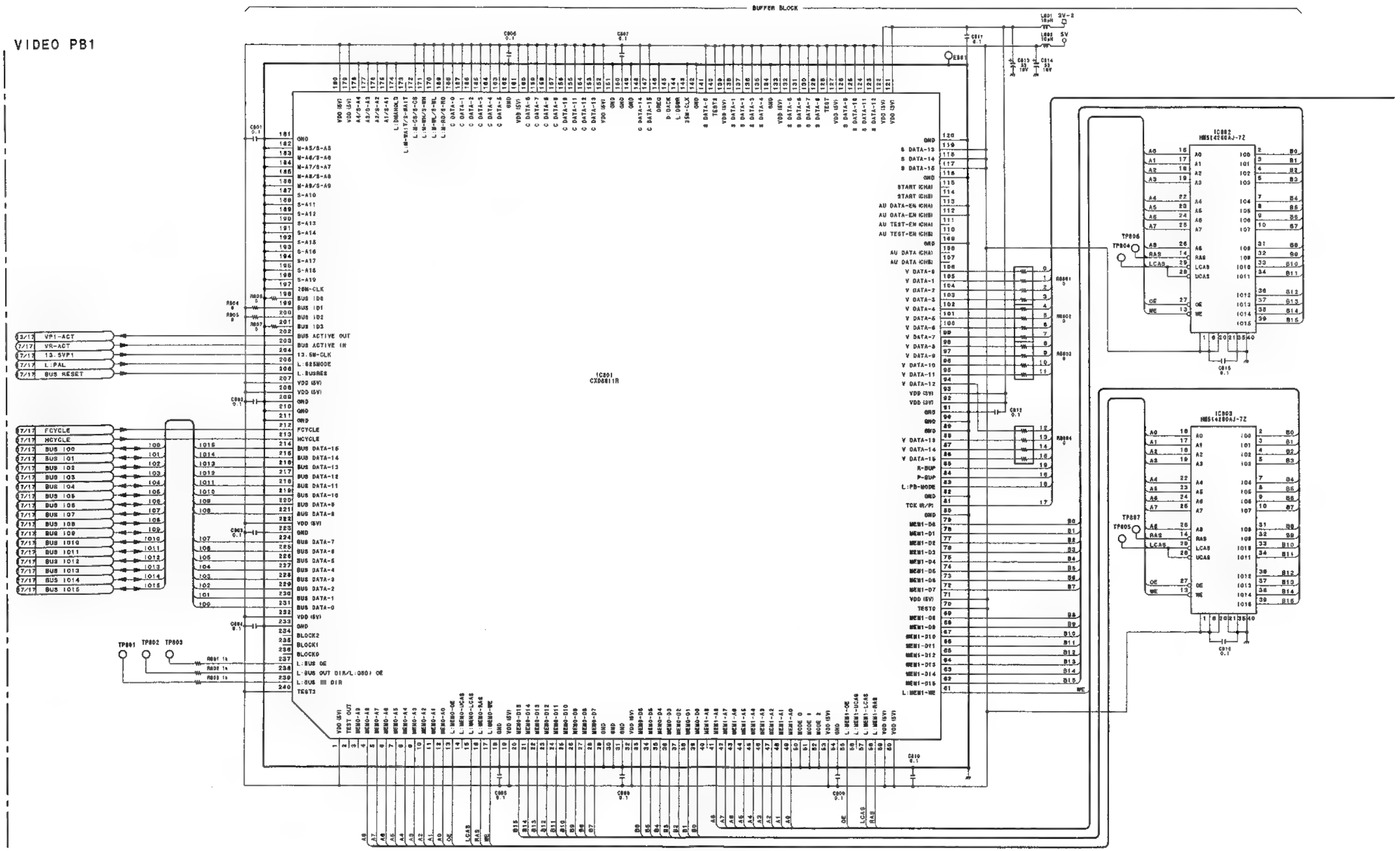

ESBK-7041

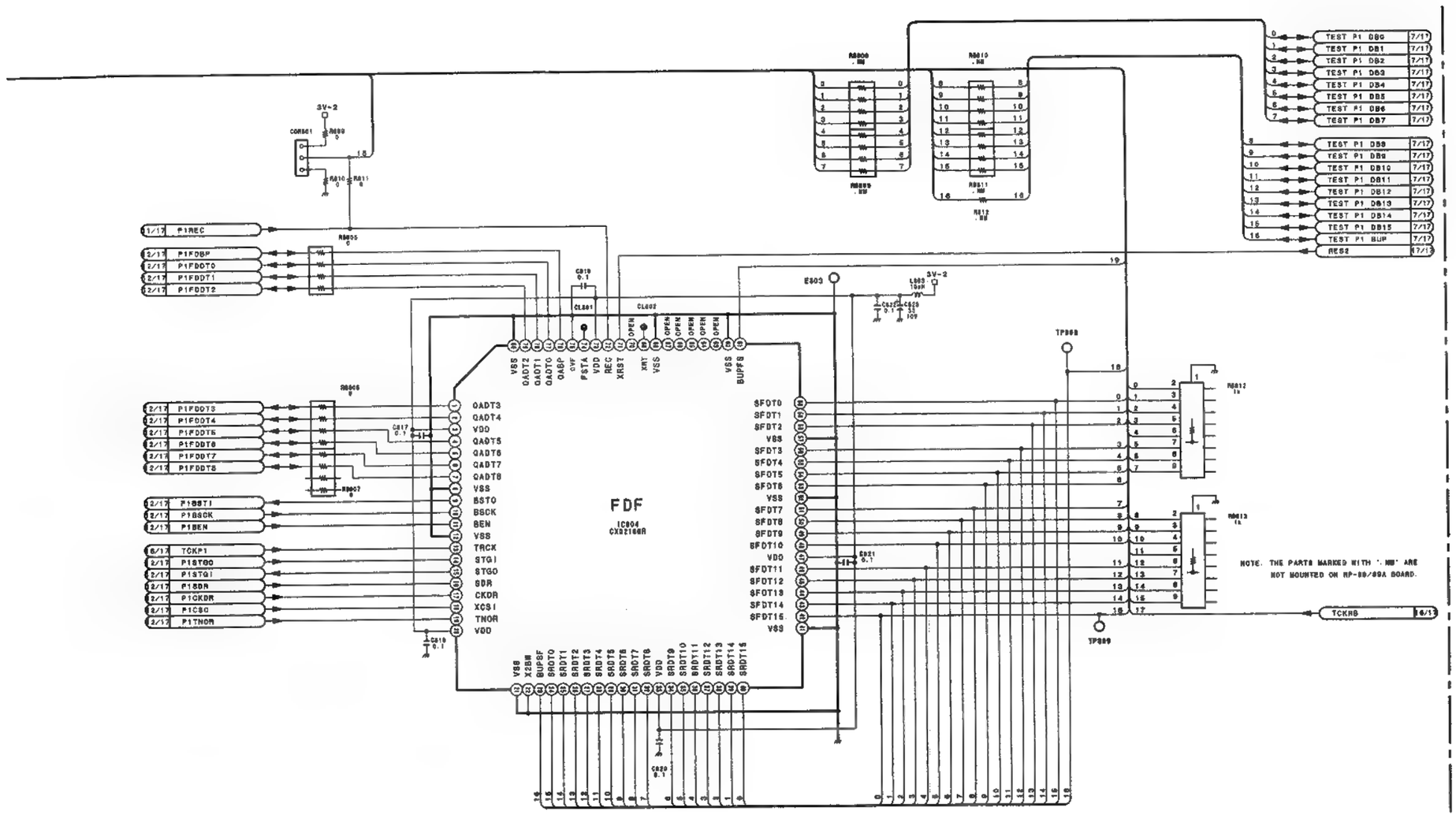

RP-89/89A (10/17)
PART NO 1-662-794-11
MODEL ESBK-7041
B-ESBK7041-RP89-11

PB1 BLK

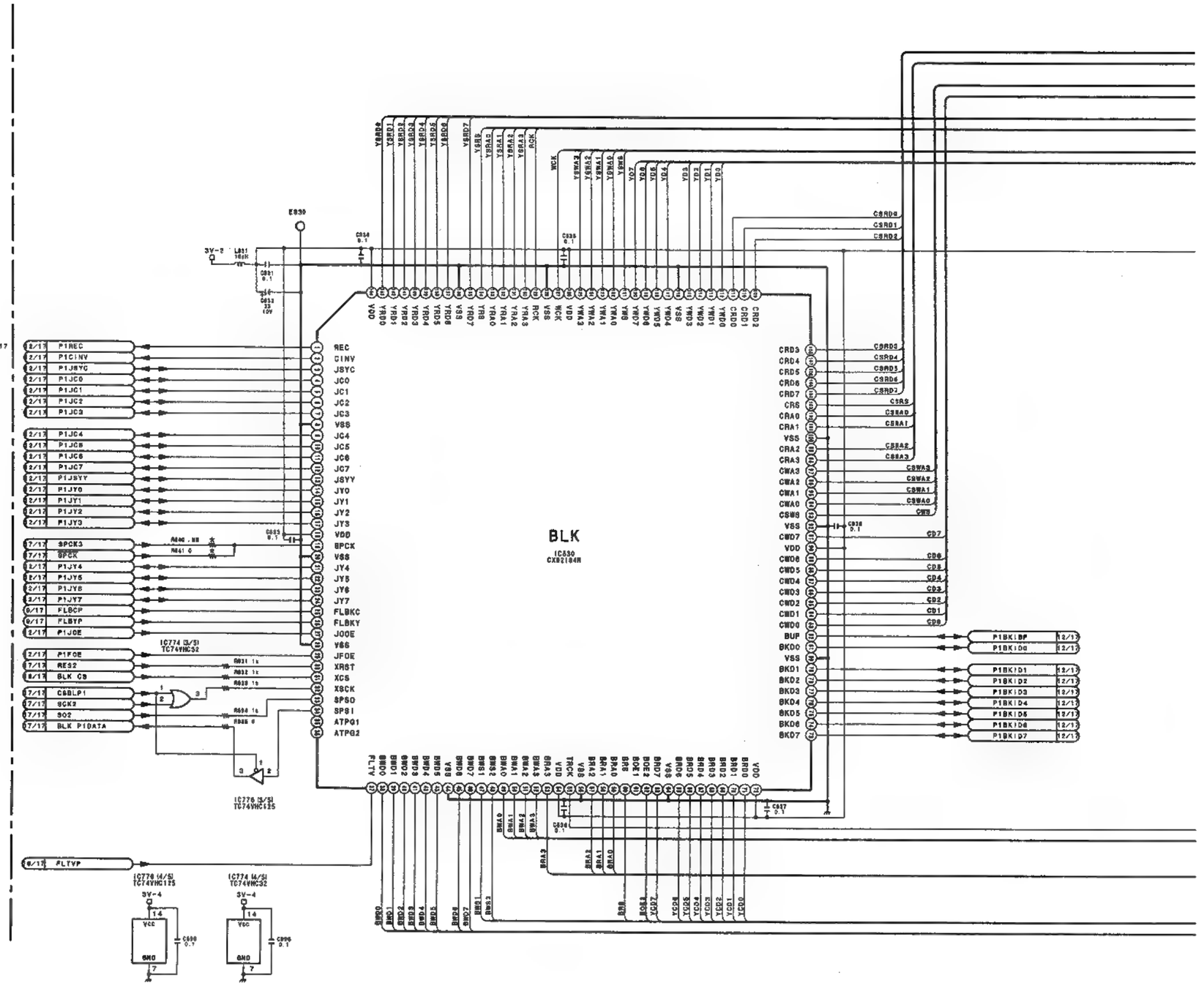

ESBK-7041

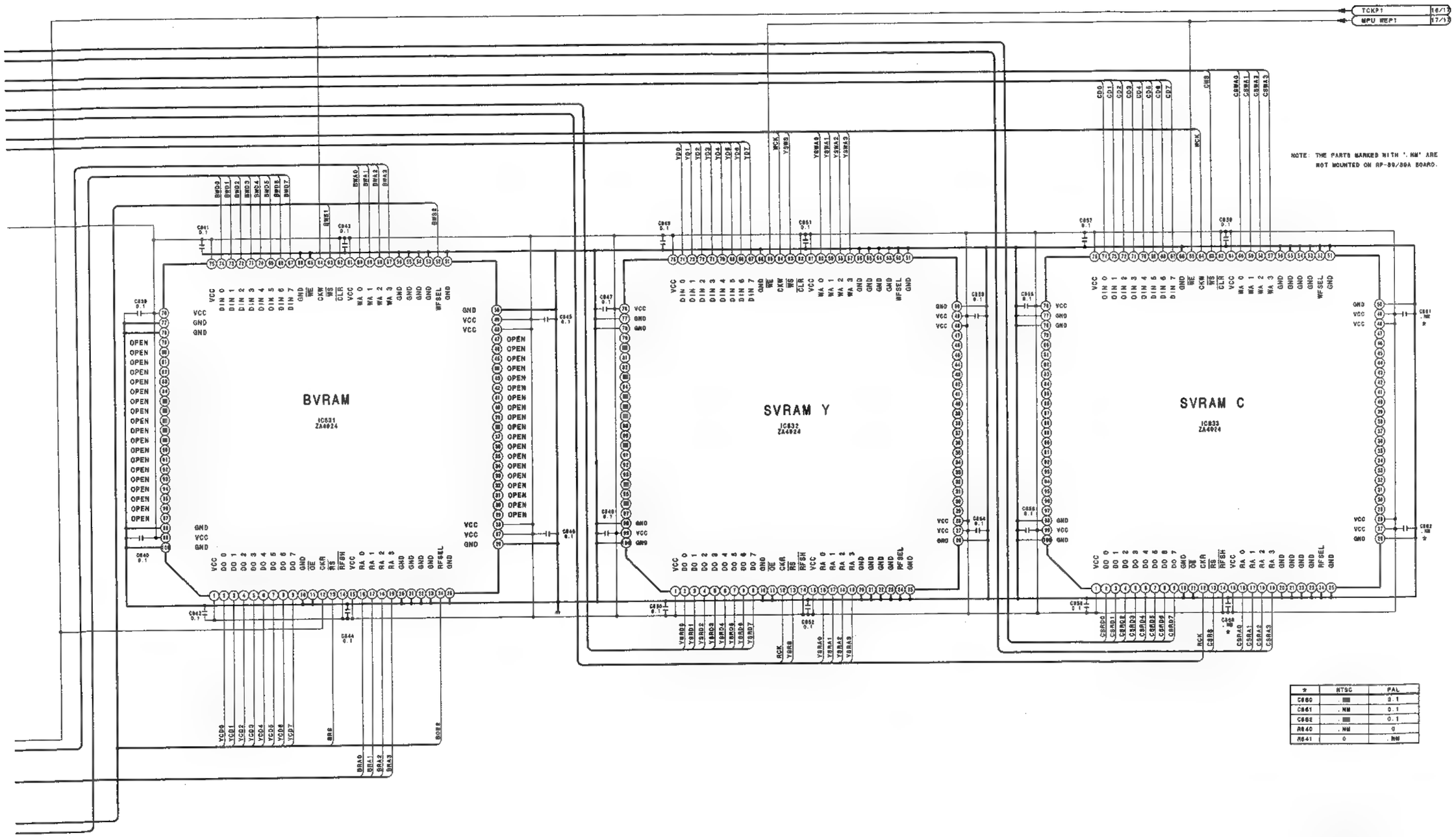

RP-89/89A (11/17)
PART NO 1-662-794-11
MODEL ESBK-7041
B-ESBK7041-RP89-11

PB1 NFIL

2-210 2-210

ESBK-7041

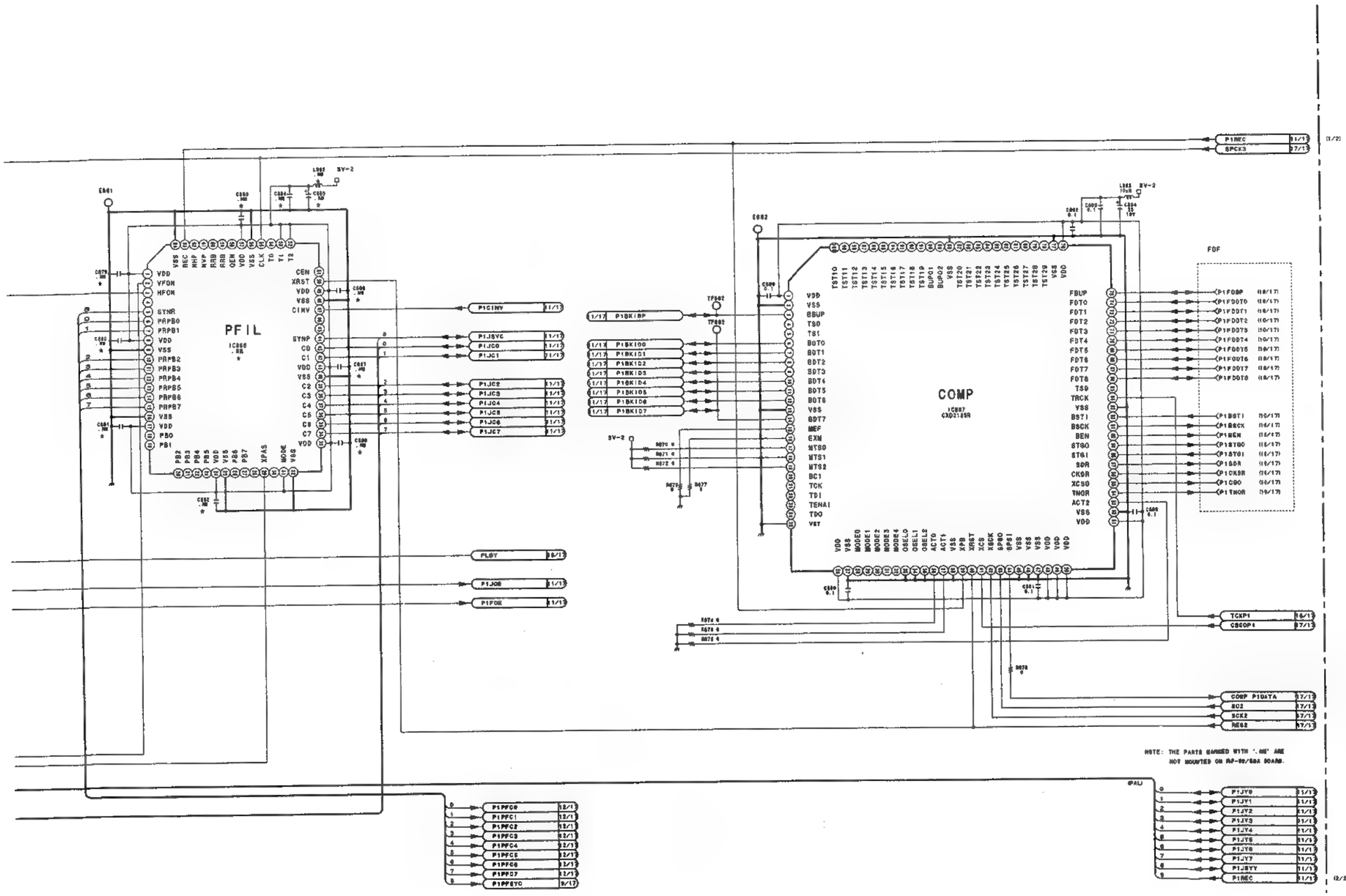

#	MTSC	PAL
C864	0.1	.NS
C867	0.1	.NS
C868	0.1	.NS
C869	0.1	.NS
C870	0.1	.NS
C871	0.1	.NS
C872	0.1	.NS
C873	0.1	.NS
C874	0.1	.NS
C875	0.1	.NS
C876	0.1	.NS
C877	33 10V	.NS
C878	0.1	.NS
C879	.NS	0.1
C880	.NS	0.1
C881	.NS	0.1
C882	.NS	0.1
C883	.NS	0.1
C884	.NS	0.1
C885	.NS	33 10V
C886	.NS	0.1
C887	.NS	0.1
C888	.NS	0.1
IC860	.NS	TC74VHC574F
IC861	.NS	TC74VHC574F
IC862	.NS	TC74VHC244F
IC885	MFIL	.NS
IC888	.NS	CXD2185R
L861	10UH	.NS
L862	.NS	10UH
RB61	0	.NS
RB62	0	.NS
RB65	0	.NS
RB67	0	.NS
RB861	.NS	0
RB862	.NS	0

RP-89/89A (12/17)
PART NO 1-662-794-11
MODEL ESBK-7041
B-ESBK7041-RP89-11

PB2 BUFF

VIDEO PB2

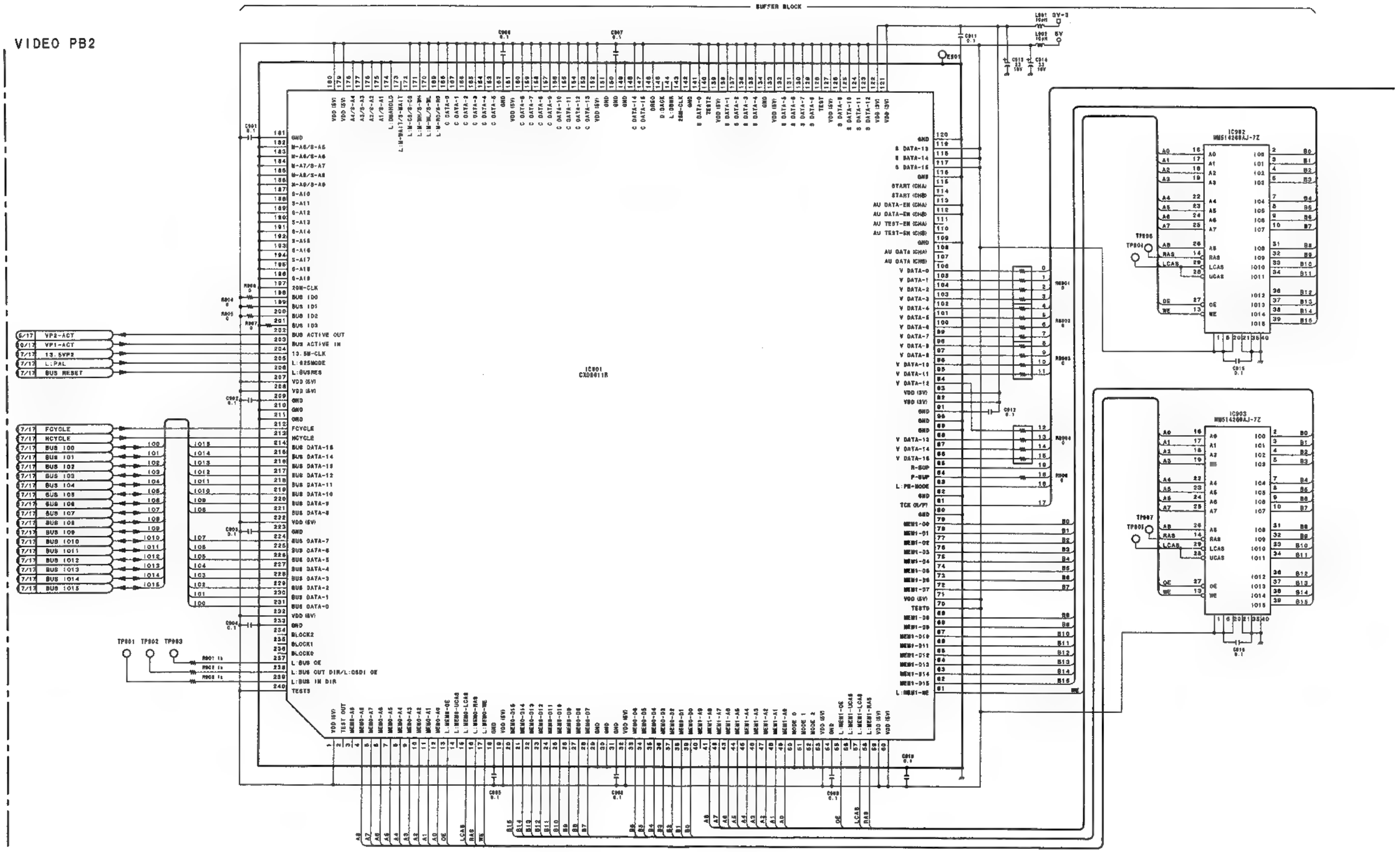

ESBK-7041

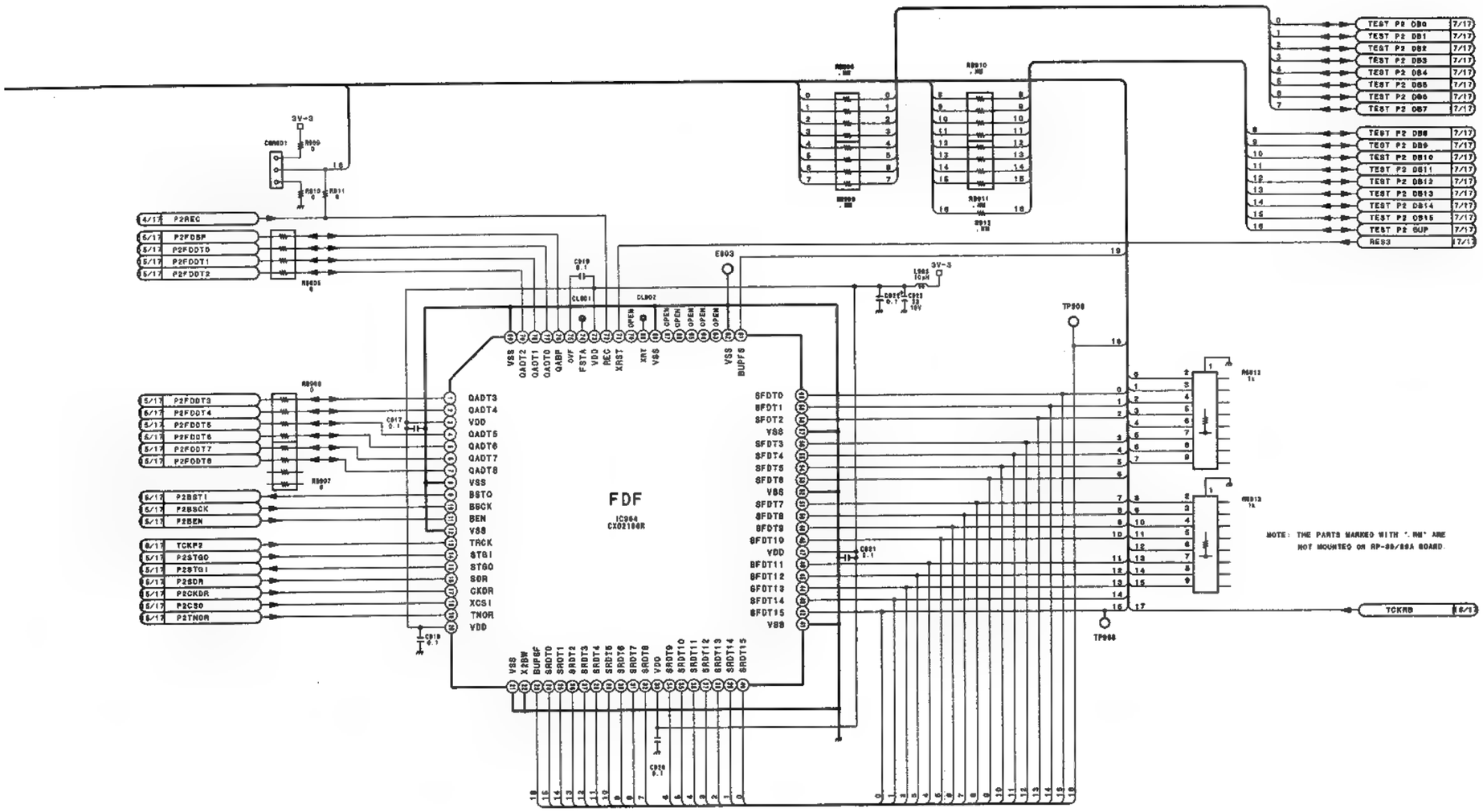

RP-89/89A (13/17)
PART NO 1-662-794-11
MODEL ESBK-7041
B-ESBK7041-RP89-11

PB2 BLK

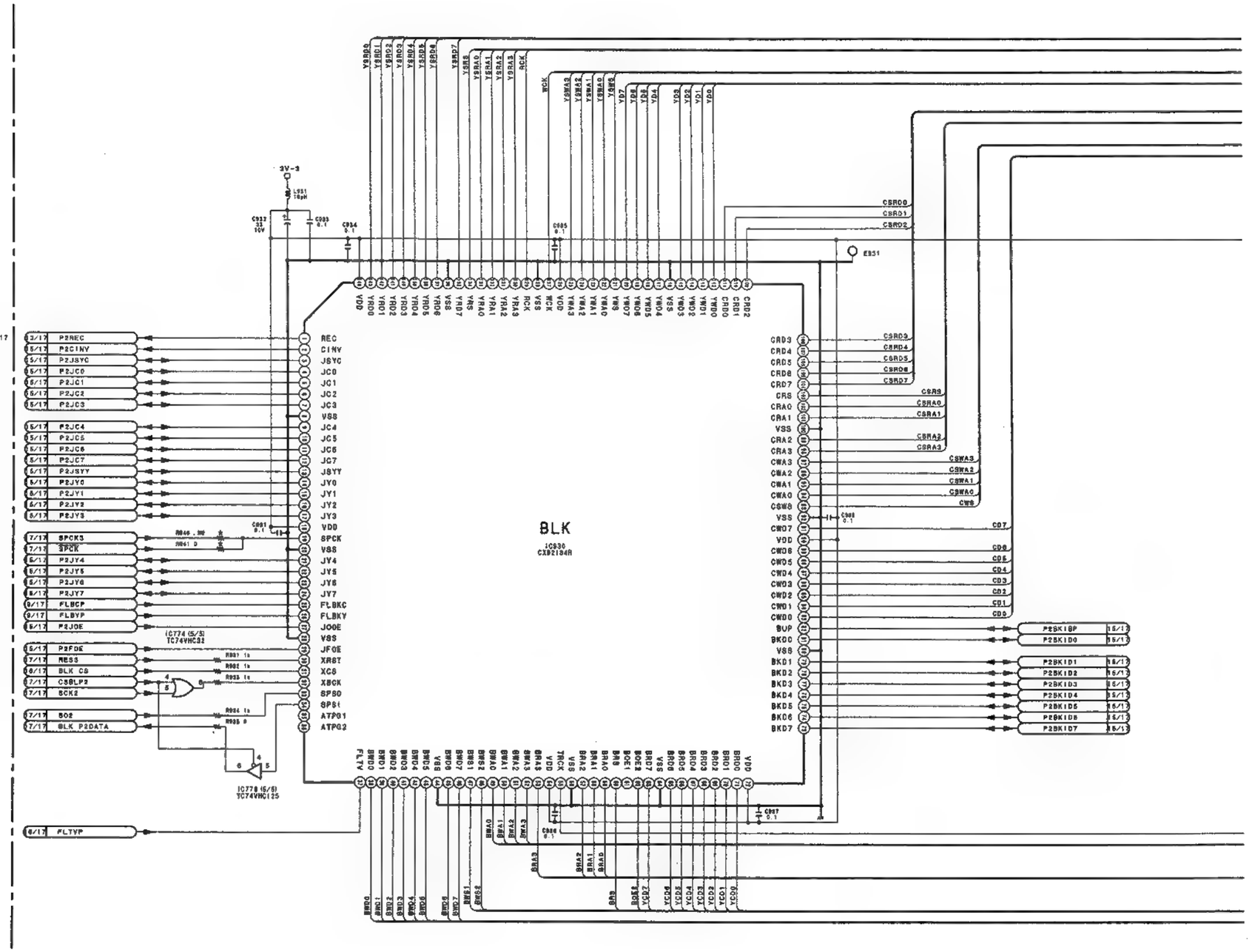
BLK
IC930
CXB2104R
3V-3
L931 10μH
C933 33 10V
C983 0.1
C934 0.1
C985 0.1
E951
C988 0.1
C987 0.1
C986 0.1
IC774 (5/5) TC74VHC32
IC778 (5/5) TC74VHC125
R841 0
R842 1k
R843 1k
R844 1k
R845 0
15/17
5/17 P2REC
5/17 P2CINV
5/17 P2JSYC
5/17 P2JC0
5/17 P2JC1
5/17 P2JC2
5/17 P2JC3
5/17 P2JC4
5/17 P2JC5
5/17 P2JC6
5/17 P2JC7
5/17 P2JSYY
5/17 P2JY0
5/17 P2JY1
5/17 P2JY2
5/17 P2JY3
7/17 SPCK3
7/17 SPCK
5/17 P2JY4
5/17 P2JY5
5/17 P2JY6
5/17 P2JY7
9/17 FLBCP
9/17 FLBYP
5/17 P2JOE
5/17 P2FOE
7/17 RES3
10/17 BLK CS
7/17 CSBLP2
7/17 SCK2
7/17 SO2
17/17 BLK P2DATA
9/17 FLTYP
REC
CINV
JSYC
JC0
JC1
JC2
JC3
VSS
JC4
JC5
JC6
JC7
JSYY
JY0
JY1
JY2
JY3
VDD
SPCK
VSS
JY4
JY5
JY6
JY7
FLBKC
FLBKY
JOOE
VSS
JFOE
XRST
XCS
XSCK
SPSO
SPSI
ATPG1
ATPG2
CSRD0
CSRD1
CSRD2
CSRD3
CSRD4
CSRD5
CSRD6
CSRD7
CSRS
CSRA0
CSRA1
CSRA2
CSRA3
CSWA3
CSWA2
CSWA1
CSWA0
CSWB
CD7
CD6
CD5
CD4
CD3
CD2
CD1
CD0
P2BK1SP 15/17
P2BK1D0 15/17
P2BK1D1 15/17
P2BK1D2 15/17
P2BK1D3 15/17
P2BK1D4 15/17
P2BK1D5 15/17
P2BK1D6 15/17
P2BK1D7 15/17

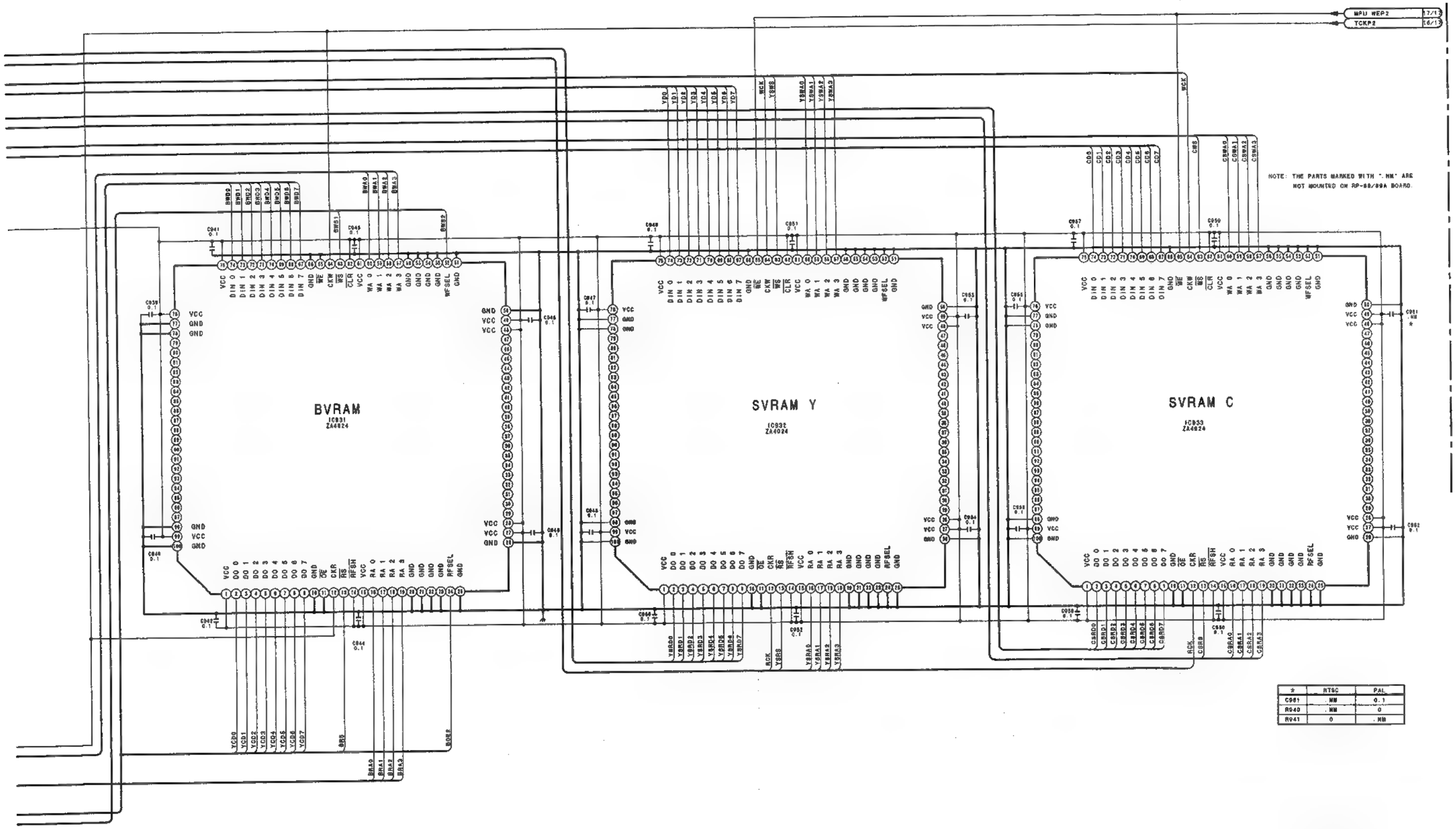
MPU WEP2 17/13
TCKP2 16/13
NOTE: THE PARTS MARKED WITH "NM" ARE NOT MOUNTED ON RP-89/89A BOARD.
BVRAM
IC831
ZA4824
SVRAM Y
IC832
ZA4824
SVRAM C
IC833
ZA4824
C941 0.1
C945 0.1
C947 0.1
C949 0.1
C951 0.1
C953 0.1
C955 0.1
C957 0.1
C959 0.1
C961 NM *
C962 0.1
C963 0.1
C964 0.1
C965 0.1
C966 0.1
C967 0.1
C968 0.1
C969 0.1
C970 0.1
C971 0.1
C972 0.1
C973 0.1
C974 0.1
C975 0.1
C976 0.1
C977 0.1
C978 0.1
C979 0.1
C980 0.1
C981 0.1

PB2 NFIL

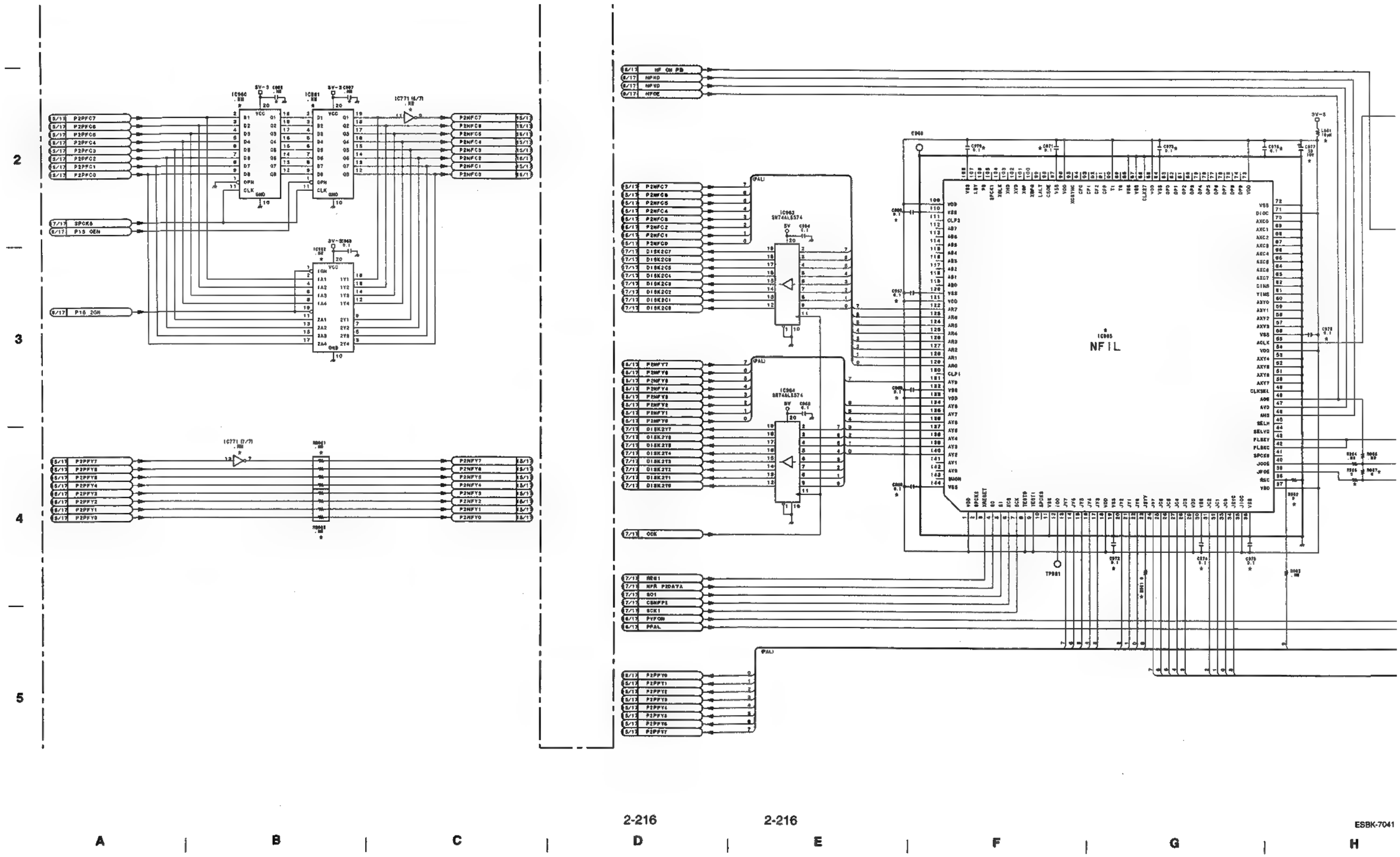

ESBK-7041

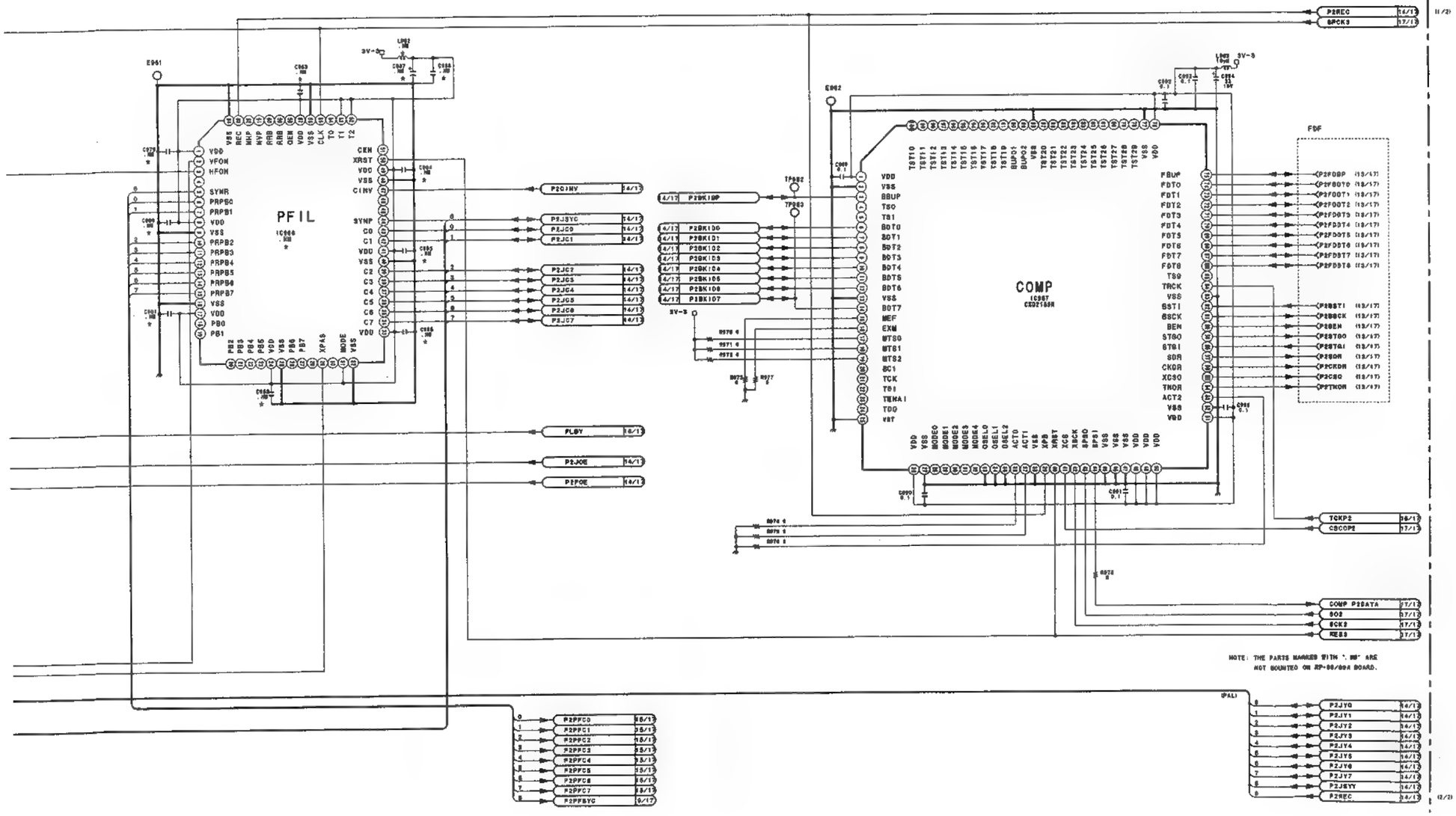

*	NTSC	PAL
C967	0.1	. NV
C968	0.1	. NS
C969	0.1	. NS
C970	0.1	. NV
C971	0.1	. NS
C972	0.1	. NV
C973	0.1	. NV
C974	0.1	. NV
C975	0.1	. NV
C976	0.1	. NV
C977	33 10V	. NV
C978	0.1	. NV
C979	. NS	0.1
C980	. NS	0.1
C981	. NS	0.1
C982	. NS	0.1
C983	. NS	0.1
C984	. NS	0.1
C985	. NS	0.1
C986	. NS	0.1
C987	. NS	33 10V
C988	. NS	0.1
C994	. NS	0.1
C997	. NS	0.1
IC960	. NS	TC74VHC574F
IC961	. NS	TC74VHC574F
IC962	. NS	TC74VHC244F
IC965	NFIL	. NV
IC966	. NS	CXD2185R
L961	10UH	. NV
L962	. NS	10UH
R961	0	. NV
R962	0	. NV
R965	0	. NV
R967	0	. NV
RB961	. NS	0
RB962	. NS	0

RP-89/89A (15/17)
PART NO 1-662-794-11
MODEL ESBK-7041
B-ESBK7041-RP89-11

CTLG

1

2

3

4

5

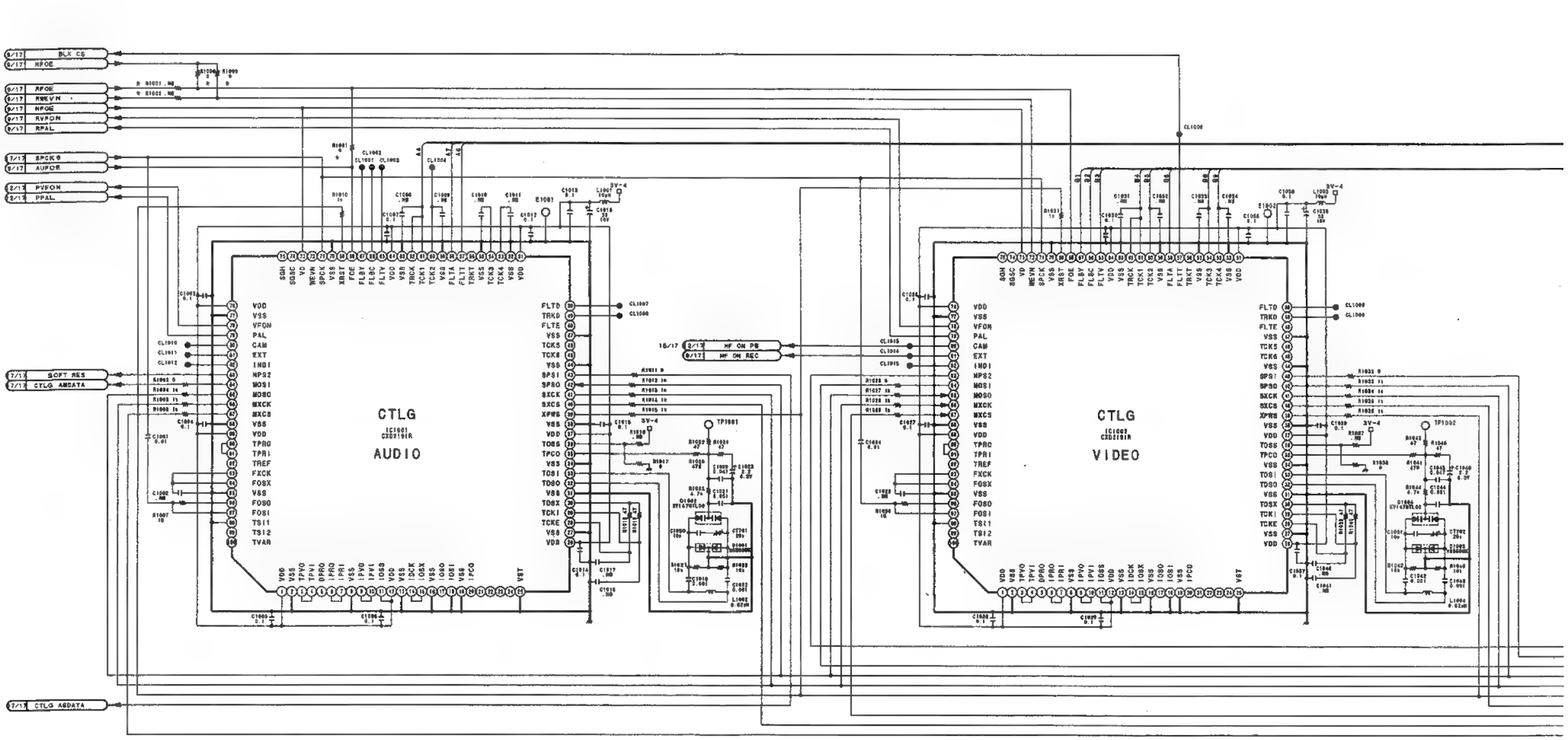

ESBK-7041

A B C D E F G H

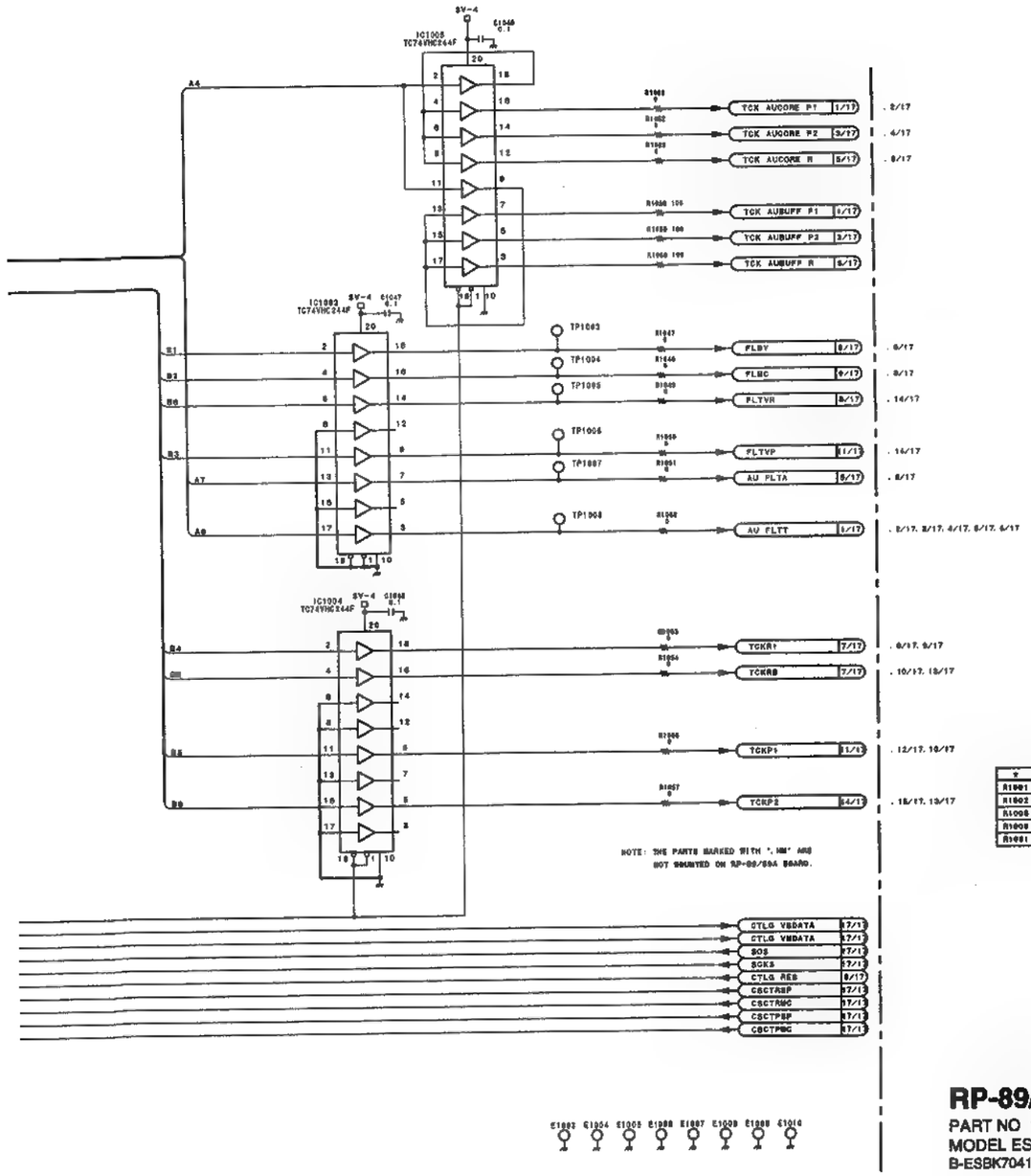

#	NTSC	PAL
R1001	* NM	0
R1002	* NM	0
R1008	0	* NM
R1009	0	* NM
R1001	0	* NM

RP-89/89A (16/17)

PART NO 1-662-794-11
MODEL ESBK-7041
B-ESBK7041-RP89-11

MB

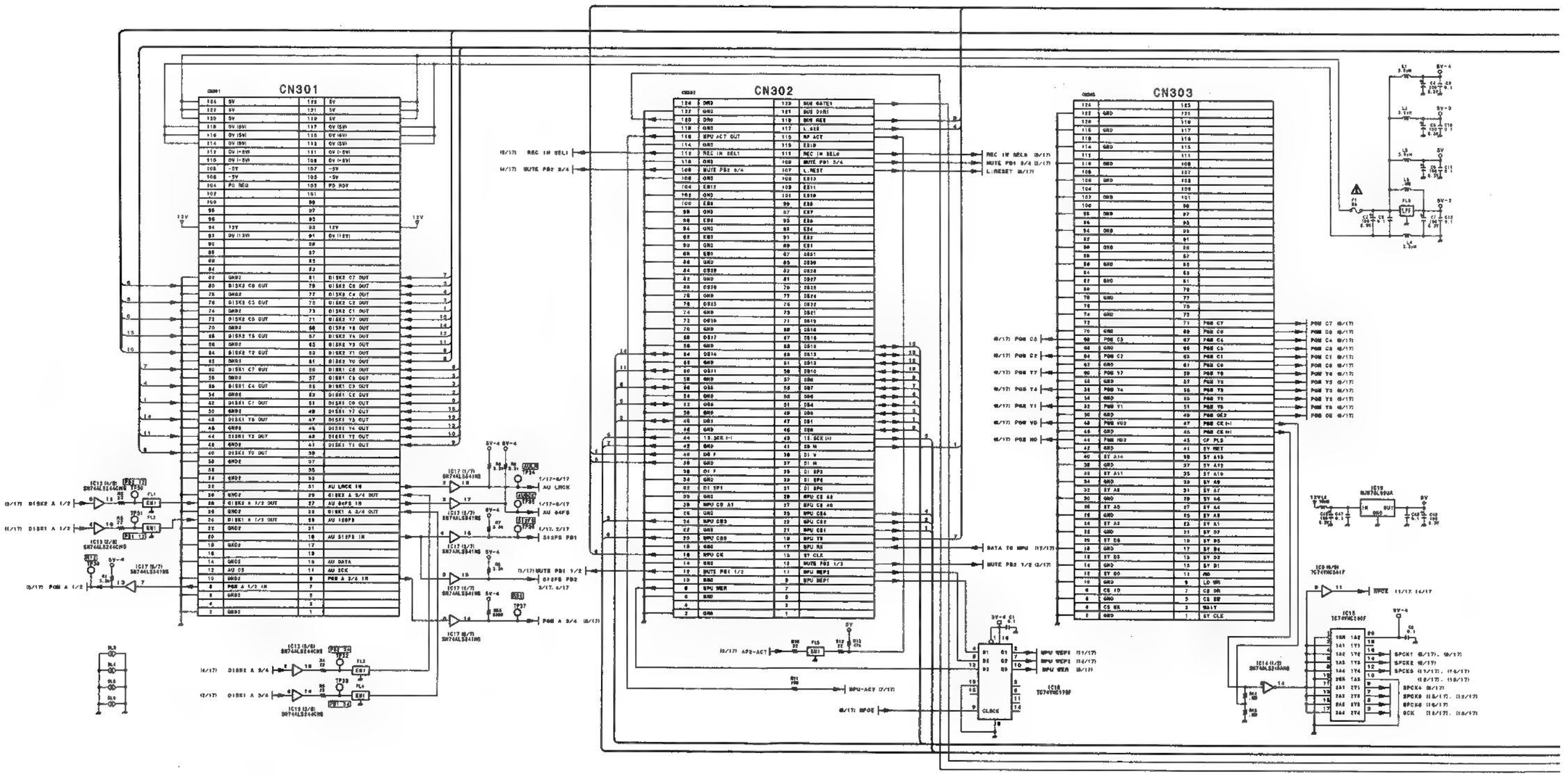
CN301
CN302
CN303
IC13 (5/8) SN74ALS244CNS
IC17 (5/7) SN74ALS541NS
IC12 (5/7) SN74ALS541NS
IC18 (5/8) SN74ALS244CNS
IC10 TC74VHC139F
IC15 TC74VHC240F
IC19 NJM78L09UA
IC14 (1/2) SN74ALS32AMS
REC IN SEL1
MUTE PB2 3/4
REC IN SEL0
MUTE PB1 3/4
L-RESET
DATA TO MPU
MUTE PB1 1/2
MUTE PB2 1/2
MPU WEP2
MPU WEP1
MPU WER
MPU-ACT
MPOE
AU LRCK IN
AU 64FS IN
AU 512FS IN
AU DATA
AU SCK
512FS PB1
512FS PB2
PCM A 1/2 IN
PCM A 3/4 IN
DISK2 A 1/2
DISK1 A 1/2
DISK2 A 3/4
DISK1 A 3/4
SPCK1
SPCK2
SPCK3
SPCK4
SCK

ESBK-7041

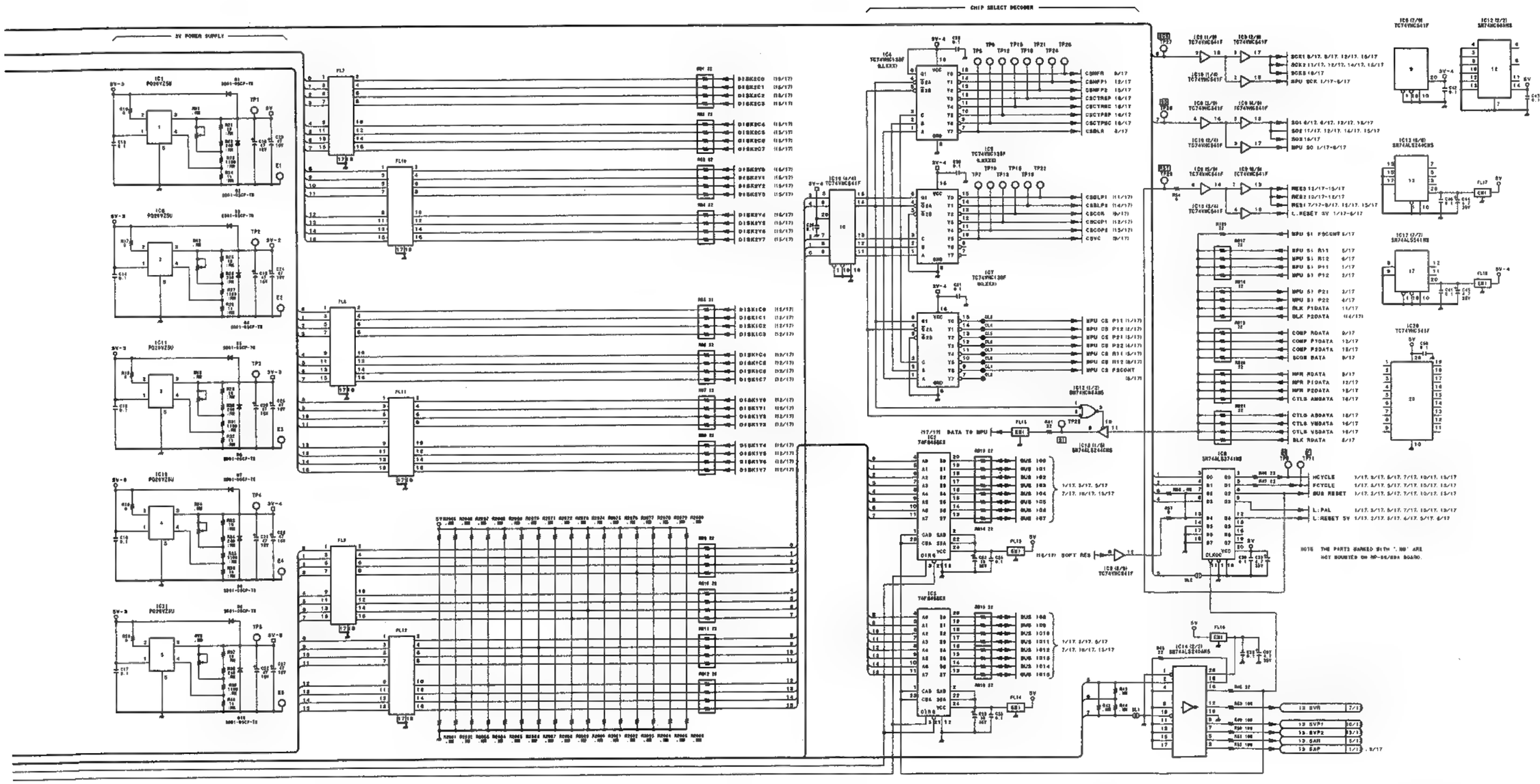

RP-89/89A (17/17)
PART NO 1-662-794-11
MODEL ESBK-7041
B-ESBK7041-RP89-11

FRAME WIRING (1/4)

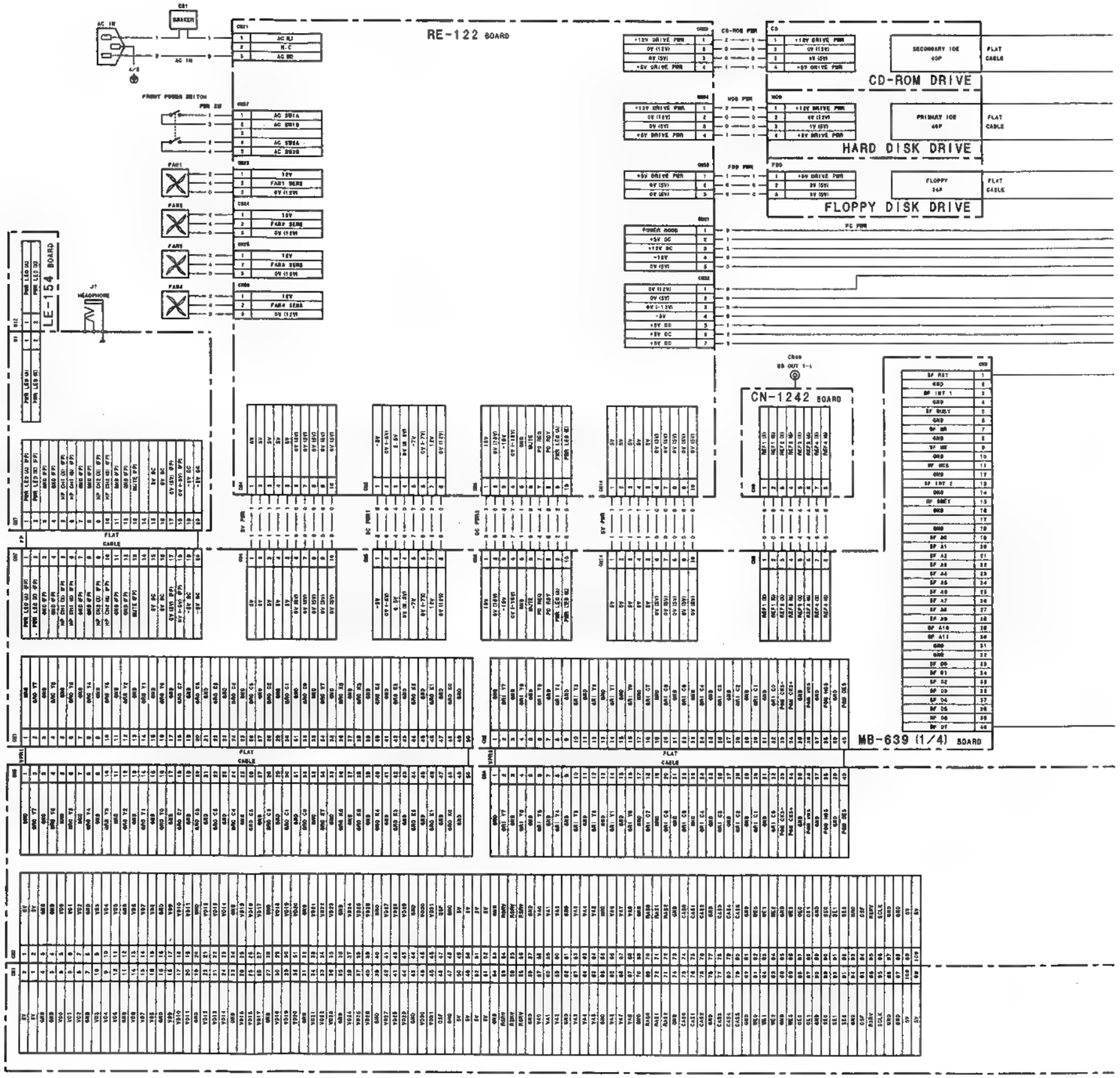

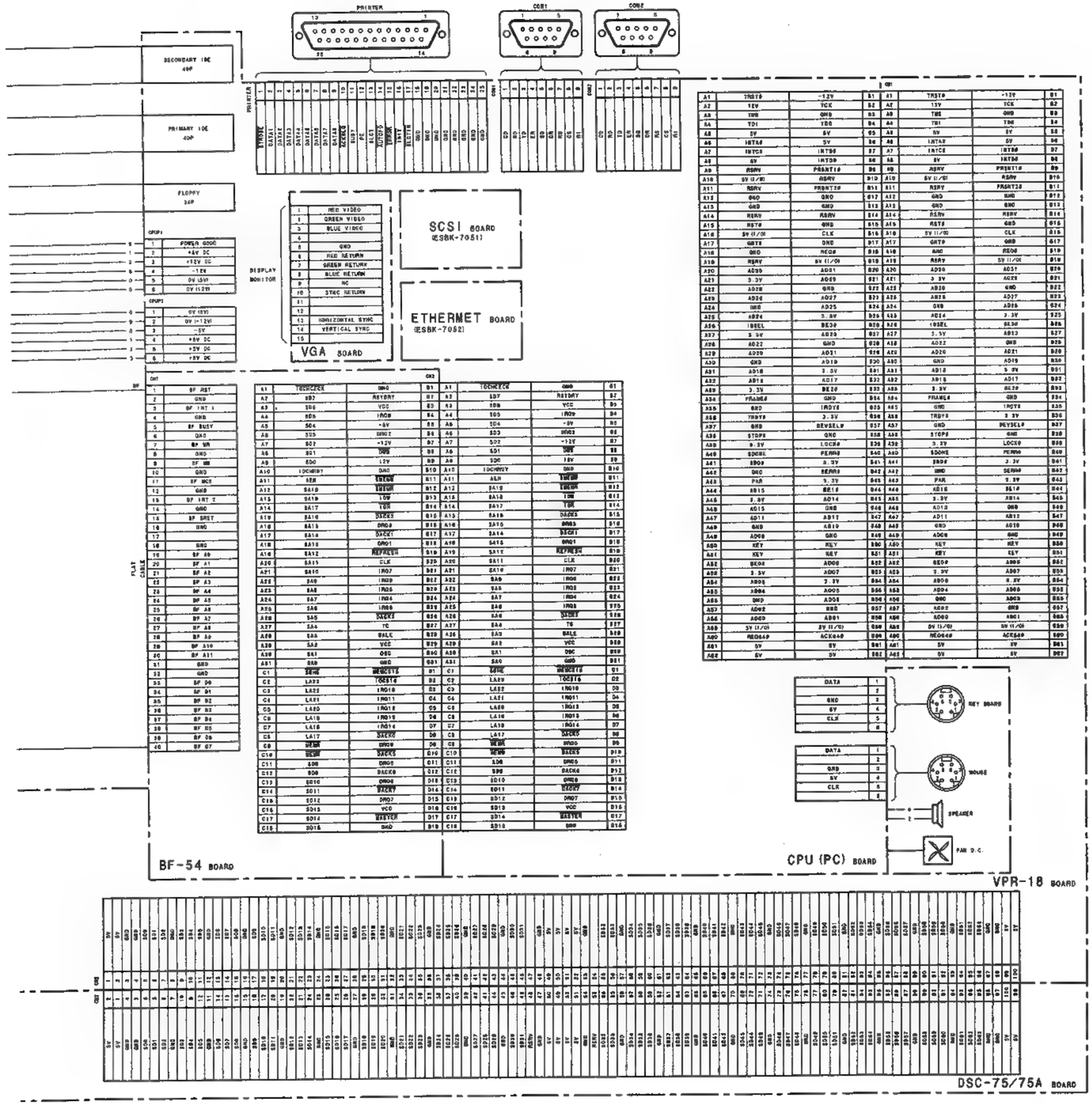

FRAME WIRING (1/4)

MODEL ES-7
B-ES7-FRAME#1

FRAME WIRING (2/4)

FRAME WIRING (2/4)

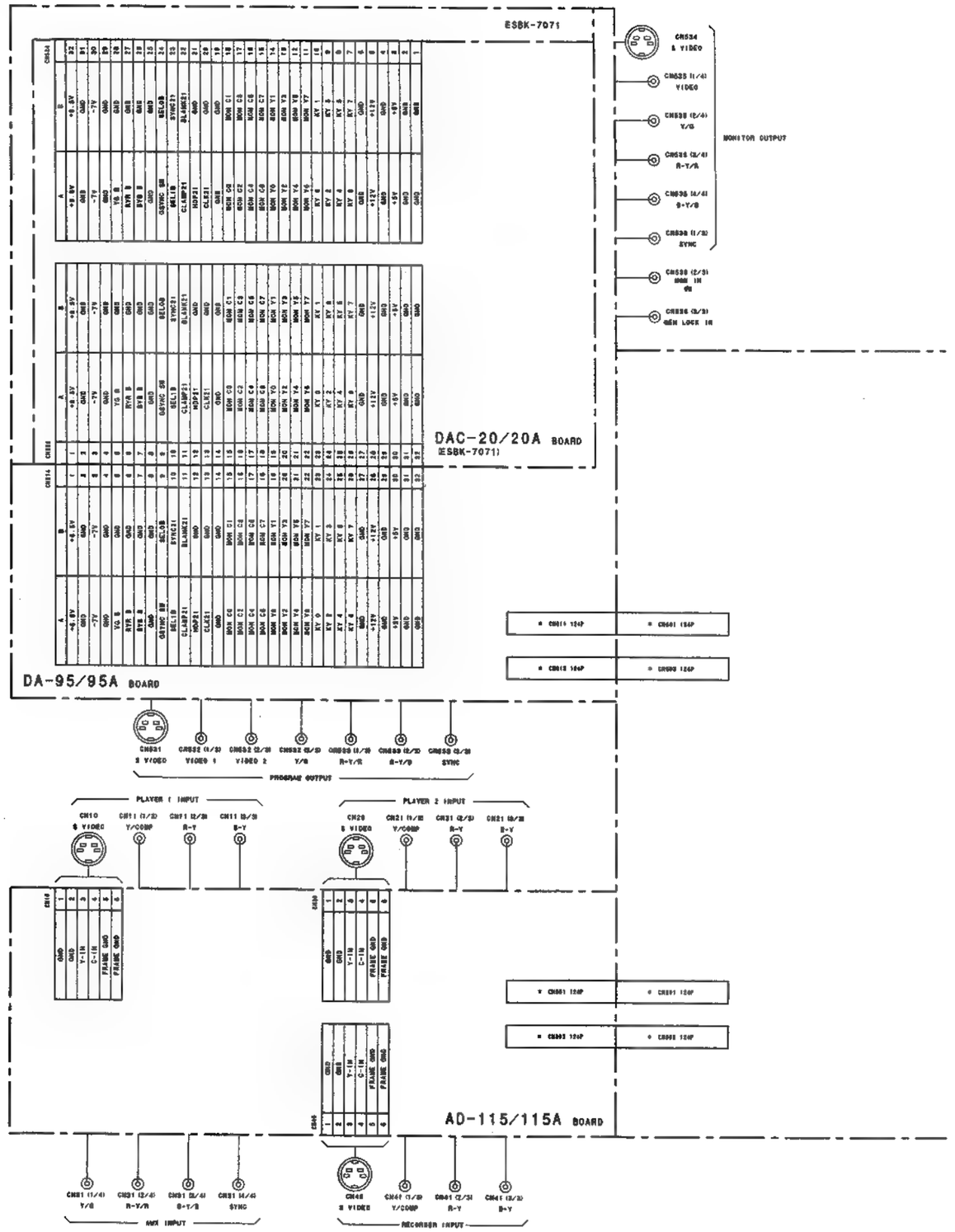

2-224

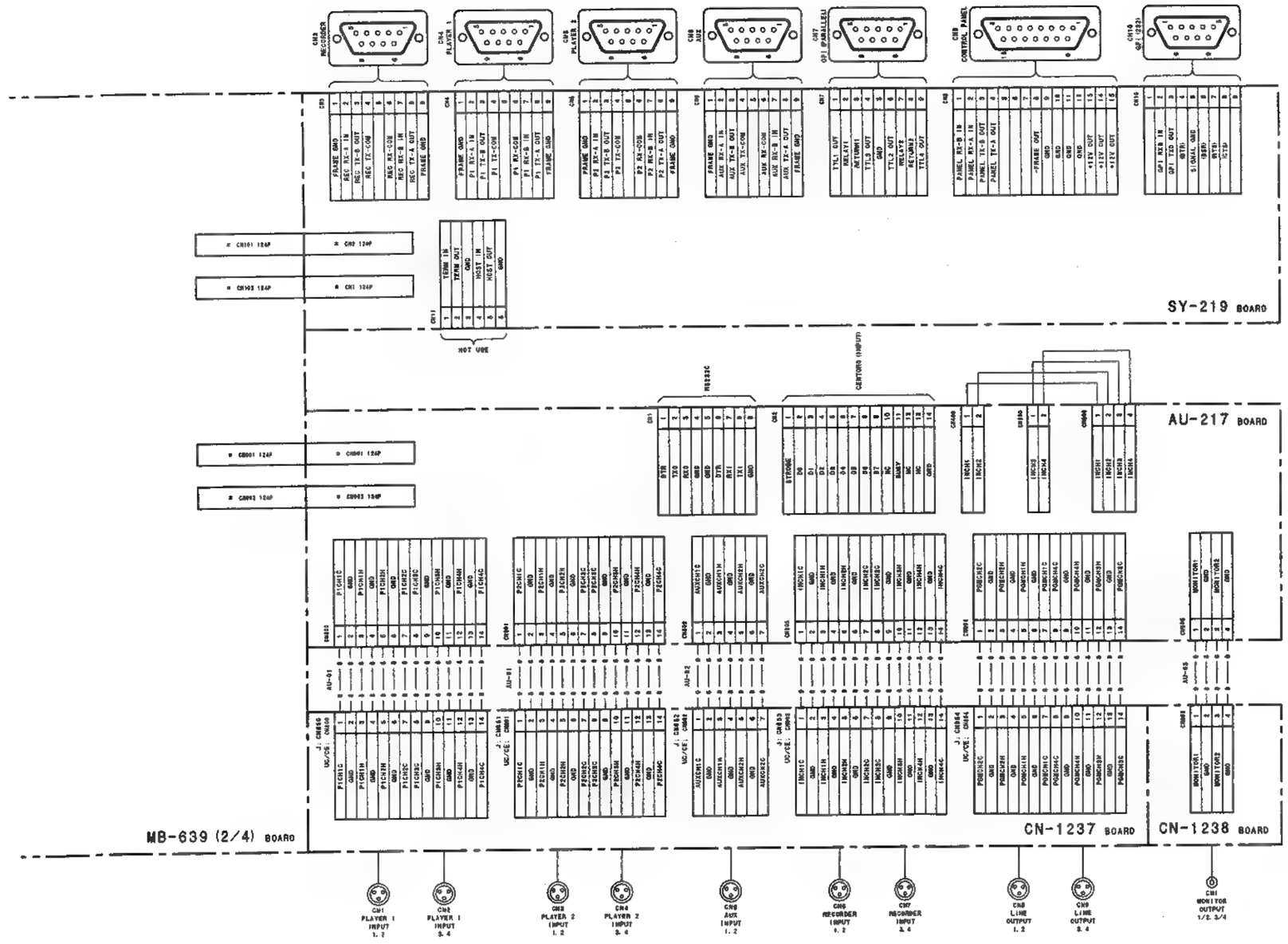

FRAME WIRING (2/4)
MODEL ES-7
B-ES7-FRAME#2

FRAME WIRING (3/4)

FRAME WIR ING (3/4)

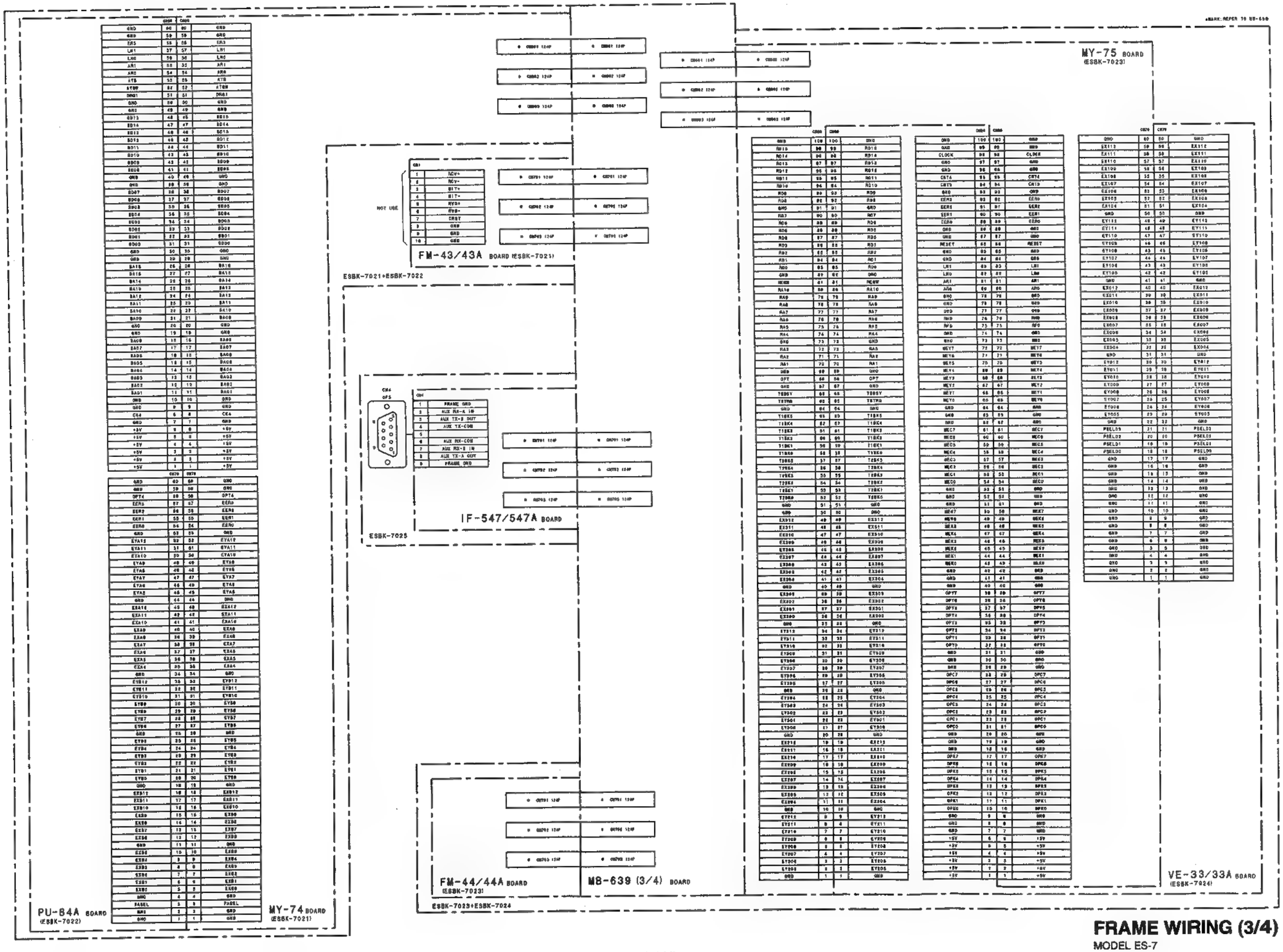

FRAME WIRING (4/4)

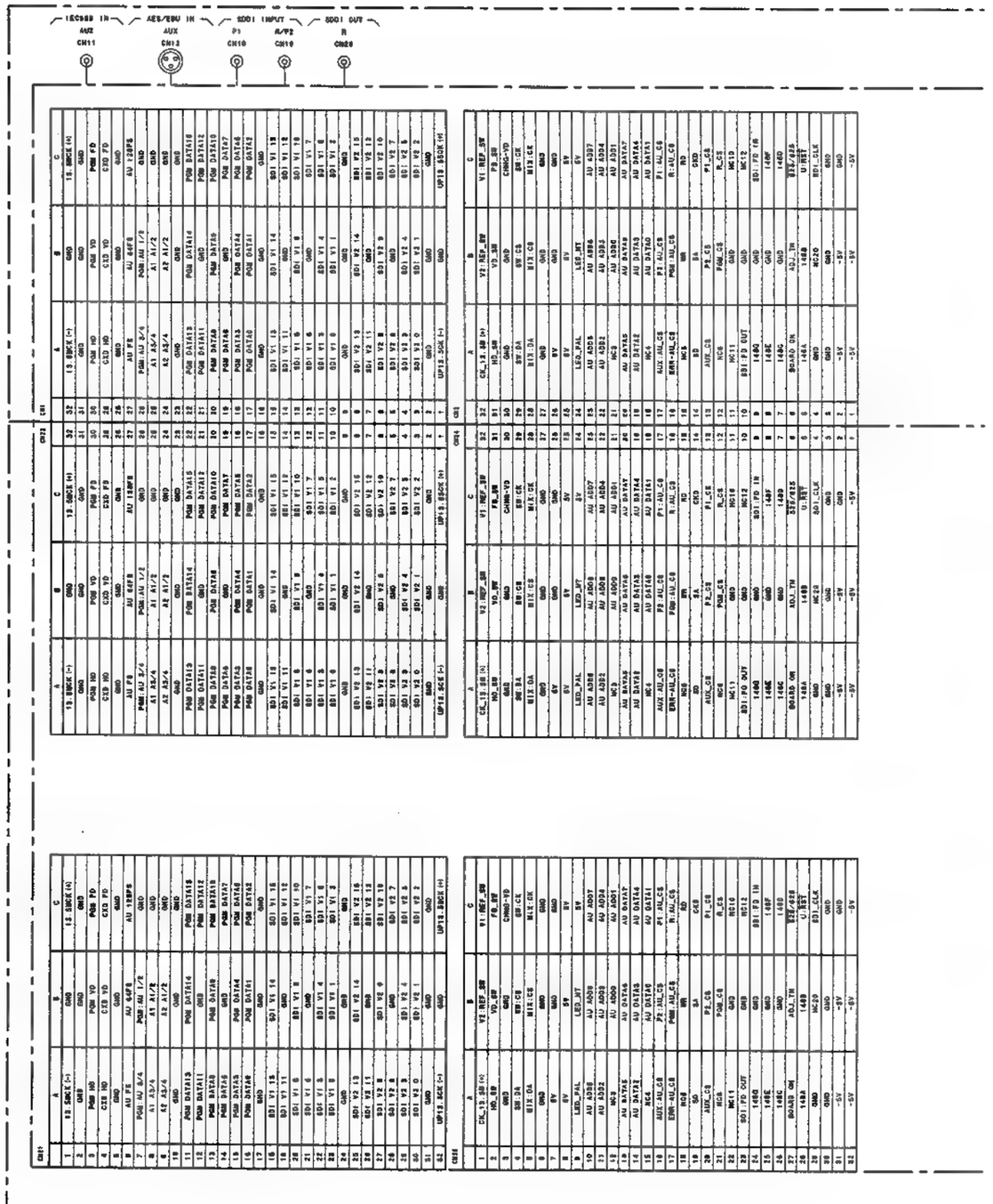

2-228

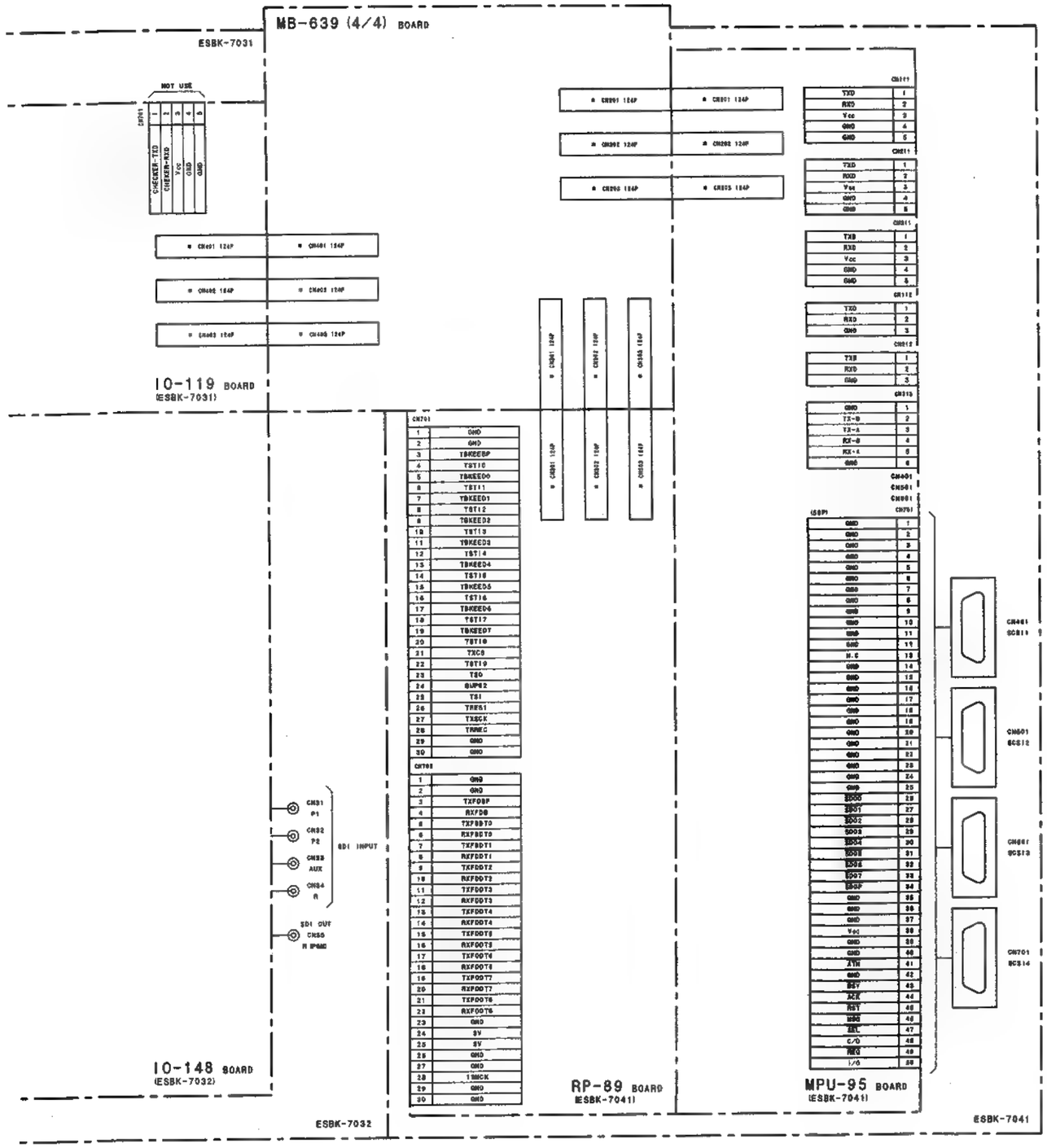

FRAME WIRING (4/4)

MODEL ES-7
B-ES7-FRAME#4

SECTION 3
BOARD LAYOUTS

ES-7 ; EDIT STATION

BOARD NAME	CIRCUIT FUNCTION	PAGE
AU-217	AUDIO MIXER BOARD	3-2
SY-219	SYSTEM CONTROL BOARD	3-4
VPR-18	VIDEO I/O BOARD	3-6
DSC-75/75A	VRAM BOARD	3-8
BF-54	BUFFER BOARD	3-9
RE-122/122A	POWER SUPPLY BOARD	3-10
AD-115/115A	A/D BOARD (VIDEO INPUT)	3-12
DA-95/95A	D/A BOARD (VIDEO OUTPUT)	3-14

ESBK-7021 ; BASIC DME SWITCHER BOARD

BOARD NAME	CIRCUIT FUNCTION	PAGE
FM-43/43A	SWITCHER CONTROL & FRAME SYNCHRONIZER BOARD	3-16
MY-74	MEMORY BOARD	3-18

ESBK-7022 ; 3D EFFECT BOARD FOR BASIC DME SWITCHER

BOARD NAME	CIRCUIT FUNCTION	PAGE
PU-84A	3D EFFECT BOARD	3-20

ESBK-7023 ; ADVANCED DME SWITCHER BOARD

BOARD NAME	CIRCUIT FUNCTION	PAGE
FM-44/44A	SWITCHER CONTROL & FRAME SYNCHRONIZER BOARD	3-22
MY-75	MEMORY BOARD	3-24

ESBK-7024 ; 3D EFFECT BOARD FOR ADVANCED DME SWITCHER

BOARD NAME	CIRCUIT FUNCTION	PAGE
VE-33/33A	3D EFFECT BOARD	3-26

ESBK-7025 ; EXTERNAL SWITCHER BOARD

BOARD NAME	CIRCUIT FUNCTION	PAGE
IF-547/547A	(To be issued as supplement)	—
DAC-20/20A	MONITOR BOARD	3-28

ESBK-7031 ; QSDI INTERFACE BOARD

BOARD NAME	CIRCUIT FUNCTION	PAGE
IO-119	QSDI I/F BOARD	3-30

ESBK-7032 ; SDI INTERFACE BOARD

BOARD NAME	CIRCUIT FUNCTION	PAGE
IO-148	SDI I/F BOARD	3-32

ESBK-7041 ; DISK RECORDER BOARD

BOARD NAME	CIRCUIT FUNCTION	PAGE
MPU-95	DISK UNIT CONTROL BOARD	3-34
RP-89/89A	REC/PLAY BOARD	3-36

ESBK-7071 ; ESDRAW

BOARD NAME	CIRCUIT FUNCTION	PAGE
DAC-20/20A	MONITOR BOARD	3-28

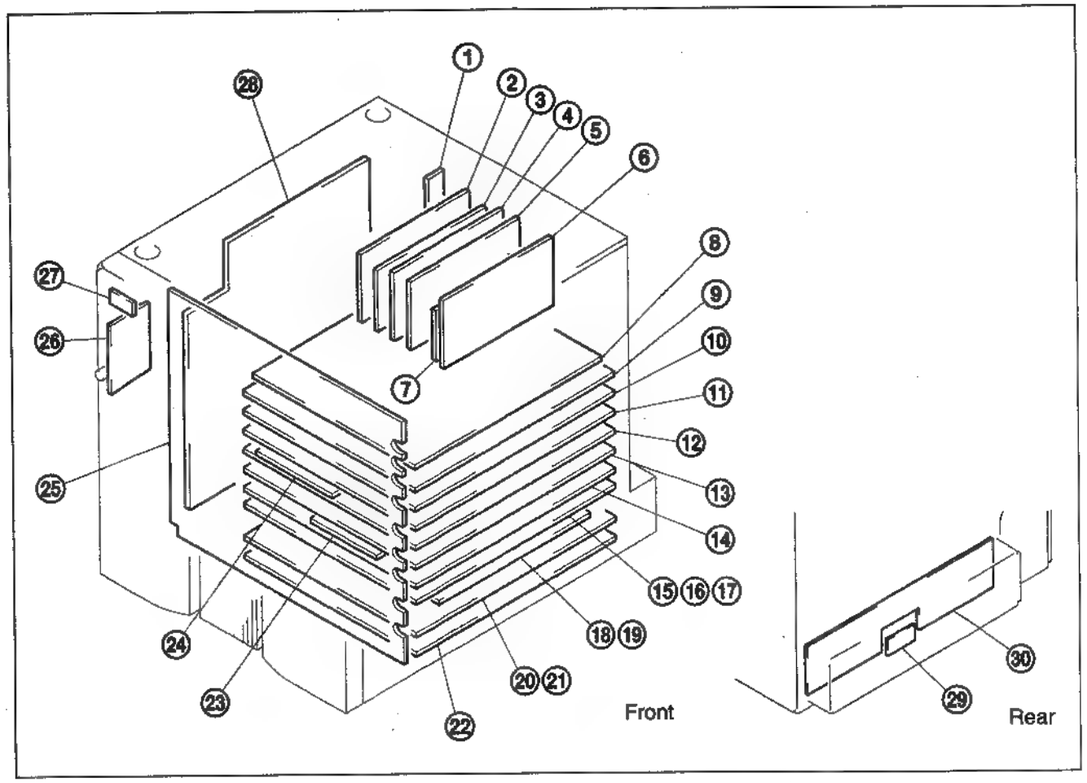

① CN-1242
② SCSI (ESBK-7051)] Not shown in the manual
③ E.TM (ESBK-7052)]
④ BF-54
⑤ VGA Board
⑥ VPR-18
⑦ DSC-75/75A
⑧ PC Main Board (P/I-P55TP4XE) : Not shown in the manual
⑨ SY-219
⑩ MPU-95 (ESBK-7041)
⑪ RP-89/89A (ESBK-7041)
⑫ IO-119 (ESBK-7031)
⑬ AD-115/115A
⑭ DA-95/95A
⑮ FM-43/43A (ESBK-7021)
⑯ FM-44/44A (ESBK-7023)
⑰ IF-547/547A (ESBK-7025)
⑱ PU-84A (ESBK-7022)
⑲ VE-33/33A (ESBK-7024)
⑳ MY-74 (ESBK-7021)
㉑ MY-75 (ESBK-7023)
㉒ AU-217
㉓ DAC-20/20A (ESBK-7025/7071)
㉔ IO-148 (ESBK-7032)
㉕ MB-639]
㉖ FP-74] Not shown in the manual
㉗ LE-154]
㉘ RE-122/122A
㉙ CN-1238] Not shown in the manual
㉚ CN-1237]

AU-217 : AUDIO MIXER BOARD

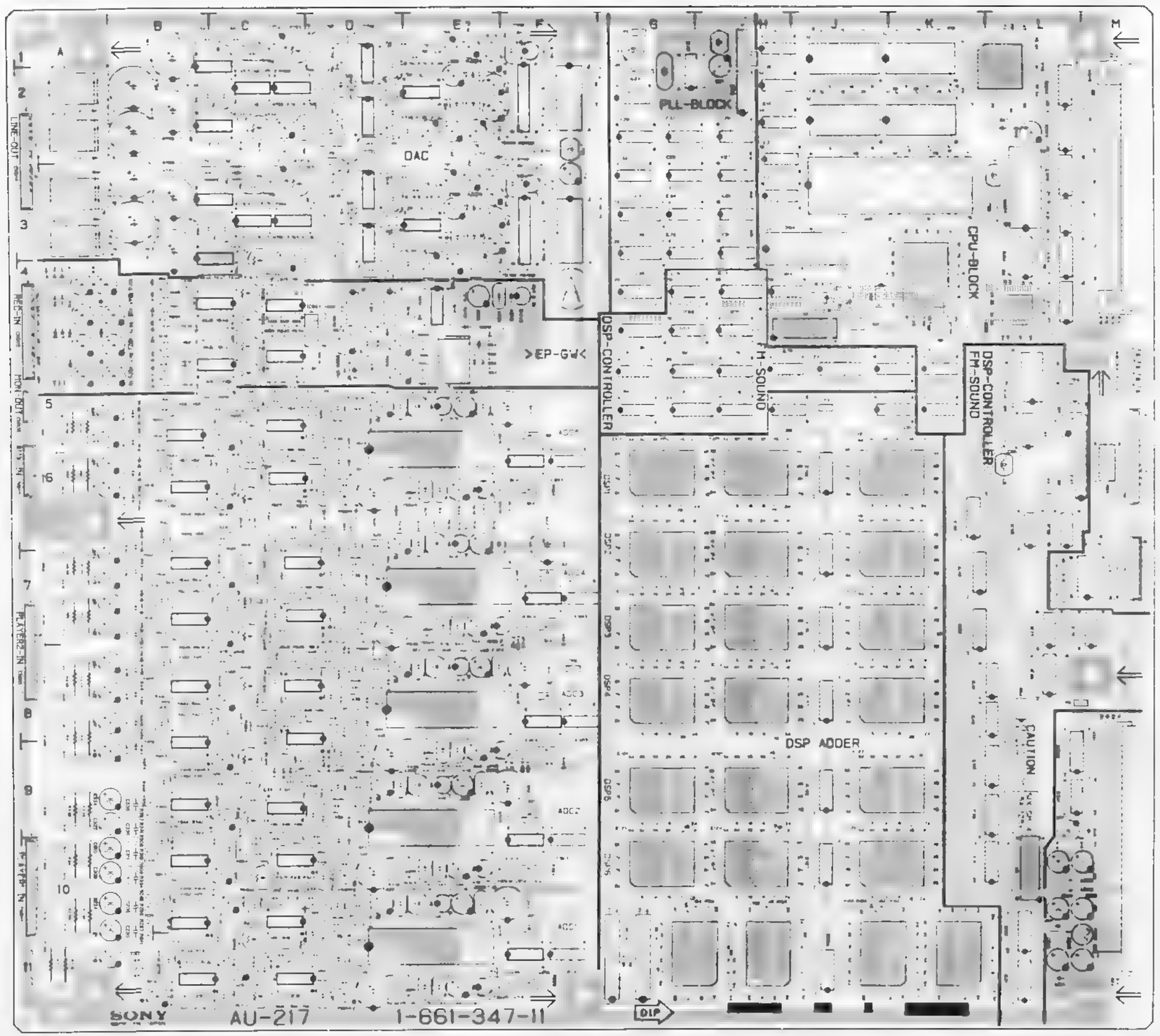

AU-217 (1-661-347-11)

* B SIDE

	CN14	H4		FB202	D10		IC19	M7
	CN15	J3		FB203	D10		IC20	L4
	CN122	L3		FB204	D11		IC21	L3
				FB205	E11		IC22	L3
	CN1	M7	*	FB206	E11		IC23	H2
	CN2	M6	*	FB207	E11		IC24	G2
	CN800	A10	*	FB208	E11		IC25	G3
	CN801	A8		FB209	E11		IC26	G3
	CN802	A6		FB210	D11		IC27	H3
	CN803	A5		FB211	D10		IC28	G2
	CN804	A3	*	FB300	F9		IC29	H2
	CN805	A5	*	FB301	E9		IC30	H3
	CN901	M9		FB302	D9		IC31	H3
	CN903	M2		FB303	D9		IC32	G2
				FB304	D10		IC33	G3
	D1	J4		FB305	E10		IC34	G3
	D2	M5	*	FB306	E9		IC35	G4
	D3	M5	*	FB307	E10		IC36	G3
	D4	M5	*	FB308	E10		IC37	G3
	D5	M5		FB309	E10		IC38	L6
*	D6	G2		FB310	D10		IC39	L6
	D200	A11		FB311	D9		IC40	L8
	D201	A11	*	FB400	F8		IC41	L8
	D202	D11	*	FB401	E8		IC42	G2
	D203	D11		FB402	D8		IC43	L6
*	D204	E11		FB403	D8		IC44	L5
	D205	A10		FB404	D9		IC45	L5
*	D206	E11		FB405	E9		IC46	L8
	D207	A10		FB406	E8		IC48	K6
	D208	E10	*	FB407			IC49	K7
	D209	E11	*	FB408	E6		IC50	K7
	D300	A10		FB409	F9		IC51	
	D301	A10		FB410	D9		IC52	L11
	D302	D10		FB411	D8		IC53	L4
	D303	D9		FB412	C8		IC54	L4
*	D304	E9	*	FB500	F6		IC55	L9
	D305	A9	*	FB501	E6		IC56	L9
*	D306	E9		FB502	D7		IC57	L10
	D307	A9		FB503	D7		IC70	H5
	D308	E9		FB504	D7		IC71	H4
	D309	E10		FB505	E7		IC72	J5
	D400	A9	*	FB506	E7		IC73	H4
	D401	A8	*	FB507	E7		IC74	K5
	D402	D8	*	FB508	E7		IC75	G4
	D403	D6		FB509	F7		IC76	M7
*	D404	E8		FB510	D7		IC77	L7
	D405	A8		FB511	D6		IC78	H5
*	D406	E8		FB512	C6		IC79	H5
	D407	A8	*	FB600	F5		IC81	G5
	D408	E8	*	FB601	E5		IC82	G5
	D409	E9		FB602	D5		IC83	G4
	D500	A7		FB603	D5		IC84	G5
	D501	A7		FB604	D6		IC85	K5
	D502	D7		FB605	E6		IC86	H5
	D503	D7	*	FB606	E5		IC90	G4
*	D504	E7	*	FB607	E6		IC100	G6
	D505	A7	*	FB608	E6		IC101	H6
*	D506	E7		FB609			IC102	K6
	D507	A7		FB610	D6		IC103	G7
	D508	E7		FB611	D5		IC104	H7
	D509	E7		FB700	E3		IC105	
	D600	A6		FB701	F3		IC106	J6
	D601	A6		FB702	F4		IC107	J7
	D602	D6		FB703	F4		IC110	G7
	D603	D6		FB704	E4		IC111	H7
*	D604	E5		FB705	E1		IC112	
	D605	A5		FB706	F1		IC113	G8
*	D606	E5		FB707	F2		IC114	H8
	D607	A5		FB708	F2		IC115	K8
	D608	E5		FB709	E2		IC116	J7
	D609	E6					IC117	J8
	D700	A3		F900	M10		IC120	G9
	D701	A3					IC121	H9
	D702	A2		IC1	K4		IC122	K9
	D703	A2		IC2	H3		IC123	G10
	D704	F3		IC3	H2		IC124	H10
	D705	F1		IC4	H4		IC125	K10
	D800	A5		IC5	J3		IC126	J9
	D801	A5		IC6	J2		IC127	J10
	D802	A5		IC7	K2		IC130	K11
	D803	A4		IC8	J1		IC131	J11
	D804	A4		IC9				
	D805	A4		IC10	L2		IC133	G11
	D806	A4		IC11	L4		IC134	J11
	D807	A4		IC12	K5		IC135	G11
	D808	E4		IC13	K5		IC136	G11
	D809	F4		IC14	H4		IC200	E10
	D810	D5		IC15	H2		IC201	B11
				IC16	H2		IC202	D11
*	FB200	F10		IC17	H1		IC203	F11
*	FB201	E10		IC18	J4		IC204	F11

AU-217
PART NO. 1-661-347-11
MODEL ES-7
-A SIDE-

IC209	B10	L906	M9
IC212	E11		
IC300	E9	Q200	D11
IC301	B10	Q201	E11
IC302	D10	Q202	C11
IC303	F10	Q203	C10
IC304	F10	Q204	F11
IC308	D10	Q205	F10
IC309	B9	Q300	D10
IC310	C9	Q301	E10
IC312	E10	Q302	C10
IC400	E8	Q303	C9
IC401	B8	Q304	F10
IC402	D8	Q305	F9
IC403	F8	Q400	E9
IC404	F8	Q401	E9
IC405	D8	Q402	C8
IC409	B8	Q403	C8
IC410	D8	Q404	F9
IC412	E9	Q405	F8
IC500	E6	Q406	C9
IC501	B7	Q407	C8
IC502	D7	Q408	C8
IC503	F7	Q409	C8
IC504	F7	Q500	E7
IC508	D7	Q501	E7
IC509	B7	Q502	C7
IC510	D7	Q503	C7
IC512	E7	Q504	F7
IC600	E5	Q505	F7
IC601	B6	Q506	C7
IC602	C6	Q507	C7
IC603	F6	Q508	C6
IC604	F6	Q509	C6
IC608	D6	Q600	D6
IC609	B5	Q601	E6
IC610	D5	Q602	C6
IC612	E6	Q603	C5
IC700	C3	Q604	F6
IC701	F3	Q605	F5
IC702	E3	Q701	F2
IC703	B4	Q702	E2
IC704	D3	Q801	F4
IC705	F3	Q802	E4
IC706	F3		
IC707	B3	RB1	K4
IC708	D3	RB2	J4
IC709	C2	RB3	M6
IC710	F1	RB4	L8
IC711	E2		
IC712	B2	RV200	C11
IC713	D2	RV201	C11
IC714	F2	RV300	C10
IC715	F2	RV301	C9
IC716	B2	RV400	C9
IC717	D1	RV401	C8
IC718	G5	RV500	C7
IC719	C3	RV501	C7
IC720	C2	RV600	C6
IC800	C4	RV601	C5
IC801	C4	RV700	C4
IC802	C4	RV701	C3
IC803	C4	RV702	C2
IC805	E4	RV703	C1
IC806	D4	RV800	C5
IC807	D4	RV801	C4
IC808	F4	RV802	C4
IC809	D5	RV803	C4
IC900	L9		
IC901	L9	RY700	A3
IC902	L3	RY701	A3
IC903	L2	RY702	A2
IC904	L2	RY703	A2
		RY800	E4
L1	H1		
L2	L3	SW1	J4
L3	G1		
L4	L5	TP1	H1
L5	L6	TP2	G1
L200	E10	TP3	J5
L300	E9	TP4	L5
L400	E8	TP5	L8
L500	E6	TP6	F8
L600	E5		
L700	F2	X1	H4
L900	L10	X2	G2
L901	L11	X3	L10
L903	L10		
* L904	L10		

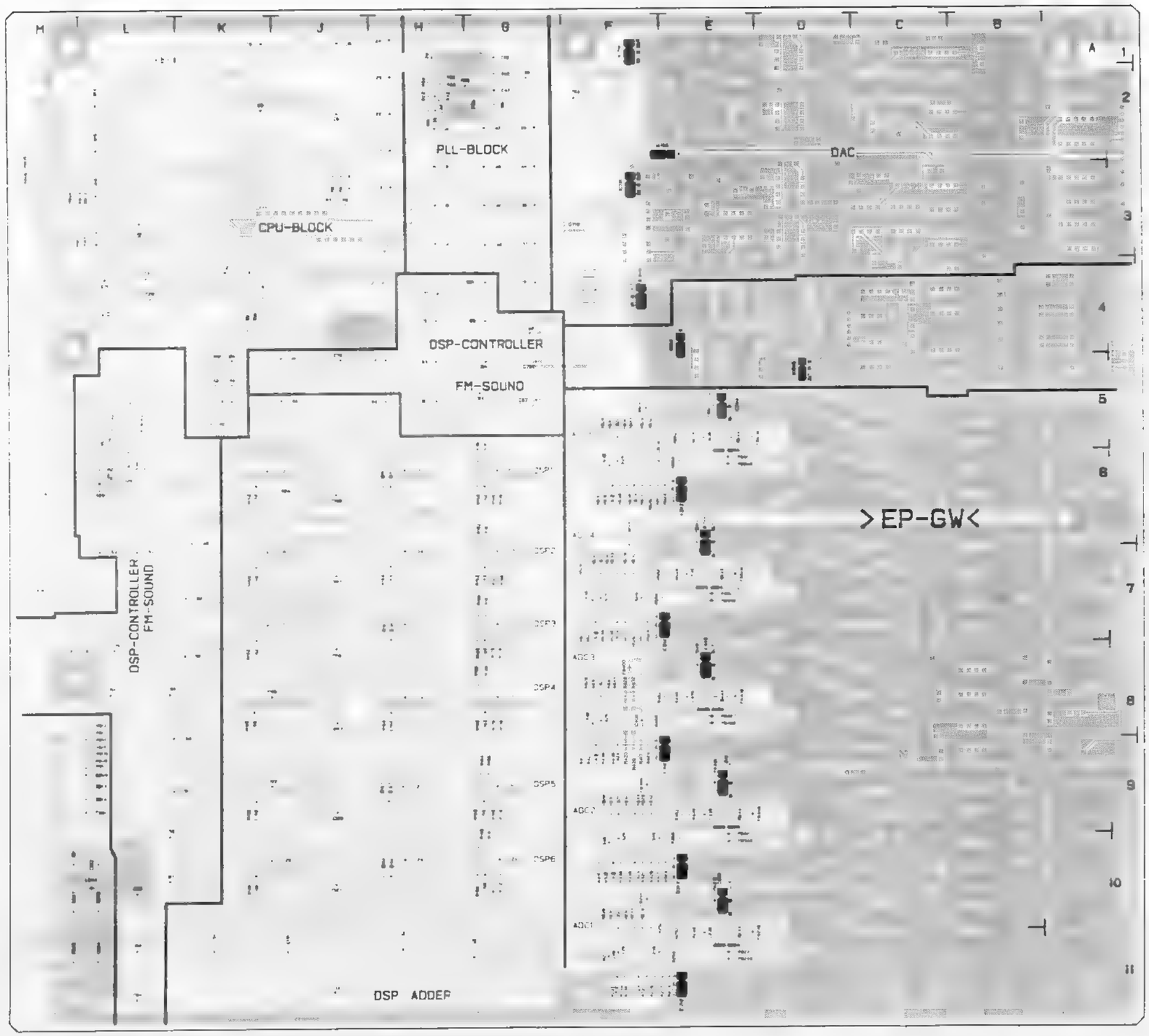

AU-217
PART NO 1-661-347-11
MODEL ES-7
-B SIDE-

SY-219 : SYSTEM CONTROL BOARD

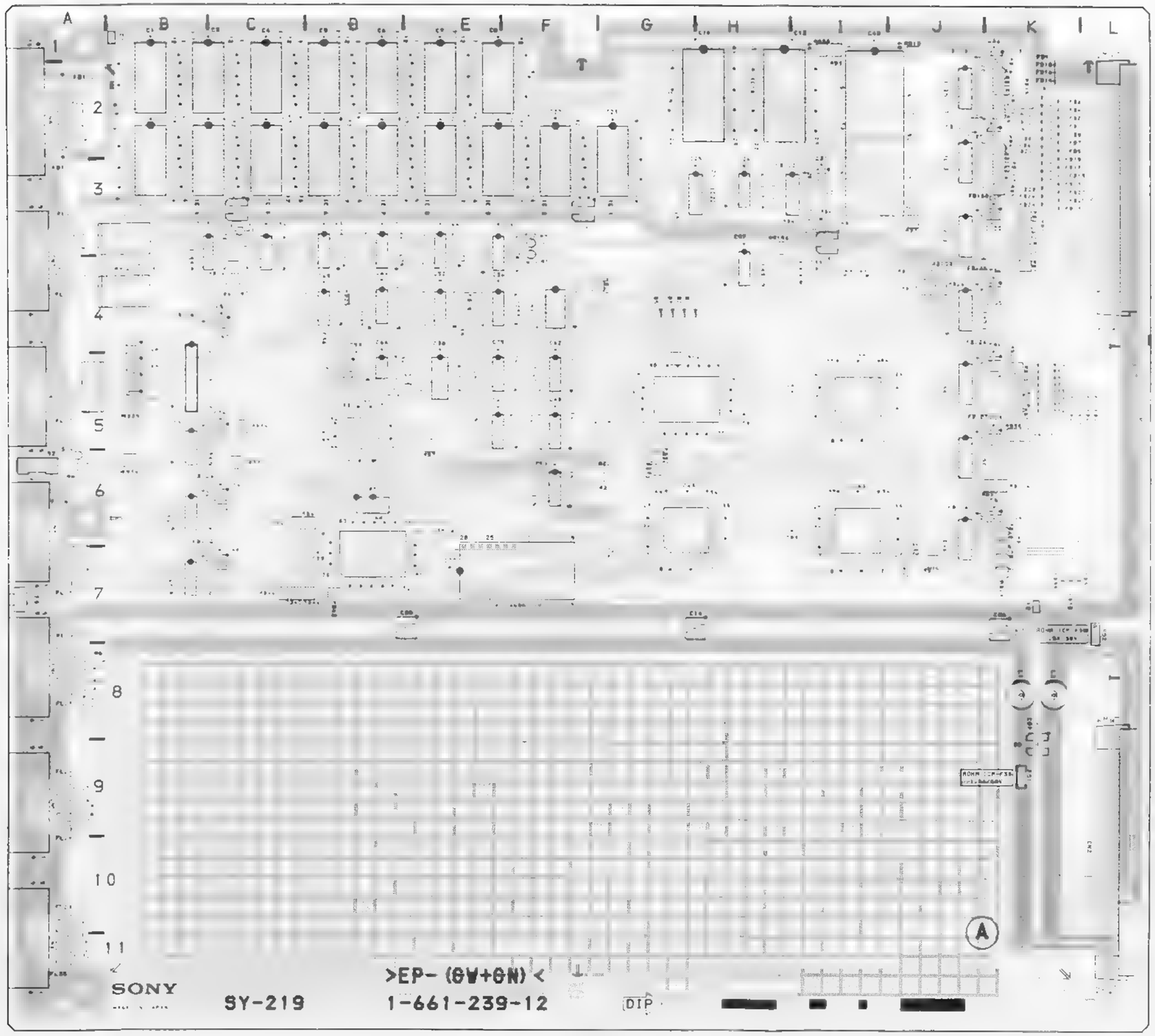

SY-219 (1-661-239-12)

* : B SIDE

CN111	I1	FL12	A5
CN156	E7	FL13	A5
		FL14	A6
CN1	L2	FL15	A7
CN2	L9	FL16	A7
CN3	A7	FL17	A7
CN4	A11	FL18	A7
CN5	A9	FL19	A8
CN6	A8	FL20	A8
CN7	A4	FL21	A8
CN8	A2	FL22	A8
CN10	A5	FL23	A8
CN11	A5	FL24	A9
		FL25	A9
D4	E5	FL26	A9
D6	C4	FL27	A9
D7	C4	FL28	A9
D8	B4	FL29	A10
		FL30	A10
E1	B1	FL31	A11
E2	K7	FL32	A11
		FL33	A11
FB1	K2		
FB2	K2	IC7	E2
FB3	K2	IC8	E2
FB4	K2	IC10	H2
FB5	K2	IC11	I1
FB6	K2	IC12	J3
FB7	K2	IC13	J3
FB8	K2	IC20	F3
FB9	K2	IC21	G3
FB10	K2	IC22	H3
FB11	K2	IC23	H3
FB12	K2	IC24	I3
FB13	K3	IC25	J2
FB14	K3	IC26	E3
FB15	K3	IC27	C3
FB16	K3	IC28	D3
FB17	K3	IC29	D3
FB18	K3	IC30	E3
FB19	K2	IC31	G5
FB20	K2	IC32	B4
FB21	K2	IC33	C3
FB22	K2	IC34	D5
FB23	K3	IC35	E4
FB24	K3	IC36	D4
FB25	K3	IC37	D4
FB26	K3	IC38	J5
FB27	K3	IC39	B6
FB28	K3	IC40	E5
FB29	K5	IC41	F5
FB30	K5	IC42	F5
FB31	K5	IC43	H4
FB32	K5	IC44	I5
FB33	K5	IC45	J4
FB34	K5	IC46	J6
FB35	K5	IC47	B7
FB36	K5	IC48	D7
FB37	K7	IC49	G6
FB38	K7	IC50	J6
FB39	K7	IC51	F6
FB40	K5	IC52	E5
FB41	L5	IC53	I6
FB42	L5	IC54	B5
FB43	K5	IC55	D5
FB100	J3	IC56	E7
FB101	J2	IC57	E4
FB102	I3		
FB103	J1	L1	K8
FB104	J4	L2	K8
FB105	J4		
FB106	J6	PS1	K9
FB107	J5	PS2	L7
FB108	B4		
FB109	B6	RB1	K4
FB110	B7	RB2	K3
FB111	B5	RB3	I1
FB112	A2	RB4	K2
FB113	A2	RB5	K3
		RB6	I3
FL1	A2	RB7	E5
FL2	A2	RB9	J7
FL3	A2	RB10	J1
FL4	A2	RB11	I3
FL5	A2	RB12	J7
FL6	A3	RB13	G4
FL7	A3	RB15	K2
FL8	A3	RB16	K2
FL9	A4	RB17	K2
FL10	A4	RB18	B3
FL11	A5	RB19	E4

SY-219
PART NO 1-661-239-12
MODEL ES-7
-A SIDE-

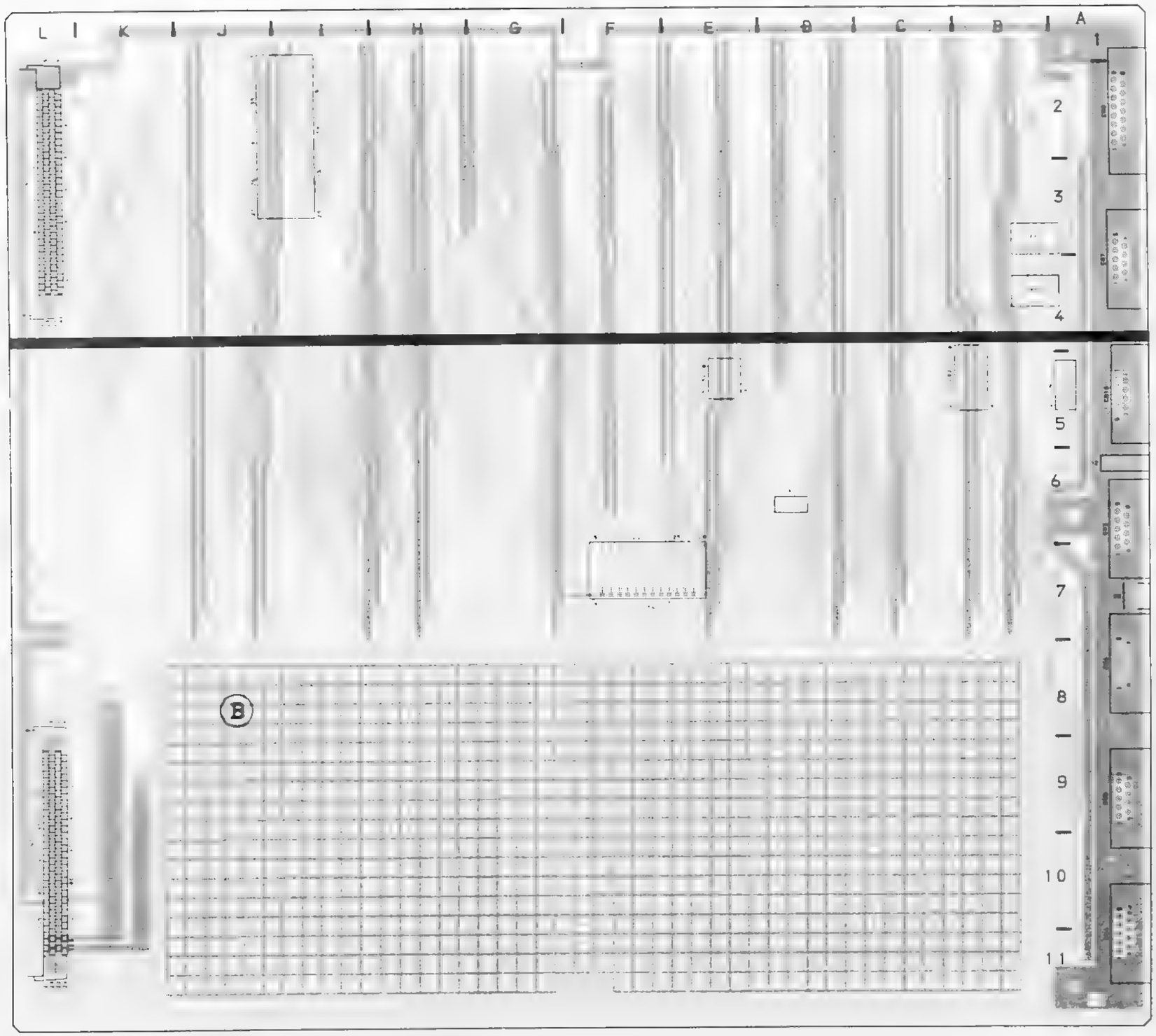

SY-219
PART NO 1-661-239-12
MODEL ES-7
-B SIDE-

RE-122/122A : POWER SUPPLY BOARD

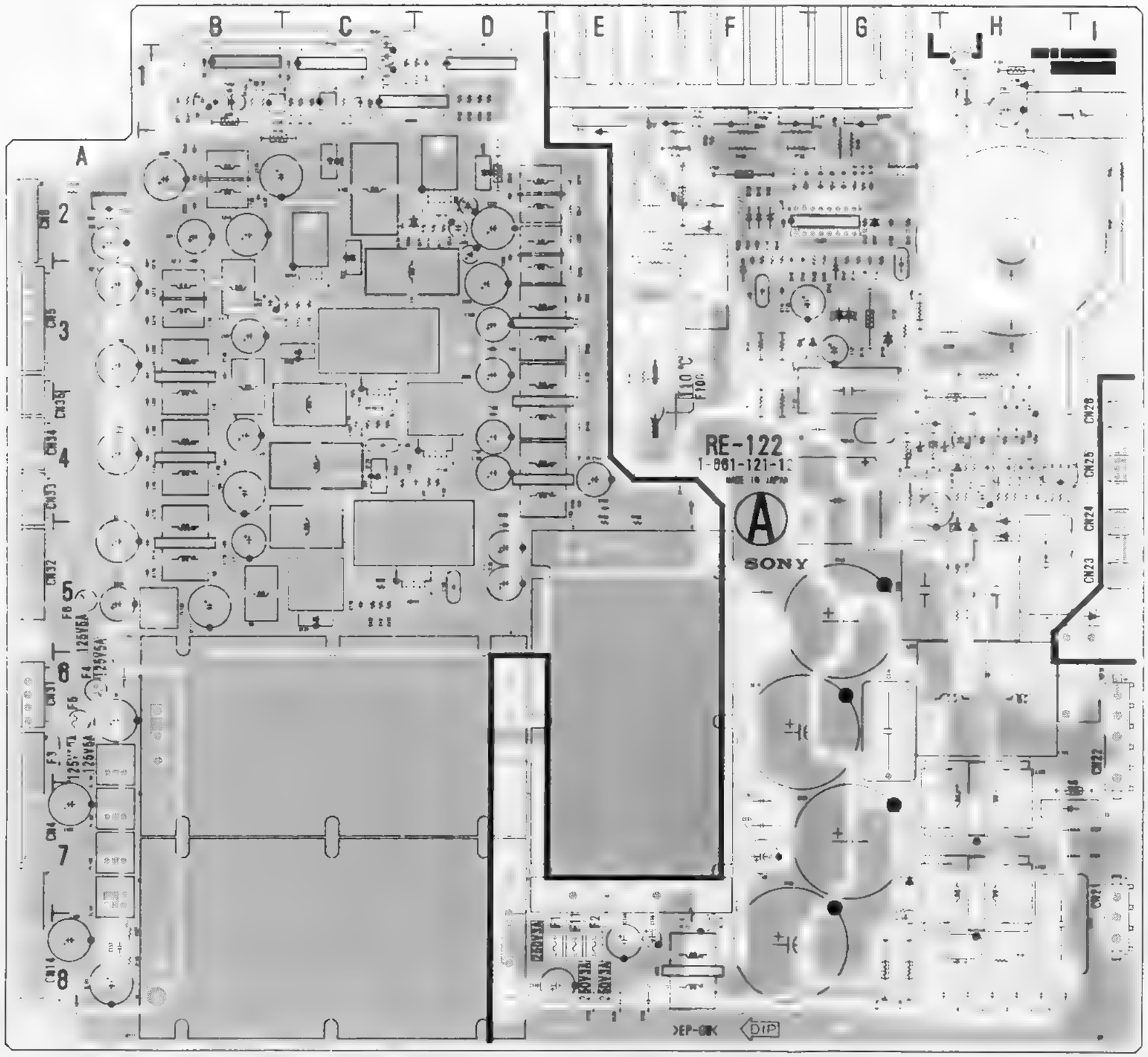

RE-122/122A
PART NO 1-661-121-12
MODEL ES-7
-A SIDE-

RE-122/122A (1-661-121-12)

• : B SIDE

CNI109	F2	IC122	H4
CN4	A7	L100	H8
CN5	A3	L101	H7
CN6	A2	L102	H6
CN14	A8	L104	F8
CN21	I8	L106	E4
CN22	I6	L107	C4
CN23	I5	L108	B5
CN24	I5	L109	B5
CN25	I4	L110	E4
CN26	I4	L111	C4
CN31	A6	L112	B4
CN32	A5	L113	E3
CN33	A4	L114	C4
CN34	A4	L115	B3
CN35	A4	L116	B4
		L117	E3
D10	H4	L118	C3
D100	H1	L119	B3
D101	G5	L120	B3
D102	G3	L121	E2
D103	G3	L122	C2
D104	F3	L123	B2
D105	G3		
D107	E1	Q100	C1
D108	F2	Q101	C1
D110	G8	Q102	E1
D111	H5	Q103	F1
D112	H4	Q104	F1
D113	H5	Q105	G1
D114	H5	Q106	H4
D115	I5	Q110	H4
D116	F2	Q111	H4
D117	G2	Q112	H4
D118	G3	Q113	H4
D119	F3	Q114	H4
D120	F3	Q115	H4
D121	G4		
D122	F2	RY100	I5
D123	F2	RY101	F2
D124	C5		
D125	C4	VDR100	H8
D126	C3	VDR101	G4
D127	C3		
D128	[illegible]		
D129	C2		
D130	C2		
D131	H1		
D132	B1		
D133	G3		
D134	G7		
D135	H4		
D136	H4		
D137	H4		
FL101	A7		
FL102	A7		
FL103	A7		
FL104	A6		
FL105	B5		
F1	E8		
F2	E8		
F3	A5		
F4	A6		
F5	A6		
F6	A5		
F11	E8		
F100	E3		
IC101	B1		
IC103	D1		
IC104	C1		
IC105	H1		
IC106	B1		
IC107	C1		
IC108	C1		
IC109	F2		
IC110	F8		
IC111	D8		
IC112	D7		
IC113	E7		
IC114	C5		
IC115	D4		
IC116	C4		
IC117	C3		
IC118	D2		
IC119	A2		
IC120	B1		
IC121	B1		

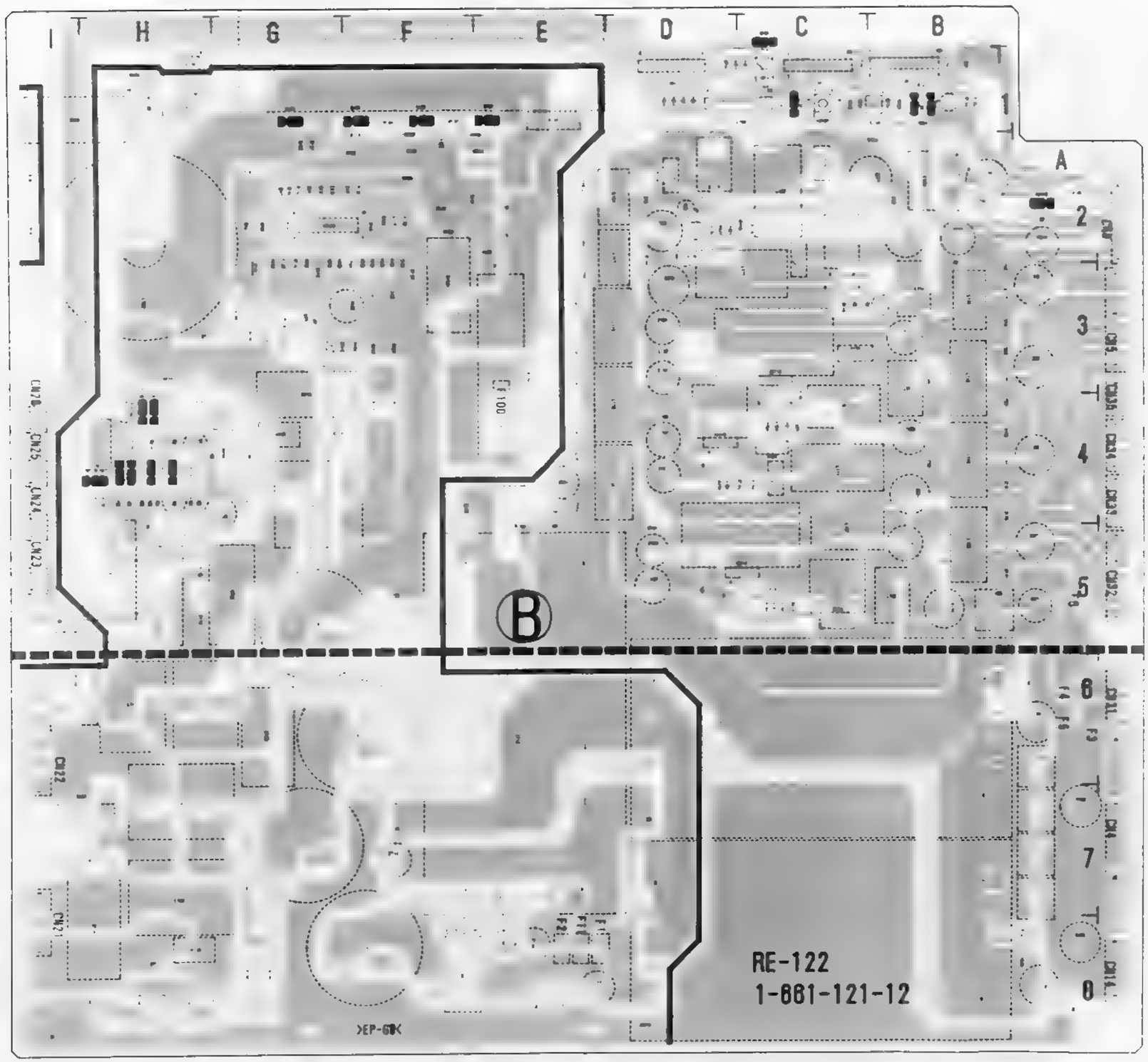

RE-122/122A
PART NO 1-661-121-12
MODEL ES-7
-B SIDE-

AD-115/115A : A/D BOARD (VIDEO INPUT)

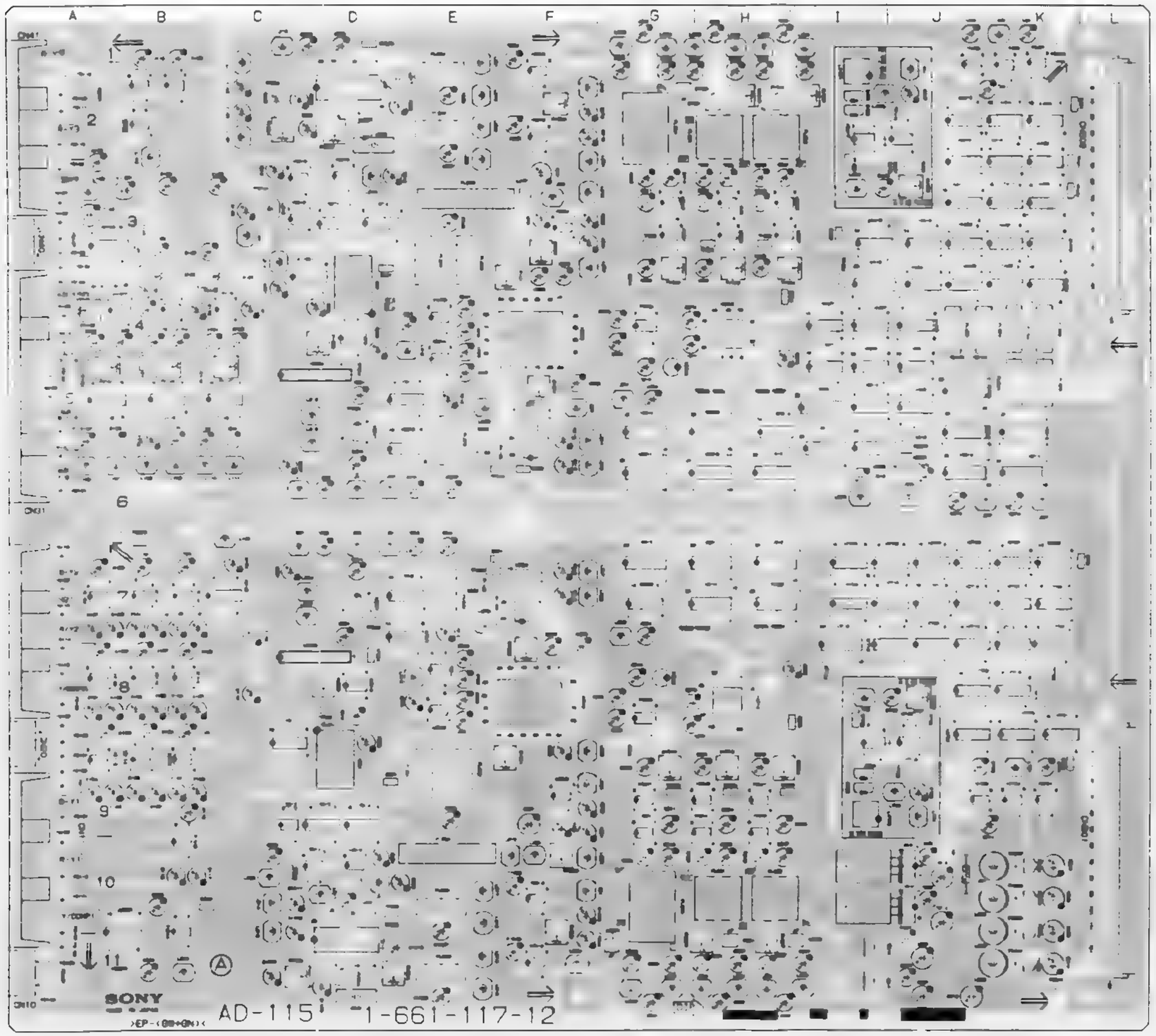

AD-115/115A (66

B SIDE

CN10	A	FL501	E9	IC505			
CN11	A	FL502	E9	IC506			
CN20	A	FL503	E10	IC507			
CN21	A	FL504	E10	IC508			
CN31	A	FL505	E11	* IC509			
CN40	A	FL600	G10	IC510			
CN41	A	FL601	H10	IC511			
CN501		FL602	H10	IC512			
CN503		FL603	K5	IC513			
		FL604	K5	IC514			
CV200		FL700	K4	IC515			
CV500				IC516			
		IC100	B7	IC517			
* D200		IC101	B9	IC518			
* D201		IC102	B8	IC519			
* D202		IC103	B10	IC520			
* D203		IC104	A7	IC600			
* D204		IC105	B7	IC601			
* D400		IC106	B5	IC602			
* D401		IC107	B4	IC603			
* D402		IC108	A5	IC604			
D404		IC109	A8	IC605			
D405		IC110	B8	IC606			
* D500		IC111	B4	IC607			
* D501		IC112	B5	IC608			
* D502		IC113	A9	IC609			
* D503		IC114	B9	IC610			
* D504		IC115	C4	IC611			
* D700		IC116	C5	IC612			
* D701		IC117	B2	IC613			
* D702		IC118	B2	IC614			
D704		* IC119	C2	IC615			
D705		IC120	B2	IC616			
		IC125	C7	IC700			
E100	*	IC200	C5				
E101	*	IC201	F5				
E102	*	IC202	F4				
E200	*	IC203	E4				
E201	*	IC204	E5				
E300	*	* IC205	C4				
E400	*	IC206	F3				
E401	*	IC207	D5				
E500	*	IC208	E5				
E501	*	IC209	D4				
E600	*	IC210	D4				
E700	*	IC211	E5				
E701	*	IC212	C3				
EB00		IC213	C3				
		IC214	D3				
FB100	A	IC215	D3				
FB101	A	IC216	D3				
FB102	A	IC217	D2				
FB103	A	IC218	F2				
FB104	A	IC219	F2				
FB105	A	* IC222	D3				
FB106	A	(AD-115A ONLY)					
FB107	A	IC300	G3				
FB108	A	IC301	G3				
FB109	A	IC302	G5				
FB110	A	IC303	G4				
FB111	A	IC304	H3				
FB112	A	IC305	H3				
FB113	A	IC306	H3				
FB114	A	IC307	H3				
FB115	A	IC308	H5				
FB116	A	IC309	H5				
FB117	A	IC310	G5				
FB118	A	IC311	G6				
FB119	A	IC312	H5				
FB120	A	IC313	J6				
FB121	A	IC314	H4				
FB122	A	IC315	H6				
FB123	A	IC316	J5				
FB124	A	IC400	K2				
FB125	A	IC401	K2				
FB126	A	IC402	J2				
FB127	A	IC403	K2				
FB128	A	IC404	K2				
FB129	A	IC405	J4				
FB130	A	IC406	J5				
FB131	A	IC407	I4				
FB132	A	IC408	J5				
FB133	A	IC409	K3				
FB134	A	IC410	K3				
FB135	A	IC411	J3				
FB136	A	IC412	J3				
FB137	A	IC413	J3				
FB804	*	IC414	K3				
FB805	*	IC415	J2				
FB806	*	IC416	J2				
FB807	*	IC417	I2				
FB808	*	IC418	I4				
FB809	*	IC419	I3				
		IC420	K3				
FL200		IC421	K3				
FL201		IC422	K3				
FL202		IC423	J3				
FL203		IC424	K4				
FL204		IC425	K4				
FL205		IC426	J4				
FL300		IC427	J4				
FL301		IC434	J4				
FL302		IC435	J5				
FL303		IC501	F7				
FL304		IC502	F8				
FL400		IC503	E8				
FL500		IC504	E8				

AD-115/115A
PART NO 1-661-117-12
MODEL ES-7
-A SIDE-

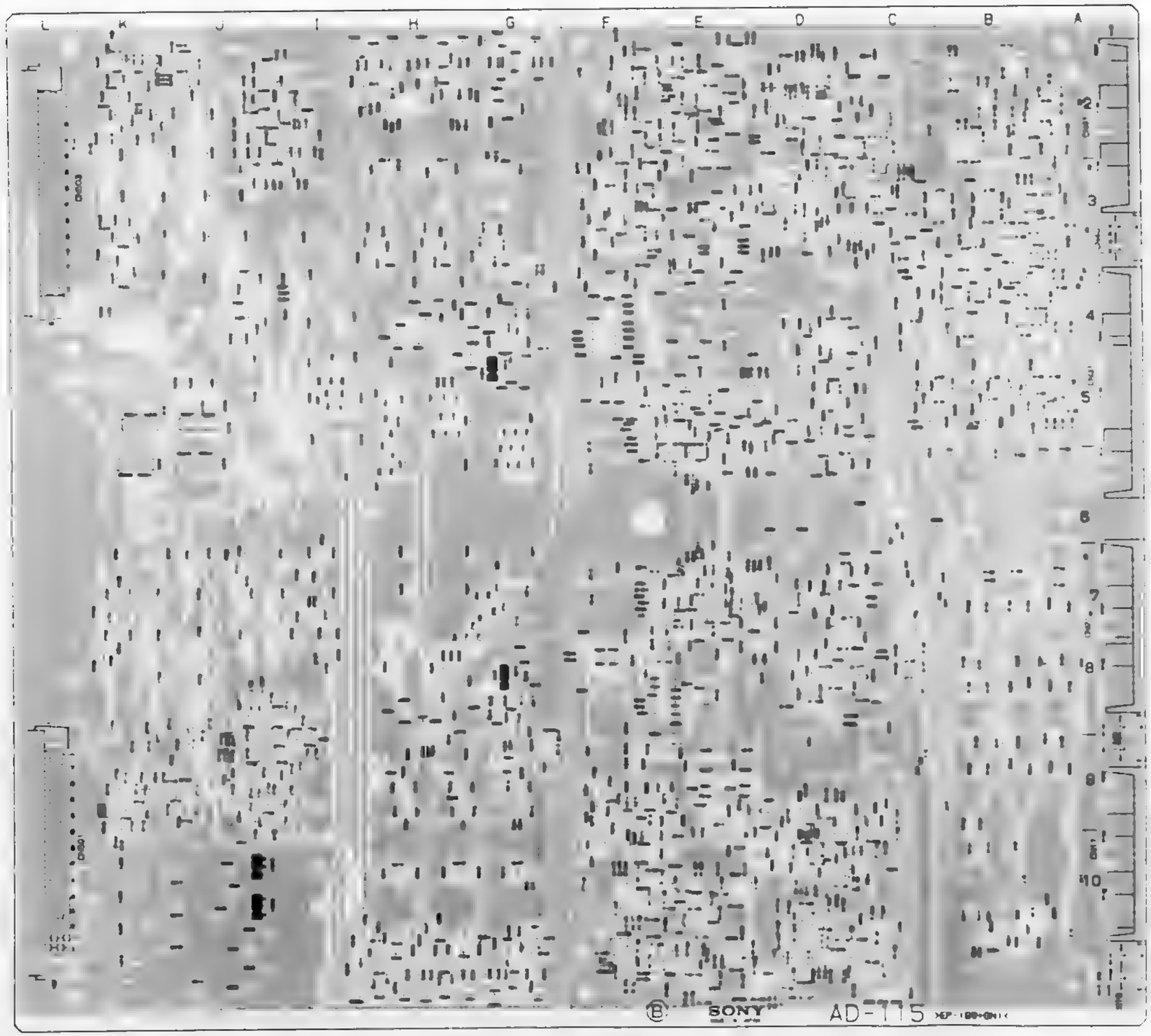

3 13 3 13

AD-115/115A
PART NO. 1-661-117-12
MODEL ES-7
-B SIDE-

DA-95/95A : D/A B OARD (VIDEO OUTPUT)

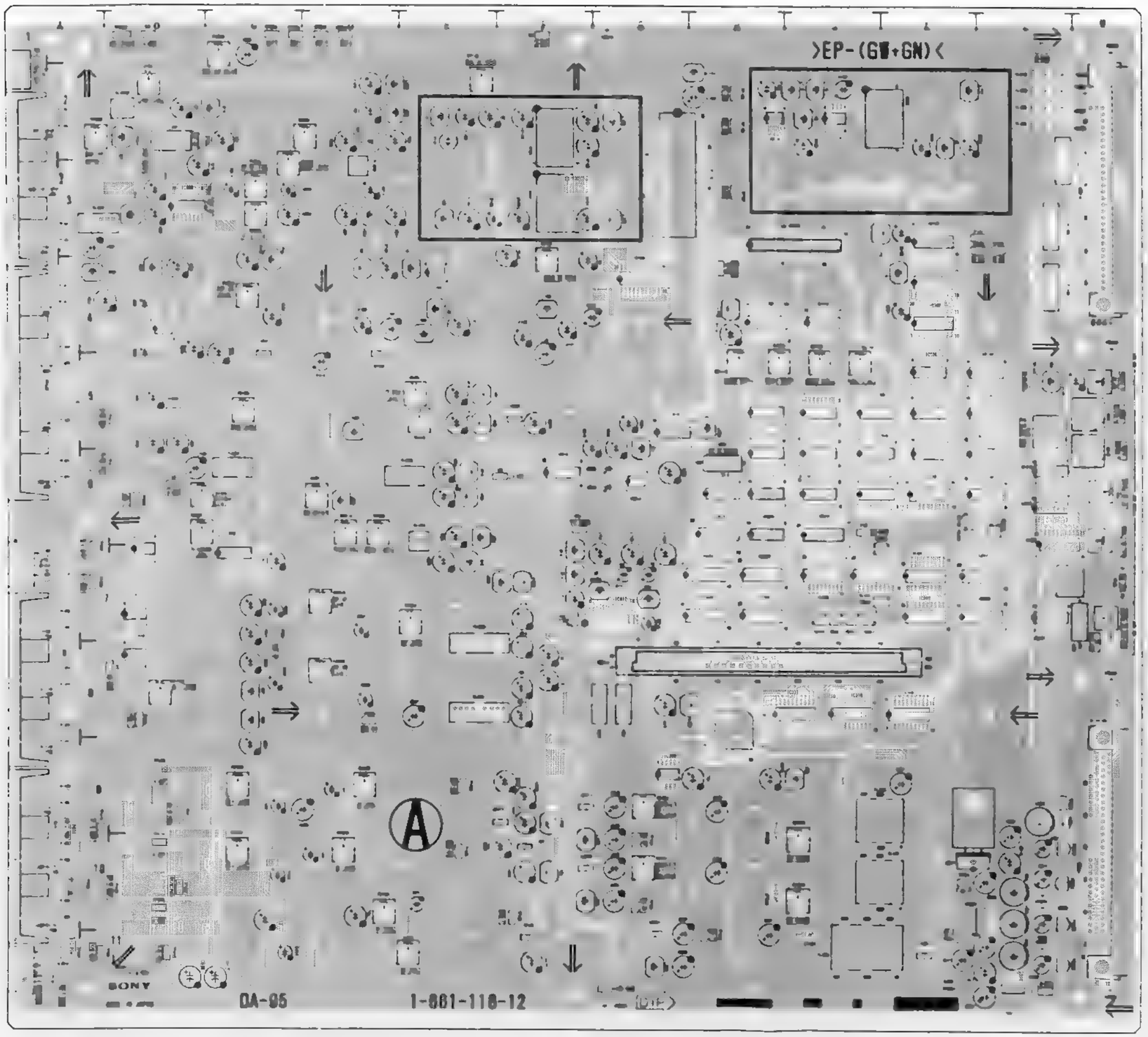

DA-95/95A (1-661-118-12)

* : B SIDE

CN1124	H3		FL802	*		IC409	*		
			FL803	*		IC410			
CN514	G8		FL804	*		IC411			
CN531	A11		FL806	*		IC412			
CN532	A9		FL808	*		IC600			
CN533	A7		FL810	*		IC601			
CN534	A7					IC602			
CN535	A4		IC100			IC603			
CN536	A2		IC101			IC604			
CN611	L9		IC102			IC605			
CN613	L2	*	IC103			IC606			
		*	IC104			IC607			
* D100	H4	*	IC105			IC608			
* D101	I4	*	IC106			IC609			
* D300	J11	*	IC107			IC610			
* D301	J10		IC108			IC611			
* D302	J9	*	IC109			IC612			
* D400	E11		IC110			IC613			
* D401	D10	*	IC111			IC614			
* D402	D9	*	IC112			IC615			
* D403	B6	*	IC113			IC616			
* D602	F5		IC114			IC617			
* D603	F8		IC115			IC618			
* D604	F8	*	IC116			IC619			
* D800	C4	*	IC117			IC800			
			IC118			IC801			
E1	K1		IC119			IC802			
E2	B8	*	IC121			IC803			
E3	B1	*	IC122			IC804			
E4	F1	*	IC123			IC805			
E5	B6		IC124			IC806			
E6	E6		IC125			IC807			
E7	K11		IC126			IC808			
E8	B11		IC128			IC900			
E9	G11		IC129			IC901			
E10	I8		IC130			IC902			
			IC131						
FB800	K2		IC132	*		L100			
FB801	K2		IC133			L101			
FB802	K2		IC134			L102			
FB803	K2		IC135			L103			
FB901	G11		IC136	*		L104			
FB902	L11		IC137			L105			
FB903	K10		IC138	*		L106			
FB904	K10		IC139			L107			
FB905	L8		IC140	*		L108			
FB906	L4		IC141			L109			
FB907	K11		IC142			L111			
FB908	L1	*	IC143			L112			
FB909	K9		IC144	*		L113			
FB910	G1	*	IC145			L114			
		*	IC147	*		L115			
FL100	K3		IC148			L116			
FL101	A2		IC300	*		L117			
FL102	A2		IC301			L118			
FL103	K2		IC302			L119			
FL104	K4		IC303	*		L300			
FL300	I11		IC304	**		L301			
FL301	I10		IC305			L302			
FL302	I9		IC306			L304			
FL400	A7		IC307			L306			
FL401	A3		IC308	**		L400			
FL402	A7		IC309	*		L402			
FL403	A3		IC310	*		L406			
FL404	A5		IC311	*		L407			
FL405	A5		IC312	*		L408			
FL406	A9		IC313			L600			
FL407	A9	*	IC314			L601			
FL408	A5	*	IC315			L602			
FL409	A5	*	IC316	**		L603			
FL410	A8	*	IC317			L604			
FL411	A9	*	IC318	**		L605			
FL412	A4	*	IC319			L606			
FL413	A4		IC320			L607			
FL414	A8		IC321			L608			
FL415	A8		IC322			L609			
FL600	F7		IC323	**		L610			
FL601	F8		IC324	*		L611			
FL602	C6		IC325	**		L612			
FL603	E6		IC326			L613			
FL604	E6		IC327			L614			
FL605	A10		IC328	**		L800			
FL606	A10	*	IC400	B10		L801			
FL607	A10	*	IC401	**		L803			
FL608	A10	*	IC402	**		L804			
FL611	A7	*	IC403	B10		L805			
FL614	A11	*	IC404	B10		L806			
FL615	A6	*	IC405	B10		L807			
FL616	A6	*	IC406	B9		L808			
FL800	D3	*	IC407	B9		L809			
FL801	B2	*	IC408	B9		L810			

DA-95/95A
PART NO 1-661-118-12
MODEL ES-7
-A SIDE-

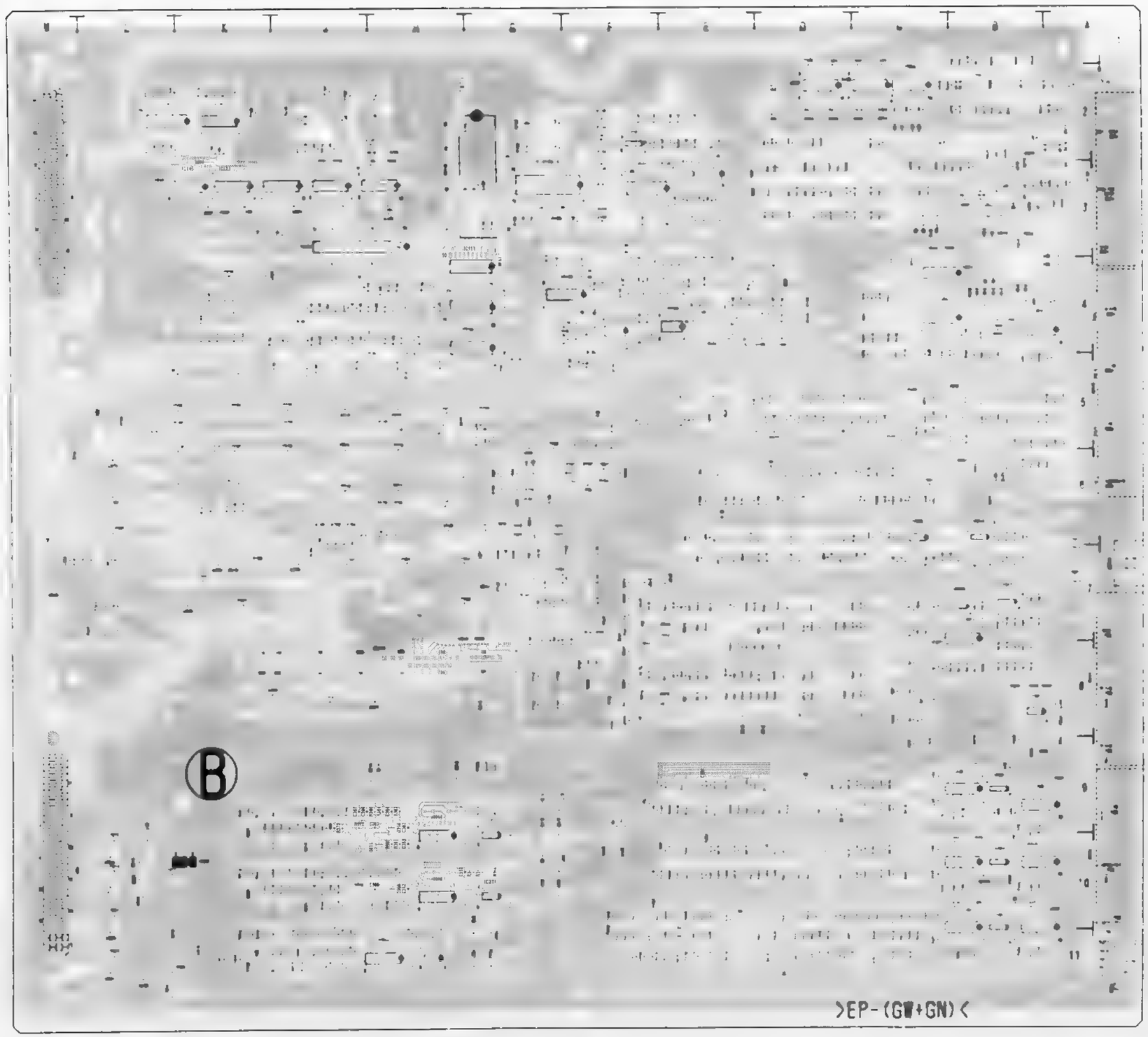

L901	K10	* Q608	F7	RV612	L6				
L902	K10	* Q609	D7	RV613	D6				
L903	K11	* Q610	E7	RV800	C3				
L904		* Q611	D7	RV801	D2				
		* Q612	D7	(DA-95A ONLY)					
PS900	K10	* Q613	D7	RV804	L7				
PS901	K10	* Q614	F8	RV805	C4				
PS902	K11	* Q615	F8	RV807	B2				
PS903	K10	* Q616	D8						
		(DA-95A ONLY)		S100	A2				
* Q100	D4	* Q617	E8	S101	L5				
* Q101		* Q618	D8	S102	L5				
* Q102	E4	* Q619	D8	S103	K5				
* Q103	E4	* Q620	D8	S600	K7				
* Q104	E4	* Q621	B6	S601	H6				
* Q105		* Q622	B7	S801	L7				
* Q106	F4	* Q623	E6						
* Q107	F4	* Q624	E7	TP100	H4				
* Q108		* Q625	D7	TP101	H3				
* Q109	G2	(DA-95A ONLY)		TP102	J3				
* Q110	H4	* Q626	C6	TP103	K3				
* Q300	J11	* Q627	F5	TP104	K5				
* Q301	I11	* Q628	H5	TP105	H2				
* Q302	I11	* Q629	E6	TP106	H2				
* Q303	I11	* Q630	D6	TP107					
* Q304	J10	* Q631	D6	TP300	H11				
* Q305	I10	* Q632	D6	TP301	G10				
* Q306	I10	* Q633	C6	TP302	G10				
* Q307	H10	* Q634	F8	TP400	B10				
* Q308	H10	* Q635	G7	TP401	F10				
* Q309	I10	* Q636	G6	TP402	I1				
* Q310	I10	* Q637	G6	TP403	B11				
* Q311		* Q638	G7	TP404	B10				
* Q312	I8	* Q639	F7	TP405	E10				
* Q313	I9	* Q640	F8	TP406	A10				
* Q314	H10	* Q800	D3	TP407	B10				
* Q315		* Q801	D3	TP408	B9				
* Q316	I10	* Q802	D3	TP409	E9				
* Q317	I9	* Q803	C3	TP410	A10				
* Q400	F10	* Q804	D3	TP411	B9				
* Q401	F11	* Q805	C3	TP412	A8				
* Q402	F11	(DA-95A ONLY)		TP413	A5				
* Q403	E11	* Q806	D3	TP600	A10				
* Q404	E10	(DA-95A ONLY)		TP601	A9				
* Q405	E10	* Q807	B3	TP602	B8				
* Q406	D11	* Q808	C4	TP603	A7				
* Q407	C11	* Q809	C5	TP604	A7				
* Q408	C11	* Q810	B3	TP606	A11				
* Q409	C11	* Q811	A3	TP607	C7				
* Q410	C11	* Q812	B3	TP608	B6				
* Q411	C10	* Q813	A3	TP609	D8				
* Q412	D11	* Q814	A3	TP610	F7				
* Q413		* Q815	A2	TP611	F6				
* Q414		* Q816	B2	TP800	C3				
* Q415		* Q817	B1	TP801	B2				
* Q416		* Q818	B2	TP802	B2				
* Q417		* Q819	C2	TP803	B1				
* Q418		(DA-95A ONLY)		TP804	C1				
* Q419				TP805	C1				
* Q420		RB102	J6	TP806	D1				
* Q421		RB300	I7	TP807	D1				
* Q422		RB301	I7	TP900	J11				
* Q423		RB302	K6	TP901	J10				
* Q424		RB303	J6	TP902	J11				
* Q425		RB902	I7	TP903	K9				
* Q426		RB903	I7						
* Q427		RB906	I7	X100	F3				
* Q428		RB907	I7	X101	F2				
* Q429				X102	I2				
* Q430		RV100	L5	X600	G8				
* Q431		RV101	F4	(DA-95 ONLY)					
* Q432		RV300	I10	X601	G8				
* Q433		RV301	G10	(DA-95A ONLY)					
* Q434		RV302	I10						
* Q435		RV303	G9						
* Q436		RV401	E11						
* Q437		RV402	D10						
* Q438		RV403	D10						
* Q439		RV404	C10						
* Q440		RV405	D9						
* Q441		RV406	C9						
* Q442		RV409	C5						
* Q443		RV410	E5						
* Q444		RV604	E7						
* Q445		RV605	D7						
* Q446		RV606	D8						
* Q600		RV608	B6						
* Q604		RV609	D6						
* Q605		RV610	D6						
* Q606		(DA-95A ONLY)							
* Q607		RV611	L6						

DA-95/95A
PART NO. 1-661-118-12
MODEL ES-7
-B SIDE-

FM-43/43A : SWITCHER CONTROL & FRAME SYNCHRONIZER BOARD

FM-43/43A (1-661-350-12)

* : B SIDE

CN1	B2	IC130	E10
CN701	L9	IC131	K5
CN702	L5	IC132	K2
CN703	L2	IC133	I6
		IC201	I6
E1	J2	IC202	I6
E2	K4	IC203	I7
E3	K10	IC204	J6
E4	I6	IC205	.
E5	H8	IC206	J6
E6	I11	IC207	J7
E7	G2	IC208	.
E8	E2	IC209	J8
E9	F6	IC210	J7
E10	F8	IC211	K6
E11	F10	IC212	K7
E12	C2	IC213	K7
E13	C5	IC214	K8
E14	B6	IC215	K7
E15	C10	IC216	J8
		IC217	I7
FL500	J5	IC219	H8
FL501	K5	IC220	I8
FL502	K5	IC221	H7
FL503	J5	IC222	I7
FL504	K5	IC223	I8
FL505	K5	IC224	I8
FL506	K3	IC225	I9
FL507	K4	IC226	J8
		IC227	J9
IC1	A6	IC228	J8
IC2	A7	IC229	J9
IC3	A8	IC230	J10
IC4	A9	IC231	J10
IC101	.	IC232	.
IC102	A5	IC233	K8
IC103	B5	IC234	K9
IC104	C4	IC235	K10
IC105	C5	IC236	K10
IC106	B5	IC237	K9
IC107	D4	IC238	J10
IC108	C4	IC239	I9
IC109	D4	IC240	H10
IC112	B3	IC241	I10
IC113	B4	IC242	H10
IC114	D6	IC243	I10
IC115	A3	IC244	H7
IC116	A4	IC245	I7
IC117	A5	IC246	H9
IC119	A.	IC247	I9
IC120	B2	IC248	J7
IC121	C3	IC249	J7
IC122	D3	IC250	I7
IC123	C3	IC251	I8
IC124	D3	IC252	J10
IC125	D4	IC253	J9
IC127	D3	IC254	I10
IC128	C4	IC255	I10
IC129	D2	IC256	G6
IC130	D2	IC257	G7
IC131	C2	IC258	F6
IC132	D4	IC259	G5
IC133	D3	IC260	G2
IC201	C7	IC261	G3
IC202	C7	IC262	G4
IC203	D7	IC263	G2
IC204	C8	IC264	G3
IC205	E7	IC265	G4
IC206	D7	IC266	F5
IC207	D8	IC267	F2
IC208	D8	IC268	F3
IC209	D8	IC269	F4
IC210	E8	IC270	E2
IC211	E8	IC271	E3
IC212	C8	IC272	E4
IC213	D8	IC273	F10
IC214	B8	IC274	F10
IC215	B9	IC275	F9
IC216	D9	IC276	F9
IC217	D9	IC277	F9
IC219	D9	IC278	F10
IC220	D9	IC279	F10
IC221	E9	IC280	G9
IC222	E9	IC281	G9
IC223	C10	IC282	G10
IC224	D10	IC283	G10
IC225	D10	IC284	F7
IC226	E11	IC285	F8
IC227	D11	IC286	G7
IC228	C11	IC287	G8
IC229	D11	IC288	F7

FM-43/43A
PART NO. 1-661-350-12
MODEL ESBK-7021
-A SIDE-

IC434	F7
IC435	F8
IC436	F7
IC500	K2
IC501	K3
IC503	I3
IC504	I5
IC505	I2
IC507	J3
IC508	I4
IC509	K3
IC511	J2
IC512	J2
L1	K11
L2	K11
L301	J5
L302	K2
L501	J5
L502	J4
L503	K2
L504	K3
PS1	K11
RB103	G3
RB104	D5
RB105	D5
RB300	K5
RB301	K5
RB302	J5
RB303	K6
RB304	K6
RB305	J6
RB306	J6
RB307	J6
RB308	I5
RB309	I8
RB310	K5
RB311	K5
RB312	J5
RB313	J5
RB314	I5
RB500	J5
RB501	J5
RB502	K5
RB503	J5
RB504	K5
RB505	K5
RB506	J4
RB507	J4
RB508	K4
RB509	J4
RB510	K4
RB511	K4
RB512	K3
RB513	K3
RB514	K4
RB515	K4
TP101	D5
TP201	E6
TP202	D9
TP203	C9
TP401	G5
TP402	G5
TP403	F5
TP404	F5
TP501	G2
TP502	F2
TP503	G2
TP504	H2
TP505	J2
TP506	J2
X101	E6

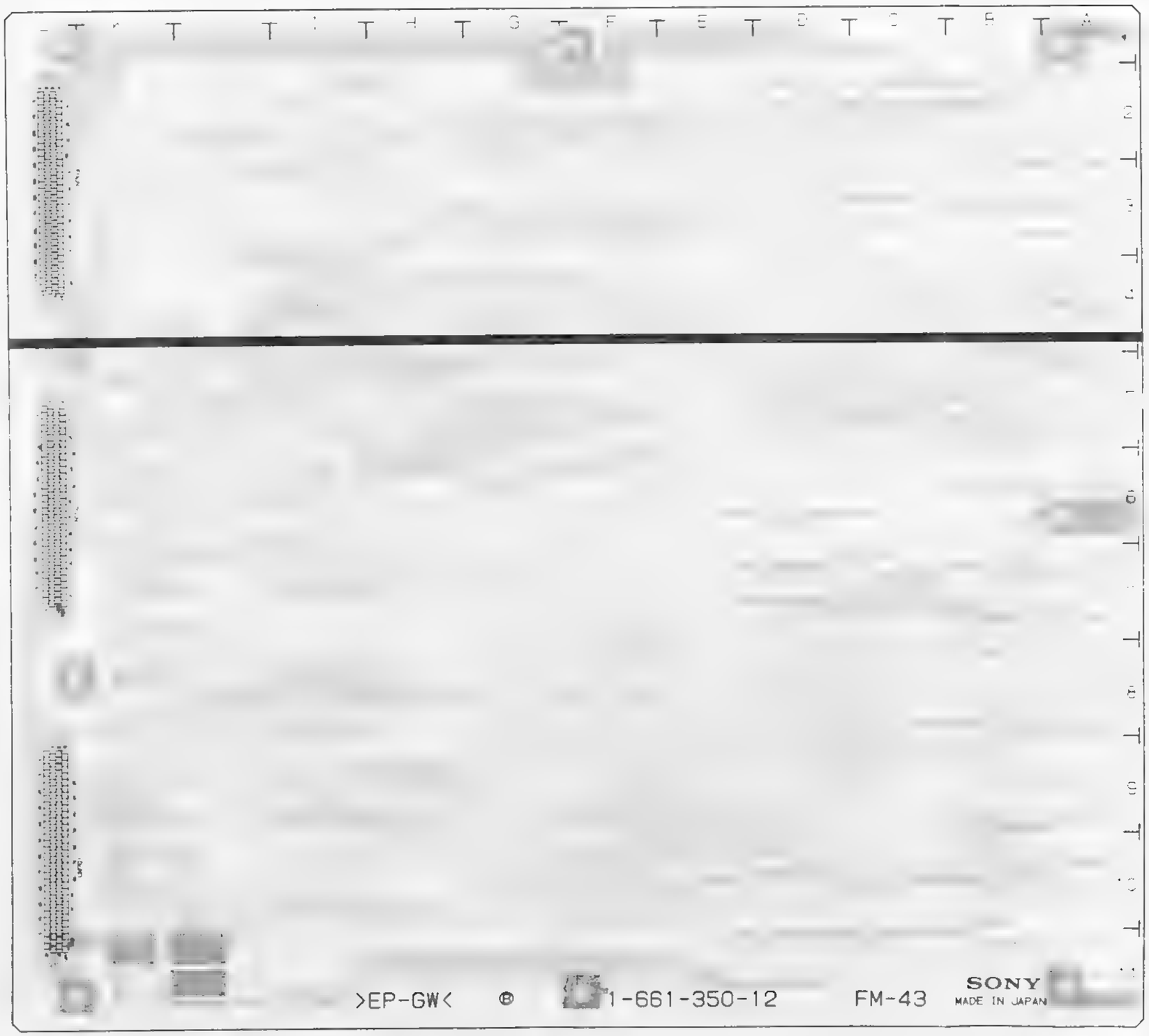

FM-43/43A
PART NO 1-661-350-12
MODEL ESBK-7021
-B SIDE-

MY-74 : MEMORY BOARD

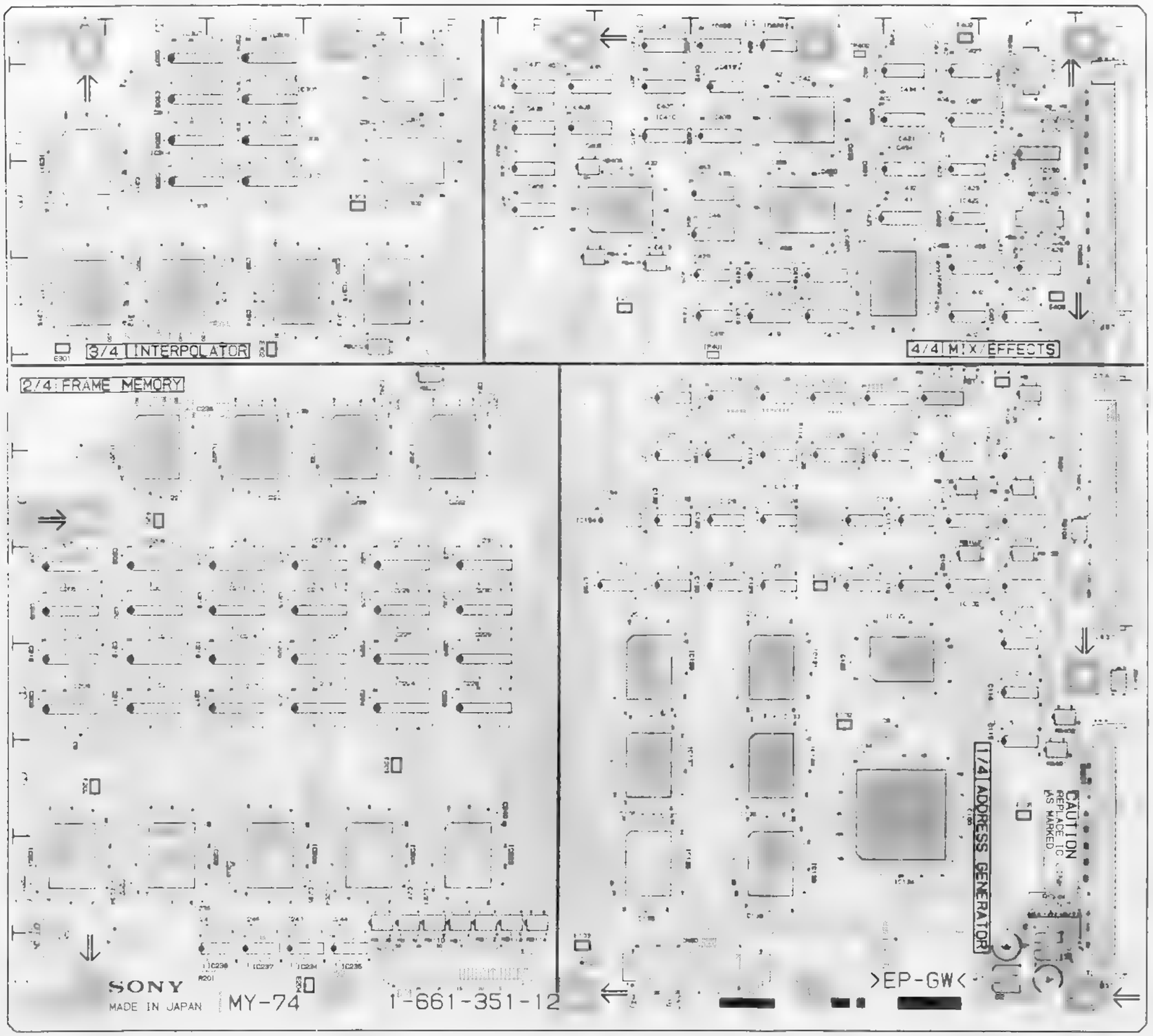

MY-74 (1-661-351-12)

* : B SIDE

CN60	H11	IC226	E7
CN70	E11	IC227	E7
CN801	L9	IC228	E8
CN802	L5	IC229	E8
CN803	L2	IC230	E7
		IC231	E7
E101	I7	IC232	E5
E102	I8	IC233	D5
E103	F11	IC234	D11
E104	K5	IC235	D11
E105	K9	IC237	C11
E201	B6	IC238	C11
E202	A9	IC301	E2
E203	D9	IC302	E3
E204	D11	IC303	B2
E301	A4	IC304	B2
E302	C4	IC305	C2
E303	D3	IC306	C2
E401	G4	IC307	B1
E402	J1	IC308	B3
E403	K4	IC309	C1
		IC310	C3
FL401	K2	IC311	A3
FL402	K3	IC312	B4
		IC313	D4
IC101	K7	IC314	C4
IC102	J7	IC315	A4
IC103	K6	IC401	K4
IC104	J6	IC402	J4
IC106	H5	IC403	J4
IC107	I5	IC405	F3
IC108	J5	IC406	F2
IC109	J6	IC407	G2
IC110	H6	IC408	F3
IC111	J6	IC409	H2
IC112	G5	IC410	G2
IC113	K8	IC411	G1
IC114	K8	IC412	H2
IC115	K9	IC413	G3
IC116	J7	IC416	I4
IC117	J6	IC417	I4
IC118	I6	IC418	H4
IC119	H5	IC419	H4
IC120	G8	IC420	I3
IC121	H8	IC421	I2
IC122	J8	IC422	J3
IC123	H7	IC423	J3
IC124	H6	IC424	H1
IC125	I7	IC425	J2
IC126	H6	IC426	J4
IC127	G6	IC427	..
IC128	I6	IC428	K4
IC129	H6	IC429	H4
IC130	H7	IC430	H4
IC131	G7	IC431	J3
IC132	G6	IC432	J3
IC133	H9	IC433	J2
IC134	J9	IC434	J2
IC135	G10	IC435	F2
IC136	H10	IC436	F2
IC137	G9	IC437	F2
IC139	K6	IC438	H1
IC150	K2	IC439	H3
IC151	J5	IC440	H3
IC153	G7		
IC154	G6	L1	K11
IC201	A10	L2	K11
IC202	B10	L100	K6
IC203	C10	L101	K3
IC204	D10	L201	E5
IC205	A7	L202	D5
IC206	A7	L401	J3
IC207	B7	L402	J2
IC208	B7	L403	F2
IC209	A8	L404	J2
IC210	A8	L405	K4
IC211	B8		
IC212	B8	PS1	L11
IC213	C7		
IC214	C7	RB101	K5
IC215	D7	RB102	K7
IC216	D7	RB103	J7
IC217	C8	RB104	L6
IC218	C8	RB105	K6
IC219	D8	RB106	J6
IC220	D8	RB107	K2
IC221	B5	RB108	D10
IC222	C5	RB109	E10
IC223	E10	RB110	E10
IC224	E8	RB111	E10
IC225	E8	RB112	E10

MY-74
PART NO. 1-661-351-12
MODEL ESBK-7021
-A SIDE-

RB113 F10
RB114 F10
RB115 K3
RB116 K2
RB117 K3
RB118 J5
RB119 J5
RB201 E5
RB202 D4
RB400 K1
RB401 K9
RB402 K8
RB403 J8
RB404 F4
RB405 G4
RB406 F3
RB407 K2
RB408 K3
RB409 K3

S201 A1

TP400 K2
TP401 H5
TP402

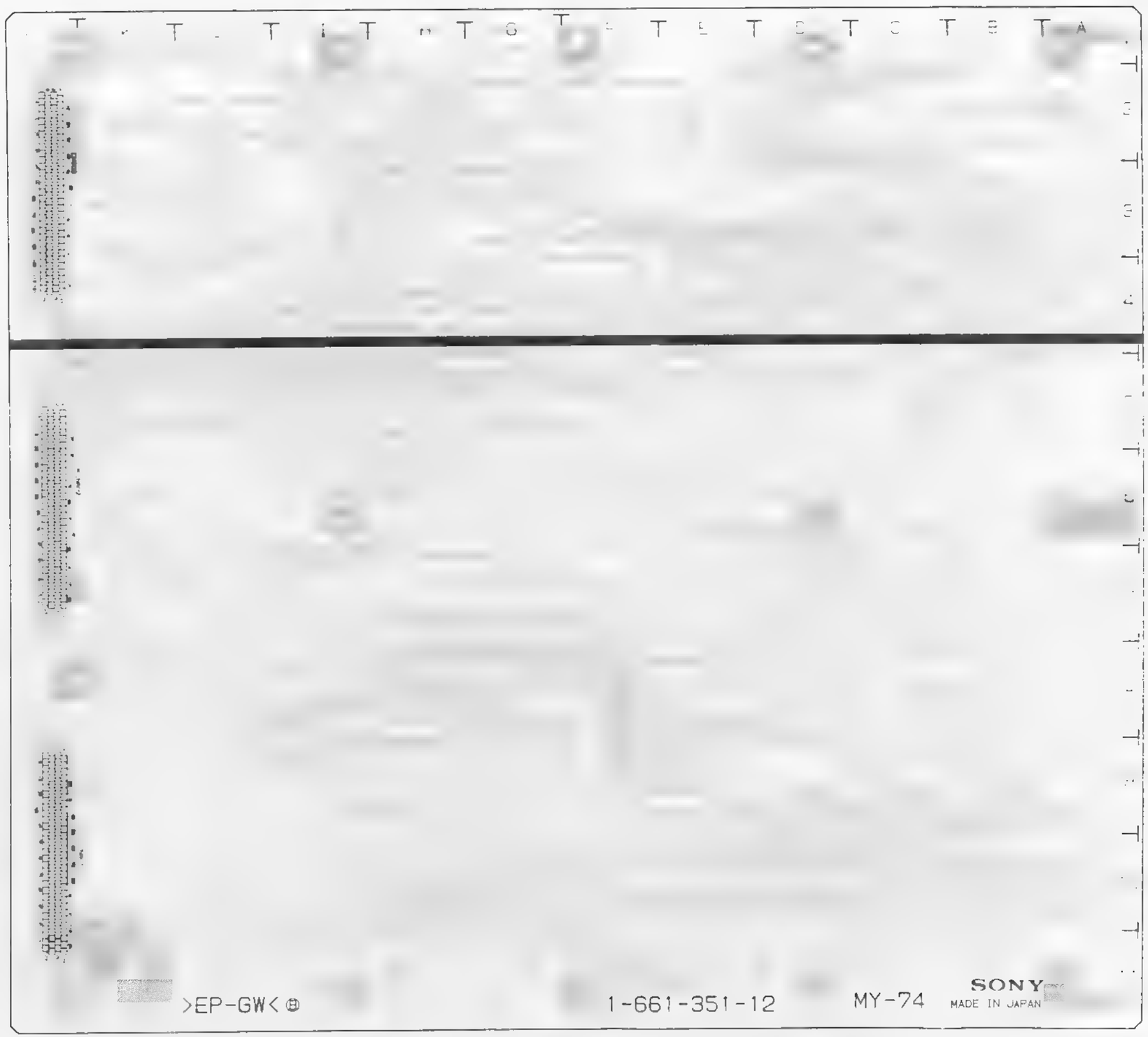

MY-74
PART NO 1-661-351-12
MODEL ESBK-7021
-B SIDE-

PU-84A : 3D EFFECT BOARD

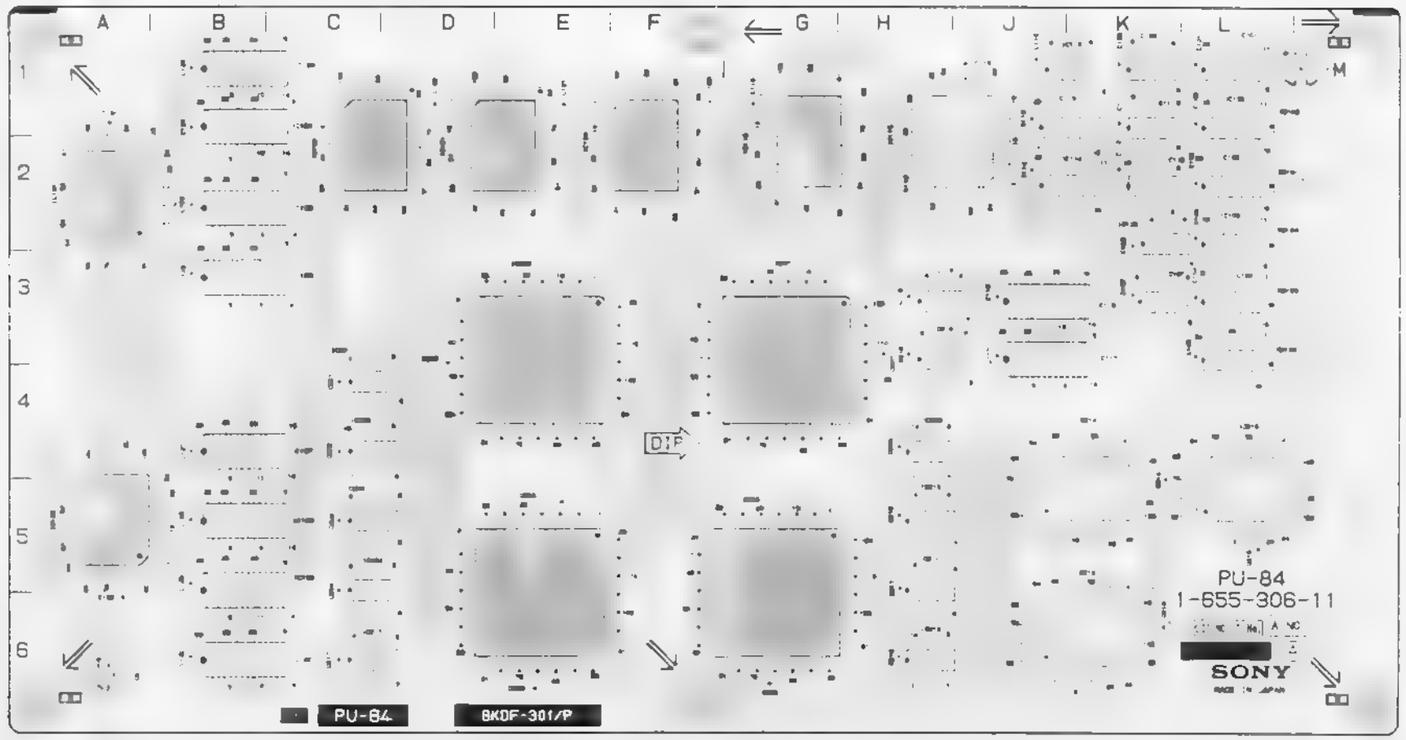

PU-84A
PART NO 1-655-306-11
MODEL ESBK-7022
-A SIDE-

PU-84A (1-655-306-11)

* : B SIDE

* CN60	M-2
* CN70	M-5
C1	M-1
IC101	L 1
IC102	L 2
IC103	L 1
IC104	L 3
IC105	L 2
IC106	L 3
IC107	K 3
IC108	K 1
IC109	K 2
IC110	K 1
IC111	K 1
IC112	K 2
IC113	K 1
IC114	K 2
IC115	J 2
IC116	J 3
IC117	J 3
IC118	H 3
IC119	G 2
IC120	F 2
IC121	E 2
IC122	C 2
IC123	B 1
IC124	B 1
IC125	B 2
IC126	B 3
IC127	B 4
IC128	B 5
IC129	B 6
IC130	B 7
IC131	A 1
IC132	A 5
IC201	C 4
IC202	C 4
IC203	C 5
IC204	C 5
IC205	E 2
IC206	E 5
IC207	G 1
IC208	G 5
IC209	H 4
IC210	H 1
IC211	H 5
IC212	H 6
IC213	K 6
IC214	K 5
IC215	L 5
IC216	H 3
IC217	[illegible]
RB101	[illegible]
RB102	[illegible]
RB103	[illegible]
RB104	[illegible]
RB105	[illegible]

PU-84A PU-84A

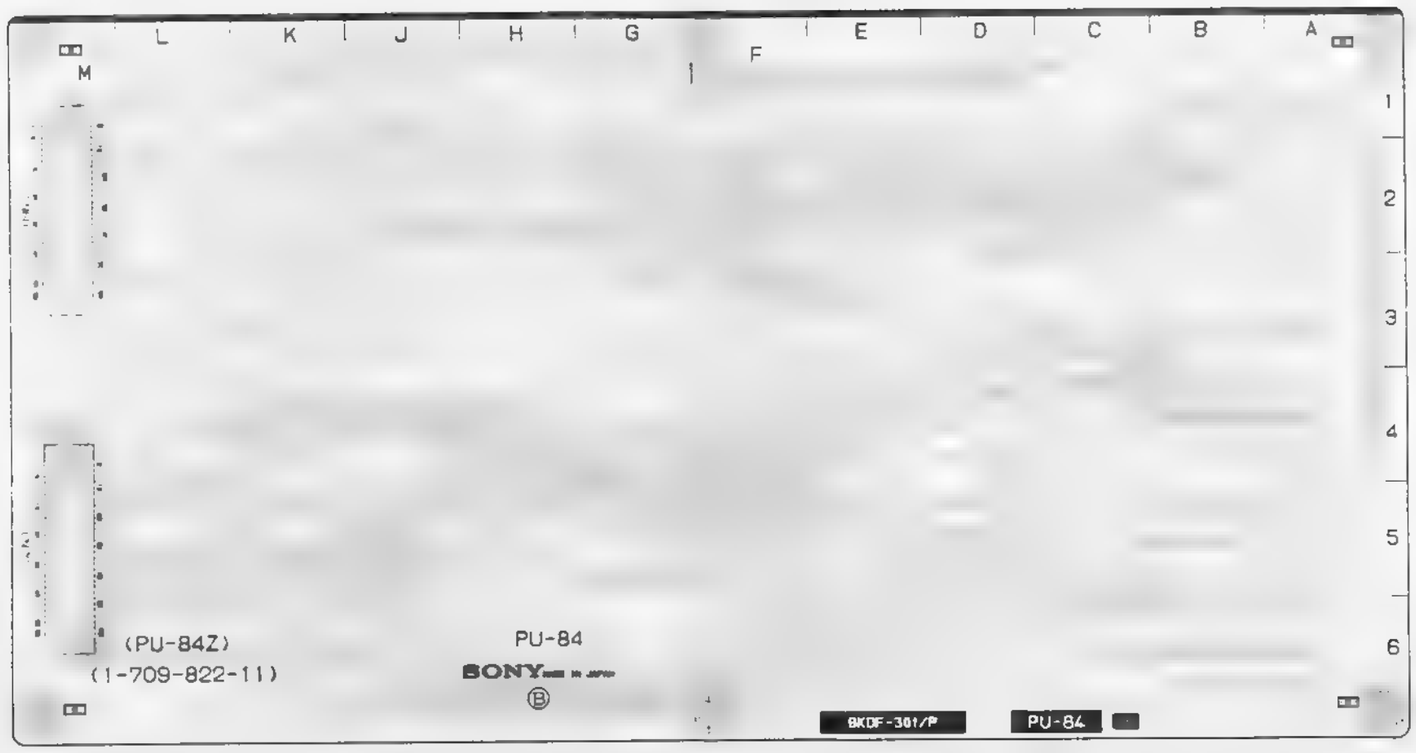

PU-84A
PART NO 1-655-306-11
MODEL ESBK-7022
-B SIDE-

FM-44/44A : SWITCHER CONTROL & FRAME SYNCHRONIZER BOARD

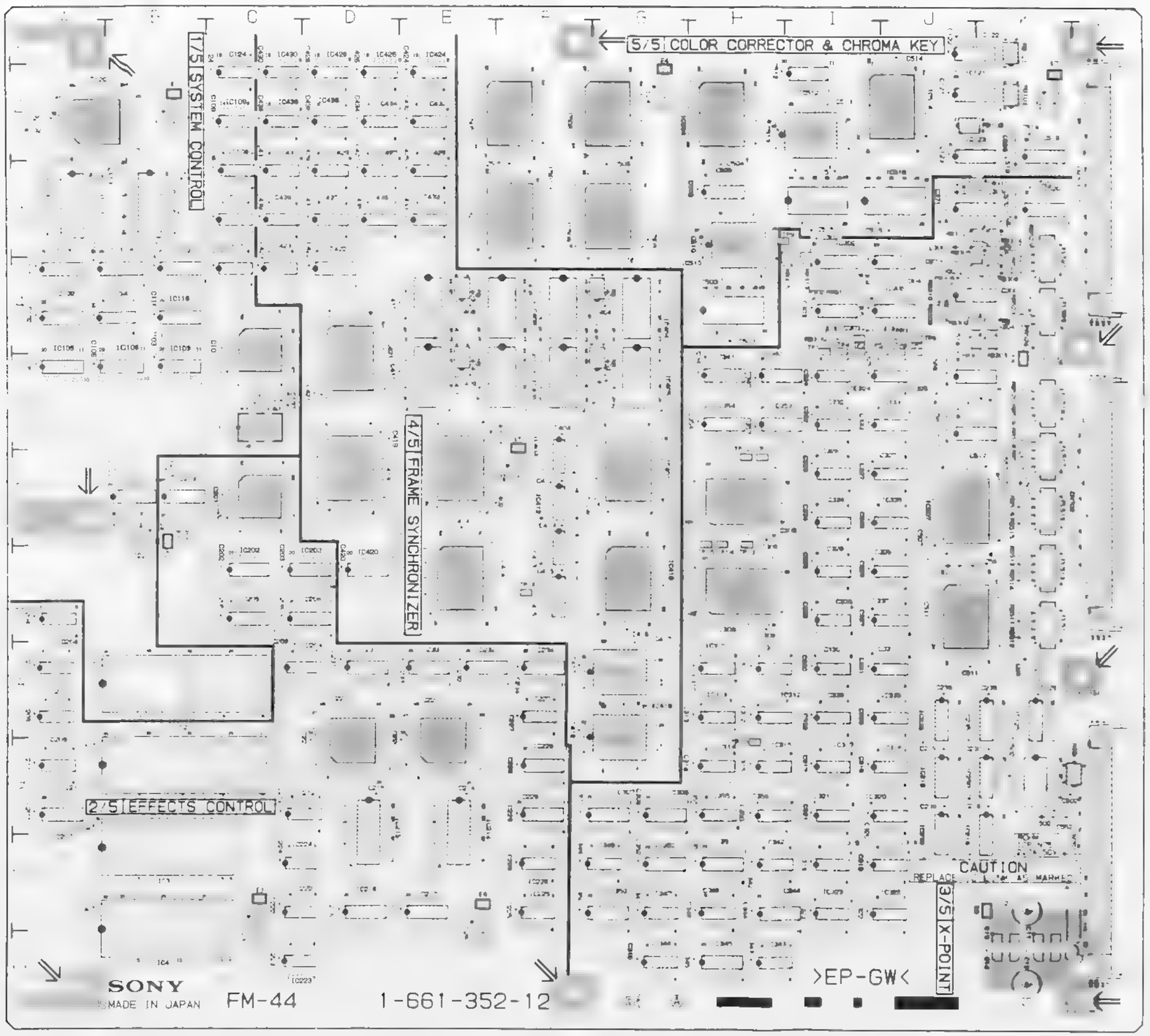

FM-44/44A (1-661-352-12)

* : B SIDE

CNI1	L11	IC300	J4
CNI2	L11	IC301	J3
CNI3	L11	IC302	I4
CNI4	L11	IC303	I4
		IC304	J4
CN701	L9	IC305	J4
CN702	L5	IC306	G9
CN703	L2	IC307	G9
		IC308	H7
E1	B2	IC309	H6
E2	B6	IC310	H8
E3	C10	IC311	H8
E4	G2	IC312	H6
E5	F5	IC313	H8
E6	E10	IC314	H9
E7	K2	IC315	H9
E8	K5	IC316	J9
E9	K10	IC317	I9
		IC318	J10
FL511	K7	IC319	I10
FL513	K7	IC320	J9
FL515	K6	IC321	I9
FL517	K6	IC322	J10
FL519	K5	IC323	I10
FL521	K3	IC324	I5
FL523	K4	IC325	J5
		IC326	I6
IC1	A8	IC327	J6
IC2	A9	IC328	I7
IC3	A10	IC329	J7
IC4	A11	IC330	I8
IC101	C4	IC331	J8
IC102	A4	IC332	I5
IC103	B5	IC333	J5
IC104	B4	IC334	I6
IC105	A5	IC335	J6
IC106	B5	IC336	I7
IC108	C3	IC337	J7
IC109	C2	IC338	I8
IC110	C4	IC339	J8
IC111	B6	IC340	H5
IC112	B3	IC341	H5
IC113	A3	IC342	H10
IC115	A4	IC343	H11
IC116	B4	IC344	H10
IC117	C3	IC345	H11
IC118	B4	IC346	H10
IC119	B4	IC347	G10
IC120	A2	IC348	G11
IC121	J2	IC349	G10
IC122	J1	IC350	G10
IC123	J2	IC351	H10
IC124	C2	IC352	G10
IC125	K8	IC353	H5
IC201	C6	IC354	H5
IC202	C7	IC355	H9
IC203	D7	IC356	H9
IC204	A7	IC401	G6
IC205	C7	IC402	E6
IC206	D7	IC403	F6
IC207	A9	IC404	G4
IC208	D8	IC405	G5
IC209	A8	IC406	F4
IC210	A8	IC407	F5
IC211	A9	IC408	F4
IC212	D9	IC409	F5
IC213	B6	IC410	E4
IC214	E9	IC411	E5
IC215	D9	IC412	F6
IC216	D10	IC413	F7
IC217	E10	IC414	E7
IC218	K9	IC415	F7
IC219	J9	IC416	G7
IC220	E9	IC417	G8
IC221	D9	IC418	G8
IC222	D10	IC419	D6
IC223	D11	IC420	D7
IC224	D10	IC421	D5
IC225	F10	IC422	D4
IC226	F10	IC423	C4
IC227	F8	IC424	E2
IC228	F9	IC425	E3
IC229	F9	IC426	D2
IC230	K9	IC427	D3
IC231	D8	IC428	D2
IC232	E8	IC429	D3
IC233	E8	IC430	C2
IC234	F8	IC431	C3
IC235	K8	IC432	E2
IC236	J8	IC433	E3
IC239	J9	IC434	D2

FM-44/44A
PART NO 1-661-352-12
MODEL ESBK-7023
-A SIDE-

IC435	D3
IC436	D2
IC437	D3
IC438	C2
IC439	C3
IC501	F3
IC502	K9
IC503	H4
IC504	H2
IC505	F2
IC506	G2
IC507	J6
IC508	I3
IC509	H3
IC510	H3
IC511	J7
IC512	J2
IC513	I2
IC514	J2
IC515	I3
IC516	J3
IC517	J5
IC518	J5
IC519	K2
IC520	K3
L?	K11
L?	K10
L300	J3
L301	J3
L502	J?
L507	K6
L511	J7
L517	J5
L518	J5
L519	K3
L520	K3
PS1	K11
RB101	K1
RB102	J2
RB103	K2
RB301	J4
RB302	J4
RB303	K4
RB304	K4
RB305	K3
RB306	K4
RB307	K3
RB308	K4
RB309	J4
RB310	J4
RB311	K3
RB312	K3
RB313	I3
RB314	K3
RB315	I3
RB316	I4
RB317	J4
RB401	G4
RB402	G5
RB403	E4
RB404	E5
RB501	L9
RB511	K7
RB512	K7
RB513	K7
RB514	K7
RB515	K6
RB516	K6
RB517	K6
RB518	K5
RB519	K5
RB520	K5
RB521	K3
RB522	K4
RB523	K4
RB524	K4
TP1	I4
TP2	I4
TP3	I4
TP4	I4
TP5	J4
TP6	J4
TP7	J4
TP8	J4
TP9	H3
TP10	H9
TP11	H6
TP12	H6
TP13	H6
TP14	H6
TP15	H6
TP16	F7
X101	C5

ESBK-7023

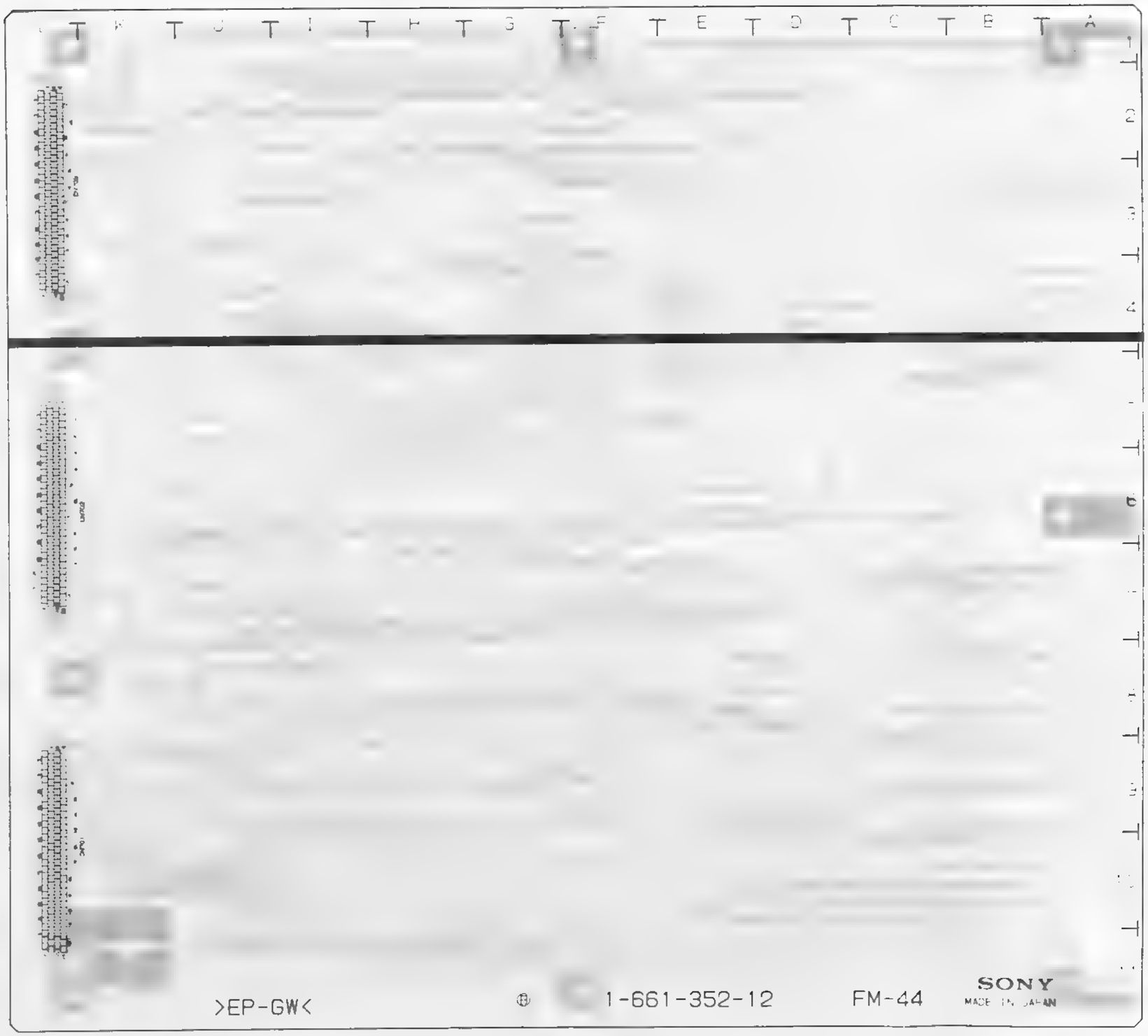

FM-44/44A
PART NO 1-661-352-12
MODEL ESBK-7023
-B SIDE-

MY-75 : MEMORY BOARD

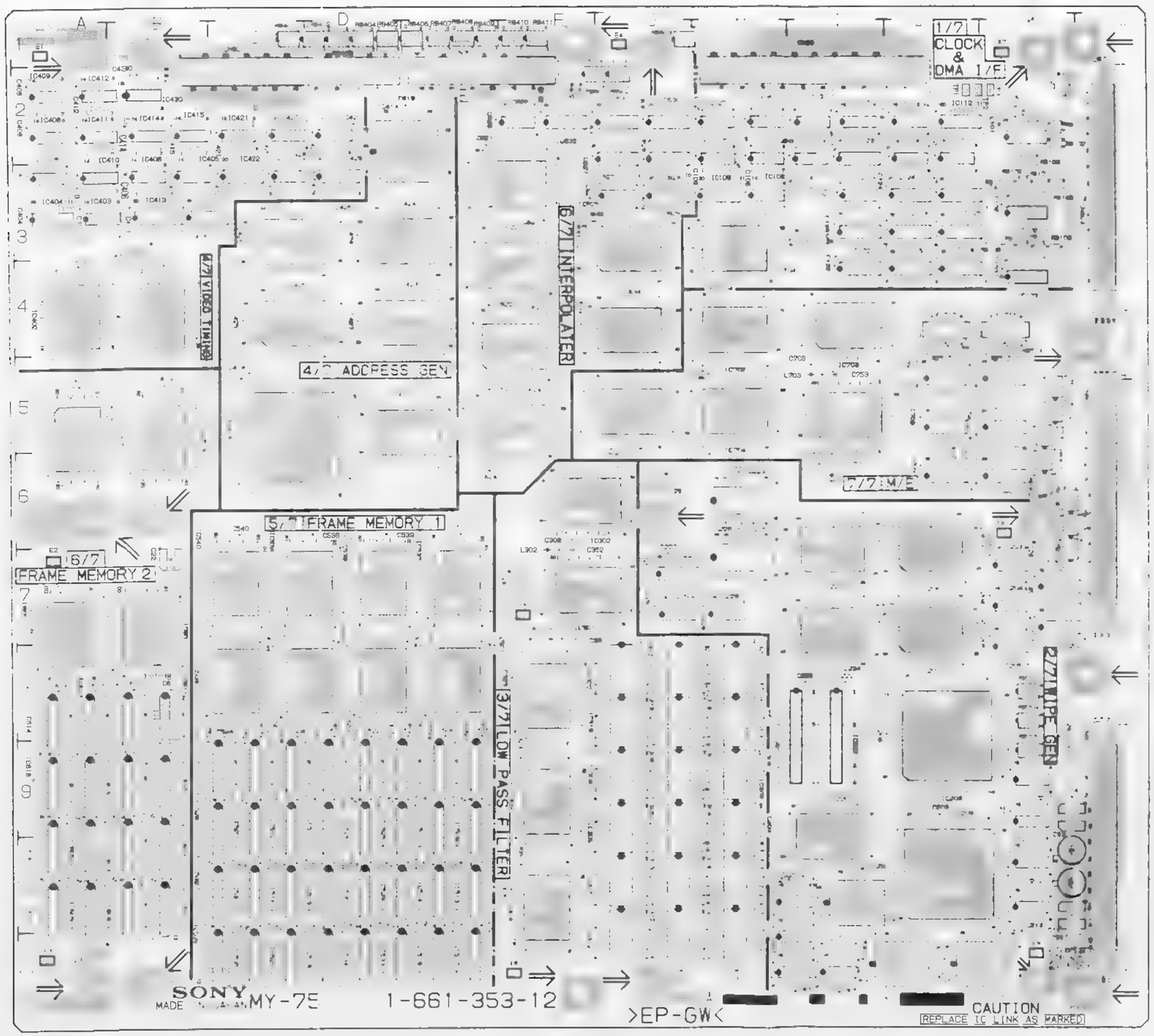

MY-75 (1-661-353-12)

• : B SIDE

CN60	D2	IC316	F10
CN70	F2	IC317	H8
CN80	J2	IC318	G9
CN801	L9	IC319	G8
CN802	L5	IC320	H4
CN803	L2	IC321	G5
		IC322	G8
E1	A1	IC323	H9
E2	A1	IC401	B4
E3	A1	IC402	A4
E4	A1	IC403	A3
E5	A1	IC404	A2
E6	A1	IC405	B2
E7	A1	IC406	B3
E8	A1	IC407	A3
E9	A1	IC408	A2
		IC409	A2
	J4	IC410	A2
	K4	IC411	A2
		IC412	A2
	K2	IC413	A1
	K3	IC414	B2
	K4	IC415	B2
	H3	IC416	B1
	H2	IC417	B1
	H3	IC418	B1
	H2	IC419	B1
	H2	IC420	B1
	H3	IC421	B1
	I2	IC422	B1
	I2	IC423	B1
	J2	IC424	B1
	J3		
	J3		
	J4		
	J4		
	I2	IC429	B1
	J2	IC430	B1
	J2	IC501	C1
	J2	IC502	C1
	I3	IC503	C1
	I4	IC504	C1
	I2	IC505	C1
	J3	IC506	C1
	J3	IC507	C1
	I3	IC508	C1
	H2	IC509	C1
	K7	IC510	C1
	K7	IC511	C1
	K7	IC512	C1
	K7	IC513	C1
	K8	IC514	C1
	J7	IC515	C1
	J7	IC516	C1
	J8	IC517	C1
	J10	IC518	C1
	K9	IC519	C1
	K9	IC520	C1
	K10	IC521	C1
	K10	IC522	C1
	J11	IC523	C1
	K11	IC524	C1
	I10	IC525	C1
	I11	IC526	C1
	I11	IC527	C1
	I11	IC528	C1
	I10	IC529	D10
	I7	IC530	D10
	I8	IC531	C10
	H6	IC532	C10
	I7	IC533	D11
	H8	IC534	D11
	H7	IC535	C11
	G7	IC536	C11
	H7	IC537	E7
	G7	IC538	D7
IC230	I10	IC539	D7
IC301	F7	IC540	G7
IC302	F6	IC601	B7
IC303	H9	IC602	A7
IC304	G9	IC603	B10
IC305	G9	IC604	B10
IC306	H9	IC605	A10
IC307	G9	IC606	A10
IC308	G9		H1
IC309	F9		H1
IC310	H11	IC609	A10
IC311	G11	IC610	A10
IC312	G11	IC611	B8
IC313	H10	IC612	B8
IC314	G10	IC613	A8
IC315	G10	IC614	A8

MY-75
PART NO. 1-661-353-12
MODEL ESBK 7023
-A SIDE-

IC615	B9
IC616	B9
IC617	A9
IC618	A9
IC619	B5
IC620	A5
IC621	F3
IC622	F4
IC623	F4
IC624	F5
IC625	G3
IC626	F2
IC627	G2
IC628	G2
IC629	G3
IC630	G2
IC631	G2
IC632	F2
IC633	G3
IC634	G4
IC701	I5
IC702	H4
IC703	I4
IC704	H5
IC705	G5
IC706	K5
IC707	K6
IC708	J5
IC709	J6
IC710	J5
IC711	K5

L1	K10
L2	K10
L101	K2
L301	F7
L302	F7
L701	I6
L703	I5
L706	J5
L707	J6
L710	J5
L711	J5

PS1	L11

RB101	K2
RB102	K2
RB103	K3
RB104	K3
RB105	K3
RB106	K3
RB107	K3
RB108	K3
RB109	K3
RB110	K3
RB111	K3
RB112	K7
RB113	K6
RB114	K6
RB301	K5
RB302	K6
RB303	K6
RB401	C1
RB402	D1
RB403	D1
RB404	D1
RB405	D1
RB406	E1
RB407	E1
RB408	E1
RB409	E1
RB410	F1
RB411	F1
RB601	F2
RB602	G2
RB603	G1
RB701	K5
RB702	K5
RB703	K8
RB704	K8
RB705	K9
RB710	J4
RB711	J4
RB712	K4
RB713	K4

TP1	J2
TP2	J2
TP3	K2

MY-75
PART NO 1-661-353-12
MODEL ESBK-7023
-B SIDE-

VE-33/33A : 3D EFFECT BOARD

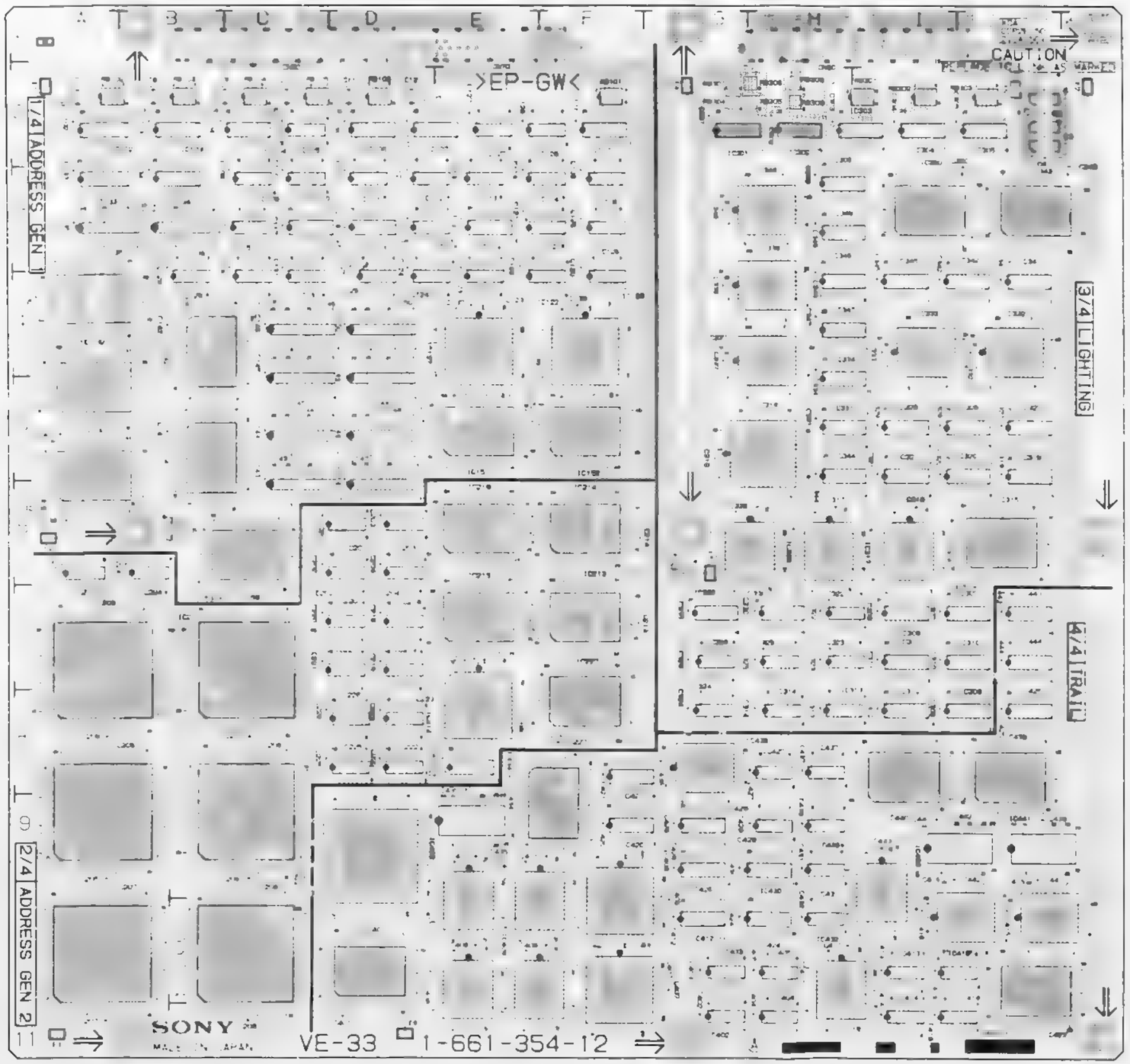

VE-33/33A
PART NO 1-661-354-12
MODEL ESBK-7024
-A SIDE-

VE-33/33A (1-661-354-12)

• : B SIDE

• CN60	D1	IC227	F8
• CN70	F1	IC301	G2
• CN80	J1	IC302	H2
		IC303	I2
E1	A2	IC304	I2
E2	A6	IC305	J2
E3	A11	IC306	H3
E4	G2	IC307	J7
E5	G6	IC308	J8
E6	D11	IC309	I7
E7	K2	IC310	J7
		IC311	I7
IC101	F2	IC312	I8
IC102	A2	IC313	H8
IC103	B2	IC314	H8
IC104	C2	IC315	J6
IC105	C2	IC316	I6
IC106	D2	IC317	H6
IC107	E2	IC318	H5
IC108	F3	IC319	J5
IC109	C3	IC320	J5
IC110	C3	IC321	I5
IC111	D3	IC322	H7
IC112	D3	IC323	H7
IC113	E3	IC324	G8
IC114	F3	IC325	H7
IC115	C3	IC326	G7
IC116	D3	IC327	J5
IC117	C3	IC328	J5
IC118	C3	IC329	I5
IC119	E3	IC330	H7
IC120	F4	IC331	H5
IC121	F3	IC332	J4
IC122	F4	IC333	I4
IC123	E4	IC334	H5
IC124	D4	IC335	G7
IC125	D4	IC336	G6
IC126	F3	IC337	H4
IC127	E2	IC338	H4
IC128	F2	IC341	J4
IC129	B4	IC342	J4
IC130	C4	IC343	J3
IC131	C4	IC344	H5
IC132	A4	IC345	I4
IC133	A3	IC346	H4
IC134	B3	IC347	H4
IC135	A3	IC348	H3
IC136	B3	IC349	H3
IC137	E4	IC350	I3
IC138	A5	IC401	D10
IC139	F4	IC402	G11
IC140	A5	IC403	G10
IC141	B5	IC404	H11
IC142	B4	IC405	H10
IC143	C6	IC406	F10
IC144	C5	IC407	F10
IC145	C5	IC408	E10
IC146	C4	IC409	F10
IC147	D6	IC410	E10
IC148	D5	IC411	F10
IC149	D5	IC412	G10
IC150	D4	IC413	I10
IC151	E5	IC414	I11
IC152	F5	IC415	J10
IC153	C6	IC416	J10
IC201	D6	IC417	H10
IC202	D6	IC418	J11
IC203	D6	IC419	J10
IC204	D6	IC420	F9
IC205	A9	IC421	F8
IC206	C9	IC422	D9
IC207	A10	IC423	J10
IC208	C10	IC424	H10
IC209	A7	IC425	J8
IC210	C7	IC426	G9
IC211	A6	IC427	H8
IC212	E8	IC428	H9
IC213	F7	IC429	G9
IC214	F6	IC430	H9
IC215	E7	IC431	H9
IC216	E6	IC432	H10
IC217	E8	IC433	I9
IC218	D7	IC434	F9
IC219	D7	IC435	E9
IC220	D7	IC436	G8
IC221	D7	IC437	H8
IC222	D8	IC438	H9
IC223	D8	IC439	J8
IC224	B6	IC440	I8
IC225	D8	IC441	J9
IC226	D8	IC442	J9

IC443	J7
IC444	J7
L1	J2
L102	A2
L103	B2
L104	C2
L105	C2
L106	D2
L107	D2
PS1	J2
RB101	F2
RB102	A2
RB103	B2
RB104	C2
RB105	D2
RB106	D2
RB301	J2
RB302	J2
RB303	J2
RB304	G2
RB305	H2
RB306	H2
RB307	G2
RB308	H2
RB309	H2

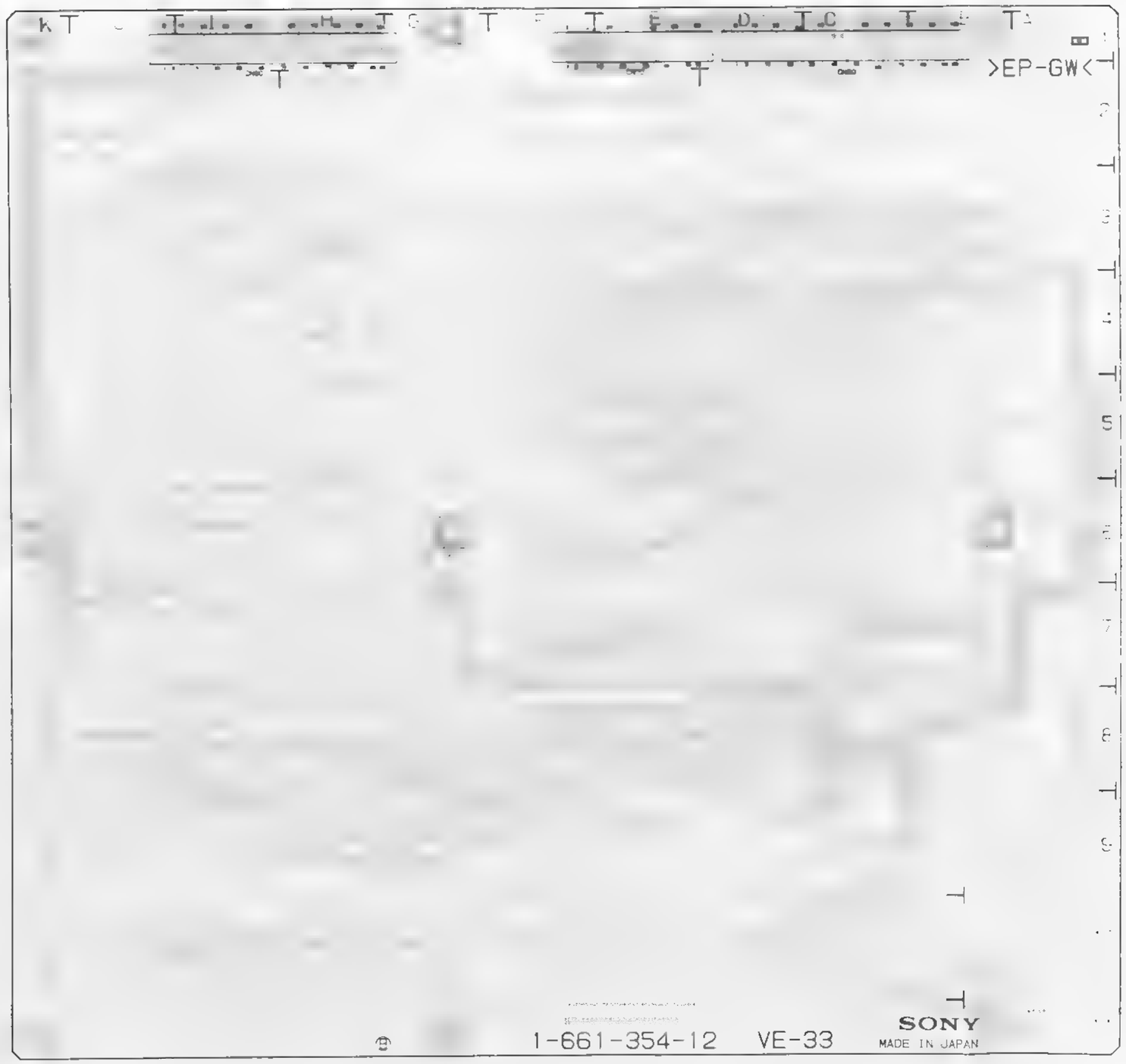

VE-33/33A
PART NO 1-661-354-12
MODEL ESBK-7024
-B SIDE-

DAC-20/20A : MONITOR BOARD

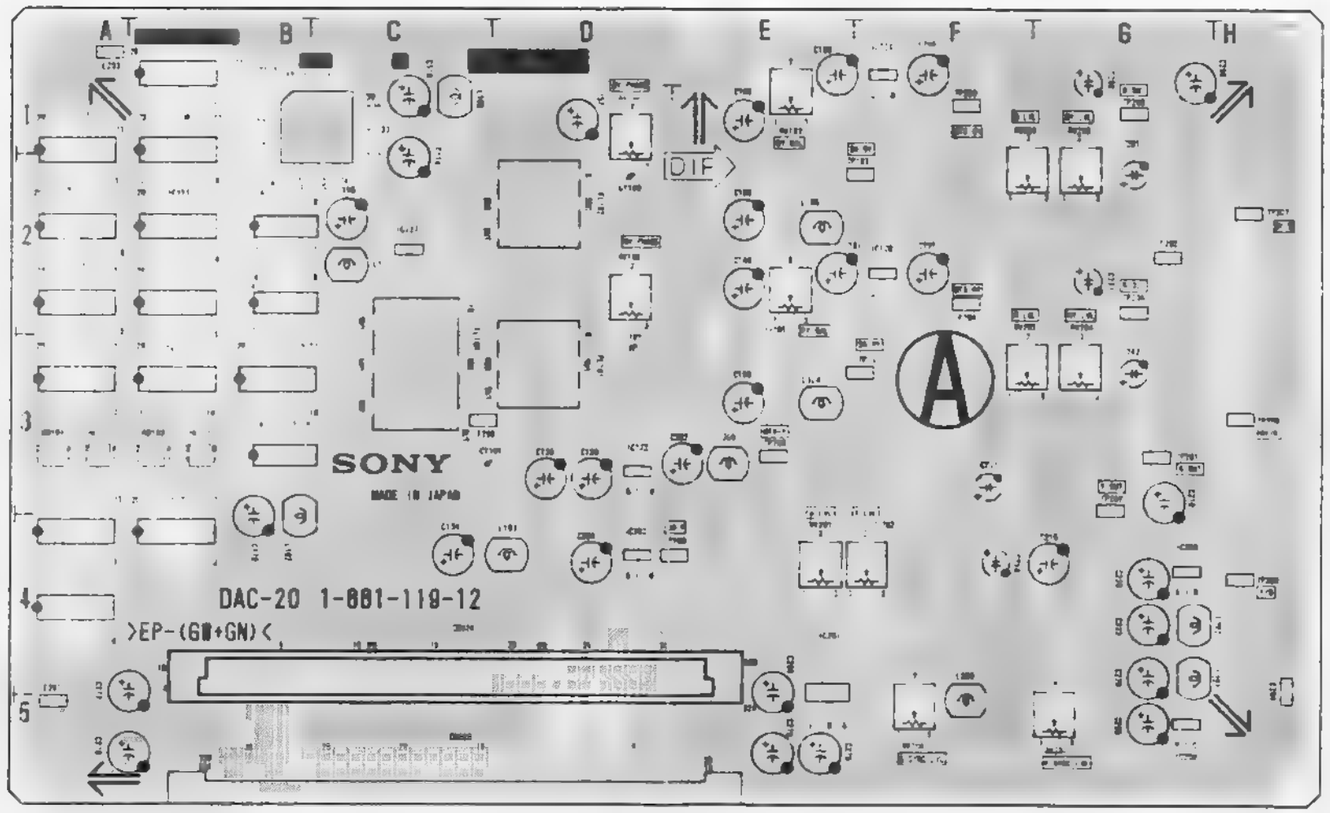

DAC-20/20A
PART NO 1-661-119-12
MODEL ESBK-7025/7071
-A SIDE-

DAC-20/20A (1-661-119-12)

* : B SIDE

CN524	B4	* Q208	F4
CN525	E5	* Q209	G4
		* Q210	G3
* D100	C2	* Q211	F4
* D101	D2	* Q212	F4
* D102	D2	* Q213	G4
* D200	F3	* Q214	F3
* D201	F2	* Q215	F2
* D202	F1	* Q216	F3
		* Q217	F2
E201	A5	* Q218	F3
E202	G2	* Q219	G2
E203	A1	* Q220	G2
E204	H5	* Q221	G3
E205	C3	* Q222	F2
		* Q223	F1
FL100	C3	* Q224	F1
FL101	D3	* Q225	F2
FL102	D2	* Q226	G1
		* Q227	G1
IC100	A3	* Q228	G1
IC101	A4	* Q229	F4
IC102	A4	* Q230	F5
IC103	B4	* Q231	G4
IC104	B2	* Q232	G4
IC105	A2	* Q233	G5
IC106	A2	* Q234	G4
IC107	A1		
IC108	B1	RB100	A3
IC109	B3	RB101	A3
IC110	B2	RB102	B3
IC111	B2	RB103	B3
IC112	C1		
* IC113	C2	RV100	D2
* IC114	D4	RV101	E2
* IC115	E4	RV102	D1
* IC116	E3	RV103	E1
* IC117	F2	RV201	E4
* IC118	E2	RV202	F4
* IC119	F1	RV203	F3
IC120	B3	RV204	G3
IC121	B1	RV205	F2
IC122	D3	RV206	G2
IC124	F1	RV208	F5
IC126	F2		
IC127	C2	TP100	D4
IC128	B3	TP101	E3
IC143	B2	TP102	
* IC200	H3	TP200	E3
IC201	E4	TP201	G3
IC202	D4	TP202	G3
* IC203	H3	TP203	H4
IC205	G4	TP204	F2
* IC206	H2	TP205	G2
IC208	G5	TP206	H3
		TP207	H2
L100	C1	TP208	F1
L101	C2	TP209	G1
L102	B3		
L103	D4		
L104	E3		
L105	E2		
L200	E3		
L201	G4		
L202	G4		
L206	F5		
* Q100	C2		
* Q101	C2		
* Q102	C3		
* Q103	C3		
* Q104	D2		
* Q105	D2		
* Q106	D3		
* Q107	D2		
* Q108	E2		
* Q109	D1		
* Q110	D1		
* Q111	D2		
* Q112	D2		
* Q113	E2		
* Q116	E3		
* Q117	E2		
* Q200	E4		
* Q201	E3		
* Q202	E4		
* Q203	E4		
* Q204	E4		
* Q205	F3		
* Q206	F4		
* Q207	F4		

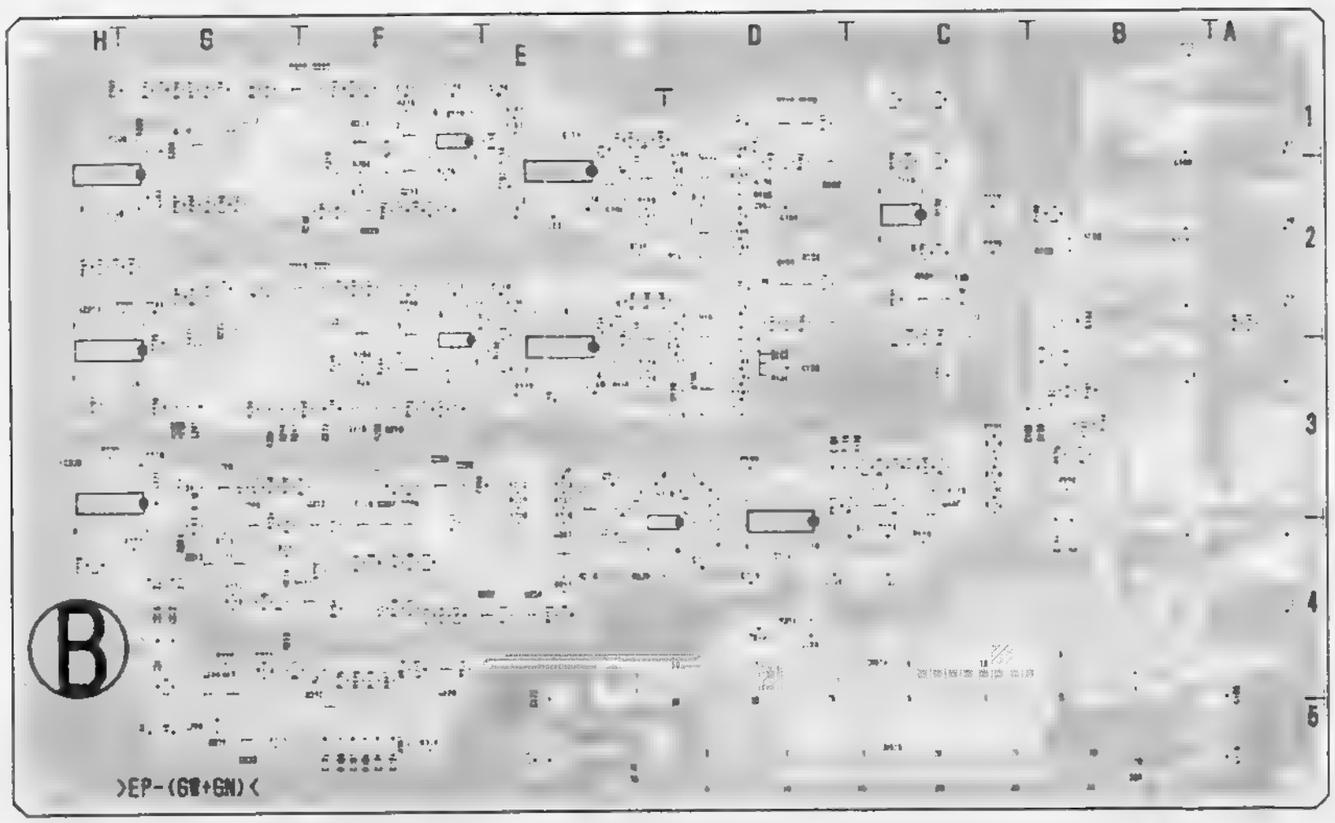

DAC-20/20A
PART NO 1-661-119-12
MODEL ESBK-7025/7071
-B SIDE-

IO-119 : QSDI I/F BOARD

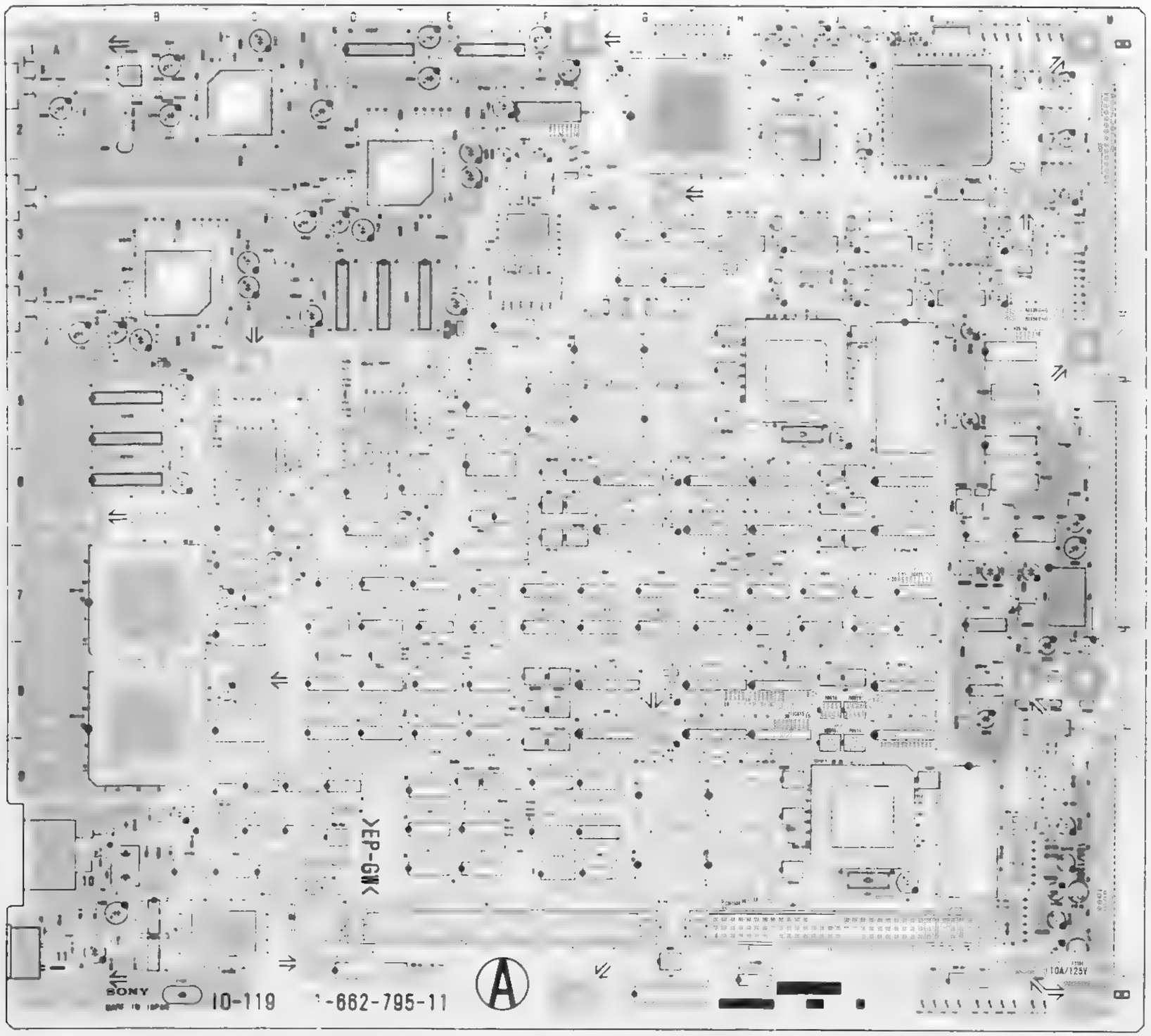

IO-119
PART NO 1-662-795-11
MODEL ESBK-7031
-A SIDE-

IO-119 (1-662-795-11)

* B SIDE

CNI119	B8		FL901	J1		IC427					
CNI120	B7		FL902	J1		IC428					
CNI304	G2		FL903	J1		IC429					
CNI501	G9		FL1001	B9		IC430					
CNI502	G10		FL1101	L8		IC431					
CNI503	H9		FL1102	L9		IC432					
CNI504	H10		FL1103	L2	*	IC433					
CNI522	K9		FL1104	L2	*	IC434					
CNI701	G4		FL1105	L3		IC501					
CNI702	G5		FL1106	L3		IC502					
CNI703	G4		FL1201	J3		IC503					
CNI704	G5		FL1202	H3		IC504					
CNI723	J4		FL1203	K3		IC505					
			FL1204	J3		IC506					
CN1	H11		FL1205	K4	*	IC507					
CN2	D11		FL1206	K4	*	IC508					
CN11	A11		FL1207	H3	*	IC509					
CN12	A10		FL1208	J4	*	IC510					
CN18	A4		FL1209	H4		IC511					
CN19	A3		FL1210	K4		IC512					
CN20	A2		FL1211	L4		IC513					
CN401	M9		F1101	M11		IC514					
CN402	M5		F1102	M10		IC515					
CN403	M2					IC516					
CN701	K1		IC101	C4		IC517					
			IC103	A5	*	IC518					
D102			IC104	A6	*	IC519					
D103			IC105	A6	*	IC520					
D202			IC107	C7	*	IC521					
D203			IC108	C8		IC522					
D302			IC109	C7		IC523					
D303			IC110	C6		IC524					
D501	*		IC111	C6		IC525					
D502	*	*	IC112	C5	*	IC601					
D503	*	*	IC113	C5		IC602					
D504	*		IC114	F9	*	IC603					
D505			IC115	C8		IC604					
D506			IC116	C7	*	IC605					
D507			IC119			IC606					
D508	*		IC120		*	IC607					
D701			IC201	E3		IC608					
D702			IC203	E4	*	IC609					
D703			IC204	D4		IC610					
D704			IC205	D4	*	IC611					
D705			IC207	D6	*	IC612					
D706			IC208	D5		IC613					
D707	*		IC209	E6	*	IC614					
D1001	A10		IC210	D6		IC615					
D1002	A10		IC211	E6	*	IC616					
D1003	B10	*	IC212	D5		IC617					
D1004	B10	*	IC213	E5		IC618					
D1101	L11		IC301	E5		IC619					
D1102	L11		IC302	E6		IC620					
			IC304			IC621					
E1	A5		IC308	F4		IC623					
E2	C4		IC309	F3		IC624					
E3	D2		IC310	F2		IC625					
E4	D10	*	IC311	G3		IC701					
E5	G4	*	IC312	G3		IC702					
E6	G8		IC313	B2		IC703					
			IC314	B2		IC704					
FB101	C4		IC316	F2		IC705					
FB102	B5		IC317	D2		IC706					
FB103	B6		IC318	E2	*	IC707					
FB201	E2		IC321	G9	*	IC708					
FB202	E4		IC401	E10	*	IC709					
FB203	D4		IC402	E9		IC710					
FB1101	L10		IC403	E10		IC711					
FB1102	L10		IC404	E7		IC712					
FB1103	L10		IC405	F6		IC713					
FB1104	L10		IC406	D7		IC714					
FB1105	L10		IC407	D7		IC715					
FB1106	L11	*	IC408	E7		IC716					
FB1107	L10		IC409	E7		IC717					
FB1108	L10		IC410	D7		IC718					
FB1109	L10		IC411	D8	*	IC719					
FB1110	L10		IC412	D8	*	IC720					
FB1111	L10		IC413	D8	*	IC721					
FB1112	L10		IC414	D8	*	IC722					
			IC415	F9		IC723					
FL401	J2	*	IC416	F9		IC724					
FL402	K5	*	IC417	E8		IC725					
FL403	K4	*	IC418	E8		IC726					
FL801	L6		IC419	K7		IC802					
FL802	L5	*	IC420	K7		IC803					
FL803	K7		IC421	K7	*	IC804					
FL804	L7	*	IC422	K7	*	IC805					
FL805	L6		IC423	K2		IC806					
FL806	L8		IC424	L5		IC807					
FL807	L8		IC425	L4		IC808					
FL808	K8		IC426	K1		IC901	H2				

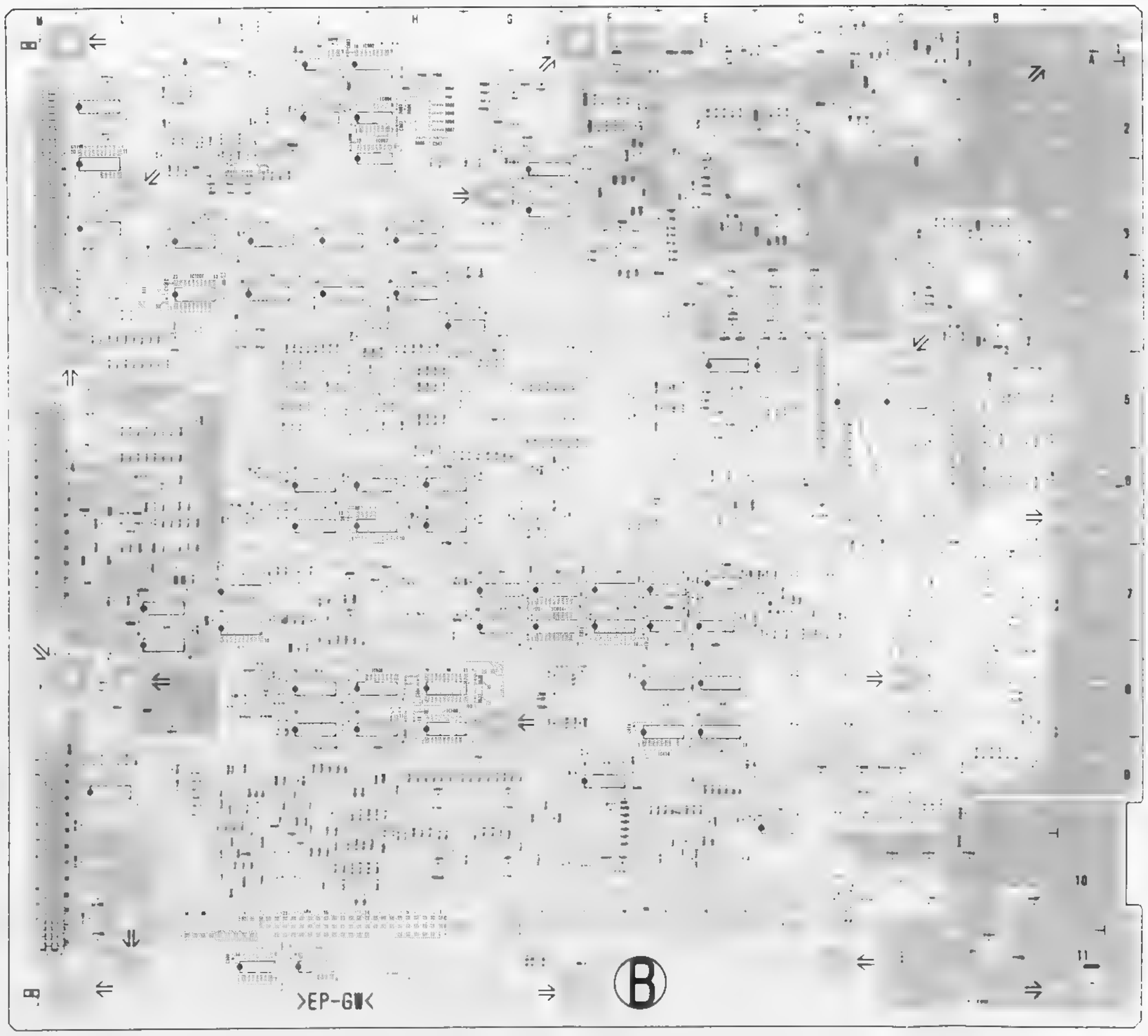

* IC902		RB405		TP304			
* IC903		RB406		TP401			
* IC904		RB407		TP403			
IC905		RB501		TP701			
IC906		RB502		TP801			
* IC907		RB503		TP802			
IC1001		RB504		TP803			
IC1002		RB505		TP804			
IC1003		RB506		TP805			
IC1005		RB507		TP806			
IC1006		RB508		TP807			
IC1007		RB509		TP808			
IC1008		RB510		TP809			
IC1009		RB511		TP1101			
IC1010		RB512		TP1102			
IC1011		RB513		TP1103			
IC1012		RB514		TP1104			
IC1013		RB515		TP1105			
IC1014		RB516		TP1106			
IC1015		RB517		TP1107			
* IC1101		RB518		TP1108			
* IC1102		RB519		TP1109			
* IC1103		RB520		TP1110			
* IC1104		RB601					
* IC1105		RB602		T1001	B10		
* IC1201		RB603					
* IC1202		RB604		X501	J10		
* IC1203		RB701		X701	J5		
* IC1204		RB702		X801	L7		
* IC1205		RB703		X1001	B11		
* IC1206		RB704					
* IC1207		RB705					
		RB706					
L101		RB707					
L102		RB708					
L103		RB709					
L105		RB710					
L106		RB711					
L201		RB712					
L202		RB713					
L203		RB714					
L205		RB715					
L206		RB716					
L301		RB717					
L302		RB718					
L303		RB719					
L305		RB720					
L306		RB801					
L307		RB802					
L308		RB803					
L309		RB804					
L310		RB805					
L311		RB806					
L312		RB1001					
L313		RB1002					
L314		RB1003					
L1001		RB1004					
		RB1005					
Q102		RB1101					
Q103		RB1102					
Q104	A4	RB1103					
Q105	B4	RB1104					
Q202	E3	RB1105					
Q203	E3	RB1106					
Q204	D3	RB1107					
Q205	E3	RB1108					
Q301	C2	RB1201					
Q302	C1	RB1202					
* Q303	C1	RB1203					
		RB1204					
RB101	C6	RB1205					
RB102	C6	RB1206					
RB103	C6	RB1207					
RB104	C5	RB1208					
RB105	C5	RB1209					
RB106	D5	RB1210					
RB107	C7	RB1301					
RB201	D6						
RB202	D6	RV101					
RB203	D5	RV201					
RB204	D5	RV301					
RB205	E5						
RB206	E6	S401					
RB301	G3	S501					
RB302	G3	S1001					
RB303	G2						
RB304	E5	TP103					
RB401	K3	TP104					
RB402	K3	TP201					
RB403	E9	TP204					
RB404	E9	TP303					

ESBK-7031

IO-119
PART NO 1-662-795-11
MODEL ESBK-7031
-B SIDE-

IO-148 : SDI I/F BOARD

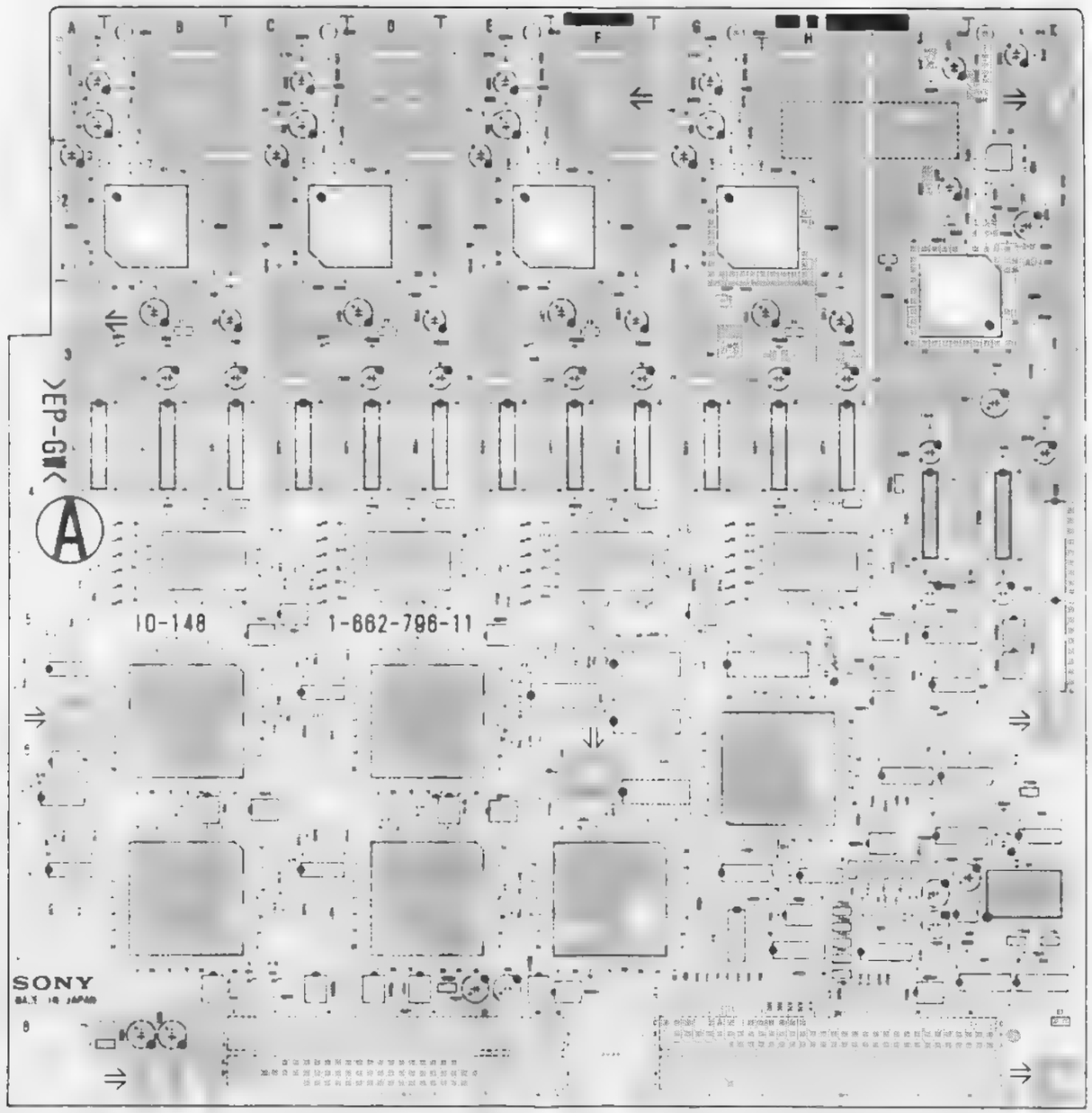

IO-148
PART NO 1-662-796-11
MODEL ESBK-7032
-A SIDE-

IO-148 (1-662-796-11)

* : B SIDE

* CN21	K8	* IC24	A6
* CN22	F8	IC25	A5
* CN23	G8	* IC26	B6
* CN24	C8	IC201	C2
CN31	B1	IC203	D3
CN32	C1	IC204	D3
CN33	E1	IC205	C3
CN34	G1	IC207	D5
CN35	K1	* IC208	D4
		* IC209	D4
* D2	B3	* IC210	D5
D4	B4	* IC211	D5
D5	B5	IC215	B7
D8	B4	* IC217	C7
D9	B5	* IC218	B7
* D202	D3	* IC219	C7
D204	C4	* IC220	C7
D205	C5	* IC221	B7
D208	C4	* IC222	A7
D209	C5	* IC223	A7
* D302	F3	* IC224	A7
D304	E4	IC225	A7
D305	E5	* IC226	B7
D308	E4	IC301	E2
D309	E5	IC303	F3
* D402	H3	IC304	F3
D404	G4	IC305	E3
D405	G5	IC307	F5
D408	G4	* IC308	F4
D409	G5	* IC309	F4
D412	G3	* IC310	F5
* D501	K3	* IC311	F5
* D502	K3	IC315	D6
D504	B3	* IC317	E5
D505	C3	* IC318	D5
D506	E3	* IC319	E6
D601	C8	* IC320	E6
D602	C8	* IC321	D6
D801	J6	* IC322	D5
D803	B4	* IC323	D6
D804	C4	* IC324	C6
D805	E4	IC325	C6
D806	G4	* IC326	D6
D807	B5	IC401	G2
D808	C5	IC403	H3
D809	E5	IC404	G3
D810	G5	IC405	G3
		IC407	H5
E1	B3	* IC408	H4
E2	D3	* IC409	G4
E3	F3	* IC410	H5
E4	H3	* IC411	G5
E5	J2	* IC415	E7
E6	A8	IC416	D7
E7	K8	* IC418	E7
FB1	C3	* IC419	D7
FB2	C3	* IC420	E7
FB3	B3	* IC421	D7
FB201	D3	* IC422	D7
FB202	D3	* IC423	D7
FB203	D3	* IC424	C7
FB301	F3	IC425	C7
FB302	F3	* IC426	D7
FB303	F3	IC501	G7
FB401	H3	IC502	G7
FB402	H3	IC503	F7
FB403	H3	IC504	H6
FB601	J7	* IC505	F6
FB604	K6	* IC506	F5
		IC507	F6
IC1	A2	IC508	F5
IC2	J6	IC509	F6
IC3	B3	IC510	F6
IC4	B3	IC511	H5
IC5	A3	IC512	K4
IC6	J6	IC513	K2
IC7	B5	IC514	J4
* IC8	C4	IC515	K2
* IC9	B4	IC601	H7
* IC10	C5	IC602	K8
* IC11	B5	IC603	K8
* IC12	J6	IC604	J7
* IC13	J6	IC605	J7
* IC15	C6	IC606	K7
IC16	B6	* IC607	G7
* IC18	C5	* IC608	H7
* IC19	B5	* IC609	H7
* IC20	C6	IC610	H7
* IC21	B6	* IC611	G7
* IC22	A5	* IC612	H7
* IC23	B6	* IC613	J7

ESBK-7032

* IC614	F7	
* IC615	F7	
IC701	A6	
IC801	J7	
* IC802	E6	
* IC803	G6	
* IC804	G6	
* IC805	G5	
* IC806	G6	
* IC807	G6	
IC809	J5	
* IC810	H6	
IC811	J5	
* IC812	H6	
* IC813	J5	
* IC814	J8	
* IC815	J8	
L1	A1	
L2	C2	
L3	A1	
* L4	B3	
* L5	C3	
L201	C1	
L202	D2	
L203	C1	
* L204	D3	
* L205	D3	
L301	E1	
L302	F2	
L303	E1	
* L304	F3	
* L305	F3	
L401	G1	
L402	H2	
L403	G1	
* L404	H3	
* L405	H3	
L501	K4	
L502	H5	
L503	J5	
L504	H5	
L505	K4	
L506	K3	
L508	K2	
L509	J2	
L510	J4	
L511	J5	
L512	K5	
L513	K1	
L514	J1	
Q1	B3	
Q3	B3	
Q4	B1	
Q5	A2	
Q201	C3	
Q203	C3	
Q204	C1	
Q205	C2	
Q301	E3	
Q303	E3	
Q304	E1	
Q305	E2	
Q401	G3	
Q403	G3	
Q404	G1	
Q405	G2	
* Q406	G3	
Q501	K3	
Q502	K2	
Q503	K2	
RB1	C5	
RB3	C5	
RB4	B6	
RB203	C6	
RB204	B8	
RB301	G5	
RB303	E5	
RB304	E6	
RB403	E6	
RB404	E8	
RB601	H7	
RB701	A6	
RB801	J8	
RB802	J5	
RB803	J6	
RB804	J7	
RB805	E6	
RB806	K5	
RB807	K5	
RB808	J5	
RB901	D8	
RB902	D8	
RB903	F8	
RB904	C8	
RV11	A2	
RV201	C2	
RV301	E2	
RV401	G2	
RV501	K3	
S803	K4	
S804	K5	
TP2	C4	
TP202	D4	
TP302	F4	
TP402	H4	
TP503	J4	
TP601	H8	
TP602	H7	
TP603	H7	
TP604	H7	
TP605	H7	
TP606	K7	
TP607	K7	
TP608	K6	
TP801	J7	
TP802	J7	
TP803	J7	
TP804	H7	
TP805	H7	
TP901	E8	
TP902	A8	
X601	K7	

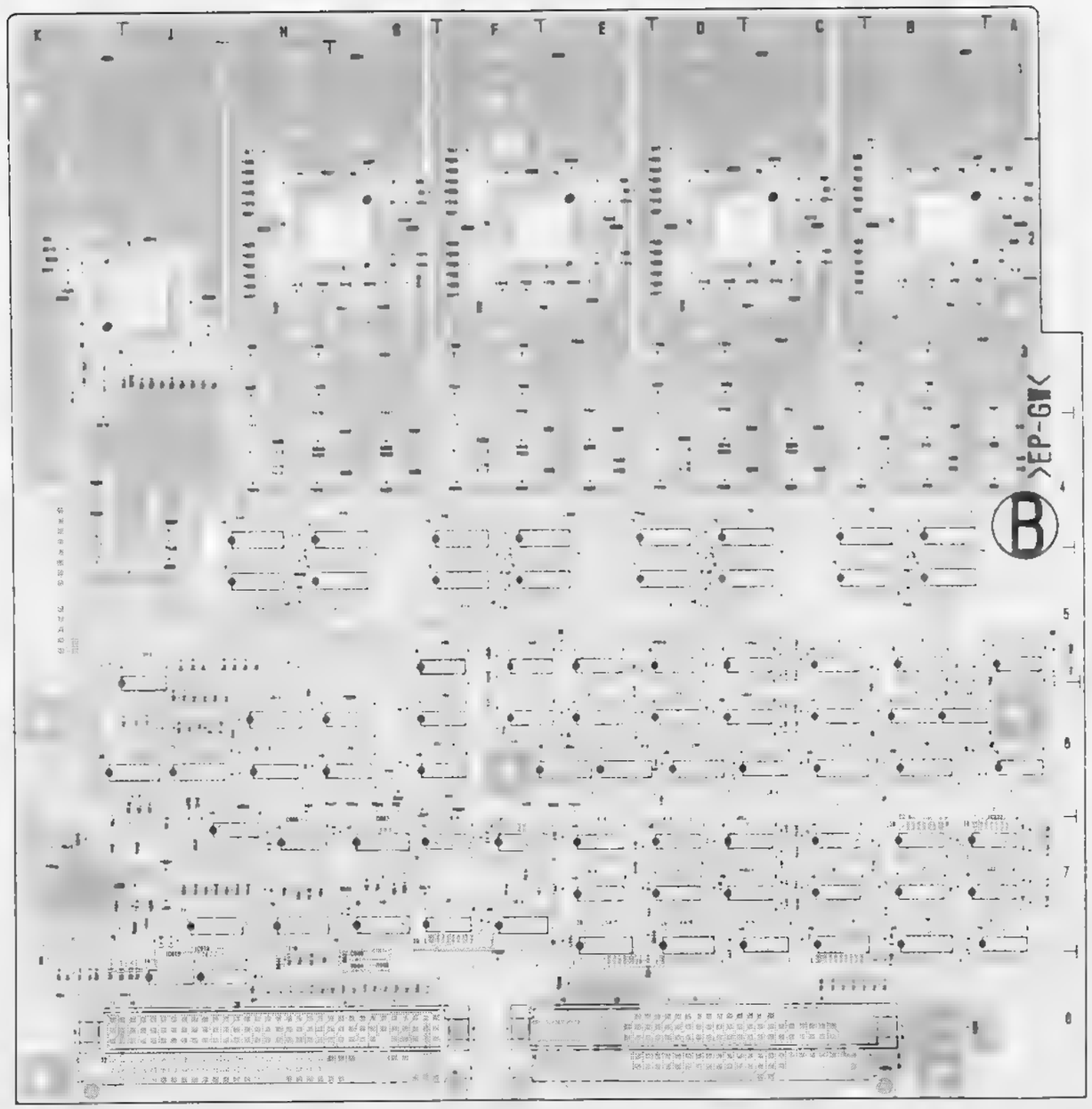

IO-148
PART NO 1-662-796-11
MODEL ESBK-7032
-B SIDE-

ESBK-7032

MPU-95 : DISK UNIT CONTROL BOARD

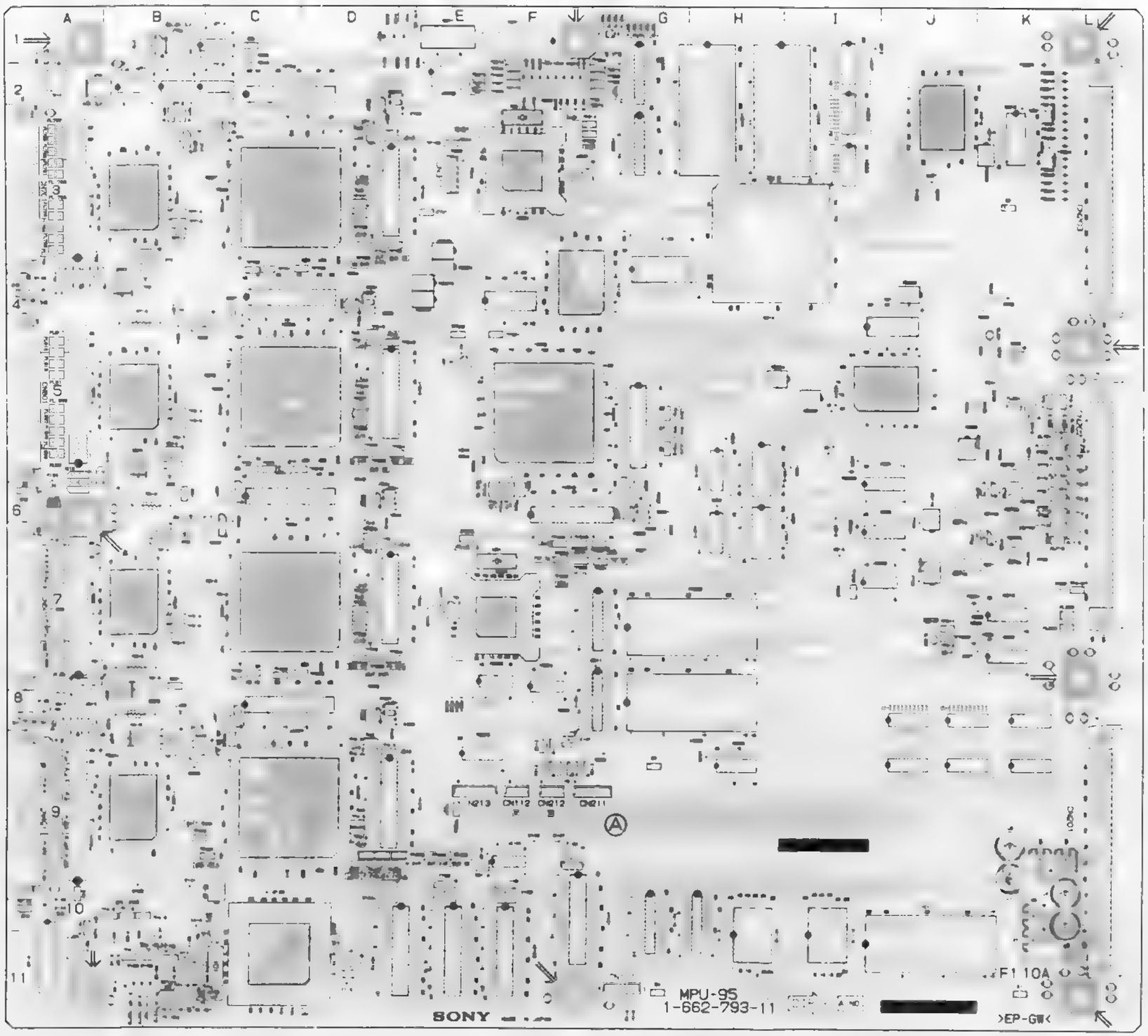

MPU-95 (1-662-793-11)

• B SIDE

CN111	I11	• FL304	H7	FL735	A2
CN208	M8	• FL305	B7	• FL736	A2
CN209	M8	FL306	B7	FL737	A2
CN303	F7	FL401	A7		
CN304	H7	• FL402	A7	F1	K10
CN314	H3	FL403	A7		
		• FL404	A7	IC101	F7
CN111	I11	FL405	A7	• IC103	B10
CN112	I10	• FL406	A7	• IC104	A2
CN201	L3	FL407	A7	• IC105	F7
CN202	L4	• FL408	A7	• IC106	F7
CN203	L5	FL409	A7	• IC107	F7
CN211	L2	• FL410	A7	• IC108	F7
CN212	L1	FL411	A7	• IC109	F7
CN213	L0	• FL412	A7	• IC110	F7
CN311	I1	FL413	A7	IC111	F7
CN401	A10	FL414	A7	IC112	H7
CN501	A1	FL415	A7	IC113	F7
CN601	A5	• FL416	A7	IC114	H7
CN701	A1	FL417	A7	IC115	F7
		FL418	A7	• IC116	F7
D101	A4	FL501	A8	• IC117	F7
D102	A8	• FL502	A8	IC118	E7
D103	A9	FL503	A8	IC119	B7
D104	A7	• FL504	A8	• IC122	F7
D105	B10	FL505	A8	• IC123	F7
D106	B9	FL506	A	• IC124	F7
D107	H7	FL507	A	• IC125	B7
D108	B10	• FL508	A7	• IC126	F7
D201	L7	FL509	A	• IC127	F7
D202	L7	FL510	A	IC128	F7
D203	L7	FL511	A	IC129	F7
D301	I7	FL512	A7	IC130	F7
D302	I7	FL513	A	IC131	F7
D303	I7	FL514	A	IC201	F7
D304	F7	FL515	A	IC202	F7
D305	F7	FL516	A	IC204	F7
D306	F7	FL517	A7	IC205	F7
D307	F7	FL518	A	IC206	F7
D308	F7	FL601	A8	• IC207	F7
		• FL602	A8	IC208	F7
E1	K10	FL603	A8	IC209	F7
E2	K10	FL604	A7	IC210	F7
E3	K10	FL605	A7	IC211	F7
E4	K10	FL606	A7	• IC212	F7
E5	K10	FL607	A7	IC213	F7
E401	A10	• FL608	A7	• IC214	F7
E501	A8	FL609	A7	IC215	F7
E601	A5	• FL610	A7	• IC216	F7
E701	I1	FL611	A7	• IC217	F7
E901	F10	• FL612	A7	IC218	F7
		FL613	A7	IC219	F7
FB201	L7	• FL614	A7	IC220	F7
FB202	L7	FL615	A4	• IC221	F7
FB203	L7	• FL616	A4	• IC222	F7
FB204	L7	FL617	A4	• IC223	F7
FB205	L7	• FL618	A4	IC224	F7
• FB206	L7	FL701	I1	IC301	I7
• FB207	L7	FL702	I1	• IC302	I7
FB208	L7	FL703	I1	IC303	I7
• FB209	L7	FL704	H7	IC304	H7
• FB210	L7	• FL705	H7	IC305	I7
• FB211	L7	FL706	I6	IC306	I7
• FB212	L7	FL707	H7	IC307	I7
• FB213	L7	• FL708	H7	IC308	I7
• FB214	L7	FL709	I5	IC309	I3
• FB215	L7	FL710	H6	IC310	I5
FB216	L7	• FL711	H7	IC311	I4
FB217	L7	FL712	I7	• IC312	H5
FB218	L7	FL713	H7	• IC313	H5
FB219	L7	• FL714	H7	IC314	H10
FB220	L7	FL715	I7	IC315	H8
FB221	L7	FL716	H7	IC316	H8
FB222	L7	FL717	H5	IC317	H8
FB223	L7	FL718	I	IC318	H8
FB224	L7	• FL719	H7	IC319	I7
FB225	L7	FL720	A7	IC320	H8
FB226	H7	• FL721	A3	IC321	J8
FB301	I7	FL722	A7	IC322	J8
FB302	I7	• FL723	A3	• IC323	H4
FB303	I7	FL724	A7	• IC324	H4
FB304	I7	• FL725	A7	IC401	D8
FB401	A10	FL726	A7	IC402	D8
• FB501	A8	• FL727	A7	IC403	D8
• FB601	B5	FL728	A3	IC404	J8
• FB701	A1	FL729	A7	IC405	B10
• FB702	B1	FL730	A7	IC406	A7
• FB703	B4	FL731	A7	• IC407	B7
FL301	B7	FL732	A8	• IC408	I7
• FL302	B4	FL733	A8	• IC409	B7
FL303	B7	• FL734	A8	IC501	D6

MPU-95
PART NO. 1-662-793-11
MODEL ESBK-7041
-A SIDE-

ESBK-7041

IC502	C7	RB717	J5	TP618	B4
IC503	D7			TP701	
IC504	C6	S101	A2	TP702	
IC505	B7	S102	A10	TP703	
IC506	A8	S201	E1	TP704	
IC601	D4	S301	F1	TP705	
IC602	C5			TP706	
IC603	D5	TP101	B11	TP707	
IC604	C4	TP102	B11	TP708	
IC605	B5	TP103	B11	TP709	
IC606	A6	TP104	B11	TP710	
IC701	D2	TP105	A10	TP711	
IC702	C3	TP106	A8	TP712	
IC703	D3	TP107	A6	TP713	
IC704	C2	TP108	A4	TP714	
IC705	B3	TP109	E2	TP716	
IC706	A3	TP110	B11	TP717	
* IC708	J6	TP111	B11	TP718	
* IC709	J7	TP112	B11	TP901	
* IC710	K6	TP113	B11	TP902	
IC711	B2	TP114	B11	TP903	
IC712	B2	TP115	A11	TP904	
IC713	C2	TP116	B10	TP905	
IC714	C1	TP117	B11	TP906	
IC901	G6	TP201		TP907	
IC902	F5	TP202		TP908	
IC903	F6	TP203		TP909	
IC904	G5	TP204		TP910	
IC908	I7	TP205		TP911	
		TP206		TP912	
L1	K10	TP301			
L2	K10	TP302		X701	
L3		TP303		X702	
L4	K10	TP304			
L401	B8	TP305			
L402	B8	TP306			
L501	B6	TP307			
L502	B6	TP308			
L601	B4	TP309			
L602	B6	TP310			
L701	B2	TP311			
L702	B4	TP312			
L901	E5	TP313			
		TP314			
Q401	B9	TP401			
* Q402	B8	TP402			
Q501	B8	TP403			
Q502	B8	TP404			
Q601	B6	TP405			
* Q602	B6	TP406			
Q701	B4	TP407			
* Q702	A4	TP408			
		TP409			
RB101	A11	TP410			
* RB102	D11	TP411			
* RB103	D11	TP412			
* RB104	D10	TP413			
* RB105	C11	TP414			
* RB106	C11	TP415			
* RB107	C11	TP416			
RB108	B11	TP417			
RB109	C10	TP418			
* RB110	C10	TP419			
* RB111	F4	TP501			
RB112	E10	TP502			
* RB201	E8	TP503			
* RB202	F7	TP504			
RB203	I5	TP505			
RB204	H5	TP506			
RB205	K2	TP507			
* RB301	F3	TP508			
* RB302	F3	TP509			
* RB303	E2	TP510			
* RB304	J3	TP511			
RB305	J4	TP516			
* RB306	J6	TP517			
* RB307	J6	TP518			
RB701	K6	TP601			
RB702	K6	TP602			
RB703	K6	TP603			
RB704	K6	TP604			
RB705	K6	TP605			
RB706	K6	TP606			
RB707	K6	TP607			
RB708	K7	TP608			
RB709	J6	TP609			
RB710	J6	TP610			
RB711	J7	TP611			
RB712	J7	TP612			
* RB713	J6	TP616			
* RB714	J7	TP617			

ESBK-7041

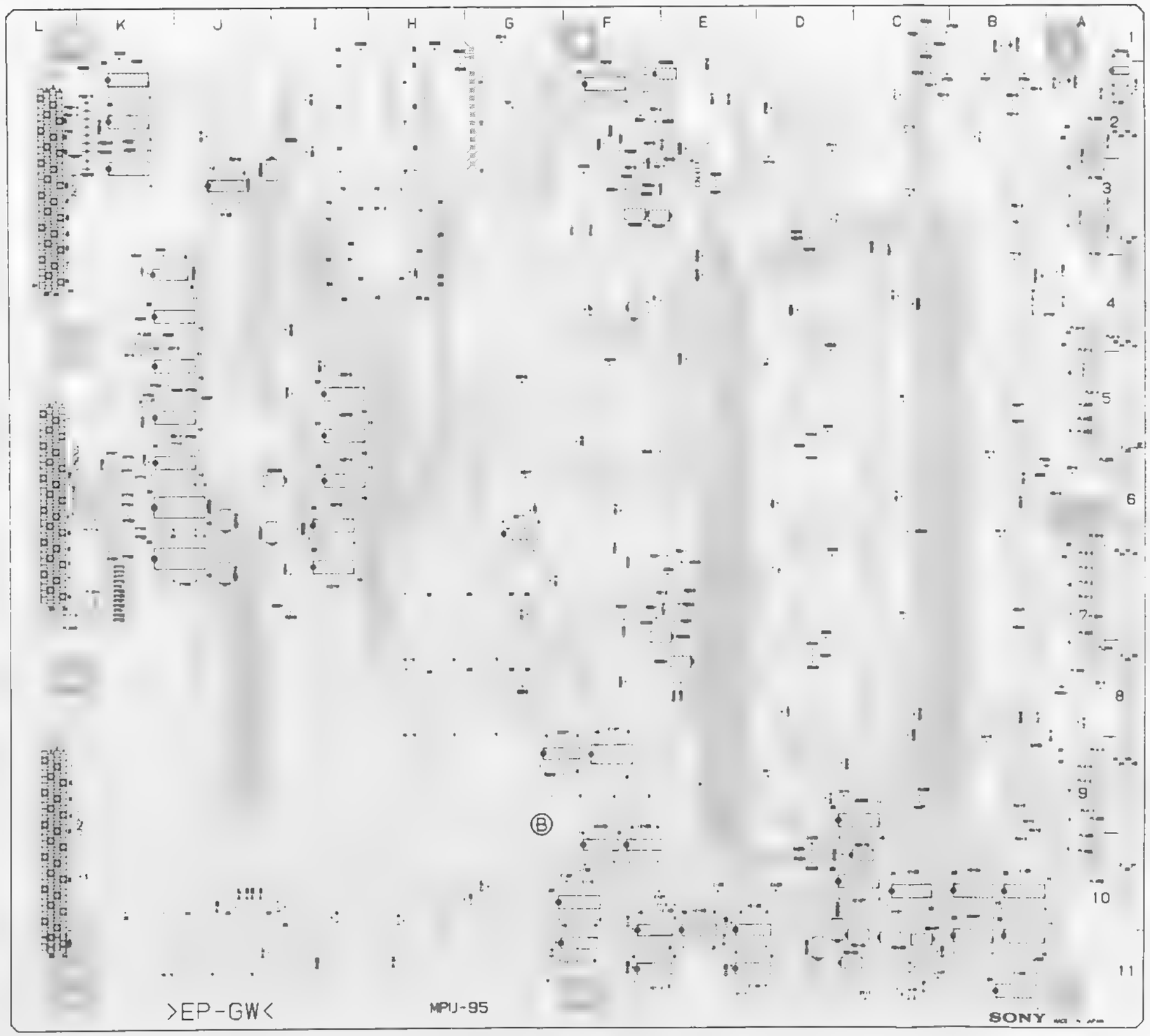

MPU-95
PART NO 1-662-793-11
MODEL ESBK-7041
-B SIDE-

RP-89/89A : REC/PLAY BOARD

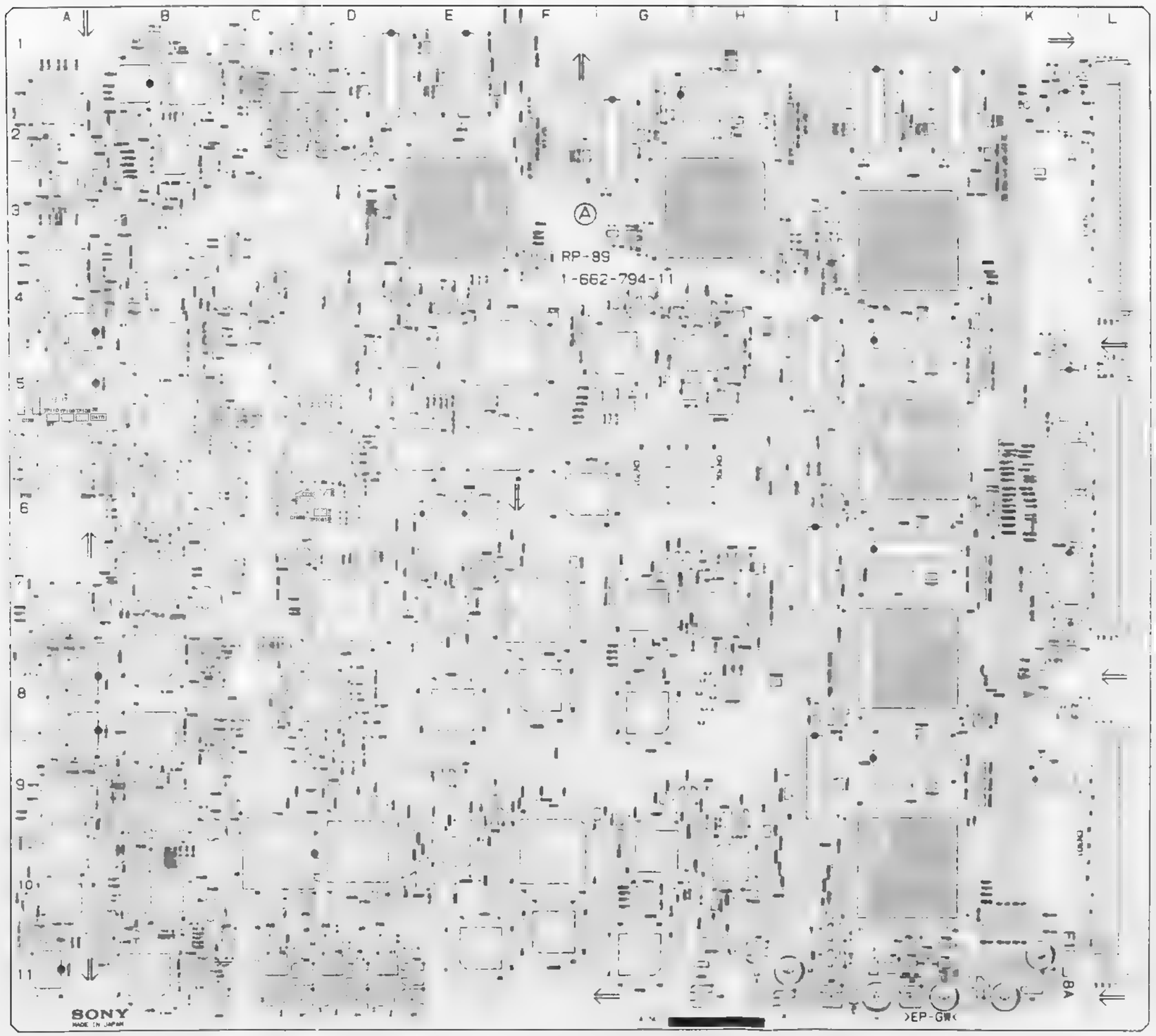

3-36 3-36

RP-89/89A (1-662-794-11)

* B SIDE

CN763	C10	*	FL11			IC732	F6
(RP-89A ONLY)			FL12			IC733	F5
			FL13		*	IC760	D5
CN301	L9		FL14			(RP-89A ONLY)	
CN302	L5	*	FL15		*	IC761	E5
CN303	L2		FL16			(RP-89A ONLY)	
CN701	G6		FL17		*	IC762	E4
CN702	H6		FL18			(RP-89A ONLY)	
					*	IC764	D10
CT701	D6		F1			(RP-89A ONLY)	
CT702	D9				*	IC765	K3
			IC1		*	IC766	K4
D1	C1		IC2		*	IC767	K4
D2	C1		IC3			IC768	D4
D3	D11	*	IC4			(RP-89 ONLY)	
D4	D11	*	IC5			IC769	E4
D5	D11		IC6			(RP-89A ONLY)	
D6	-	*	IC7			IC770	G4
D7	D1	*	IC8		*	IC771	E7
D8	D1		IC9			(RP-89A ONLY)	
D9	C11	*	IC10		*	IC772	D10
D10	C11		IC11			(RP-89A ONLY)	
* D101	C6	*	IC12		*	IC773	D4
* D201	C7	*	IC13			IC774	E6
* D301	C9		IC14			IC776	E6
* D401	C10	*	IC15			IC801	J8
* D501	C4		IC16			IC802	I7
* D1001	D6		IC17			IC803	J7
* D1002	D6		IC18			IC804	H7
* D1003	D8		IC19			IC830	F7
* D1004	D9		IC20			IC831	E8
			IC21			IC832	G8
E1	C2		IC101			IC833	F8
E2	D11		IC102		*	IC860	E8
E3	D11		IC103			(RP-89A ONLY)	
E4	D2		IC104		*	IC861	E8
E5	C11		IC105			(RP-89A ONLY)	
E101	G3	*	IC108			IC862	
E102	B6	*	IC110			(RP-89A ONLY)	
E103	A6		IC111		*	IC863	I8
E202	B7		IC112		*	IC864	I7
* E203	A7		IC113			IC865	D7
E301	I4	*	IC114			(RP-89 ONLY)	
E302	B9		IC204			IC866	E7
E303	A10		IC205			(RP-89A ONLY)	
E402	B11	*	IC208			IC867	G7
* E403	A10	*	IC210			IC901	J10
E501	D3		IC211			IC902	I9
E502	B3		IC213			IC903	J9
E503	A2	*	IC214			IC904	H10
* E603	A4		IC301			IC930	F10
E701	I6		IC302			IC931	E11
E702	H4		IC303			IC932	G11
E730	F4		IC304			IC933	F10
E760	D10		IC305		*	IC960	E10
E761	G4	*	IC308			(RP-89A ONLY)	
E762	C4	*	IC310		*	IC961	G10
E763	E4		IC311			(RP-89A ONLY)	
E801	I8		IC312		*	IC962	F9
E803	H7		IC313			(RP-89A ONLY)	
E830	F7	*	IC314		*	IC963	I10
E860	D7		IC404		*	IC964	I9
E861	E7		IC405			IC965	D10
E862	G7	*	IC408			(RP-89 ONLY)	
E901	I10	*	IC410			IC966	E10
E903	H9		IC411			(RP-89A ONLY)	
E931	G9		IC413			IC967	G10
E960	D9	*	IC414			IC1001	D6
E961	E9		IC501			IC1002	D8
E962	G9		IC502		*	IC1003	D8
E1001	C6		IC503		*	IC1004	E8
E1002	C8		IC504		*	IC1005	D2
* E1003	K2		IC505				
* E1004	E10	*	IC508			LV107	C6
* E1005	E5	*	IC509			LV207	B7
* E1006	I5	*	IC510			LV307	C9
* E1007	J6		IC511			LV407	C10
* E1008	D8	*	IC512			LV507	B4
* E1009	F8	*	IC513				
* E1010	J10	*	IC515			L1	K11
			IC516			L2	I11
* FL1	J11		IC518			L3	J11
* FL2	J11		IC604			L4	K11
* FL3	J11		IC605			L5	H11
* FL4	J11		IC611			L101	G2
* FL5	K7		IC701			L102	H4
* FL6	I11		IC702			L103	C5
* FL7	K10		IC703			L106	B6
* FL8	K9		IC704			L108	C6
FL9	K6		IC730			L111	A5
* FL10	K9		IC731			L203	C8

RP-89/89A
PART NO 1-662-794-11
MODEL ESBK-7041
-A SIDE-

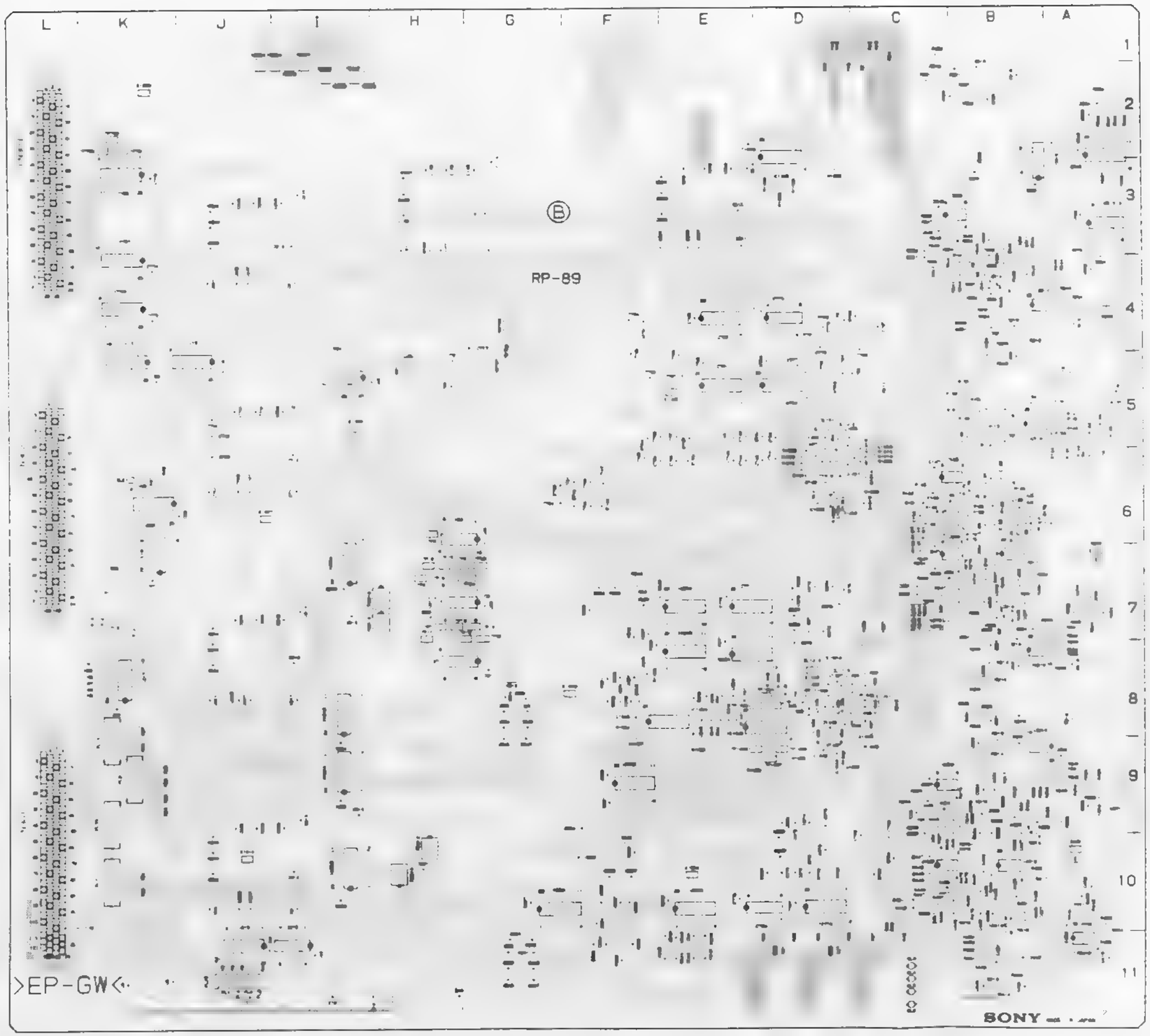

L211	A8	RB806	G7	TP318
L302	K4	* RB812	H7	TP407
L303	C9	* RB813	H7	TP408
L502	F4	RB905	H9	TP506
L505	C3	* RB912	H10	TP509
L603	C5	RB962	E9	TP513
L702	J6	TP1	C2	TP517
L1003	C8	TP28	I4	TP767
* RB3	K9	TP33	J11	TP805
* RB6	K9	TP36	K8	TP808
* RB8	K9	TP38	K8	TP861
* RB17	C5	TP109	A5	TP907
* RB19	G8	TP114	G2	TP909
RB701	G4	TP117	H2	TP963
RB716	G5	TP218	B7	* TP1007 D9
* RB717	H5	TP301	K2	* TP1008 E9
RB761	D4	TP302	K3	
RB762 (RP-89A ONLY)	D4	TP304	I4	
RB763	D5	TP305	I4	
RB764 (RP-89 ONLY)	D5	TP306	B8	
RB801	I8	TP308	A9	
RB803	I8	TP309	A9	
		TP310	A9	
		TP315	I2	

ESBK-7041

RP-89/89A
PART NO 1-662-794-11
MODEL ESBK-7041
-B SIDE-

SECTION 4
SEMICONDUCTOR PIN ASSIGNMENTS

ここに記載されている半導体は，それぞれの機能を等価的に表したものです。 なお，互換性のない型名を併記していることがありますので，部品を交換するときは，Spare Partsの章を参照してください。
等価回路はＩＣメーカーのデータブックに従いました。

Semiconductors of which functions are equivalent are described here. For parts replacement, refer to the section of Spare Parts in this manual. The circuit diagram of each IC is obtained from the IC data book published by the manufacturer.

DIODE	PAGE
1N4148M	4-4
1N4148M-TP	4-4
1S2835-T1	4-4
1S2836	4-4
1S2837-T1	4-4
1SS119-25	4-4
1SS119-25TD	4-4
1SS123-T1	4-4
1SS184	4-4
1SS226	4-4
1SS300-TE85L	4-4
1SS303	4-4
1SS303-T1	4-4
AU02A	4-4
CL-150PG-CD	4-4
CL-150PG-CD-T	4-4
CL-150R-CD	4-4
CL-150R-CD-T	4-4
DA204U	4-4
DA204UT106	4-4
ERA81-004TP3	4-4
ERA83-006	4-4
ERC62M-004	4-4
ERC80M-004	4-4
HSM88WK-TL	4-4
KV1460TL00	4-4
KV1470	4-4
KV1470TL00	4-4
KV1851A-1	4-4
LD-701MG	4-4
MA141WK	4-4
RD10F-T7B1	4-4
RD2.4M-B	4-4
RD2.4M-T1B	4-4
RD2.7ES-T1B	4-4
RD22F-T7B2	4-4
RD3.9M-B1	4-4
RD3.9M-T1B	4-4
RD33F-T7B2	4-4
RD6.2ES-B2	4-4

DIODE	PAGE
RD6.2ES-T1B	4-4
RD7.5ES-T1B	4-4
RD7.5ESB2	4-4
S15VB60	4-4
S16L60	4-4
SB01-05CP	4-4
SB01-05CP-TB	4-4
TLR124	4-4

TRANSISTOR	PAGE
2SA1162-G	4-5
2SA1385-Z-M	4-5
2SA1611-M5M6	4-5
2SA1611T1-M5M6	4-5
2SA812-T1-M5M6	4-5
2SB1115A-T1YP	4-5
2SB1115A-YQ	4-5
2SC1623-L5L6	4-5
2SC1623-T1-L5L6	4-5
2SC1815YGR-TPE2	4-5
2SC2785-HFE	4-5
2SC2785TP-HFE	4-5
2SC3356-K	4-5
2SC3356-T1K	4-5
2SC4159-E	4-5
2SC4177-L6	4-5
2SC4177-T1L5L6	4-5
2SK2234	4-5
2SK508-K51	4-5
2SK508-T1K51	4-5
DTA124EKA-T146	4-5
DTA144EUA-T106	4-5
DTC114EU	4-5
DTC114YSA-TP	4-5
DTC124TKA-T146	4-5
DTC144EKA-T146	4-5
DTC144EUA-T106	4-5
FMS1	4-5
FMS1-T-148	4-5
FMW1	4-5
FMW1-T-148	4-5
FMY3	4-5
FMY3-T-148	4-5
IMX1	4-5
IMX1T110	4-5

MISCELLANTEOUS	PAGE
DS1000Z-50(TE2)	4-6
PC817Y2	4-6
TLP521-1-A	4-6

IC	PAGE
74AC00SJ	4-6
74AC00SJX	4-6
74AC138SJ	4-6
74AC138SJX	4-6
74AC157SJX	4-7
74AC175SJ	4-7
74AC175SJX	4-7
74AC374SJ	4-7
74AC374SJX	4-7
74AC74SJ	4-7
74AC74SJX	4-7
74ACT399SJX	4-8
74F283SJ	4-8
74F283SJ-T5R	4-8
74F32SJ	4-62
74F32SJ-T5R	4-62
74F521SJ	4-8
74F521SJ-T5R	4-8
74F574SJ	4-58
74F646SCX	4-78
A80502-66100	4-8
AD1890JP	4-79
AK5326-VP	4-10
AM26LS31CNS	4-10
AM26LS31CNS-E05	4-10
AM26LS32ACNS	4-10
AM26LS32ACNS-E05	4-10
AM27S19PC	4-78
AM29F200B-75EC	4-79
BA10358F-E2	4-10
BA7046F	4-10
BA7046F-E2	4-10
BP3510	4-80
CX22017	4-11
CX22017-TH	4-11
CX22029	4-80
CX22029-T6	4-80
CXA1260Q-TH-Z	4-11
CXA1260Q-Z	4-11
CXA1389AQ	4-80
CXA1432M	4-11
CXA1432M-T4	4-11
CXA1451M	4-15
CXA1451M-TH	4-15
CXD1175AM-TH	4-12
CXD1216M	4-12
CXD1216M-TH	4-12

DEX

IC	PAGE
CXD1217M	4-14
CXD1217M-TH	4-14
CXD2105AQ	4-16
CXD2183R	4-81
CXD2190R-T6	4-96
CXD2191R	4-98
CXD2191R-T6	4-98
CXD2705AQ	4-13
CXD8033Q	4-15
CXD8156Q	4-17
CXD8176AQ	4-81
CXD8264Q	4-18
CXD8266Q	4-18
CXD8267Q	4-19
CXD8278AQ	4-82
CXD8280AQ	4-83
CXD8281Q	4-84
CXD8307Q	4-13
CXD8337Q	4-85
CXD8558Q	4-20
CXD8559Q	4-21
CXD8560Q	4-22
CXD8596Q	4-24
CXD8597Q	4-26
CXD8613Q	4-28
CXD8839Q	4-23
CXD8871Q	4-30
CXD8872Q	4-32
CXD8878Q	4-31
CXD8879Q	4-34
CXD8885Q	4-86
CXD8890Q	4-35
CXD8925Q	4-29
CXD8926Q	4-36
CXD8927Q	4-37
CXD8936Q	4-38
CXD8969AR	4-87
CXK1206AM	4-39
CXK581000AM-70LL	4-40
CXK581000AM-70LL-TL	4-40
CXK58257AM-10LLT6	4-32
CY27H010-45JC	4-78
CY7C128A-25VCTEL	4-39
CY7C136-55JC	4-87
CY7C185-25VC	4-40
CY7C185-25VCTEL	4-40
CY7C194-25VC	4-41
CY7C194-25VCTEL	4-41
CY7C199-15VC	4-41
CY7C199-20VC	4-41
CY7C291A-35PC	4-42
EPM7032LC44-15	4-42
EPM7160ELC84-20	4-88
GAL16V8B-15LP	4-43
GAL20V8B-25LP	4-43
HD14053BFP	4-43
HD6417032F20	4-88
HD6437021C02X	4-99
HM530281-20	4-43
HM530281RTT-20	4-43
HM62V256LT8Z	4-90
HN27C4096ACC-12	4-44
IDT6116SA25S0	4-44
IDT6116SA25SO-T	4-44
IDT71321SA55J-TL	4-77
IDT71421SA55J-TL	4-77
IDT74FCT821ATS0	4-90
LB1721M	4-90
LB1721M-TE-R	4-90
LC74760M-9070-TLM	4-45
LM1881M	4-46
LM1881M-FL63	4-46
LM311M-FL63	4-46
LM311PS	4-46
LM358PS	4-10
LM358PS-E20	4-10
LM7912CT	4-46
LT1074CT	4-46
LT1171CT	4-46
LT1252CS8	4-46
LT1252CS8-E2	4-46
M27C1001-10F1	4-91
M27C1001-70F1	4-91
M27C1024-80XF1	4-47
M27C4001-12F1	4-47
M27C512-12F1	4-48
M48Z58Y-70MH1TR	4-98
M51271FP	4-48
M51958AFP600D	4-91
MAX232CPE	4-49
MAX232CWE	4-49
MAX232CWE-TE-2	4-49
MAX232N	4-49
MBM29F400BA-12PF	4-49
MC10124P	4-91
MC10125P	4-91
MC14001UBCP	4-48
MC14002BCP	4-49
MC14053BF	4-43
MC14053BFEL	4-43
MC14538BCP	4-49
MC14577CF	4-49
MC14577CFEL	4-49
MC34050ML	4-50
MC34051MEL	4-50
MC74F04M	4-91
MC74F04M-T2	4-91
MC74HC163AF	4-50
MC74HC390F	4-50
MC74HC4078F	4-91
MC74HC4078FEL	4-91
MSM514256BL-70ZS	4-51
NJM2230M	4-51
NJM2230M(TE2)	4-51
NJM2233BM	4-51
NJM2233BM(TE2)	4-51
NJM2235M-TE2	4-51
NJM2245M	4-52
NJM2245M-T2	4-52
NJM2246M	4-51
NJM2246M(TE2)	4-51
NJM4558D	4-52
NJM4560S	4-52
NJM5532D-D	4-52
NJM7809FA	4-52
NJM78L05A	4-52
NJM78L05A-T1	4-52
NJM78L09A-T1	4-52
NJM78L09UA(TE1)	4-52
NJM78M05FA	4-52
NJM7905FA	4-46
NJM79L05A	4-52
NJM79L05A-T1	4-52
NJM79L05UA	4-52
NJM79L05UA-TE1	4-52
NJM79L09A	4-52
NJM79L09A-T1	4-52
NJM79M05FA	4-46
NJM79M12FA	4-46
PCM69AP	4-53
PQ05SZ1U	4-53
PQ20VZ5U	4-92
PST572FMT	4-53
S-8054HNM	4-53
S-8054HNM-Z	4-53
S16265NHC	4-53
SBX1601A	4-92
SBX1602A	4-92
SC7S02F	4-54
SC7S32F	4-54
SM5828BP	4-54
SM5843AS1-E2	4-55
SN74ABT16374ADL	4-55
SN74ABT16374DL	4-55
SN74ALS00AN	4-56
SN74ALS00ANS-E05	4-56
SN74ALS02ANS-E05	4-58
SN74ALS04BNS	4-56
SN74ALS04BNS-E20	4-56
SN74ALS08NS	4-92
SN74ALS08NS-E05	4-92
SN74ALS09NS	4-92
SN74ALS138AN	4-56
SN74ALS138ANS-E05	4-56
SN74ALS138NS	4-56
SN74ALS138NS-E05	4-56
SN74ALS153NS	4-56
SN74ALS153NS-E05	4-56
SN74ALS157ANS	4-56
SN74ALS157ANS-E05	4-56
SN74ALS161BNS-E20	4-92
SN74ALS163BNS-E05	4-57
SN74ALS240ANS	4-56
SN74ALS240ANS-E05	4-56
SN74ALS240ANS-E20	4-56
SN74ALS244CN	4-57
SN74ALS244CNS-E05	4-57
SN74ALS244CNS-E20	4-57
SN74ALS245AN	4-57
SN74ALS245ANS	4-57
SN74ALS245ANS-E05	4-57
SN74ALS273NS	4-93
SN74ALS273NS-E05	4-93
SN74ALS32NS	4-62
SN74ALS32NS-E05	4-62
SN74ALS374ANS	4-57
SN74ALS374ANS-E05	4-57
SN74ALS540NS	4-58
SN74ALS540NS-E05	4-58
SN74ALS541NS	4-58
SN74ALS541NS-E05	4-58
SN74ALS574BNS	4-58
SN74ALS574BNS-E05	4-58
SN74ALS574BNS-E20	4-58
SN74ALS74ANS	4-58
SN74ALS74ANS-E05	4-58
SN74ALS86NS	4-93
SN74ALS86NS-E20	4-93
SN74AS02NS-E05	4-58
SN74AS04NS-E05	4-56
SN74AS138NS-E05	4-56
SN74AS32NS-E05	4-58
SN74HC00AN	4-6
SN74HC00ANS	4-6
SN74HC00ANS-E05	4-6
SN74HC02ANS	4-58
SN74HC02ANS-E05	4-58
SN74HC04ANS	4-59
SN74HC04ANS-E05	4-59
SN74HC08ANS	4-59
SN74HC08ANS-E05	4-59
SN74HC10ANS	4-59
SN74HC10ANS-E05	4-59
SN74HC11ANS	4-59
SN74HC11ANS-E05	4-59
SN74HC125ANS	4-93
SN74HC125ANS-E05	4-93
SN74HC132ANS	4-59
SN74HC132ANS-E05	4-59
SN74HC138ANS	4-6
SN74HC138ANS-E05	4-6
SN74HC139ANS	4-59
SN74HC139ANS-E05	4-59
SN74HC148ANS-E05	4-60
SN74HC148NS	4-60
SN74HC14ANS	4-60
SN74HC14ANS-E05	4-60
SN74HC153ANS	4-60
SN74HC153ANS-E05	4-60
SN74HC157ANS	4-7
SN74HC157ANS-E05	4-7

IC	PAGE
SN74HC163ANS-E05	4-50
SN74HC164ANS	4-60
SN74HC164ANS-E05	4-60
SN74HC165ANS	4-61
SN74HC165ANS-E05	4-61
SN74HC174ANS	4-61
SN74HC174ANS-E05	4-61
SN74HC175ANS	4-7
SN74HC175ANS-E05	4-7
SN74HC20ANS	4-60
SN74HC20ANS-E05	4-60
SN74HC21ANS	4-93
SN74HC21ANS-E05	4-93
SN74HC240ANS	4-61
SN74HC240ANS-E05	4-61
SN74HC244ANS	4-61
SN74HC244ANS-E05	4-61
SN74HC245ANS	4-62
SN74HC245ANS-E05	4-62
SN74HC27AN	4-62
SN74HC27ANS-E05	4-62
SN74HC32ANS	4-62
SN74HC32ANS-E05	4-62
SN74HC365ANS	4-62
SN74HC365ANS-E05	4-62
SN74HC373ANS	4-62
SN74HC373ANS-E05	4-62
SN74HC374ANS	4-7
SN74HC374ANS-E05	4-7
SN74HC375ANS	4-62
SN74HC377ANS	4-63
SN74HC377ANS-E05	4-63
SN74HC393ANS	4-63
SN74HC393ANS-E05	4-63
SN74HC540ANS	4-63
SN74HC540ANS-E05	4-63
SN74HC541ANS	4-63
SN74HC541ANS-E05	4-63
SN74HC573BNS-E05	4-64
SN74HC574ANS	4-64
SN74HC574ANS-E05	4-64
SN74HC595ANS	4-93
SN74HC595ANS-E05	4-93
SN74HC74ANS	4-7
SN74HC74ANS-E05	4-7
SN74HC86ANS-E05	4-64
SN74HCT244ANS	4-61
SN74HCT244ANS-E05	4-61
SN74HCT374ANS-E05	4-7
SN74HCT541ANS-E05	4-63
SN74HCT574ANS	4-64
SN74HCT74ANS-E05	4-7
SN74HCU04ANS	4-59
SN74HCU04ANS-E05	4-59
SN74HCU04ANS-E20	4-59
SN74LS00NS	4-56
SN74LS00NS-E05	4-56
SN74LS05NS-E05	4-64
SN74LS06N	4-64
SN74LS123NS	4-64
SN74LS123NS-E05	4-64
SN74LS125ANS	4-93
SN74LS125ANS-E05	4-93
SN74LS164NS	4-65
SN74LS164NS-E05	4-65
SN74LS165ANS	4-65
SN74LS165ANS-E05	4-65
SN74LS244NS	4-57
SN74LS244NS-E05	4-57
SN74LS245NS	4-57
SN74LS245NS-E20	4-57
SN74LS30NS-E05	4-65
SN74LS541NS	4-58
SN74LS541NS-E20	4-58
SN74LS628NS	4-65
SN74LS628NS-E20	4-65
SN74LS684NS	4-65
SN74LS74ANS-E05	4-58
SN74LVT245NS	4-62
SN74LVT245NS-E05	4-62
SSM-2142P (PMI)	4-66
TA78L09S	4-52
TC4051BFHB	4-66
TC4051BFHB-TP2	4-66
TC4053BFHB-TP2	4-43
TC4S66F	4-66
TC4S66F(TE85R)	4-66
TC4W53F	4-66
TC4W53F(TE12R)	4-66
TC5081AP	4-66
TC74ACT541FS	4-63
TC74ACT541FS-EL	4-63
TC74HC123AF	4-94
TC74HC123AF(EL)	4-94
TC74HC221AF	4-66
TC74HC221AF(EL)	4-66
TC74HC375AF(EL)	4-62
TC74HC4538AF	4-66
TC74HC4538AF(EL)	4-66
TC74HC86AF	4-64
TC74HCT174AF	4-67
TC74VHC00F	4-6
TC74VHC00F(EL)	4-6
TC74VHC04F	4-59
TC74VHC04F(EL)	4-59
TC74VHC08F(EL)	4-59
TC74VHC10F(EL)	4-59
TC74VHC11F	4-59
TC74VHC11F(EL)	4-59
TC74VHC125F	4-93
TC74VHC125F(EL)	4-93
TC74VHC138F(EL)	4-6
TC74VHC139F(EL)	4-59
TC74VHC157F	4-7
TC74VHC157F(EL)	4-7
TC74VHC161F(EL)	4-67
TC74VHC164F	4-60
TC74VHC164F(EL)	4-60
TC74VHC174F	4-61
TC74VHC174F(EL)	4-61
TC74VHC175F	4-7
TC74VHC175F(EL)	4-7
TC74VHC240F(EL)	4-61
TC74VHC244F	4-61
TC74VHC244F(EL)	4-61
TC74VHC245F(EL)	4-62
TC74VHC32F(EL)	4-62
TC74VHC374F	4-7
TC74VHC374F(EL)	4-7
TC74VHC541F	4-63
TC74VHC541F(EL)	4-63
TC74VHC574F	4-64
TC74VHC574F(EL)	4-64
TC74VHC74F(EL)	4-7
TC74VHCT244F(EL)	4-61
TC7S02F(TE85R)	4-54
TC7S32F(TE85R)	4-54
TC7SH04FU	4-94
TC7SH04FU-TE85R	4-94
TC7SH32FU-TE85R	4-94
TD62503F	4-67
TK11230AMTL	4-94
TK11233AUTB	4-94
TL062CPS	4-94
TL062CPS-E05	4-94
TL082CPS-E05	4-67
TL082M (TI)	4-67
TL431CLP	4-67
TL431CLP-Z	4-67
TL431CPS	4-67
TL431CPS-E05	4-67
TL7705CPS-B	4-68
TL7705CPS-B-E05	4-68
TLC27L2CPS	4-68
TLC27L2CPS-ELL2000	4-68
TLC2932IPW-E20	4-68
TLC5733IPM	4-68
TMP68301AFR-16	4-69
TMS418160-60DZ	4-95
UC3854N	4-70
UPC1037HA	4-70
UPC358G2-E2	4-10
UPD42101G-3	4-70
UPD4218160LE-60	4-95
UPD482445G4-60-7JG	4-71
UPD485505G-35	4-97
UPD70116C	4-71
UPD70116C-10	4-71
UPD70116GC-10-3B6	4-71
UPD71051C-10	4-72
UPD71054C-10	4-72
UPD71055GB-10-3B4	4-73
UPD71059C-10	4-73
WS59510-40J	4-74
YMF262-ME2	4-74
Z8401510FEC	4-75
Z84C4306FEC	4-76
ZA4024	4-96

DIODE

1N4148M
1N4148M-TP
1SS119-25
1SS119-25TD
ERA81-004TP3
ERA83-006

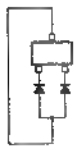

1S2835-T1
1S2836
1SS300-TE85L
1SS303
1SS303-T1

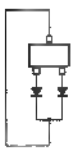

1S2837-T1
1SS184
HSM88WK-TL
MA141WK

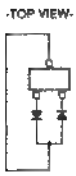

1SS123-T1
1SS226
DA204U
DA204UT106

AU02A

CL-150PG-CD-T
CL-150PG-CD
CL-150R-CD (RED)
CL-150R-CD-T

ERC62M-004

ERC80M-004

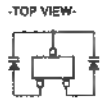

KV1460TL00
KV1470
KV1470TL00

KV1851A-1

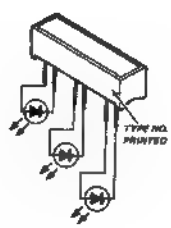

LD-701MG (GREEN)

RD10F-T7B1
RD22F-T7B2
RD2.7ES-T1B
RD33F-T7B2
RD6.2ES-B2
RD6.2ES-T1B
RD7.5ESB2
RD7.5ES-T1B

RD2.4M-B
RD2.4M-T1B
RD3.9M-B1
RD3.9M-T1B

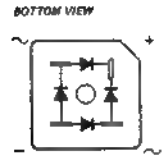

S15VB60

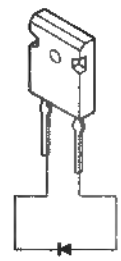

S16L60

TLR124 (RED)

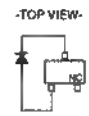

SB01-05CP
SB01-05CP-TB

TRANSISTOR

-TOP VIEW-

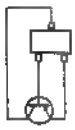

2SA1162-G
2SA1611-M5M6
2SA1611T1-M5M6
2SA812-T1-M5M6

-TOP VIEW-

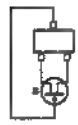

2SK508-K51
2SK508-T1K51

-TOP VIEW-

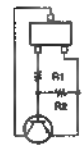

DTC114EU
DTC144EUA-T106

-TOP VIEW-

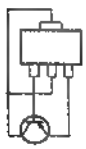

2SB1115A-T1YP
2SB1115A-YQ

-TOP VIEW-

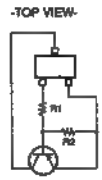

DTA124EKA-T146

-TOP VIEW-

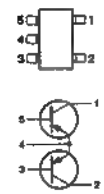

FMS1
FMS1-T-148

-TOP VIEW-

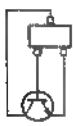

2SC1623-L5L6
2SC1623-T1-L5L6
2SC3356-K
2SC3356-T1K
2SC4177-L6
2SC4177-T1L5L6

-TOP VIEW-

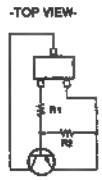

DTA144EUA-T106

-TOP VIEW-

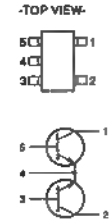

FMW1
FMW1-T-148

TYPE NO. PRINTED

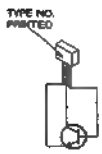

2SC1815YGR-TPE2
2SC2785-HFE
2SC2785TP-HFE

TYPE NO. PRINTED.

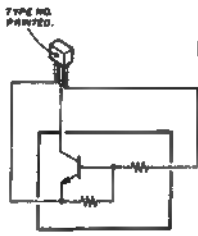

DTC114YSA-TP

-TOP VIEW-

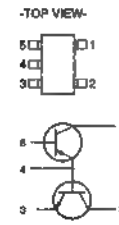

FMY3
FMY3-T-148

2SC4159-E
2SK2234

-TOP VIEW-

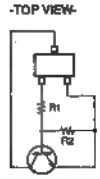

DTC124TKA-T146
DTC144EKA-T146 (R1=47 R2=47)

-TOP VIEW-

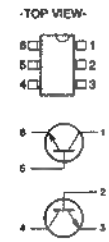

IMX1
IMX1T110

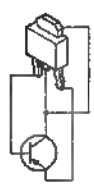

2SA1385-Z-M

MISCELLANEOUS

DS1000Z-50(TE2) (DALLAS SEMICONDUCTOR)(DELAY TIME=50nS)

C-MOS DELAY LINE
- TOP VIEW -

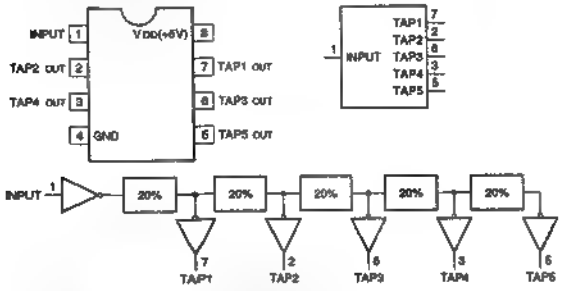

TYPE NO.	DELAY TIME (ns)				
	TAP1	TAP2	TAP3	TAP4	TAP5
DS1000M-50	10	20	30	40	50
DS1000M-60	12	24	36	48	60
DS1000M-75	15	30	45	60	75
DS1000M-100	20	40	60	80	100
DS1000M-125	25	50	75	100	125
DS1000M-150	30	60	90	120	150
DS1000M-175	35	70	105	140	175
DS1000M-200	40	80	120	160	200
DS1000M-250	50	100	150	200	250
DS1000M-500	100	200	300	400	500
DS1000Z-100	20	40	60	80	100

PC817Y2
TLP521-1-A

—TOP VIEW—

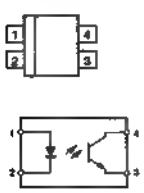

IC

74AC00SJ (NS)FLAT PACKAGE
74AC00SJX
SN74HC00AN (TI)
SN74HC00ANS (TI)FLAT PACKAGE
SN74HC00ANS-E05
TC74VHC00F (TOSHIBA)FLAT PACKAGE
TC74VHC00F(EL)

C-MOS QUAD 2-INPUT NAND GATES
—TOP VIEW—

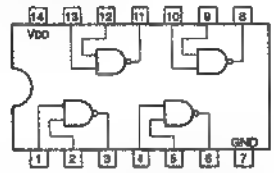

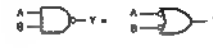

$Y = \overline{A \cdot B} = \overline{A} + \overline{B}$

A	B	Y
0	0	1
0	1	1
1	0	1
1	1	0

0 ; LOW LEVEL
1 ; HIGH LEVEL

NOTE:

TYPE	VDD
TC74AC00 TYPE TC74VHC00	+2 to +5.5V
MC74HCT00N	+5V
74ACT00 TYPE	+4.5 to +5.5V
OTHER TYPES	+2 to +6V

74AC138SJ (NS)FLAT PACKAGE
74AC138SJX
SN74HC138ANS (TI)FLAT PACKAGE
SN74HC138ANS-E05
TC74VHC138F(EL) (TOSHIBA)

C-MOS 3-TO-8 LINE DECODER / DEMULTIPLEXER
—TOP VIEW—

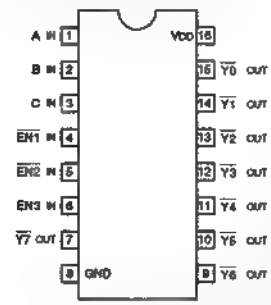

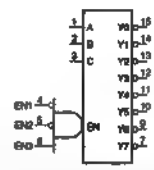

INPUTS				OUTPUTS							
EN	C	B	A	Y7	Y6	Y5	Y4	Y3	Y2	Y1	Y0
0	X	X	X	1	1	1	1	1	1	1	1
1	0	0	0	1	1	1	1	1	1	1	0
1	0	0	1	1	1	1	1	1	1	0	1
1	0	1	0	1	1	1	1	1	0	1	1
1	0	1	1	1	1	1	1	0	1	1	1
1	1	0	0	1	1	1	0	1	1	1	1
1	1	0	1	1	1	0	1	1	1	1	1
1	1	1	0	1	0	1	1	1	1	1	1
1	1	1	1	0	1	1	1	1	1	1	1

$EN = \overline{EN1} \cdot \overline{EN2} \cdot EN3$

0 ; LOW LEVEL
1 ; HIGH LEVEL
X ; DON'T CARE

NOTE:

TYPE	VDD
74HCT138 TYPE	+5V
74ACT138 TYPE	+4.5 to +5.5V
TC74AC138 TYPE TC74VHC138	+2 to +5.5V
OTHER TYPES	+2 to +6V

74AC157SJX (NS)FLAT PACKAGE
SN74HC157ANS (TI)FLAT PACKAGE
SN74HC157ANS-E05
TC74VHC157F (TOSHIBA)FLAT PACKAGE
TC74VHC157F(EL)

C-MOS QUAD 2-LINE-TO-1-LINE DATA SELECTOR/ MULTIPLEXER
—TOP VIEW—

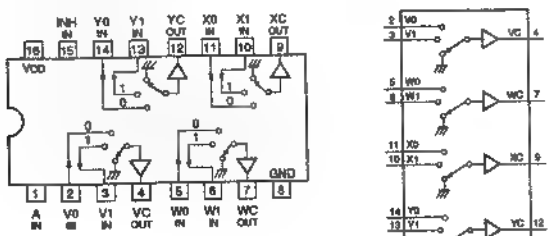

NOTE:

TYPE	VDD
74ACT/74FCT	+5V
TC74AC157P TC74AC157	+2 to +5.5V
TC40H	+2 to +8V
OTHER TYPES	+2 to +6V

CONT.IN		ON CHANNEL
INH	A	
0	0	0
0	1	1
1	X	GND

0 ; LOW LEVEL
1 ; HIGH LEVEL
X ; DON'T CARE

74AC374SJ (NS)FLAT PACKAGE
74AC374SJX
SN74HC374ANS (TI)FLAT PACKAGE
SN74HC374ANS-E05
SN74HCT374ANS-E05 (TI)FLAT PACKAGE
TC74VHC374F (TOSHIBA)FLAT PACKAGE
TC74VHC374F(EL)

C-MOS 3-STATE OCTAL D-TYPE FLIP-FLOP
-TOP VIEW-

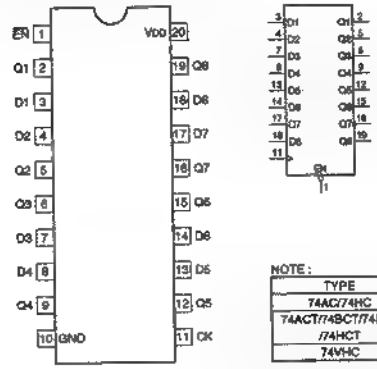

INPUTS			OUT
EN	D	CK	
0	1	↑	1
0	0	↑	0
0	X	0	Q0
1	X	X	HI-Z

0 ; LOW LEVEL
1 ; HIGH LEVEL
X ; DON'T CARE
HI-Z ; HIGH IMPEDANCE

NOTE:

TYPE	VDD
74AC/74HC	+2 to +6V
74ACT/74BCT/74FCT /74HCT	+5V
74VHC	+2 to +5.5V

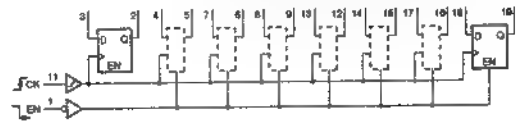

74AC175SJ (NS)FLAT PACKAGE
74AC175SJX
SN74HC175ANS (TI)FLAT PACKAGE
SN74HC175ANS-E05
TC74VHC175F (TOSHIBA)FLAT PACKAGE
TC74VHC175F(EL)

C-MOS QUAD D-TYPE FLIP-FLOPS WITH RESET
-TOP VIEW-

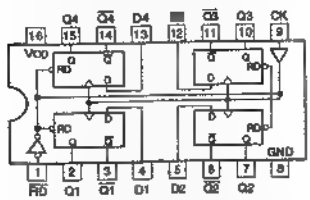

RD	CK	D	Q	$\overline{Q}$
0	X	X	0	1
1	↑	1	1	0
1	↑	0	0	1
1	0	X	Q0	$\overline{Q0}$

0 ; LOW LEVEL
↑ ; HIGH LEVEL
X ; DON'T CARE
Q0 ; NO CHANGE
$\overline{Q0}$; NO CHANGE

NOTE:

TYPE	VDD
AC TYPE	+2V to +5.5V
74ACT175 TYPE	+4.5V to 5.5V
OTHER TYPES	+2V to 6V

74AC74SJ (NS)FLAT PACKAGE
74AC74SJX
SN74HC74ANS (TI)FLAT PACKAGE
SN74HC74ANS-E05
SN74HCT74ANS-E05 (TI)FLAT PACKAGE
TC74VHC74F(EL) (TOSHIBA)

C-MOS DUAL D-TYPE FLIP-FLOPS WITH DIRECT SET/RESET
—TOP VIEW—

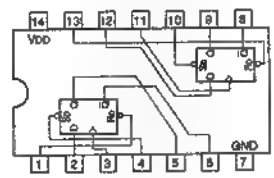

INPUTS				OUTPUTS	
$\overline{SD}$	$\overline{RD}$	CK	D	Qn+1	$\overline{Qn+1}$
0	1	X	X	1	0
1	0	X	X	0	1
0	0	X	X	1	1
1	1	↑	1	1	0
1	1	↑	0	0	1
1	1	0	X	Qn	$\overline{Qn}$

0 ; LOW LEVEL
1 ; HIGH LEVEL
X ; DON'T CARE

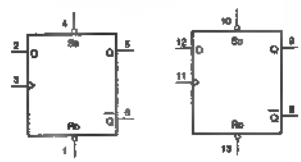

NOTE:

TYPE	VDD
HCT/ACT	+5V
TC74AC/VHC	+2 to +5.5V
OTHERS	+2 to +6V

74ACT399SJX (NS)

C-MOS QUAD 2-PORT REGISTER

-TOP VIEW-

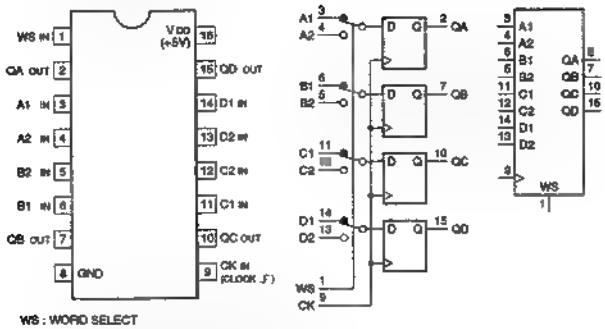

WS : WORD SELECT

INPUTS		OUTPUTS			
WS	CK	QA	QB	QC	QD
0	↑	A1	B1	C1	D1
1	↑	A2	B2	C2	D2
X	0	QA0	QB0	QC0	QD0

1 ; HIGH LEVEL
0 ; LOW LEVEL
X ; DONT CARE

74F283SJ (NS)FLAT PACKAGE
74F283SJ-T5R

TTL 4-BIT BINARY FULL ADDER

-TOP VIEW-

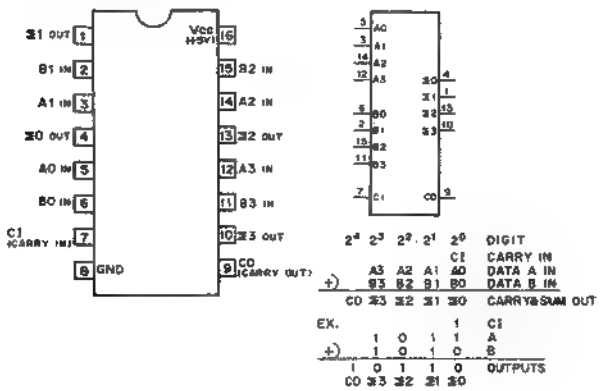

74F521SJ (NS)
74F521SJ-T5R

TTL 8-BIT IDENTITY COMPARATOR

-TOP VIEW-

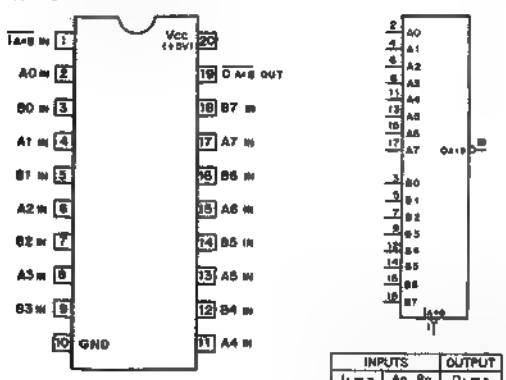

INPUTS		OUTPUT
$A_n = B_n$	An, Bn	$O_{A=B}$
0	An = Bn	0
0	An ≠ Bn	1
1	An = Bn	1
1	An ≠ Bn	1

0 : LOW LEVEL
1 : HIGH LEVEL

A80502-66100 (INTEL)

C-MOS 32-BIT CPU WITH 64-BIT DATA BUS

-BOTTOM VIEW-

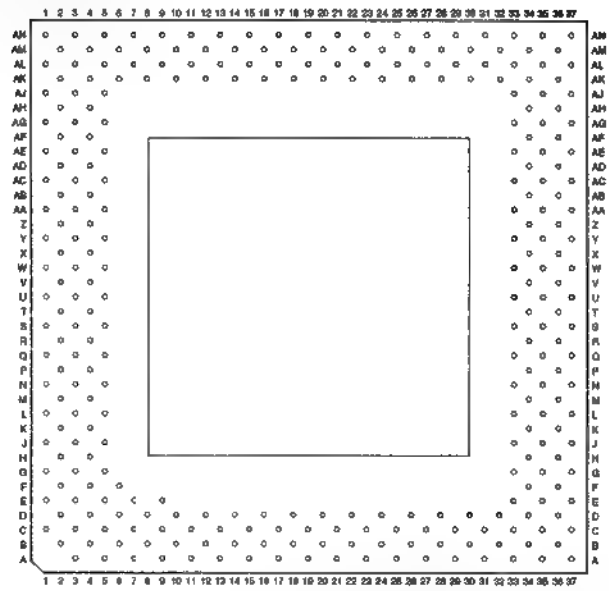

(VDD = +3.3V)

PIN NO.	I/O	SIGNAL	PIN NO.	I/O	SIGNAL	PIN NO.	I/O	SIGNAL	PIN NO.	I/O	SIGNAL	PIN NO.	I/O	SIGNAL
1C	—	INC	4M	I/O	D62	12D	I/O	D37	27C	I/O	D24	35A	I/O	D15
1E	I/O	D54	4P	O	IERR	12AK	I/O	BE3	27AL	I/O	A14	35C	I/O	D10
■	—	VDD	4R	O	PM1/BP1	12AM	—	GND	27AN	—	VDD	35E	I/O	D6
1J	—	VDD	4T	O	M/IO	13A	—	VDD	28B	—	GND	35G	I/O	D1
1L	—	VDD	4V	I	AHOLD	13C	I/O	D34	28D	I/O	D19	35J	I/O	D2
1N	—	VDD	4X	I	BRDY	13AL	I/O	BE4	28AK	I/O	A13	35L	I/O	PICD1
1Q	—	VDD	4Z	I	BOFF	13AN	—	VDD	28AM	—	GND	35N	I	TDI
1S	—	VDD	4AB	I	HOLD	14B	—	GND	29A	—	VDD	35Q	I	CPUTYP
1U	—	VDD	4AD	I/O	PBGNT	14D	I/O	D35	29C	I/O	D21	35S	—	NC
1W	—	VDD	4AF	O	PCHK	14AK	O	BE5	29AL	I/O	A12	35U	—	GND
1Y	—	VDD	4AH	O	LOCK	14AM	—	GND	29AN	—	VDD	35W	—	NC
1AA	—	VDD	4AK	O	D/C	15A	—	VDD	30B	I/O	D20	35Y	I	FRCMC
1AC	—	VDD	4AM	I	EADS	15C	I/O	D32	30D	I/O	DP1	36AA	I	IGNNE
1AE	—	VDD	5A	I/O	D41	15AL	■	BE6	30AK	I/O	A9	35AC	I	R/S
1AG	—	VDD	5C	I/O	D45	15AN	—	VDD	30AM	—	GND	35AE	O	DP
1AJ	O	BREQ	5E	I/O	D49	16B	—	GND	31A	I/O	D22	35AG	I/O	A24
1AL	—	INC	5G	I/O	D53	16D	I/O	D33	31C	I/O	D17	35AJ	I/O	A25
1AN	—	INC	5J	I/O	D58	16AK	O	BE7	31AL	I/O	A11	35AL	I/O	A3
2B	—	INC	5L	I/O	D60	16AM	—	GND	31AN	I/O	A10	35AN	—	NC
2D	I/O	D50	5N	I/O	DP7	17A	—	VDD	32B	I/O	D16	36B	I/O	D11
2F	I/O	DP6	5Q	O	FERR	17C	I/O	D31	32D	I/O	D12	36D	I/O	DP0
2H	—	GND	5S	O	BP3	17AL	O	SCYC	32AK	I/O	A5	36F	I/O	D4
2K	—	GND	5U	I	INV	17AN	—	VDD	32AM	I/O	A8	36H	—	GND
2M	—	GND	5W	I	KEN	18B	—	GND	33A	I/O	D18	36K	—	GND
2P	—	GND	5Y	I	NA	18D	I/O	DP3	33C	I/O	D14	36M	—	GND
2R	—	GND	5AA	I	WB/WT	18AK	I	CLK	33E	I/O	D7	36P	—	GND
2T	—	GND	5AC	O	PRDY	18AM	—	GND	33G	I/O	D3	36R	—	GND
2V	—	GND	5AE	O	APCHK	19A	—	VDD	33J	I/O	PICD0	36T	—	GND
2X	—	GND	5AG	O	PCD	19C	I/O	D29	33L	—	VDD	36V	—	GND
2Z	—	GND	5AJ	O	ADS	19AL	—	NC	33N	O	TDO	36X	—	GND
2AB	—	GND	5AL	O	HITM	19AN	—	VDD	33Q	I	TRST	36Z	—	GND
2AD	—	GND	5AN	—	INC	20B	—	GND	33S	—	NC	36AB	—	GND
2AF	—	GND	6B	—	GND	20D	I/O	D30	33U	—	VDD	36AD	—	GND
2AH	—	GND	6D	I/O	D44	20AK	I	RESET	33W	—	NC	36AF	—	GND
2AK	I/O	AP	6F	I/O	DP5	20AM	—	GND	33Y	I	BF0	36AH	I/O	A22
2AM	O	ADSC	6AK	O	HIT	21A	—	VDD	33AA	I	INIT	36AK	I/O	A29
3A	—	INC	6AM	O	WR	21C	I/O	D27	33AC	I	NMI/LINT1	36AM	I/O	A30
3C	I/O	D47	7A	—	VDD	21AL	I/O	A20	33AE	I/O	A23	37A	—	NC
3E	I/O	D52	7C	I/O	DP4	21AN	—	VDD	33AG	I/O	A27	37C	I/O	D8
3G	I/O	D55	7E	I/O	D46	22B	—	GND	33AJ	I/O	A31	37E	—	VDD
3J	I/O	D57	7AL	I	BUSCHK	22D	I/O	D28	33AL	I/O	A7	37G	—	VDD
3L	I/O	D61	7AN	I	FLUSH	22AK	I/O	A19	33AN	I/O	A6	37J	—	VDD
3N	I/O	D63	8B	—	GND	22AM	—	GND	34B	I/O	D13	37L	—	VDD
3Q	O	PM0/BP0	8D	I/O	D40	23A	—	VDD	34D	I/O	D9	37N	—	VDD
3S	O	BP2	8AK	I	A20M	23C	I/O	D25	34F	I/O	D5	37Q	—	VDD
3U	O	CACHE	8AM	—	GND	23AL	I/O	A18	34H	I	PICCLK	37S	—	VDD
3W	I	EWBE	9A	—	VDD	23AN	—	VDD	34K	I/O	D0	37U	—	VDD
3Y	I	BRDYC	9C	I/O	D38	24B	—	GND	34M	I	TCK	37W	—	VDD
3AA	I/O	PHIT	9E	I/O	D42	24D	I/O	D26	34P	I	TMS	37Y	—	VDD
3AC	I/O	PHITM	9AL	I/O	BE0	24AK	I/O	A17	34R	—	NC	37AA	—	VDD
3AE	I/O	PBREQ	9AN	—	VDD	24AM	—	GND	34T	—	VDD	37AC	—	VDD
3AG	O	SMIACT	10B	—	GND	25A	—	VDD	34V	I	STPCLK	37AE	—	VDD
3AJ	O	HLDA	10D	I/O	D39	25C	I/O	DP2	34X	I	BF	37AG	—	VDD
3AL	O	PWT	10AK	I/O	BE1	25AL	I/O	A16	34Z	I	PEN	37AJ	—	GND
3AN	—	INC	10AM	—	GND	25AN	—	VDD	34AB	I	SMI	37AL	—	GND
4B	I/O	D43	11A	—	VDD	26B	—	GND	34AD	I	INTR/LINT0	37AN	—	GND
4D	I/O	D48	11C	I/O	D36	26D	I/O	D23	34AF	I/O	A21			
4F	I/O	D51	11AL	I/O	BE2	26AK	I/O	A15	34AH	I/O	A26			
4H	I/O	D56	11AN	—	VDD	26AM	—	GND	34AK	I/O	A28			
4K	I/O	D59	12B	—	GND	27A	—	VDD	34AM	I/O	A4			

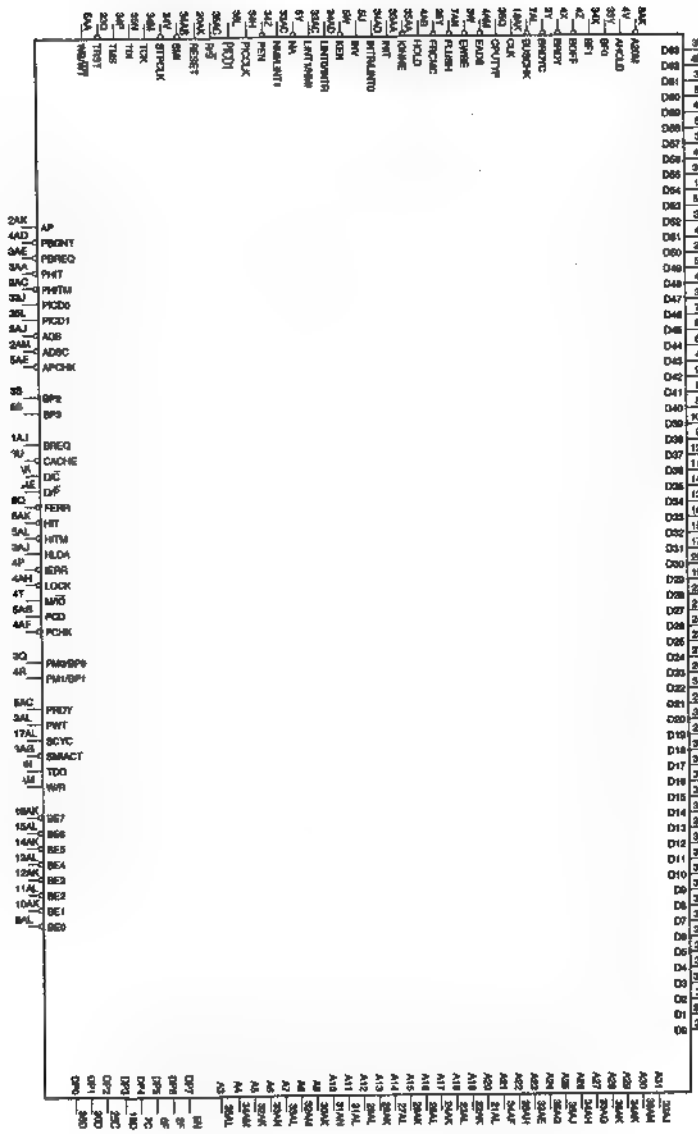

INPUT

A20M	; ADDRESS BIT 20 MASK
AHOLD	; ADDRESS HOLD
BF0, BF1	; BUS FREQUENCY
BOFF	; BACKOFF
BRDY	; BURST READY
BRDYC	; THIS SIGNAL HAS THE SAME FUNCTIONALITY AS BRDY
BUSCHK	; BUS CHECK
CLK	; CLOCK
CPUTYP	; CPU TYPE
EADS	; EXTERNAL ADDRESS
EWBE	; EXTERNAL WRITE BUFFER EMPTY
FLUSH	; CACHE FLUSH
FRCMC	; FUNCTIONAL REDUNDANCY CHECKING MASTER/CHECKER
HOLD	; BUS HOLD REQUEST
IGNNE	; IGNORE NUMERIC ERROR
INIT	; INITIALIZATION
INTR/LINT0	; MASKABLE INTERRUPT
INV	; INVALIDATION
KEN	; CACHE ENABLE
LINT0/INTR	; LOCAL INTERRUPT 0/INTERRUPT
LINT1/NMI	; LOCAL INTERRUPT 1/NON-MASKABLE INTERRUPT
NA	; NEXT ADDRESS
NMI/LINT1	; NON-MASKABLE INTERRUPT/LOCAL INTERRUPT 1
PEN	; PARITY ENABLE
PICCLK	; PROGRAMMABLE INTERRUPT CONTROLLER CLOCK
PICD1	; PROGRAMMABLE INTERRUPT CONTROLLER DATA
R/S	; RUN/STOP
RESET	; RESET
SMI	; SYSTEM MANAGEMENT INTERRUPT
STPCLK	; STOP CLOCK
TCK	; TESTABILITY CLOCK
TDI	; TEST DATA
TMS	; TEST MODE SELECT
TRST	; TEST RESET
WB/WT	; WRITE BACK/WRITE THROUGH

INPUT/OUTPUT

A3-A31	; ADDRESS
AP	; ADDRESS PARITY
BE0-BE7	; BYTE ENABLE
D0-D63	; DATA LINES
DP0-DP7	; DATA PARITY
PBGNT	; PRIVATE BUS GRANT
PBREQ	; PRIVATE BUS REQUEST
PHIT	; PRIVATE HIT
PHITM	; PRIVATE MODIFIED HIT
PICD0, PICD1	; PROGRAMMABLE CONTROLLER DATA LINES

OUTPUT

ADS	; ADDRESS STATUS
ADSC	; ADSC IS FUNCTIONALLY IDENTICAL TO ADS
APCHK	; ADDRESS PARITY CHECK
BE0-BE7	; BYTE ENABLE
BP2, BP3	; BREAKPOINT
BREQ	; BUS REQUEST
CACHE	; CACHE
D/C	; DATA/CODE
D/P	; DUAL/PRIMARY
FERR	; FLOATING POINT ERROR
HIT	; HIT
HITM	; HIT TO A MODIFIED LINE
HLDA	; BUS HOLD ACKNOWLEDGE
IERR	; INTERNAL ERROR
LOCK	; BUS LOCK
M/IO	; MEMORY/INPUT-OUTPUT
PCD	; PAGE CACHE DISABLE
PCHK	; PARITY CHECK
PM0/BP0, PM1/BP1	; PERFORMANCE MONITORING/BREAKPOINT
PRDY	; PROBE READY
PWT	; PAGE WRITE THROUGH
SCYC	; SPLIT CYCLE
SMIACT	; SYSTEM MANAGEMENT INTERRUPT ACTIVE
TDO	; TEST DATA
W/R	; WRITE/READ

AK5326-VP (ASAHI KASEI)

C-MOS 16-BIT A/D CONVERTER
-TOP VIEW-

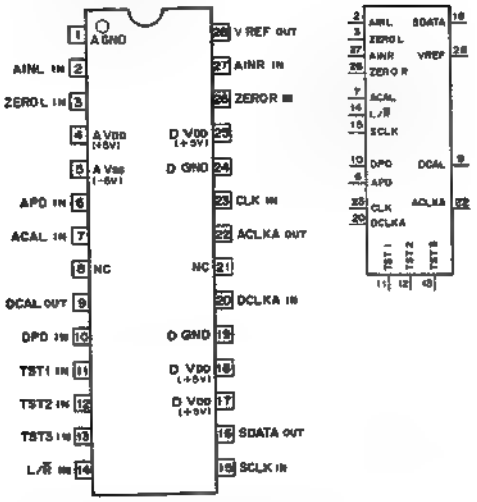

ACAL : ANALOG CALIBRATION INPUT
ACLKA : ANALOG SYSTEM CLOCK OUTPUT
AINL,R : L,R CHANNEL ANALOG INPUTS
APD : ANALOG POWER DOWN INPUT
CLK : MASTER CLOCK INPUT
DCAL : DIGITAL CALIBRATION OUTPUT
DCLKA : DIGITAL SYSTEM CLOCK INPUT
DPD : DIGITAL POWER DOWN INPUT
L/R : CHANNEL SELECT INPUT
SCLK : SERIAL DATA OUTPUT CLOCK INPUT
SDATA : SERIAL DATA OUTPUT
TST1,2,3 : TEST INPUTS
VREF : REFERENCE VOLTAGE OUTPUT (~3.6V)
ZEROL,R : L,R CHANNEL ZERO LEVEL INPUTS

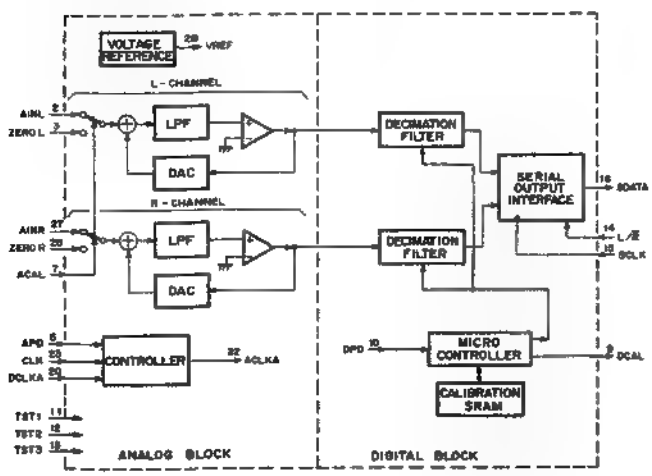

AM26LS31CNS (TI)FLAT PACKAGE
AM26LS31CNS-E05

HIGH SPEED DIFFERENTIAL LINE DRIVER
-TOP VIEW-

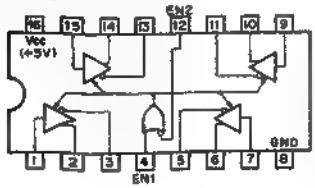

FUNCTION TABLE		
EN2	EN1	OUTPUT
0	0	ENABLE
0	1	ENABLE
1	0	HI-Z
1	1	ENABLE

0 ; LOW LEVEL
1 ; HIGH LEVEL
HI-Z ; HIGH IMPEDANCE

AM26LS32ACNS (TI)FLAT PACKAGE
AM26LS32ACNS-E05

HIGH SPEED DIFFERENTIAL LINE RECEIVER
—TOP VIEW—

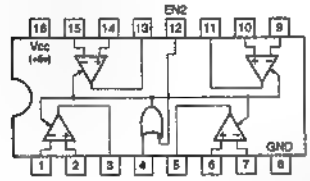

FUNCTION TABLE		
EN2	EN1	OUTPUT
0	0	ENABLE
0	1	ENABLE
1	0	HI-Z
1	1	ENABLE

0 ; LOW LEVEL
1 ; HIGH LEVEL
HI-Z ; HIGH IMPEDANCE

	SENSE	INPUT VOLT
C32/LS32	±200mV	±7V
LS33	±500mV	±15V

BA10358F-E2 (NS)
LM358PS (TI)FLAT PACKAGE
LM358PS-E20
UPC358G2-E2

DUAL OPERATIONAL AMPLIFIERS
—TOP VIEW—

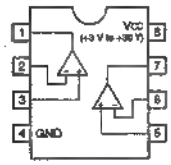

BA7046F (ROHM)FLAT PACKAGE
BA7046F-E2

VIDEO SIGNAL SYNC SEPARATOR , AFC
—TOP VIEW—

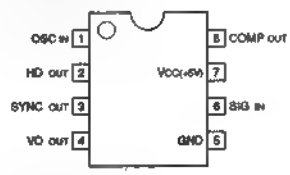

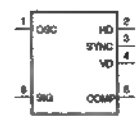

COMP ; COMPARATOR OUT
HD ; HD OUT
OSC ; OSC CONTROL IN
SIG ; VIDEO IN
SYNC ; COMP SYNC OUT
VD ; VD OUT

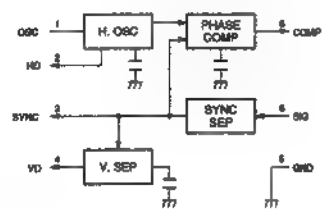

CX22017 (SONY)
CX22017-TH

VIDEO SIGNAL PROCESSOR

-TOP VIEW-

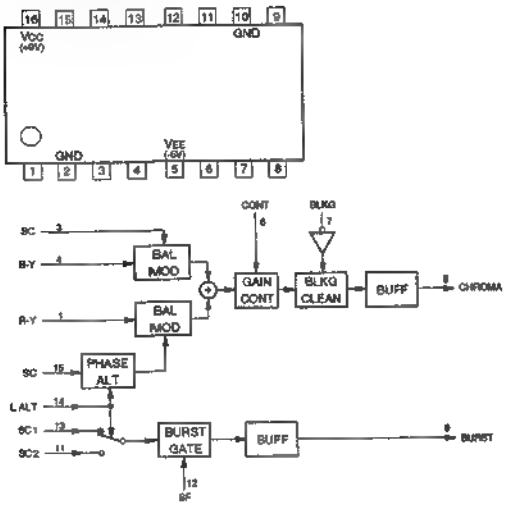

CXA1432M (SONY)FLAT PACKAGE
CXA1432M-T4

VIDEO SIGNAL CLAMPER

— TOP VIEW —

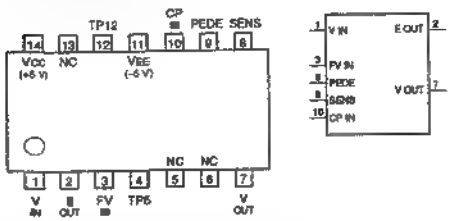

CP IN	; CLAMP PULSE INPUT
E OUT	; BUFFER AMP OUTPUT
FV IN	; FLOATING VIDEO SIGNAL INPUT
PEDE	; CLAMP LEVEL DC INPUT
SENS	; CLAMP POINT SIGNAL INPUT
TP5, TP12	; FOR TEST
V IN	; VIDEO SIGNAL INPUT
V OUT	; VIDEO SIGNAL OUTPUT

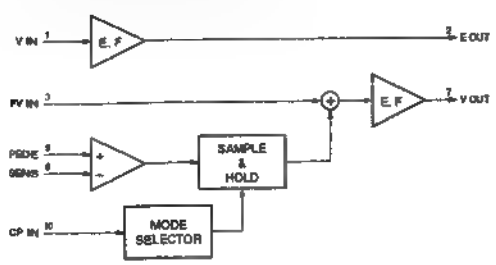

CXA1260Q-TH-Z
CXA1260Q-Z (SONY)FLAT PACKAGE

8-BIT 35MHz 3-CHANNEL D/A CONVERTER

-TOP VIEW-

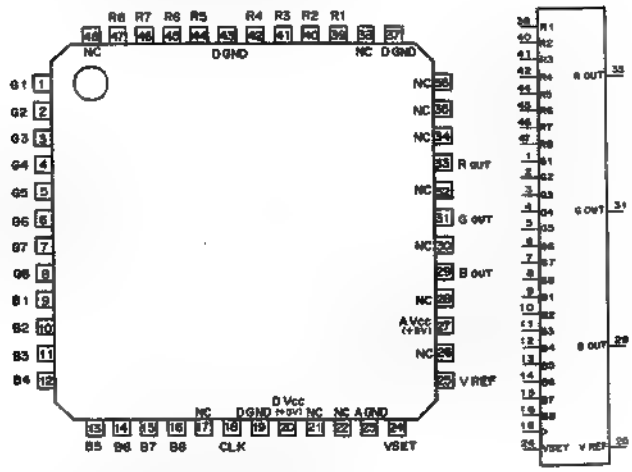


```
B1-B8 ; B CHANNEL DIGITAL INPUTS (LSB TO MSB)
B OUT ; B CHANNEL ANALOG OUTPUT
  CLK ; D/A CONVERSION CLOCK
G1-G8 ; G CHANNEL DIGITAL INPUTS (LSB TO MSB)
G OUT ; G CHANNEL ANALOG OUTPUT
R1-R8 ; R CHANNEL DIGITAL INPUTS (LSB TO MSB)
R OUT ; R CHANNEL ANALOG OUTPUT
 VREF ; REFERENCE VOLTAGE OUTPUT, +1.2V TYP.
 VSET ; BIAS INPUT (VSET = +0.87V ; D/A OUT = 1Vp-p)
```

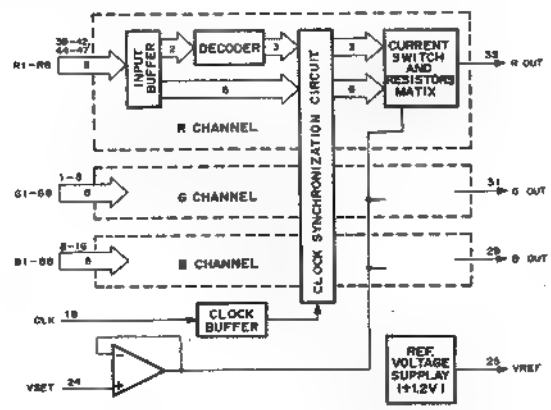

CXD1175AM-TH (SONY)

C-MOS 8-BIT 20MSPS VIDEO A/D CONVERTER

-TOP VIEW-

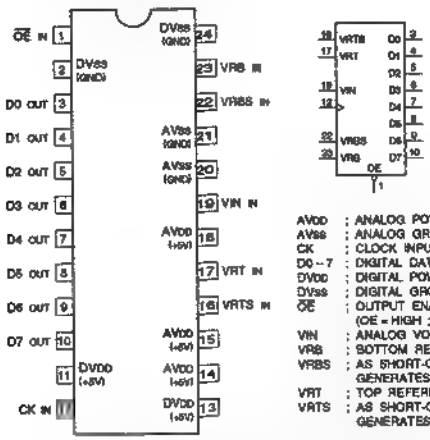

AVDD	; ANALOG POWER SUPPLY
AVss	; ANALOG GROUND
CK	; CLOCK INPUT
D0 ~ 7	; DIGITAL DATA OUTPUTS (LSB to MSB)
DVDD	; DIGITAL POWER SUPPLY
DVss	; DIGITAL GROUND
OE	; OUTPUT ENABLE (OE = HIGH ; HIGH IMPEDANCE)
VIN	; ANALOG VOLTAGE INPUT
VRB	; BOTTOM REFERENCE VOLTAGE INPUT
VRBS	; AS SHORT-CIRCUIT AT VRB. GENERATES +0.6V
VRT	; TOP REFERENCE VOLTAGE INPUT
VRTS	; AS SHORT-CIRCUIT AT VRT. GENERATES +2.6V

STEP	INPUT SIGNAL VOLTAGE	DATA OUTPUTS							
		D7	D6	D5	D4	D3	D2	D1	D0
0	0V (VRT)	1	1	1	1	1	1	1	1
1	0.01V	1	1	1	1	1	1	1	0
⋮	⋮	⋮	⋮	⋮	⋮	⋮	⋮	⋮	⋮
127	1.34V	1	0	0	0	0	0	0	0
128	1.35V	0	1	1	1	1	1	1	1
⋮	⋮	⋮	⋮	⋮	⋮	⋮	⋮	⋮	⋮
255	2.7V (VRB)	0	0	0	0	0	0	0	0

0 ; LOW LEVEL
1 ; HIGH LEVEL

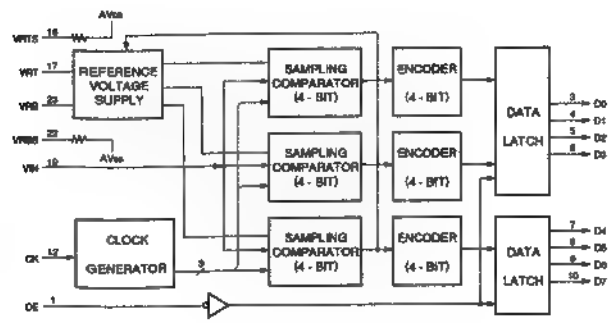

CXD1216M (SONY)FLAT PACKAGE
CXD1216M-TH

C-MOS GENLOCK DRIVER

-TOP VIEW-

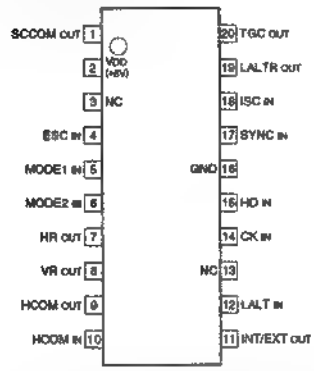

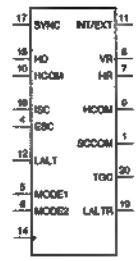

INPUT		MODE	SYSTEM
MODE1	MODE2		
0	0	M1	PAL-VBS
1	0	M2	PALM-VBS
0	1	M3	PAL,SECAM-VS/SC/LALT
1	1	M4	NTSC-VBS,NTSC-VS/SC PALM-VS/SC/LALT

0 ; LOW LEVEL
1 ; HIGH LEVEL

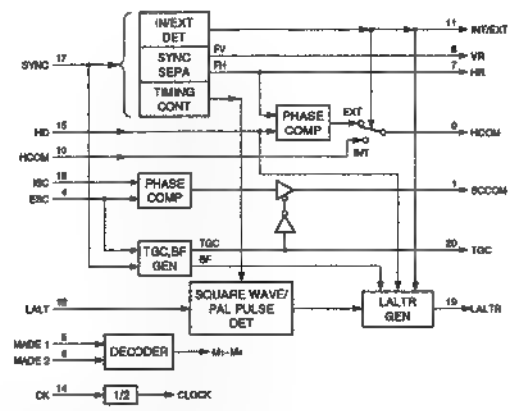

INPUT

CK	; 4fsc CLOCK INPUT
ESC	; SC/COLOR BURST
HCOM	; PHASE COMPARATE FROM CXD1217
HD	; H DRIVE FROM CXD1217
ISC	; SUBCARRIER FROM CXD1217
LALT	; LALT FROM REFERENCE SIGNAL GENERATOR
MODE1,2	; SYSTEM SELECT
SYNC	; SYNC FROM REFERENCE SIGNAL GENERATOR

OUTPUT

HCOM	; PHASE COMPARATOR HR WITH HD
HR	; fH OF SYNC SEPARATE
INT/EXT	; INTERNAL/EXTERNAL SPECIFIED
LALTR	; LINE CHANGE RESET
SCCOM	; PHASE COMPARATOR ESC WITH ISC
TGC	; TRISTATE CONTROL
VR	; fV OF SYNC SEPARATE

CXD2705AQ (SONY)FLAT PACKAGE

C-MOS DIGITAL AUDIO SIGNAL PROCESSOR

-TOP VIEW-

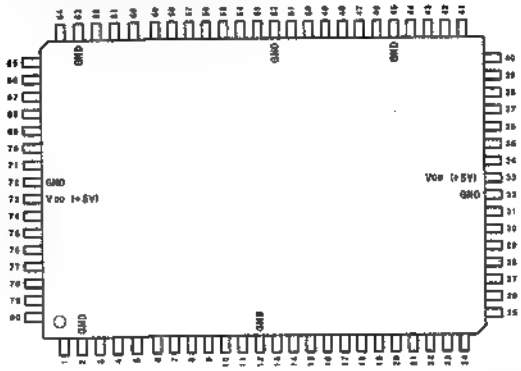

PIN NO.	I/O	SYMBOL	PIN NO.	I/O	SYMBOL	PIN NO.	I/O	SYMBOL	PIN NO.	I/O	SYMBOL
1	O	EA0	21	O	TRDT	41	I	LRK0	61	I/O	ED6
2	-	GND	22	I	RVDT	42	I	LRK1	62	I/O	ED9
3	O	EA1	23	I	SCK	43	I	BCK0	63	-	GND
4	O	EA2	24	I	XLAT	44	I	BCK1	64	I/O	ED10 (GND)
5	O	EA3	25	I	TA5	45	-	GND	65	I/O	ED11 (GND)
6	O	EA4	26	I	TA4	46	O	D2BK	66	O	XOE
7	O	EA5	27	O	SFOT	47	O	D2LR	67	■	CAS
■	■	EA6	28	O	CLKO	48	O	D4BK	68	I/O	ED12
9	O	EA7	29	I	CLK1	49	O	D4LR	■	I/O	ED13
10	■	EA8	30	I	TA3	50	I/O	EDO	70	I	TD15
11	I	TA7	31	I	TA2	51	I	TST1	71	I	TD14
12	-	GND	32	-	GND	52	-	GND	72	-	GND
13	I	TA6	33	-	VDD (+5V)	53	I	TST0	73	-	VDD (+5V)
14	I	XRST	34	I	TA1	54	I/O	ED1	74	I	TD13
15	O	SPO	35	I	TA0	55	I/O	ED2	75	I	TD12
16	O	SP1	36	O	SOC	56	I/O	ED3	76	I/O	ED14
17	O	SP2	37	O	SOB	57	I/O	ED4	77	I/O	ED15
18	■	MOVF	38	■	SOA	58	I/O	ED5	78	O	XWE
19	O	AOVF	39	O	SIB	59	I/O	ED6	79	O	RAS
20	O	REDY	40	O	SIA	60	I/O	ED7	80	O	EA9

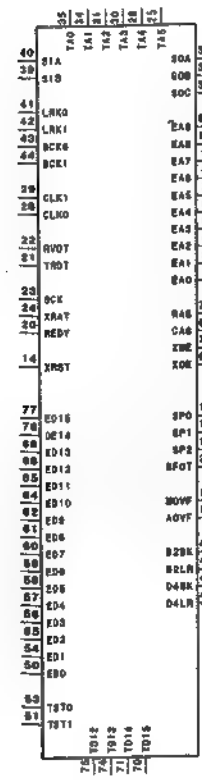

INPUT

BCK0, BCK1	;BIT CLOCK
CLK1	;CLOCK
LRK0, LRK1	;LR CLOCK
RVDT	;DATA FOR HC I/F
SCK	;SIFT CLOCK FOR HC I/F
SIA, SIB	;SERIAL DATA
TA0-TA7	;TEST
TD12-TD15	;TEST
TST0, TST1	;TEST (NORMAL "L")
XLAT	;MODE PARTITION SIGNAL
XRST	;RESET

OUTPUT

AOVF	;ALU OVERFLOW SIGNAL
SFOT	;CLOCK BUFFER
CAS	;COLUMN-ADDRESS STROBE FOR EXT. DATA RAM
CLKO	;CLOCK
D2BK	;1/2 BIT CLOCK
D2LR	;1/2 LR CLOCK
D4BK	;1/4 BIT CLOCK
D4LR	;1/4 LR CLOCK
EA0-EA9	;ADDRESS FOR EXT. DATA RAM
MOVF	;MAC OVERFLOW SIGNAL
RAS	;ROW-ADDRESS STROBE FOR EXT. DATA RAM
REDY	;READY SIGNAL FOR HC I/F
SOA-SOC	;SERIAL DATA
SP0-SP2	;STATIC PORT 0, 1, 2
TRDT	;DATA FOR HC I/F
XOE	;OUTPUT ENABLE FOR EXT. DATA RAM
XWE	;WRITE ENABLE FOR EXT. DATA RAM

INPUT/OUTPUT

ED0-ED15	;DATA INPUT/OUTPUT FOR EXT. DATA RAM

CXD8307Q (SONY)FLAT PACKAGE

DUAL 32INPUTS 32BITS MSB FIRST SERIAL ADDER

-TOP VIEW-

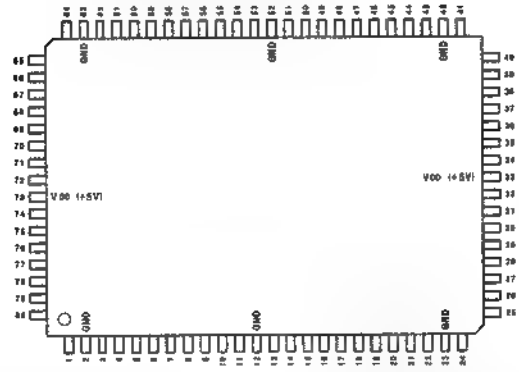

PIN NO.	I/O	SYMBOL	PIN NO.	I/O	SYMBOL	PIN NO.	I/O	SYMBOL	PIN NO.	I/O	SYMBOL
1	O	WCK	21	I	IN16A	41	I	RES	61	I	IN16B
2	-	GND	22	I	IN19A	42	-	GND	62	I	IN19B
3	I	IN1A	23	-	GND	43	I	IN1B	63	-	GND
4	I	IN2A	24	I	IN20A	44	I	IN2B	64	I	IN20B
5	I	IN3A	25	I	IN21A	45	I	IN3B	65	I	IN21B
6	I	IN4A	26	I	IN22A	46	I	IN4B	66	I	IN22B
7	I	IN5A	27	I	IN23A	47	I	IN5B	67	I	IN23B
8	I	IN6A	28	I	IN24A	48	I	IN6B	68	I	IN24B
9	I	IN7A	29	I	IN25A	49	I	IN7B	■	I	IN25B
10	I	IN8A	30	I	IN26A	50	I	IN8B	70	I	IN26B
11	I	IN9A	31	I	IN27A	51	I	IN9B	71	I	IN27B
12	-	GND	32	I	FS256	52	-	GND	72	I	TEST
13	I	IN10A	33	-	VDD (+5V)	53	I	IN10B	73	-	VDD (+5V)
14	I	IN11A	34	I	LRCK	54	I	IN11B	74	O	OVF
15	I	IN12A	35	I	IN28A	55	I	IN12B	75	I	IN28B
■	I	IN13A	36	I	IN29A	56	I	IN13B	76	I	IN29B
17	I	IN14A	37	I	IN30A	57	I	IN14B	77	I	IN30B
18	I	IN15A	38	I	IN31A	58	I	IN15B	78	I	IN31B
19	I	IN16A	39	I	IN32A	59	I	IN16B	79	I	IN32B
20	I	IN17A	40	■	OUTA	60	I	IN17B	80	O	OUTB

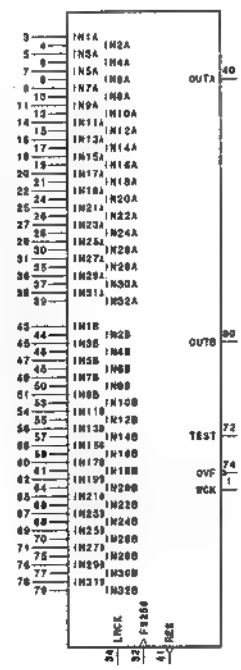

INPUT

FS256	;MASTER CLOCK (256FS)
IN1A-IN32A	;A CH DATA INPUTS (1 TO 32)
IN1B-IN32B	;B CH DATA INPUTS (1 TO 32)
LRCK	;PHASE REGULATION SIGNAL
TEST	;TEST
$\overline{RES}$	;RESET

OUTPUT

OUTA	;A CH SERIAL ADDER DATA
OUTB	;B CH SERIAL ADDER DATA
WCK	;SIFT CLOCK FOR $\overline{OVF}$
$\overline{OVF}$	;OVERFLOW MONITOR (NEGATIVE PULSE)

CXD1217M (SONY)FLAT PACKAGE
CXD1217M-TH

C-MOS SYNC GENERATOR

-TOP VIEW-

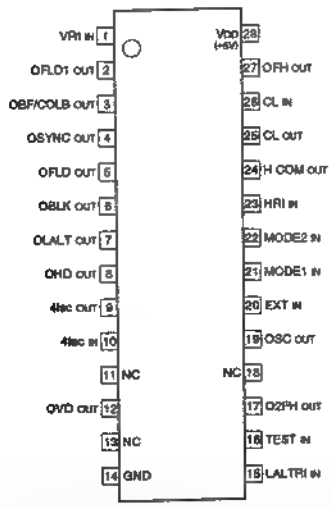

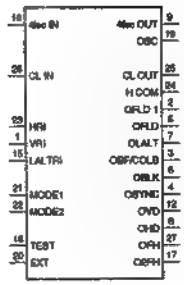

SYSTEM	4fsc	CLOCK
NTSC	910fH	910fH
PAL	1135fH+25Hz	909fH
PALM	909fH	910fH
SECAM	—	909fH

INPUT		SYSTEM
MODE1	MODE2	
0	0	NTSC
0	1	SECAM
1	0	PALM
1	1	PAL

0 ; LOW LEVEL
1 ; HIGH LEVEL

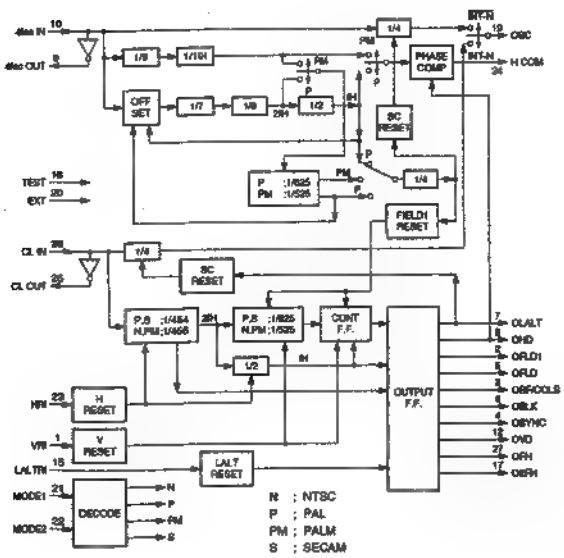

INPUT

4fSC IN	; 4fSC INPUT
CL IN	; CLOCK INPUT
EXT	; SYNC MODE SELECT (L ; INTERNAL/H ; EXTERNAL)
HRI	; H RESET
LALTRI	; LINE CHANGE RESET
MODE 1,2	; SYSTEM SELECT
VRI	; V RESET

OUTPUT

4fSC OUT	; 4fSC OUTPUT
CL OUT	; CLOCK OUTPUT
H COM	; PHASE COMPARATOR
O2H	; 2fH OUTPUT
OBF/COLB	; BURST FLAG/COLOR BLANKING
OBLK	; COMPOSITE BLANKING
OFH	; H FREQUENCE
OFLD	; EVEN,ODD
OFLD1	; FIELD1
OHD	; H DRIVE
OLALT	; LINE CHANGE
OSC	; SUB CARRIER
OSYNC	; COMPOSITE SYNC
OVD	; V DRIVE

(NTSC,PALM)

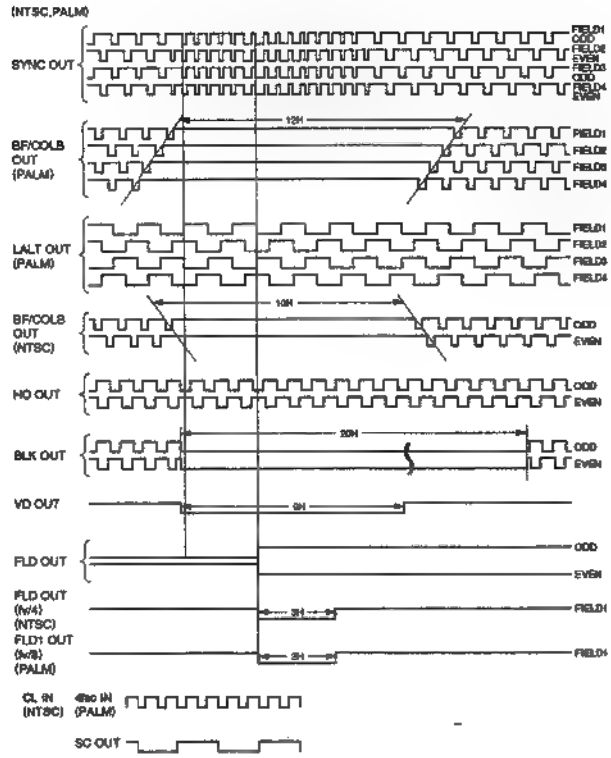

(PAL,SECAM)

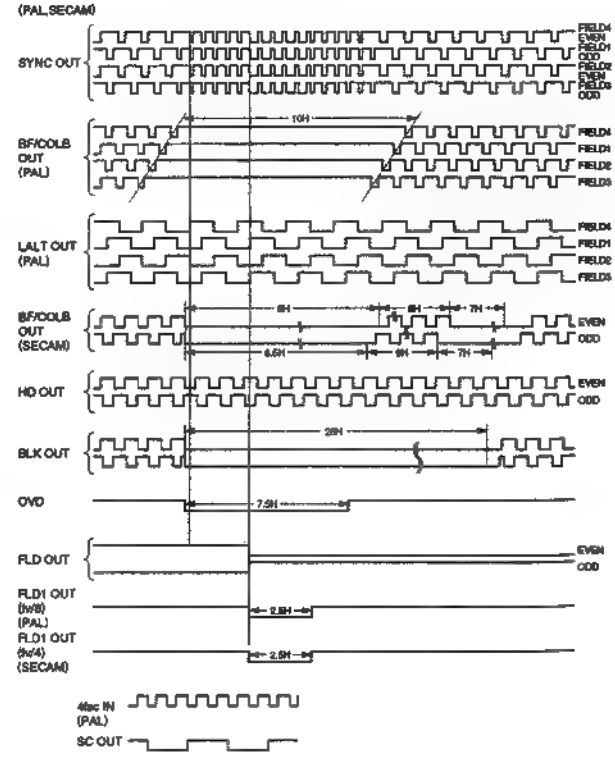

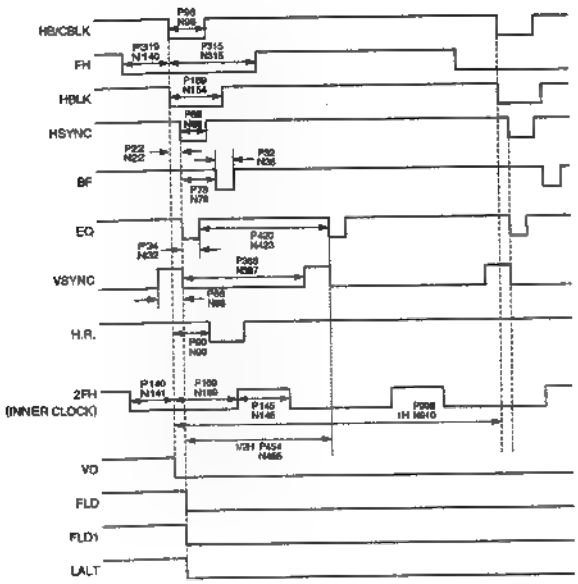

CXD8033Q (SONY)

C-MOS GATE ARRAY

-TOP VIEW-

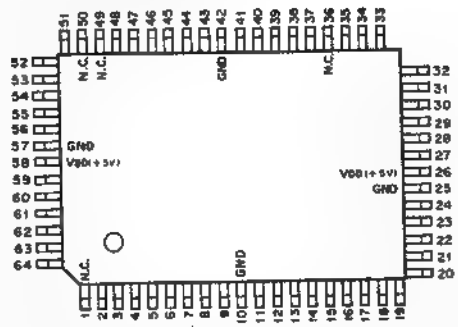

PIN NO.	I/O	SYMBOL	PIN NO.	I/O	SYMBOL	PIN NO.	I/O	SYMBOL
1	–	N.C.	23	I	A03	45	O	Y09
2	O	X05	24	I	XCK	46	O	Y08
3	O	X04	25	–	GND	47	O	Y07
4	O	X03	26	–	VDD(+5V)	48	O	Y06
5	O	X02	27	I	LDS	49	–	N.C.
6	O	X01	28	I	UDS	50	–	N.C.
7	O	X00	29	I	WE0	51	O	Y05
8	I	D00	30	I	WE1	52	O	Y04
9	I	D01	31	O	AR0	53	O	Y03
10	–	GND	32	O	AR1	54	O	Y02
11	I	D02	33	O	LN0	55	O	Y01
12	I	D03	34	O	LN1	56	O	Y00
13	I	D04	35	O	WKEY	57	–	GND
14	I	D05	36	–	N.C.	58	–	VDD(+5V)
15	I	D06	37	I	XLD	59	O	X11
16	I	D07	38	I	YLD	60	O	X10
17	I	D08	39	I	YMD	61	O	X09
18	I	D09	40	I	YCK	62	O	X08
19	I	D10	41	I	TEST	63	O	X07
20	I	D11	42	–	GND	64	O	X06
21	I	A01	43	O	Y11			
22	I	A02	44	O	Y10			

CXA1451M (SONY)
CXA1451M-TH

WIDEBAND VIDEO SWITCH

-TOP VIEW-

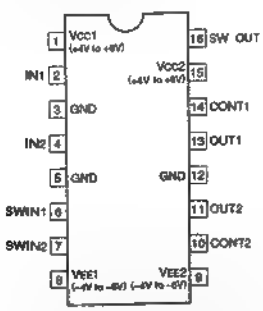

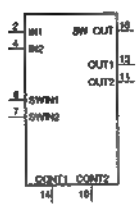

INPUT
CONT1, 2 ; POWER SAVE CONTROL PIN OF DRV.1 AND DRV.2
INT1, 2 ; 1 / 2-CHANNEL INPUT PIN
SWIN1, 2 ; IN1 / IN2 PINS SWITCH CONTROL PIN

OUTPUT
OUT1, 2 ; OUTPUT PIN OF DRV.1 / 2
SWOUT ; OUTPUTS IN1 PIN OR IN2 PIN WHICH HAS BEEN SELECTED BY SWITCH.

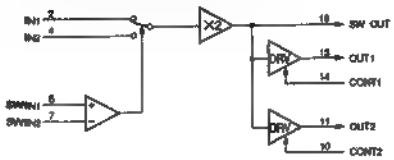

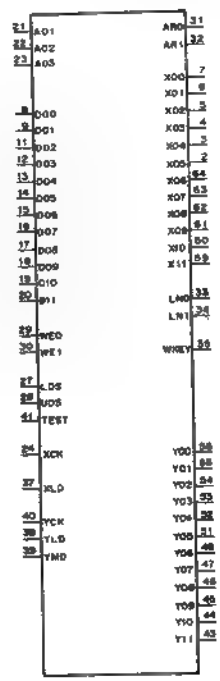

A01 – A03 ; ADDRESS 01 – 03
AR0, 1 ; VALID AREA 0, 1
D00 – D11 ; DATA INPUT 00 – 11
LDS ; LOWER DATA STROBE
LN0, 1 ; VALID LINE 0, 1
UDS ; UPPER DATA STROBE
TEST ; TEST PIN
WE0, 1 ; WRITE ENABLE 0, 1
X00 – X11 ; X CONVERTER OUTPUT
XCK ; X CLOCK
WKEY ; WIPE KEY
XLD ; X LOAD
Y00 – Y11 ; Y COUNTER OUTPUT 00 – 11
YCK ; Y CLOCK
YLD ; Y LOAD
YMD ; Y MODE

CXD2105AQ (SONY) FLAT PACKAGE

C-MOS DIGITAL COMB FILTER FOR VTR'S
-TOP VIEW-

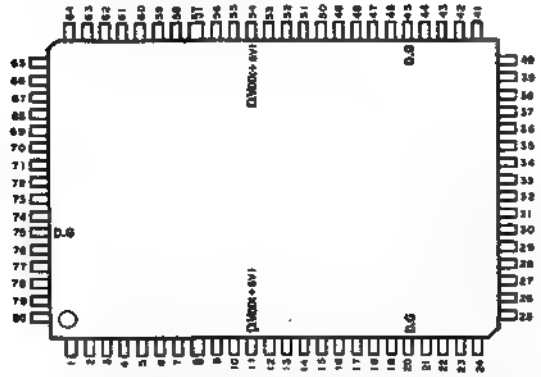

PIN No.	I/O	SIGNAL	PIN No.	I/O	SIGNAL	PIN No.	I/O	SIGNAL	PIN No.	I/O	SIGNAL
1	I	SPV	21	I	IGDO	41	I	IGW2	61	I	IGY1
2	O	OPER	22	I	IGC1	42	I	IGW3	62	I	IGY2
3	–	A.VDD P	23	I	IGIH	43	I	IGW4	63	I	IGH1
4	I	IGPE	24	I	IGRP	44	I	IGW5	64	O	ORZH
5	I	IGPC	25	I	IGOC	45	–	D.G	65	O	OR00
6	–	A.G P	26	–	A.VDD C	46	I/O	BMY1	66	I	IGRC
7	I	IGZV	27	O	OCIO	47	I/O	BMY2	67	I	IYC8
8	O	OZVD	28	O	OCVG	48	I/O	BMY3	68	I	IYC7
9	O	OZPS	29	–	ICVR	49	I/O	BMY4	69	I	IYC6
10	I	IGZP	30	O	OCIR	50	I/O	BMY5	70	I	IYC5
11	–	D.VDD	31	–	A.G C	51	I/O	BMY6	71	I	IYC4
12	I/O	BMC1	32	O	OCVB	52	I/O	BMY7	72	I	IYC3
13	I/O	BMC2	33	O	OYVB	53	I/O	BMY8	73	I	IYC2
14	I/O	BMC3	34	–	A.G Y	54	–	D.VDD	74	I	IYC1
15	I/O	BMC4	35	O	OYIR	55	I	IGAC	75	–	D.G
16	I/O	BMC5	36	–	IYVR	56	I	IGL3	76	O	OADC
17	I/O	BMC6	37	O	OYVG	57	I	IGL2	77	I	IGNP
18	I/O	BMC7	38	O	OYIO	58	I	IGL1	78	I	IGBE
19	I/O	BMC8	39	–	A.VDD Y	59	I/O	BASO	79	I	IGPF
20	–	D.G	40	I	IGW1	60	I	IGC2	80	I	IGCK

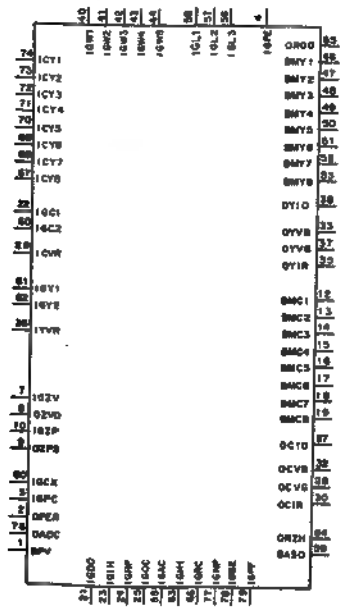

INPUT

SPV	; EXT/INT CLOCK SELECT
ICVR	; ESTABLISHES MAXIMUM AMPLITUDE VALUE FOR OCIO (PIN 27)
IGAC	; V CORRELATION CIRCUIT ON/OFF
IGBE	; SINGLE WAVE DETECTION ON/OFF (Y/C SEPARATION MODE)
IGC1	; V CORRELATION CIRCUIT SELECT
IGC2	; CHROMA FLAT SECTION HORIZONTAL FILTER SELECT (Y/C SEPARATION MODE)
IGCK	; EXTERNAL CLOCK
IGDO	; DROPOUT CORRECTION
IGH1	; FLAT SECTION HORIZONTAL FILTER SELECT (Y/C SEPARATION MODE)
IGIH	; SLEW MODE SET
IGL1 – IGL3	; LIMITER LEVEL ADJUST FOR Y SIGNAL COMB FILTER
IGNP	; NTSC/PAL FORMAT SELECT
IGOC	; OUTPUT ENABLE
IGPC	; VCO CONTROL
IGPE	; TEST
IGPF	; PLL SUBCARRIER
IGRC	; DELAY LINE LENGTH ADJUST
IGRP	; Y/C SEPARATION AND PLAYBACK MODE SELECT
IGW1 – IGW5	; Y COMB FILTER DEPTH ADJUST
IGY1, IGY2	; EDGE SECTION HORIZONTAL FILTER SELECT (Y/C SEPARATION MODE)
IGZP	; 1-BIT DELAY CIRCUIT
IGZV	; VCR HEAD SWITCHING
IYC1 – IYC8	; VIDEO SIGNAL
IYVR	; ESTABLISHES MAXIMUM AMPLITUDE VALUE FOR OYIO (PIN 38)

OUTPUT

OADC	; CLOCK
OCIO	; CHROMA ANALOG SIGNAL
OCIR	; CONNECT A RESISTOR 16x LARGE THAN THE RESISTOR AT OCIO (PIN 27)
OCVB	; CONNECT TO DIGITAL GND WHICH HAS A CAPACITANCE OF UP TO 0.1 µF
OCVG	; CONNECT TO AN ANALOG POWER SUPPLY WHICH HAS A CAPACITANCE OF UP TO 0.1 µF
OPER	; PLL ERROR
OR00	; "0" IS DETECTED AT ALL INPUTS
ORZH	; 1-BIT DELAY CIRCUIT
OYIO	; Y ANALOG SIGNAL
OYIR	; CONNECT A RESISTOR 16x LARGE THAN THE RESISTOR AT OYIO (PIN 38)
OYVB	; CONNECT TO DIGITAL GND WHICH HAS A CAPACITANCE OF UP TO 0.1 µF
OYVG	; CONNECT TO AN ANALOG POWER SUPPLY WHICH HAS A CAPACITANCE OF UP TO 0.1 µF
OZPS	; 1-BIT DELAY CIRCUIT
OZVD	; VSYNC PERIOD MASK

INPUT/OUTPUT

BASO	; EDGE DETECTION LEVEL SELECT (Y/C SEPARATION MODE)
BMC1 – BMC8	; CHROMA DIGITAL SIGNAL
BMY1 – BMY8	; Y DIGITAL SIGNAL

OTHER

A.G C	; ANALOG GND FOR CHROMA D/A
A.G P	; ANALOG GND FOR VCO
A.G Y	; ANALOG GND FOR Y D/A
A.VDD C	; ANALOG POWER SUPPLY FOR CHROMA D/A
A.VDD P	; ANALOG POWER SUPPLY FOR VCO
A.VDD Y	; ANALOG POWER SUPPLY FOR Y D/A
D.G	; DIGITAL GND
D.VDD	; POWER SUPPLY FOR DIGITAL

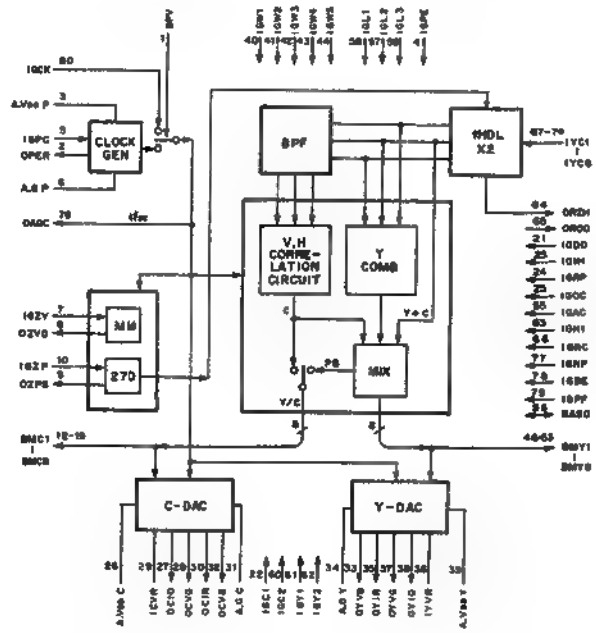

CXD8156Q (SONY)

16-BIT ADDER MULTIPLIER
-TOP VIEW-

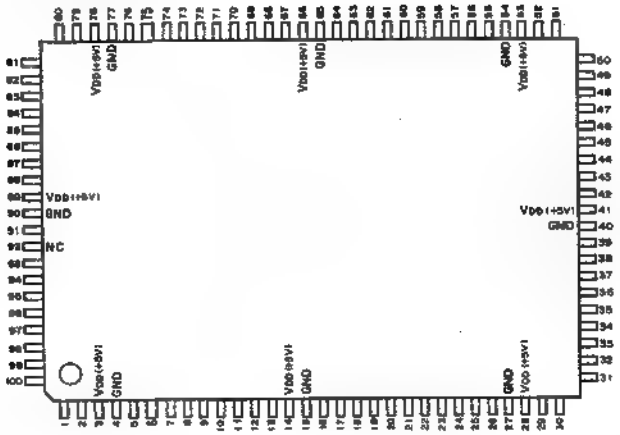

PIN No.	I/O	SYMBOL	PIN No.	I/O	SYMBOL	PIN No.	I/O	SYMBOL	PIN No.	I/O	SYMBOL
1	I	A DATA 00	26	I/O	B DATA 05	51	I	K DATA 06	76	■	Y DATA 11
2	I	A DATA 01	27	–	GND	52	I	K DATA 07	77	–	GND
3	–	VDD (+5V)	28	–	VDD (+5V)	53	–	VDD (+5V)	78	–	VDD (+5V)
4	–	GND	29	I/O	B DATA 06	54	–	GND	79	O	Y DATA 12
5	I	A DATA 02	30	I/O	B DATA 07	55	I	K DATA 08	80	O	Y DATA 13
6	I	A DATA 03	31	I/O	B DATA 08	56	I	K DATA 09	81	O	Y DATA 14
7	I	A DATA 04	32	I/O	B DATA 09	57	I	K DATA 10	82	O	Y DATA 15
8	I	A DATA 05	33	I/O	B DATA 10	58	I	K DATA 11	83	O	Y DATA 16
9	I	A DATA 06	34	I/O	B DATA 11	59	I	K DATA 12	84	O	Y DATA 17
10	I	A DATA 07	35	I/O	B DATA 12	60	I	K DATA 13	85	O	Y DATA 18
11	I	A DATA 08	36	I/O	B DATA 13	61	I	K DATA 14	86	O	Y DATA 19
12	I	A DATA 09	37	I/O	B DATA 14	62	I	K DATA 15	87	O	CARRY OUT
13	I	A DATA 10	38	I/O	B DATA 15	63	■	Y DATA 00	88	I	DIR
14	–	VDD (+5V)	39	I/O	B DATA 16	64	■	Y DATA 01	89	–	VDD (+5V)
15	–	GND	40	–	GND	65	–	GND	90	–	GND
16	I	A DATA 11	41	–	VDD (+5V)	66	–	VDD (+5V)	91	I	CLK B
17	I	A DATA 12	42	I	B DATA 17	67	O	Y DATA 02	92	–	NC
18	I	A DATA 13	43	I	B DATA 18	68	O	Y DATA 03	93	I	CLK A
19	I	A DATA 14	44	I	B DATA 19	69	O	Y DATA 04	94	I	CONT 1
20	I	A DATA 15	45	I	K DATA 00	70	O	Y DATA 05	95	I	CONT 2
21	I/O	B DATA 00	46	I	K DATA 01	71	O	Y DATA 06	96	I	CONT 3
22	I/O	B DATA 01	47	I	K DATA 02	72	O	Y DATA 07	97	I	CONT 4
23	I/O	B DATA 02	48	I	K DATA 03	73	O	Y DATA 08	98	I	CIN 1
24	I/O	B DATA 03	49	I	K DATA 04	74	O	Y DATA 09	99	I	CIN 2
25	I/O	B DATA 04	50	I	K DATA 05	75	O	Y DATA 10	100	O	TEST OUT

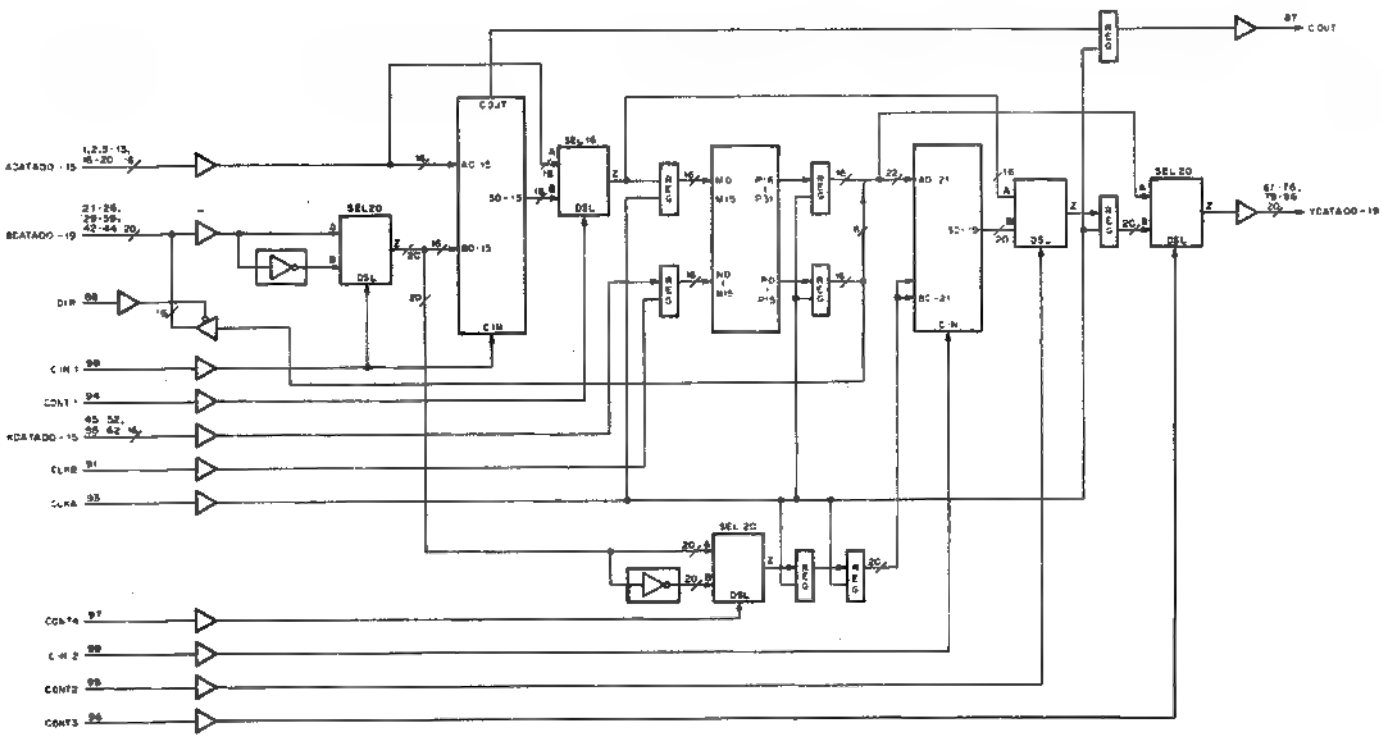

CXD8264Q (SONY)

C-MOS CONTROLLED TO ADDRESS ARITHMETIC

-TOP VIEW-

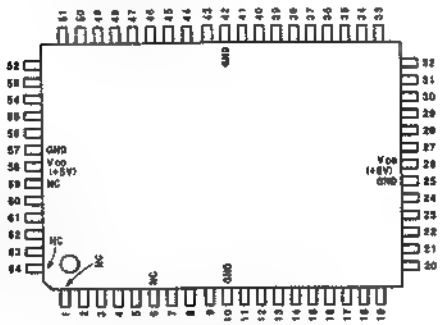

(Vcc=+5V)

PIN No.	I/O	SIGNAL	PIN No.	I/O	SIGNAL	PIN No.	I/O	SIGNAL	PIN No.	I/O	SIGNAL
1	-	NC	17	I	MD9	33	I	MD11	49	I	B0
2	I	AR0	18	I	MD4	34	I	MD12	50	I	B1
3	I	AR1	19	I	MD5	35	I	MD13	51	I	B2
4	I	LN0	20	I	MD6	36	I	MD14	52	I	B3
5	I	LN1	21	O	MA6	37	I	MD15	53	I	B4
6	-	NC	22	O	MA7	38	O	C0	54	I	B5
7	O	MA0	23	O	MA8	39	O	C1	55	I	B6
8	O	MA1	24	I	OE	40	O	C2	56	I	CK
9	■	MA2	25	-	GND	41	O	C3	57	-	GND
10	-	GND	■	-	Vcc	42	-	GND	58	-	Vcc
11	O	MA3	27	O	MA9	43	O	C4	59	-	NC
12	O	MA4	28	O	MA10	44	O	C5	60	I	B0
13	O	MA5	29	I	MD7	45	O	C6	61	I	B0
14	I	MD8	30	I	MD8	46	O	C7	62	I	B1
15	I	MD1	31	I	MD3	47	O	CE	63	I	B2
16	I	MD2	32	I	MD10	48	I	B5	64	-	NC

INPUT

AR0, AR1, LN0, LN1 :
ARITHMETIC AREA SIGNAL PORT

B0-B2 : ADDRESS BANK REGISTER DATA PORT

BS : ADDRESS BANK STROBE

CK : CLOCK

MD0-MD15 : MEMORY DATA PORT

OE : OUTPUT ENABLE FOR MEMORY ADDRESS

S0-S8 : START ADDRESS REGISTER

WS : WRITE STROBE FOR START ADDRESS REGISTER

OUTPUT

C0-C7 : CONTROL PORT FOR ADDRESS ARITHMETIC IC

CE : CHIP ENABLE

MA0-MA10 : MEMORY ADDRESS PORT

CXD8268Q (SONY)

C-MOS MEMORY ADDRESS BUS CONTROL

-TOP VIEW-

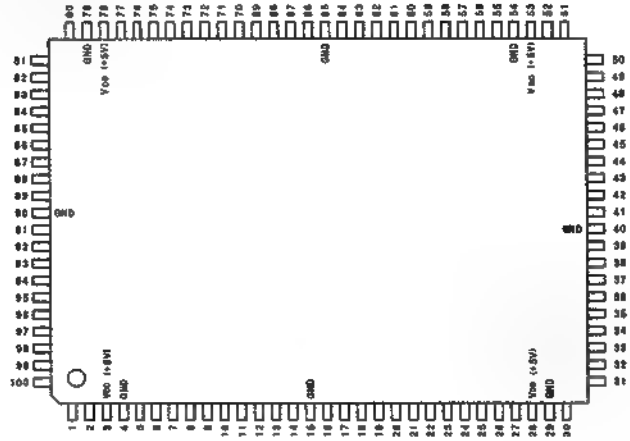

(Vcc=+5V)

PIN No.	I/O	SIGNAL	PIN No.	I/O	SIGNAL	PIN No.	I/O	SIGNAL	PIN No.	I/O	SIGNAL
1	O	MA001	■	O	MA006	51	O	MA008	76	O	MA014
2	O	MA002	27	O	MA007	52	O	MA010	77	O	MA015
3	-	Vcc	28	-	Vcc	53	-	Vcc	78	-	Vcc
4	-	GND	29	-	GND	54	-	GND	79	-	GND
5	O	MA100	30	■	MA105	55	O	MA108	80	O	MA113
6	O	MA101	■	O	MA106	56	O	MA109	81	O	MA114
7	O	MA102	32	O	MA107	57	O	MA110	82	O	MA115
8	I	PA00	33	I	PA12	58	I	CA00	83	I	WA03
9	I	PA01	34	I	PA13	59	I	CA09	84	I	WA04
10	I	PA02	35	I	PA14	60	I	CA10	85	I	WA05
11	I	PA03	■	I	PA15	61	I	CA11	86	I	WA06
12	I	PA04	37	I	PA16	62	I	CA12	87	I	WA07
13	O	MA003	38	I	CA00	63	■	MA011	88	I	WA08
14	O	MA004	39	I	CA01	64	■	MA012	89	I	WA09
15	-	GND	40	-	GND	65	-	GND	90	-	GND
16	O	MA103	41	I	CK	66	O	MA111	91	I	RENO
17	O	MA104	42	I	SEL0	67	■	MA112	92	I	SEL1
18	I	PA05	43	I	WENO	68	I	CA13	93	I	WA10
19	I	PA06	44	I	CA02	69	I	CA14	94	I	WA11
20	I	PA07	45	I	CA03	70	I	CA15	95	I	WA12
21	I	PA08	46	I	CA04	71	I	CA16	96	I	WA13
22	I	PA09	47	I	CA05	72	I	MA00	97	I	WA14
23	I	PA10	48	I	CA06	73	I	MA01	98	I	WA15
24	I	PA11	49	I	CA07	74	I	MA02	99	I	WA16
25	O	MA005	50	O	MA009	75	O	MA013	100	■	MA000

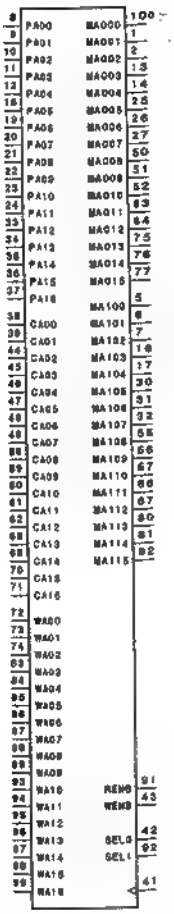

INPUT

CA00-CA16 : READ ADDRESS FROM MEMORY
CK : SYSTEM CLOCK
PA00-PA16 : READ ADDRESS FROM MEMORY
RENB : LATCH ENABLE FOR READ SYSTEM
SELO : READ/WRITE CHANGE

	MA0	MA1
0	READ	WRITE
1	WRITE	READ

SEL1 : READ ADDRESS SELECT
0:PA MODE, 1:CA MODE)
WA00-WA16 : WRITE ADDRESS TO MEMORY
WENB : LATCH ENABLE FOR WRITE SYSTEM

OUTPUT

MA000-MA015 : READ/WRITE ADDRESS
MA100-MA116 : READ/WRITE ADDRESS

CONTROL		OUTPUT	
SELO	SEL1	MA0	MA1
0	0	PA OUT	WA OUT
0	1	CA OUT	WA OUT
1	0	WA OUT	PA OUT
1	1	WA OUT	CA OUT

CXD8267Q (SONY)

C-MOS MEMORY DATA BUS CONTROL
-TOP VIEW-

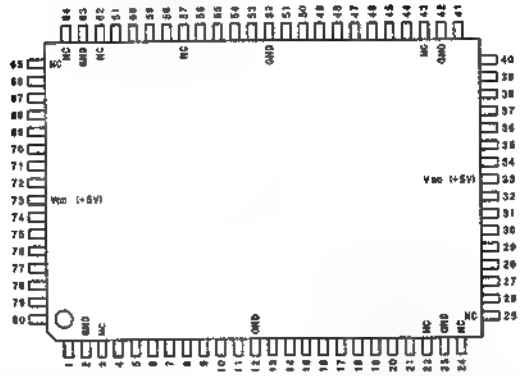

PIN No.	I/O	SIGNAL	PIN No.	I/O	SIGNAL	PIN No.	I/O	SIGNAL	PIN No.	I/O	SIGNAL
1	O	SD00	21	O	SD08	41	O	SD10	61	O	SD16
2	-	GND	22	-	NC	42	-	GND	62	-	NC
3	-	NC	23	-	GND	43	-	NC	63	-	GND
4	O	SD01	24	-	NC	44	O	SD11	64	-	NC
5	I/O	RD20	25	-	NC	45	I/O	RD30	65	-	NC
6	I/O	RD21	26	O	SD07	46	I/O	RD31	66	O	SD17
7	I/O	RD22	27	I/O	SD25	47	I/O	RD32	67	I/O	RD35
8	I/O	RD23	28	I/O	SD26	48	I/O	RD13	68	I/O	RD36
9	I/O	RD24	29	I/O	SD27	49	I/O	RD14	69	I/O	RD37
10	O	SD02	30	I	WD0	50	O	SD12	70	I	WD4
11	O	SD03	31	I	WD1	51	O	SD13	71	I	WD5
12	-	GND	32	I	WD2	52	-	GND	72	I	WD6
13	O	SD04	33	-	Vcc	53	O	SD14	73	-	Vcc
14	O	SD05	34	I	WD3	54	O	SD15	74	I	WD7
15	I/O	RD25	35	I	RCK	55	I/O	RD33	75	I	WCK
16	I/O	RD26	36	I	RENB	56	I/O	RD34	76	I	WENB
17	I	MODE	37	I	SELO	57	-	NC	77	I	SEL1
18	I/O	RD05	38	I/O	RD10	58	I/O	RD15	78	I/O	RD00
19	I/O	RD06	39	I/O	RD11	59	I/O	RD16	79	I/O	RD01
20	I/O	RD07	40	I/O	RD12	60	I/O	RD17	80	I/O	RD02

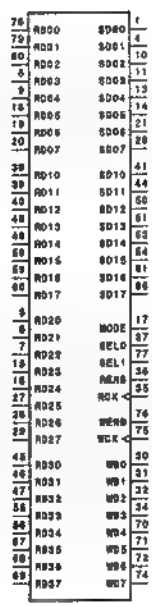

INPUT

MODE : DATA BUS CONTROLLER/SELECTOR CHANGE
(0:DATA BUS CONTROLLER, 1:8 TO 1 SELECTOR)
RCK : CLOCK FOR READ SYSTEM
RENB : LATCH ENABLE FOR SD00-SD07, SD10-SD17
SELO : READ/WRITE CHANGE (DATA BUS CONTROLLER MODE)

	RD0, RD1/RD2, RD3	
0	READ	WRITE
1	WRITE	READ

SD0 OUTPUT DATA SELECT (SELECTOR MODE)
(0:RD1, 1:RD3)
SEL1 : SD1 OUTPUT DATA SELECT (SELECTOR MODE)
WCK : CLOCK FOR WRITE SYSTEM
WD0-WD7 : MEMORY WRITE DATA
WENB : LATCH ENABLE FOR WD0-WD7

OUTPUT

SD00-SD07, SD10-SD17 :
READ DATA OUT FROM MEMORY

INPUT/OUTPUT

RD00-RD07, RD10-RD17, RD20-RD27, RD30-RD37 :
READ DATA IN/WRITE DATA OUT

CXD8558Q (SONY)

C-MOS NON-ADDITIVE MIXER AND DELAY ADJUSTER

-TOP VIEW-

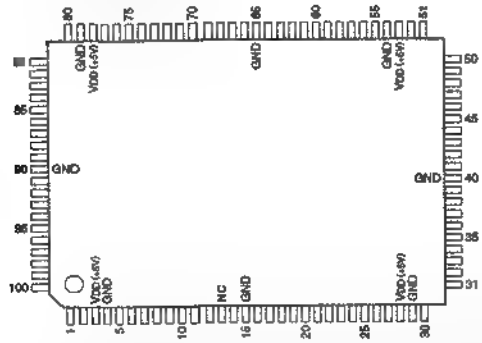

(VDD = +5 V)

PIN No.	I/O	SIGNAL	PIN No.	I/O	SIGNAL	PIN No.	I/O	SIGNAL	PIN No.	I/O	SIGNAL	PIN No.	I/O	SIGNAL
1	I	AL4	21	I	AH0	41	I	CLK	61	I	DH3	81	O	OL2
2	O	AEBL	22	I	AH1	42	I	BH7	62	I	DH2	82	O	OL1
3	—	VDD	23	I	AH2	43	I	CH7	63	I	DH1	83	O	OL0
4	—	GND	24	I	AH3	44	I	CH6	64	I	DH0	84	I	CL3
5	O	ALBL	25	I	AH4	45	I	CH5	65	—	GND	85	I	CL2
6	I	AL5	26	I	AH5	46	I	CH4	66	I	DL3	86	I	CL1
7	I	AL6	27	O	AEBH	47	I	CH3	67	I	DL2	87	I	CL0
8	I	AL7	28	—	VDD	48	I	CH2	68	I	DL1	88	I	BL0
9	I	SL0	29	—	GND	49	O	CH7	69	I	DL0	89	I	BL1
10	I	SL1	30	O	ALBH	50	O	CH6	70	I	CL7	90	—	GND
11	I	TCL	31	I	AH6	51	O	CH5	71	I	CL6	91	I	BL2
12	I	PNL	32	I	AH7	52	O	CH4	72	I	CL5	92	I	BL3
13	—	NC	33	I	BH0	53	—	GND	73	I	CL4	93	I	BL4
14	I	NAM0	34	I	BH1	54	—	VDD	74	O	OL7	94	I	BL5
15	—	GND	35	I	BH2	55	O	CH3	75	O	OL6	95	I	BL6
16	I	NAM1	36	I	BH3	56	O	CH2	76	O	OL5	96	I	BL7
17	I	PNH	37	I	BH4	57	O	CH1	77	O	OL4	97	I	AL0
18	I	TCH	38	I	BH5	58	O	CH0	78	—	VDD	98	I	AL1
19	I	SH0	39	I	BH6	59	I	CH1	79	—	GND	99	I	AL2
20	I	SH1	40	—	GND	60	O	CH0	80	O	OL3	100	I	AL3

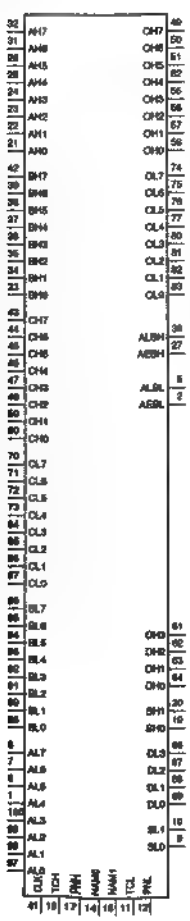

INPUT

AH0 - AH7	; A DATA (HIGHER BYTE)
AL0 - AL7	; A DATA (LOWER BYTE)
BH0 - BH7	; B DATA (HIGHER BYTE)
BL0 - BL7	; B DATA (LOWER BYTE)
CH0 - CH7	; C DATA (HIGHER BYTE)
CL0 - CL7	; C DATA (LOWER BYTE)
CLK	; CLOCK
DH0 - DH3	; DELAY DATA (HIGHER)
DL0 - DL3	; DELAY DATA (LOWER)
NAM0, NAM1	; NAM MODE
PNH	; NAM POLARITY (HIGHER)
PNL	; NAM POLARITY (LOWER)
SH0, SH1	; SELECT MODE (HIGHER)
SL0, SL1	; SELECT MODE (LOWER)
TCH	; NAM DATA FORMAT (HIGHER)
TCL	; NAM DATA FORMAT (LOWER)

OUTPUT

AEBH	; COMPARISON I (AH & BH)
AEBH	; COMPARISON II (AL & BL)
ALBH	; COMPARISON III (AH & BH)
ALBL	; COMPARISON IV (AL & BL)
OH0 - OH7	; DATA OUT (HIGHER)
OL0 - OL7	; DATA OUT (LOWER)

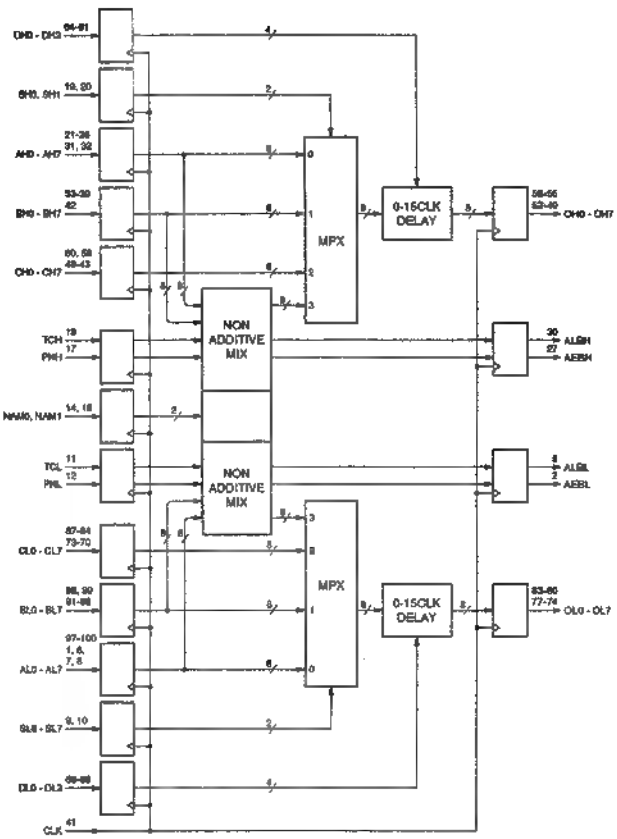

CXD8559Q (SONY)

C-MOS 2 DIMENSIONAL VARIABLE LOW-PASS FILTER

-TOP VIEW-

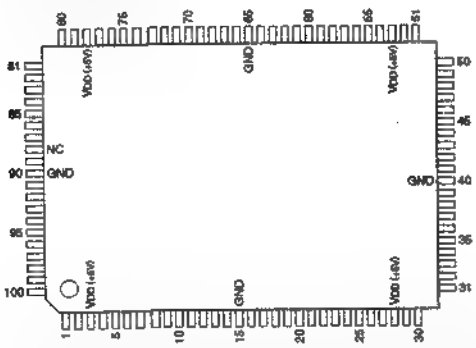

(VDD = +5 V)

PIN No.	I/O	SIGNAL	PIN No.	I/O	SIGNAL	PIN No.	I/O	SIGNAL	PIN No.	I/O	SIGNAL	PIN No.	I/O	SIGNAL
1	I	IN60	21	I	IN42	41	I	IN24	61	O	F07	81	I	HC1
2	I	IN61	22	I	IN43	42	I	IN25	62	O	F06	82	I	HC0
3	—	VDD	23	I	IN44	43	I	IN26	63	O	F05	83	I	HBY1
4	I	IN62	24	I	IN45	44	I	IN27	64	O	F04	84	I	HBY0
5	I	IN63	25	I	IN46	45	I	IN17	65	—	GND	85	I	HEN
6	I	IN64	26	I	IN47	46	I	IN16	66	O	F03	86	I	VEN
7	I	IN65	27	I	IN30	47	I	IN15	67	O	F02	87	I	TSC
8	I	IN66	28	—	VDD	48	I	IN14	68	O	F01	88	—	NC
9	I	IN67	29	I	IN31	49	I	IN13	69	O	F00	89	I	CLK
10	I	IN50	30	I	IN32	50	I	IN12	70	I	IN00	90	—	GND
11	I	IN51	31	I	IN33	51	I	IN11	71	I	HTS2	91	I	VC0
12	I	IN52	32	I	IN34	52	I	IN10	72	I	HTS1	92	I	VC1
13	I	IN53	33	I	IN35	53	—	VDD	73	I	HTS0	93	I	VC2
14	I	IN54	34	I	IN36	54	I	IN07	74	I	HC7	94	I	VC3
15	—	GND	35	I	IN37	55	I	IN06	75	I	HC6	95	I	VC4
16	I	IN55	36	I	IN20	56	I	IN05	76	I	HC5	96	I	VC5
17	I	IN56	37	I	IN21	57	I	IN04	77	I	HC4	97	I	VC6
18	I	IN57	38	I	IN22	58	I	IN03	78	—	VDD	98	I	VC7
19	I	IN40	39	I	IN23	59	I	IN02	79	I	HC3	99	I	VTS0
20	I	IN41	40	—	GND	60	I	IN01	80	I	HC2	100	I	VTS1

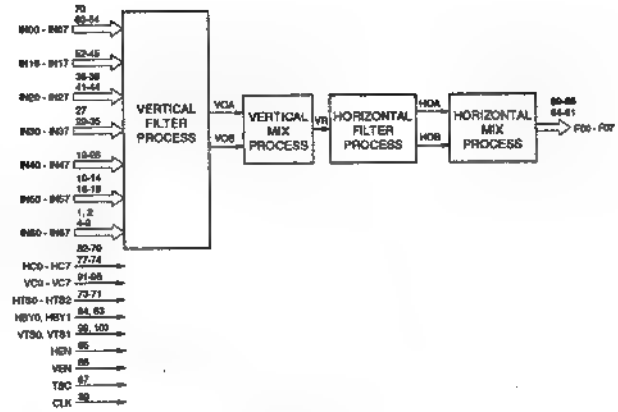

INPUT

CLK	;	CLOCK
HBY0, HBY1	;	HORIZONTAL BYPASS SELECT
HC0 - HC7	;	HORIZONTAL MIXING COEFFICIENT
HEN	;	HORIZONTAL CONTROL ENABLE
HTS0 - HTS2	;	HORIZONTAL TAP SELECT
IN00 - IN07	;	DATA 0
IN10 - IN17	;	DATA 1
IN20 - IN27	;	DATA 2
IN30 - IN37	;	DATA 3
IN40 - IN47	;	DATA 4
IN50 - IN57	;	DATA 5
IN60 - IN67	;	DATA 6
TSC	;	OPERATING MODE SELECT
VC0 - VC7	;	VERTICAL MIXING COEFFICIENT
VEN	;	VERTICAL CONTROL ENABLE
VTS0, VTS1	;	VERTICAL TAP SELECT

OUTPUT

F00 - F07	;	FILTER OUT

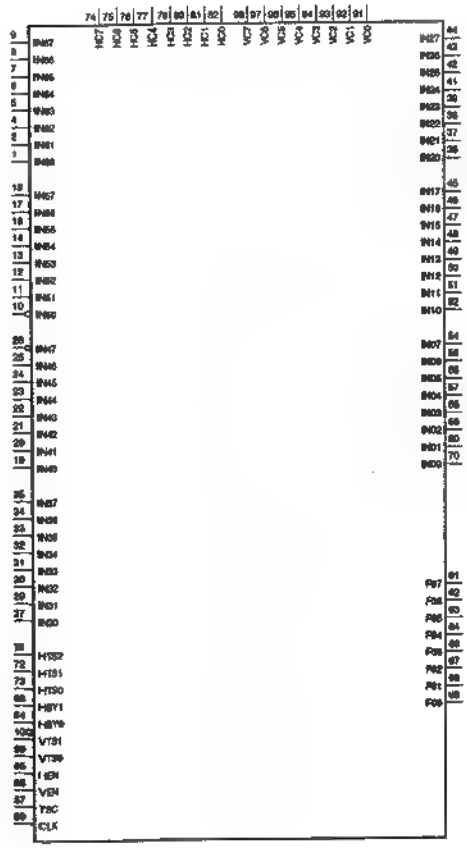

CXD8560Q (SONY)

C-MOS DIGITAL MIX EFFECTS
-TOP VIEW-

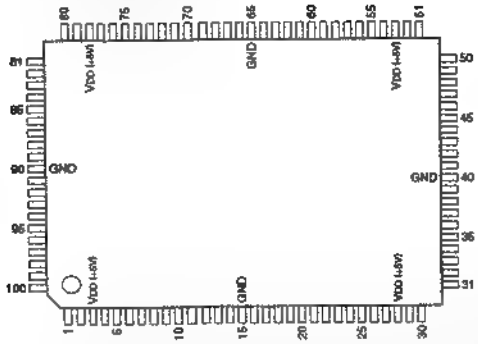

(Vdd = +5 V)

PIN No.	I/O	SIGNAL	PIN No.	I/O	SIGNAL	PIN No.	I/O	SIGNAL	PIN No.	I/O	SIGNAL	PIN No.	I/O	SIGNAL
1	I	CCF	21	I	YC1	41	I	CLK	61	O	CC7	81	I	CA3
2	I	CC7	22	I	YC2	42	I	YB7	62	O	CC6	82	I	CA2
3	—	VDD	23	I	YC3	43	I	YB6	■	O	CC5	83	I	CA1
4	I	CC6	24	I	YC4	44	I	YA0	64	■	CC4	84	I	CA0
5	I	CC5	25	I	YC5	45	I	YA1	65	—	GND	85	I	CB3
6	I	CC4	26	I	YC6	46	I	YA2	66	O	CC3	86	I	CB7
7	I	CC3	27	I	YC7	47	I	YA3	67	O	CC2	87	I	CB6
8	I	CC2	28	—	VDD	48	I	YA4	68	■	CC1	88	I	CB5
9	I	CC1	29	I	YCS	49	I	YA5	69	O	CC0	89	I	CB4
10	I	CC0	30	I	YCE	50	I	YA6	70	I	D4	90	—	GND
11	O	YC00	31	I	YCP	51	I	YA7	71	I	D3	91	I	CB3
12	O	YC01	32	I	DDL	52	I	YAS	72	I	D2	92	I	CB2
13	O	YC02	33	I	YB0	■	—	VDD	73	I	D1	93	I	CB1
14	■	YC03	34	I	YB1	■	I	A1	74	I	D0	94	I	CB0
15	—	GND	35	I	YB2	56	I	A0	75	I	CAS	95	I	CDRS
16	O	YC04	36	I	YB3	56	I	WE1	76	I	CA7	96	I	CCG
17	O	YC05	37	I	YB4	57	I	WE0	77	I	CA6	97	I	CCP
18	O	YC06	38	I	YB5	58	I	D7	78	—	VDD	98	I	CCE
19	O	YC07	39	I	YB6	59	I	D6	79	I	CA5	99	I	CCS
20	I	YC0	40	—	GND	60	I	D5	80	I	CA4	100	I	CCRS

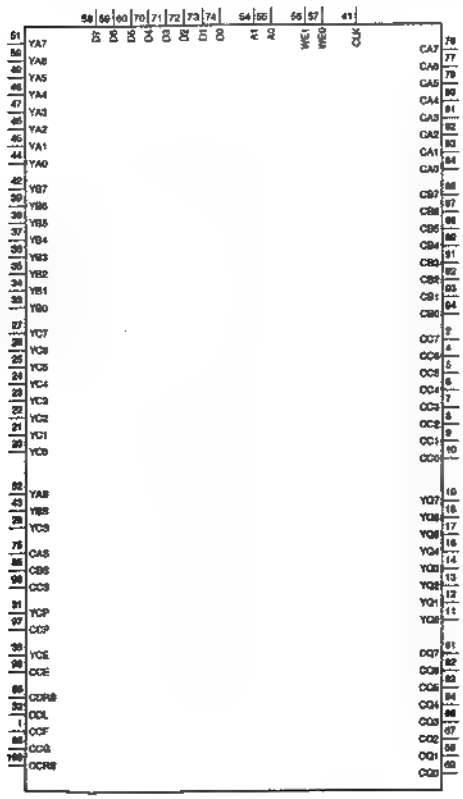

INPUT

A0, A1	; INTERNAL REGISTER ADDRESS
CA0 - CA7	; MIXER (C) A DATA
CAS	; MIXER (C) A DATA SELECTOR
CB0 - CB7	; MIXER (C) B DATA
CBS	; MIXER (C) B DATA SELECTOR
CC0 - CC7	; MIXER (C) C DATA
CCE	; MIXER (C) C ENABLE
CCF	; MIXER (C) PRE FILTER CONTROL
CCG	; MIXER (C) C GATE
CCP	; MIXER (C) C POLARITY
CCRS	; MIXER (C) C REGISTER SELECTOR
CCS	; MIXER (C) C DATA SELECTOR
CDRS	; C DATA REGISTER SELECTOR
CLK	; CLOCK
D0 - D7	; INTERNAL REGISTER DATA
DDL	; DATA DELAY CONTROL
WE0, WE1	; INTERNAL REGISTER WRITE ENABLE
YA0 - YA7	; MIXER (Y) A DATA
YAS	; MIXER (Y) A DATA SELECTOR
YB0 - YB7	; MIXER (Y) B DATA
YBS	; MIXER (Y) B DATA SELECTOR
YC0 - YC7	; MIXER (Y) C DATA
YCE	; MIXER (Y) C ENABLE
YCP	; MIXER (Y) C POLARITY
YCS	; MIXER (Y) C DATA SELECTOR

OUTPUT

CC0 - CC7	; MIXER (C) DATA OUTPUT
YC0 - YC7	; MIXER (Y) DATA OUTPUT

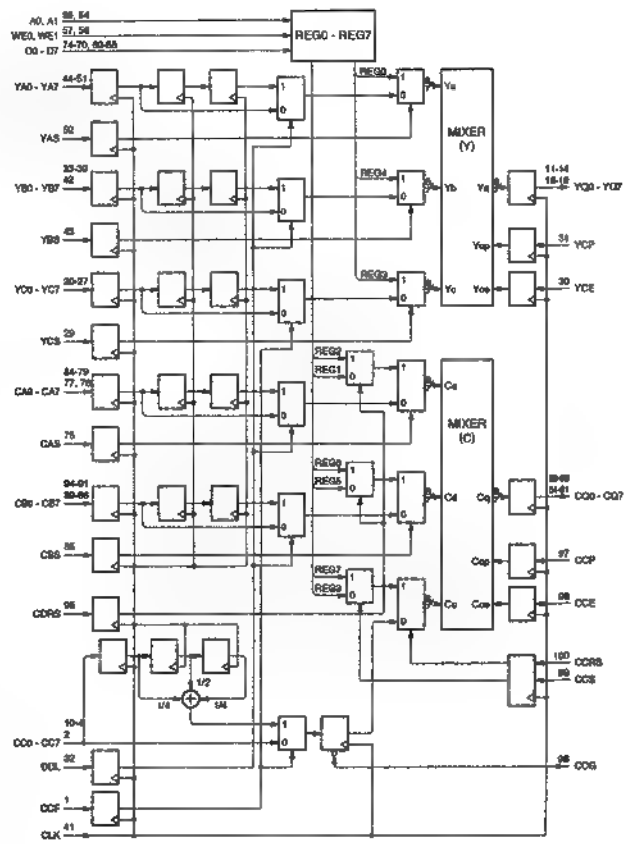

CXD8839Q (SONY)

C-MOS ADDRESS ARITHMETIC

-TOP VIEW-

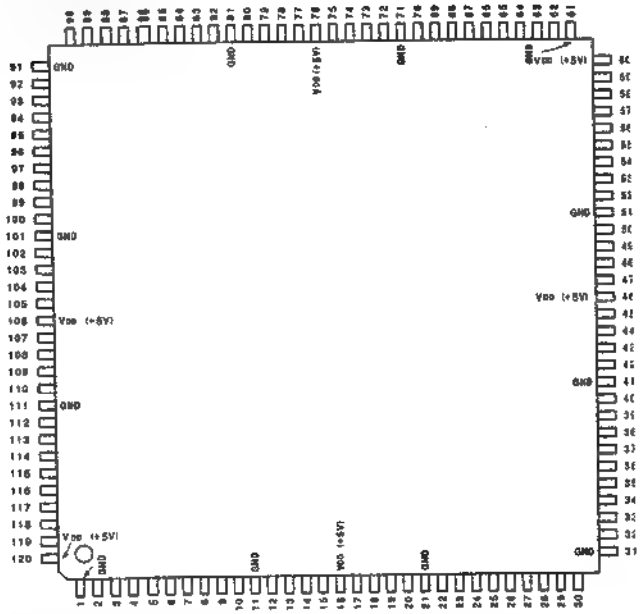

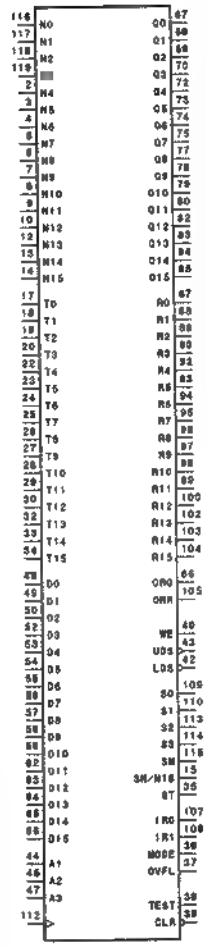

INPUT

A1-A3	: INTERNAL REGISTER ADDRESS
CK	: CLOCK
CLR	: INTERNAL REGISTER CLEAR
D0-D15	: INTERNAL REGISTER DATA
IR0	: ORG ORR OUTPUT CONTROL AT PACE-PECTIVE MODE
IR1	: ORG ORR OUTPUT CONTROL AT TURN OVER PAGE MODE
LDS	: LOWER DATA STROBE
MODE	: MODE SELECT 0:PACE-PECTIVE MODE, 1:TURN OVER PAGE MODE)
N0-N15	: N DATA PORT
OVFL	: OVERFLOW
S0-S3	: SHIFT NUMERICAL PORT
SM	: SHIFT MODE SELECT 0:RIGHT SHIFT MODE, 1:LEFT SHIFT MODE)
SM/N16	: PACE-PECTIVE MODE: M DATA CODE TURN OVER PAGE MODE: N DATA MSBH
ST	: PACE-PECTIVE MODE: T DATA CODE TURN OVER PAGE MODE: DON'T CARE
T0-T15	: T DATA PORT
TEST	: TEST TERMINAL
UDS	: UPPER DATA STROBE
WE	: WRITE ENABLE

OUTPUT

ORQ	: Q DATA CLIPPING SIGNAL
ORR	: R DATA CLIPPING SIGNAL
Q0-Q15	: Q DATA PORT
R0-R15	: R DATA PORT

(Vss = 0V)

PIN No.	I/O	SIGNAL	PIN No.	I/O	SIGNAL	PIN No.	I/O	SIGNAL	PIN No.	I/O	SIGNAL
1	-	GND	31	-	GND	61	-	GND	91	-	GND
2	I	N4	32	I	T13	62	I	D11	92	O	R4
3	I	N5	33	I	T14	63	I	D12	93	O	R5
4	I	N6	34	I	T15	64	I	D13	94	O	R6
5	I	N7	35	I	ST	65	I	D14	95	O	R7
6	I	N8	36	I	MODE	66	I	D15	96	O	R8
7	I	N9	37	I	OVFL	67	O	Q0	97	O	R9
8	I	N10	38	I	TEST	68	O	Q1	98	O	R10
9	I	N11	39	I	CLR	69	O	Q2	99	O	R11
10	I	N12	40	I	WE	70	H	Q3	100	O	R12
11	-	GND	41	-	GND	71	-	GND	101	-	GND
12	I	N13	42	I	LDS	72	O	Q4	102	H	R13
13	I	N14	43	I	UDS	73	O	Q5	103	O	R14
14	I	N15	44	I	H	74	O	Q6	104	O	R15
15	I	SM/N16	45	I	A2	75	O	Q7	105	O	ORR
16	-	Vss	46	-	Vss	76	-	Vss	106	-	Vss
17	I	T0	47	I	A3	77	O	Q8	107	I	IR0
18	I	T1	48	I	D0	78	O	Q9	108	I	IR1
19	I	T2	49	I	D1	79	O	Q10	109	I	S0
20	I	T3	50	I	D2	80	O	Q11	110	I	S1
21	-	GND	51	-	GND	81	-	GND	111	-	GND
22	I	T4	52	I	D3	82	O	Q12	112	I	CK
23	I	T5	53	I	D4	83	O	Q13	113	I	S2
24	I	T6	54	I	D5	84	O	Q14	114	I	S3
25	I	T7	55	I	D6	85	O	Q15	115	I	SM
26	I	T8	56	I	D7	86	O	ORQ	116	I	N0
27	I	T9	57	I	D8	87	O	R0	117	I	N1
28	I	T10	58	I	D9	88	O	R1	118	I	N2
29	I	T11	59	I	D10	89	O	R2	119	I	N3
30	I	T12	60	-	Vss	90	O	R3	120	-	Vss

CXD8596Q (SONY)

V-RAM CONTROLLER (PCI)

-TOP VIEW-

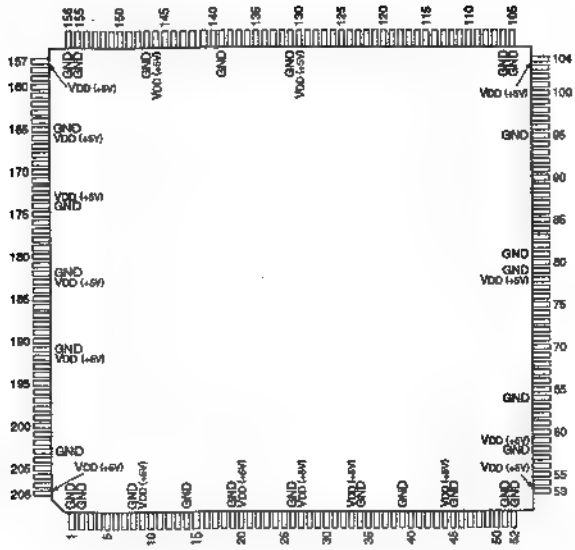

INPUT

CBE0 - CBE3	; PCI BUS SIGNAL, C/BE 0-3
CIN0 - CIN7	; CAPTURE DATA (CHROMA) 0-7
CLK	; PCI BUS SIGNAL, CLK
COUNT LD	; DISPLAY ADDRESS COUNTER LOAD
COUNT UP	; DISPLAY ADDRESS COUNTER UP
FRAME	; PCI BUS SIGNAL, FRAME
GNT	; PCI BUS SIGNAL, GNT
HBLK	; H BLANKING
IDSEL	; PCI BUS SIGNAL, IDSEL
INTCAP	; INTERRUPT CAPABILITY
INTEN	; INTERRUPT ENABLE
IRDY	; PCI BUS SIGNAL, IRDY
LOCK	; PCI BUS SIGNAL, LOCK
PXLCLK	; PIXEL CLOCK
REQ	; PCI BUS SIGNAL, REQ
RST	; PCI BUS SIGNAL, RST
TEST0, TEST1	; TEST 0, 1
VBLK	; V BLANKING
YIN0 - YIN7	; CAPTURE DATA (LUMINANCE) 0-7

OUTPUT

CAS0 - CAS3	; VRAM CAS 0-3
CS0, CS1	; EXTERNAL I/O CS 0, 1
GENIO0/T0	; GENERAL I/O 0/EXT. I/O SEQ. STATE 0
GENIO1/T1	; GENERAL I/O 1/EXT. I/O SEQ. STATE 1
HPOS0	; H POSITION
INT	; PCI BUS SIGNAL, INT A
IOCLK	; EXTERNAL I/O CLOCK
IOLDA	; EXTERNAL I/O ADDRESS LOAD
IORD	; EXTERNAL I/O READ
IORST	; EXTERNAL I/O RESET
IOWR	; EXTERNAL I/O WRITE
OE0, OE1	; VRAM OE/OE 0, 1
RAS0 - RAS2	; VRAM RAS 0-2
SE0 - SE2	; VRAM SE 0-2
SERR	; PCI BUS SIGNAL, SERR
VA0 - VA8	; VRAM ADDRESS 0-8
WE0 - WE3	; VRAM WE 0-3

INPUT/OUTPUT

AD0 - AD31	; PCI BUS SIGNAL, AD 0-31
DEVSEL	; PCI BUS SIGNAL, DEVSEL
HACT/T2	; H ACTIVE AREA/EXT. I/O SEQ. STATE2
IO0 - IO15	; EXTERNAL I/O ADDRESS/DATA 0-15
PAR	; PCI BUS SIGNAL, PAR
PERR	; PCI BUS SIGNAL, PERR
STOP	; PCI BUS SIGNAL, STOP
TRDY	; PCI BUS SIGNAL, TRDY
VACT/T3	; V ACTIVE AREA/EXT. I/O SEQ. STATE3
VD0 - VD31	; VRAM DATA 0-31

(VDD = +5V)

PIN NO.	I/O	SIGNAL	PIN NO.	I/O	SIGNAL	PIN NO.	I/O	SIGNAL	PIN NO.	I/O	SIGNAL	PIN NO.	I/O	SIGNAL
1	—	GND	43	I/O	AD12	85	O	GENIO0/T0	127	O	SE0	169	I/O	VD24
2	—	GND	44	—	VDD	86	O	IOLDA	128	O	OE1	170	I/O	VD23
3	I/O	AD29	45	—	GND	87	I/O	IO15	129	O	OE0	171	I/O	VD22
4	I/O	AD28	46	I/O	AD11	88	I/O	IO14	130	—	VDD	172	I/O	VD21
5	I/O	AD27	47	I/O	AD10	89	I/O	IO13	131	—	GND	173	—	VDD
6	I/O	AD26	48	I/O	AD9	90	I/O	IO12	132	O	WE3	174	—	GND
7	I/O	AD25	49	I/O	AD8	91	I/O	IO11	133	O	WE2	175	I/O	VD20
8	—	GND	50	I	CBE0	92	I/O	IO10	134	O	WE1	176	I/O	VD19
9	—	VDD	51	—	GND	93	I/O	IO9	135	O	WE0	177	I/O	VD18
10	I/O	AD24	52	—	GND	94	I/O	IO8	136	O	CAS3	178	I/O	VD17
11	I	CBE3	53	—	VDD	95	—	GND	137	O	[illegible]	179	I/O	VD16
12	I	IDSEL	54	I/O	AD7	96	I/O	IO7	138	O	[illegible]	180	I/O	VD15
13	I/O	AD23	55	I/O	AD6	97	I/O	IO6	139	—	[illegible]	181	I/O	VD14
14	—	GND	56	I/O	AD5	98	I/O	IO5	140	O	CAS2	182	—	GND
15	I/O	AD22	57	I/O	AD4	99	I/O	IO4	141	O	CAS1	183	—	VDD
16	I/O	AD21	58	—	GND	100	I/O	IO3	142	O	CAS0	184	I/O	VD13
17	I/O	AD20	59	—	VDD	101	I/O	IO2	143	O	RAS2	185	I/O	VD12
18	I/O	AD19	60	I/O	AD3	102	I/O	IO1	144	[illegible]	RAS1	186	I/O	VD11
19	—	GND	61	I/O	AD2	103	I/O	IO0	145	O	RAS0	187	I/O	VD10
20	—	VDD	62	I/O	AD1	104	—	VDD	146	—	VDD	188	I/O	VD9
21	I/O	AD18	63	I/O	AD0	105	—	GND	147	—	GND	189	I/O	VD8
22	I/O	AD17	64	—	GND	106	—	GND	148	O	VA8	190	I/O	VD7
23	I/O	AD16	65	I	INTCAP	107	I	PXLCLK	149	O	VA7	191	—	GND
24	I	CBE2	66	I	INTEN	108	I	CIN7	150	O	VA6	192	—	VDD
25	I	FRAME	67	I	TEST1	109	I	CIN6	151	[illegible]	VA5	193	I/O	VD6
26	—	GND	68	I	TEST0	110	I	CIN5	152	[illegible]	VA4	194	I/O	VD5
27	—	VDD	69	O	HPOS0	111	I	CIN4	153	[illegible]	VA3	195	I/O	VD4
28	I	IRDY	70	I/O	VACT/T3	112	I	CIN3	154	O	VA2	196	I/O	VD3
29	I/O	TRDY	71	I/O	HACT/T2	113	I	CIN2	155	—	GND	197	I/O	VD2
30	I/O	DEVSEL	72	I	VBLK	114	I	CIN1	156	—	GND	198	I/O	VD1
31	I/O	STOP	73	I	HBLK	115	I	CIN0	157	—	VDD	199	I/O	VD0
32	I	LOCK	74	I	COUNT UP	116	I	YIN7	158	O	VA1	200	O	INT
33	—	VDD	75	I	COUNT LD	117	I	YIN6	159	O	VA0	201	I	RST
34	—	GND	76	O	CS1	118	I	YIN5	160	I/O	VD31	202	I	CLK
35	I/O	PERR	77	O	CS0	119	I	YIN4	161	I/O	VD30	203	—	GND
36	O	S[illegible]	78	—	VDD	120	I	YIN3	162	I/O	VD29	204	I	GNT
37	I/O	PAR	79	—	GND	121	I	YIN2	163	I/O	VD28	[illegible]	I	REQ
38	I	CBE1	80	O	IOCLK	122	I	YIN1	164	I/O	VD27	206	I/O	AD31
39	—	GND	81	—	GND	123	I	YIN0	165	—	GND	207	I/O	AD30
40	I/O	AD15	82	O	IORST	124	O	GENIO1/T1	166	—	VDD	208	—	VDD
41	I/O	AD14	83	O	IORD	125	O	SE3	167	I/O	VD26			
42	I/O	AD13	84	O	IOWR	126	O	SE1	168	I/O	VD25			

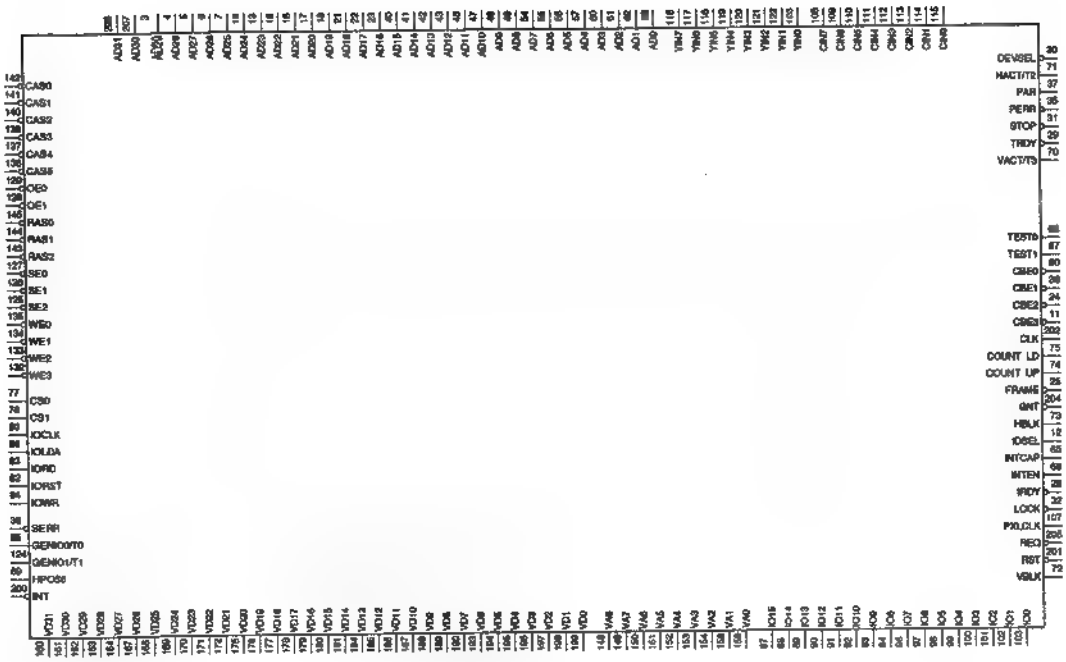
AD31
AD30
AD29
AD28
AD27
AD26
AD25
AD24
AD23
AD22
AD21
AD20
AD19
AD18
AD17
AD16
AD15
AD14
AD13
AD12
AD11
AD10
AD9
AD8
AD7
AD6
AD5
AD4
AD3
AD2
AD1
AD0
VM7
VM6
VM5
VM4
VM3
VM2
VM1
VM0
VM15
VM14
VM13
VM12
VM11
VM10
VM9
VM8
CM7
CM6
CM5
CM4
CM3
CM2
CM1
CM0
CAS0
CAS1
CAS2
CAS3
CAS4
CAS5
OE0
OE1
RAS0
RAS1
RAS2
SE0
SE1
SE2
WE0
WE1
WE2
WE3
CS0
CS1
IOCLK
IOLDA
IORD
IORST
IOWR
SERR
GENIO0/T0
GENIO1/T1
HPOS0
INT
DEVSEL
HACT/T2
PAR
PERR
STOP
TRDY
VACT/T3
TEST0
TEST1
CBE0
CBE1
CBE2
CBE3
CLK
COUNT LD
COUNT UP
FRAME
GNT
HBLK
IDSEL
INTCAP
INTEN
IRDY
LOCK
P3D,CLK
REQ
RST
VBLK

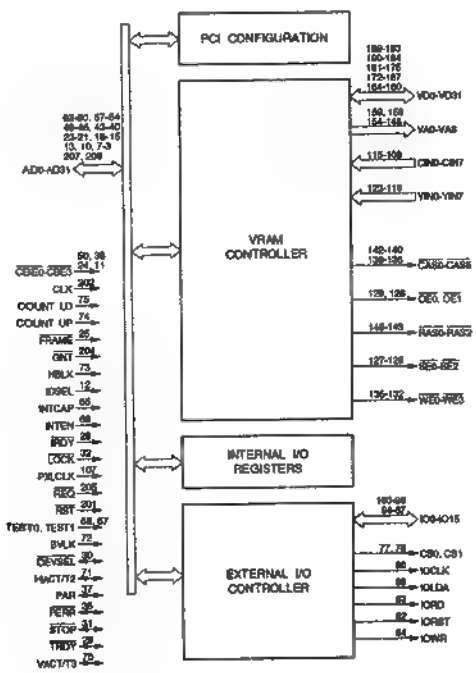
PCI CONFIGURATION
VRAM CONTROLLER
INTERNAL I/O REGISTERS
EXTERNAL I/O CONTROLLER
AD0-AD31
CBE0-CBE3
CLK
COUNT LD
COUNT UP
FRAME
GNT
HBLK
IDSEL
INTCAP
INTEN
IRDY
CSCR
P3D,CLK
REQ
RST
TEST0, TEST1
PAR
DEVSEL
HACT/T2
PERR
STOP
TRDY
VACT/T3
VD0-VD31
VA0-VA8
CIN0-CIN7
YIN0-YIN7
CAS0-CAS8
OE0, OE1
RAS0-RAS2
SE0-SE2
WE0-WE3
IO0-IO15
CS0, CS1
IOCLK
IOLDA
IORD
IORST
IOWR

CXD8597Q (SONY)

C-MOS PIXEL DATA CONTROL
-TOP VIEW-

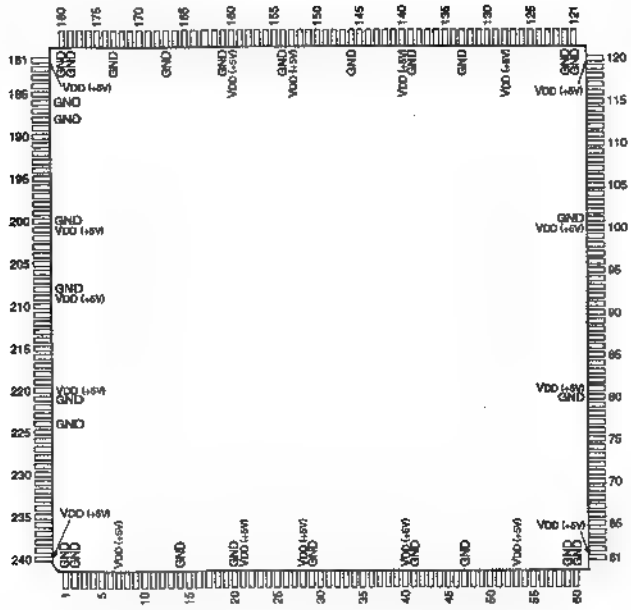

INPUT
BA0 - BA7 ; B PIXEL DATA
BB0 - BB7 ; B PIXEL DATA
CLR ; INTERNAL REGISTER CLEAR
CS ; CHIP SELECT
DCLK ; PIXEL CLOCK (13.5 MHz)
HP0 ; VRAM SERIAL CLOCK PHASE SETTING
KA0 - KA7 ; K PIXEL DATA
KB0 - KB7 ; K PIXEL DATA
IORD ; I/O READ SIGNAL
IOWR ; I/O WRITE SIGNAL
LDA ; ADDRESS LOAD SIGNAL
PCLK ; I/O CLOCK (33.3 MHz)
RA0 - RA7 ; R PIXEL DATA
RB0 - RB7 ; R PIXEL DATA
RST ; RESET
TEST2 ; HIGH = TEST MODE/LOW = NORMAL
UPA ; ADDRESS UP SIGNAL
VFLD ; EXTERNAL FLD
VHD ; EXTERNAL HD
VVD ; EXTERNAL VD
YA0 - YA7 ; Y PIXEL DATA
YB0 - YB7 ; Y PIXEL DATA

OUTPUT
B0 - B7 ; B PIXEL DATA
CDUNT LD ; DISPLAY ADDRESS STROBE SIGNAL
CDUNT UP ; DISPLAY ADDRESS UP SIGNAL
CSYNC ; CHROMINANCE SYNC
FLD ; FIELD
HACTIVE ; AREA (HORIZONTAL)
HBLK ; HORIZONTAL BLANKING
HSYNC ; HORIZONTAL SYNC
K0 - K7 ; K PIXEL DATA
KVBLK ; KEY BLANKING
MODE0, MODE1 ; MODE SELECT
R0 - R7 ; R PIXEL DATA
SA00 - SA16 ; SRAM ADDRESS
SCBLK ; SCLK BLANKING
SCLK ; VRAM SERIAL CLOCK
SOE0, SOE1 ; SRAM OUTPUT ENABLE (SOE0 = BC, RC SIDE/SOE1 = YC, KC SIDE)
SWE0, SWE1 ; SRAM WRITE ENABLE (SWE0 = BC, RC SIDE/SWE1 = YC, KC SIDE)
VACTIVE ; AREA (VERTICAL)
VBLK ; VERTICAL BLANKING
VSYNC ; VERTICAL SYNC
Y0 - Y7 ; Y PIXEL DATA

INPUT/OUTPUT
AD00 - AD15 ; ADDRESS/DATA BUS
BC0 - BC7 ; B SRAM DATA BUS
KC0 - KC7 ; K SRAM DATA BUS
RC0 - RC7 ; R SRAM DATA BUS
YC0 - YC7 ; Y SRAM DATA BUS

(VDD = +5V)

PIN NO.	I/O	SIGNAL	PIN NO.	I/O	SIGNAL	PIN NO.	I/O	SIGNAL	PIN NO.	I/O	SIGNAL	PIN NO.	I/O	SIGNAL
1	—	GND	49	I/O	KC4	97	I	BB6	145	I/O	RC5	193	I	VHD
2	—	GND	50	I/O	KC5	98	I	BB7	146	—	GND	194	I	VVD
3	O	MODE0	51	I/O	KC6	99	I	RB0	147	I/O	RC6	195	I	VFLD
4	O	MODE1	52	I/O	KC7	100	—	VDD	148	I/O	RC7	196	I/O	AD00
5	O	SA00	53	—	VDD	101	—	GND	149	O	B0	197	I/O	AD01
6	O	SA01	54	I	BA0	102	I	RB1	150	O	[redacted]	198	I/O	AD02
7	—	VDD	55	I	BA1	103	I	RB2	151	O	B2	199	I/O	AD03
8	I	CLR	56	I	BA2	104	I	RB3	152	O	B3	200	—	GND
9	O	SA02	57	I	BA3	105	I	RB4	153	—	VDD	201	—	VDD
10	O	SA03	58	I	BA4	106	I	RB5	154	—	GND	202	I/O	AD04
11	O	SA04	59	—	GND	107	I	RB6	155	O	B4	203	I/O	AD05
12	O	SA05	60	—	GND	108	I	RB7	156	O	B5	204	I/O	AD06
13	O	SA06	61	—	VDD	109	I	YB0	157	O	B6	205	I/O	AD07
14	—	GND	62	I	BA5	110	I	YB1	158	O	B7	206	I/O	AD08
15	O	SA07	63	I	BA6	111	I	YB2	159	O	R0	207	I/O	AD09
16	O	SA08	64	I	BA7	112	I	YB3	160	—	VDD	208	—	GND
17	O	SA09	65	I	BA0	113	I	YB4	161	—	GND	209	—	VDD
18	O	SA10	66	I	RA1	114	I	YB5	162	O	R1	210	I/O	AD10
19	O	SA11	67	I	RA2	115	I	YB6	163	O	R2	211	I/O	AD11
20	—	GND	68	I	RA3	116	I	YB7	164	O	R3	212	I/O	AD12
21	—	VDD	69	I	RA4	117	I	KB0	165	O	R4	213	I/O	AD13
22	I	TEST2	70	I	RA5	118	I	KB1	166	O	R5	214	I/O	AD14
23	O	SA12	71	I	RA6	119	I	KB2	167	—	GND	215	I/O	AD15
24	O	SA13	72	I	RA7	120	—	VDD	168	O	R6	216	I	LDA
25	O	SA14	73	I	YA0	121	—	GND	169	O	R7	217	I	UPA
26	O	SA15	74	I	YA1	122	—	GND	170	O	Y0	218	I	IOWR
27	O	SA16	75	I	YA2	123	I	KB3	171	O	Y1	219	I	IORD
28	—	VDD	76	I	YA3	124	I	KB4	172	O	Y2	220	—	VDD
29	—	GND	77	I	YA4	125	I	KB5	173	—	GND	221	—	GND
30	O	SWE0	78	I	YA5	126	I	KB6	174	O	Y3	222	I	RST
31	O	SWE1	79	I	YA6	127	I	KB7	175	O	Y4	223	I	PCLK
32	O	SOE0	80	—	GND	128	—	VDD	176	O	Y5	[redacted]	—	GND
33	O	SOE1	[redacted]	—	VDD	129	I/O	BC0	177	O	Y6	[redacted]	I	CS
34	I/O	YC0	82	I	YA7	130	I/O	BC1	178	O	Y7	[redacted]	O	CDUNT LD
35	I/O	YC1	83	I	KA0	131	I/O	BC2	179	—	GND	227	O	CDUNT UP
36	I/O	YC2	84	I	KA1	132	I/O	BC3	180	—	GND	228	O	HSYNC
37	I/O	YC3	85	I	KA2	133	—	GND	181	—	VDD	229	O	VSYNC
38	I/O	YC4	86	I	KA3	134	I/O	BC4	182	O	K0	230	O	CSYNC
39	I/O	YC5	87	I	KA4	135	I/O	BC5	183	O	K1	231	O	HBLK
40	—	VDD	88	I	KA5	136	I/O	BC6	184	O	K2	232	O	VBLK
41	—	GND	89	I	KA6	137	I/O	BC7	185	O	K3	233	O	SCBLK
42	I/O	YC6	90	I	KA7	138	I/O	RC0	186	—	GND	234	O	KVBLK
43	I/O	YC7	91	I	BB0	139	—	GND	187	I	DCLK	235	O	FLD
44	I/O	KC0	92	I	BB1	140	—	VDD	188	—	GND	236	O	HACTIVE
45	I/O	KC1	93	I	BB2	141	I/O	RC1	189	O	K4	237	O	VACTIVE
46	I/O	KC2	94	I	BB3	142	I/O	RC2	190	O	K5	238	O	SCLK
47	—	GND	95	I	BB4	143	I/O	RC3	191	O	K6	239	I	HP0
48	I/O	KC3	96	I	BB5	144	I/O	RC4	192	O	K7	240	—	VDD

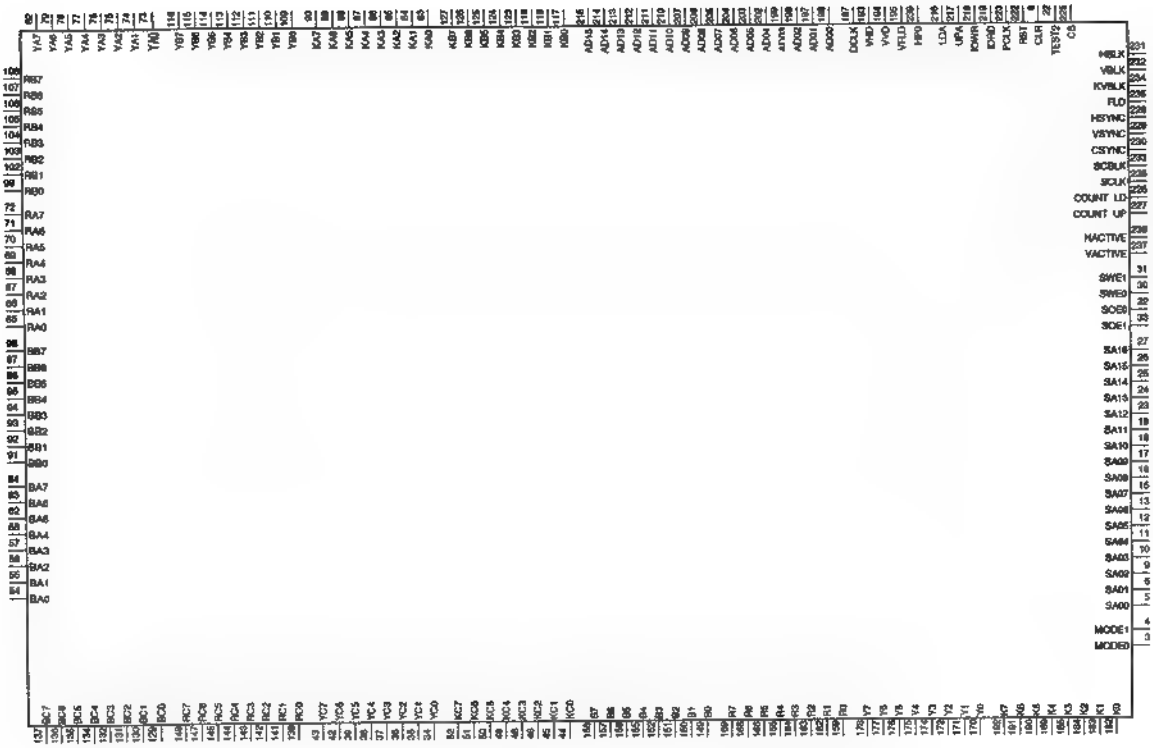

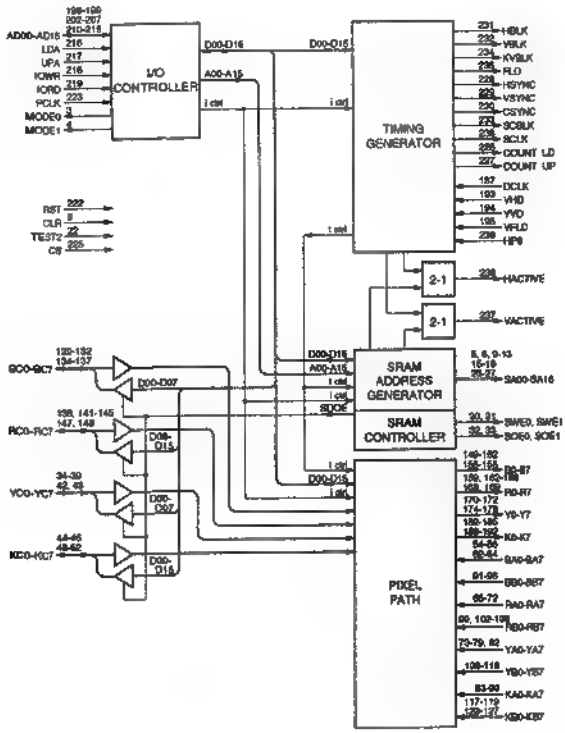
I/O CONTROLLER
TIMING GENERATOR
SRAM ADDRESS GENERATOR
SRAM CONTROLLER
PIXEL PATH
2-1
2-1
HBLK
VBLK
KVBLK
FLD
HSYNC
VSYNC
CSYNC
SCBLK
SCLK
COUNT LD
COUNT UP
DCLK
VHD
YWD
WFLD
HP9
HACTIVE
VACTIVE
SWE0, SWE1
SOE0, SOE1
SA00-SA16
RA0-RA7
RB0-RB7
YA0-YA7
YB0-YB7
KA0-KA7
KB0-KB7
BA0-BA7
BB0-BB7

CXD8613Q (SONY)

C-MOS POLAR COORDINATE CONVERTER

-TOP VIEW-

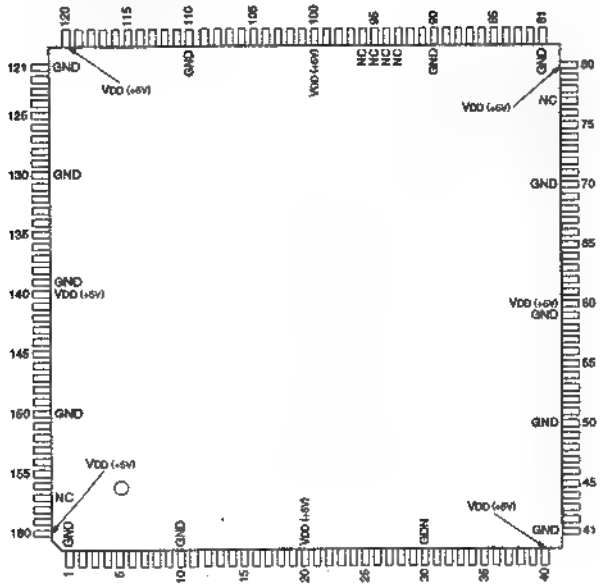

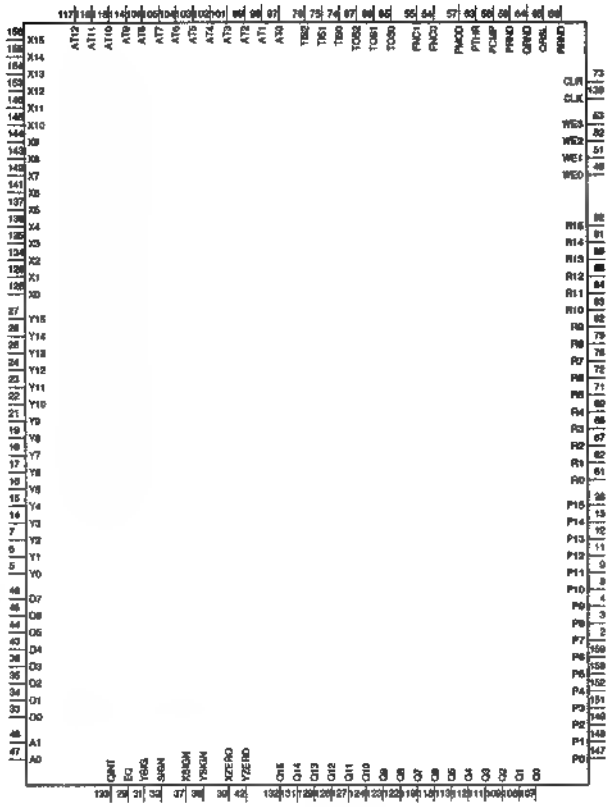

(VDD = +5 V)

PIN NO.	I/O	SIGNAL	PIN NO.	I/O	SIGNAL	PIN NO.	I/O	SIGNAL	PIN NO.	I/O	SIGNAL	PIN NO.	I/O	SIGNAL
1	—	GND	33	I	D0	65	I	QRSL	97	I	AT0	129	O	Q13
2	O	P7	34	I	D1	66	I	RRND	98	I	AT1	130	—	GND
3	O	P8	35	I	D2	67	O	R2	99	I	AT2	131	O	Q14
4	O	P9	36	I	D3	68	O	■	100	—	VDD	132	O	Q15
5	I	Y0	37	O	XSIGN	69	O	R4	101	I	AT3	133	O	QINT
6	I	Y1	38	O	YSIGN	70	—	GND	102	I	AT4	134	I	X2
7	I	Y2	39	O	XZERO	71	■	R6	103	I	AT5	135	I	X3
8	O	P10	40	—	VDD	72	O	R5	104	I	AT6	136	I	X4
9	O	P11	41	—	GND	73	I	CLR	105	I	AT7	137	I	X5
10	—	GND	42	O	YZERO	74	I	TIS0	106	I	AT8	138	I	CLK
11	O	P12	43	I	D4	75	I	TIS1	107	O	Q0	139	—	GND
12	O	P13	44	I	D5	76	I	TIS2	108	O	Q1	140	—	VDD
13	O	P14	45	I	D6	77	—	NC	109	O	Q2	141	I	X6
14	I	Y3	46	I	D7	78	O	R7	110	—	GND	142	I	X7
15	I	Y4	47	I	A0	79	O	R8	111	O	Q3	143	I	X8
16	I	Y5	48	I	A1	80	—	VDD	112	O	Q4	144	I	X9
17	I	Y6	49	I	WE0	81	—	GND	113	O	Q5	145	I	X10
■	I	Y7	50	—	GND	82	O	R9	114	I	AT9	146	I	X11
19	I	Y8	51	I	WE1	83	O	R10	115	I	AT10	147	O	P0
20	—	VDD	52	I	WE2	84	■	R11	116	I	AT11	148	O	■
21	I	Y9	53	I	WE3	85	I	TOS0	117	I	AT12	149	O	■
22	I	Y10	54	I	FNC0	86	I	TOS1	118	O	Q6	150	—	GND
23	I	Y11	55	I	FNC1	87	I	TOS2	119	O	Q7	151	O	P3
24	I	Y12	56	I	PCMP	88	O	R12	120	—	VDD	152	O	P4
■	I	Y13	57	I	PMOD	89	O	R13	121	—	GND	153	I	X12
26	I	Y14	58	I	PRND	90	—	GND	122	O	Q8	154	I	X13
■	I	Y15	59	—	GND	91	O	R14	123	O	Q9	155	I	X14
28	O	P15	60	—	VDD	92	O	R15	124	O	Q10	156	I	X15
29	O	EQ	61	O	R0	93	—	NC	125	I	X0	157	—	NC
30	—	GND	62	O	R1	94	—	NC	126	I	X1	158	O	P5
31	O	YBIG	63	I	PTHR	95	—	NC	127	O	Q11	159	O	P6
32	O	SIGN	64	I	QRND	96	—	NC	128	O	Q12	160	—	VDD

INPUT

A0, A1	; CPU ADDRESS
AT0 - AT12	; NEGATIVE/POSITIVE CONNECTION EXTERNAL ROM DATA
CLK	; CLOCK
CLR	; 0 = XC, YC, PROT, PCNT REGISTER CLEAR
D0 - D7	; CPU DATA
FNC0, FNC1	; FUNCTION SELECT
PCMP	; 1 = AT REGISTER USE
PMOD	; 0 = ROM 8/1 = ROM 13
PRND	; 1 = P ROUND UP NUMBERS OF FIVE AND AVOBE AND ANYTHING UNDER FIVE
PTHR	; 1 = ROM NON-COMPENSATION
QRND	; 1 = Q ROUND UP NUMBERS OF FIVE AND AVOBE AND ANYTHING UNDER FIVE
QRSL	; 0 = Q 8IT-0 ROUND UP NUMBERS OF FIVE AND AVOBE AND ANYTHING UNDER FIVE 1 = Q 8IT-2 ROUND UP NUMBERS OF FIVE AND AVOBE AND ANYTHING UNDER FIVE
RRND	; 1 = R ROUND UP NUMBERS OF FIVE AND AVOBE AND ANYTHING UNDER FIVE
TIS0 - TIS2	; TEST INPUT SELECT
TOS0 - TOS2	; TEST OUTPUT SELECT
WE0 - WE3	; CPU DATA WRITE ENABLE
X0 - X15	; CROSS COORDINATES X SIGNED/UNSIGNED FIXED-POINT WITH 4 BIT FRACTION
Y0 - Y15	; CROSS COORDINATES Y SIGNED/UNSIGNED FIXED-POINT WITH 4 BIT FRACTION

OUTPUT

EQ	; XD = YD : 1
P0 - P15	; POLAR COORDINATES θ ANGLE
Q0 - Q15	; FRACTIONAL PART OF QUOTIENT (EXTERNAL ROM ADDRESS
Q INT	; INTEGRAL PART OF QUOTIENT
R0 - R15	; POLAR COORDINATES Y RADIUS
SIGN	; XD, YD = MINUS : 1
XSIGN	; XD = MINUS : 1
XZERO	; XD = ZERO :1
YBIG	; XD, YD COMPARATE (XD < YD = 1)
YSIGN	; YD = MINUS : 1
YZERO	; YD = ZERO :1

0 ; LOW LEVEL
1 ; HIGH LEVEL

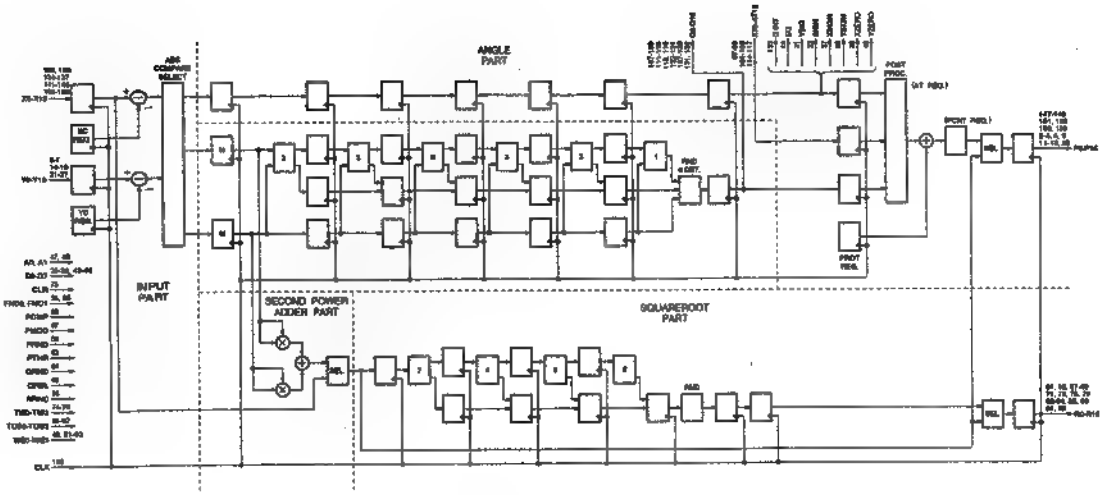

CXD8925Q (SONY)

C-MOS COLOR CORRECT, CHROMA KEY AND LUMINANCE KEY GENERATOR
- TOP VIEW -

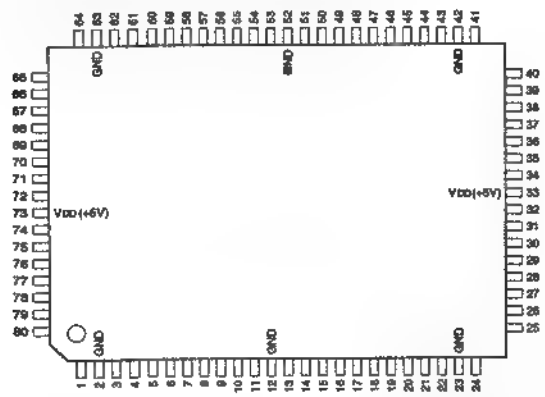

(VDD=+5V)

PIN No.	I/O	SIGNAL	PIN No.	I/O	SIGNAL	PIN No.	I/O	SIGNAL	PIN No.	I/O	SIGNAL
1	I	FMOD	21	O	YQ3	41	O	UVQ1	61	I	D7
2	-	GND	22	O	YQ4	42	-	GND	62	O	LST
3	O	KQ0	23	-	GND	43	O	UVQ2	63	-	GND
4	I	YSL0	24	O	YQ5	44	O	UVQ3	64	I	A0
5	I	YSL1	25	O	YQ6	45	I	LY0	65	I	A1
6	I	UVD0	26	O	YQ7	46	I	LY1	66	I	SC0
7	I	UVD1	27	I	YD0	47	I	LUV0	67	I	SC1
8	I	UVD2	28	I	YD1	48	I	LUV1	68	I	WE0
9	I	UVD3	29	I	YD2	49	I	D0	69	I	WE1
10	O	KQ1	30	I	YD3	50	III	UVQ4	70	I	WE2
11	O	KQ2	31	I	YD4	51	O	UVQ5	71	I	WE3
12	-	GND	32	I	YD5	52	I	GND	72	I	WE4
13	O	KQ3	33	-	VDD	53	O	UVQ6	III	-	VDD
14	O	YQ0	34	I	YD6	54	O	UVQ7	74	I	TSL
15	O	YQ1	35	I	YD7	55	I	III	75	I	CK
16	I	UVD4	36	I	KD	56	I	D2	76	I	LK0
17	I	UVD5	37	I	KM	57	I	D3	77	I	LK1
18	I	UVD6	38	I	CCON	58	I	D4	78	I	LK2
19	I	UVD7	39	I	KINV	59	I	D5	79	I	LK3
20	O	YQ2	40	O	UVQ0	60	I	D6	80	I	TST

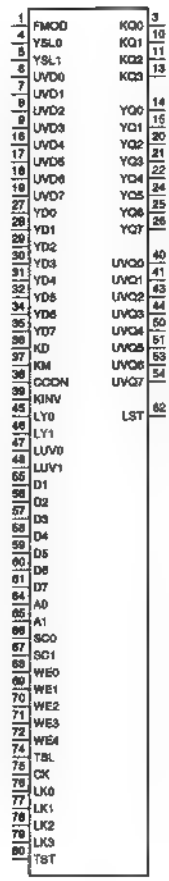

INPUT

A0, A1	; ADDRESS
CCON	; COLOR CORRECTOR ON
CK	; CLOCK
D0-D7	; DATA
FMOD	; FREQUENCY MODE SELECT (L ; 16, H ; 20)
KD	; KEY
KINV	; KEY INVERTER
KM	; KEY MASK
LK0-LK3	; KEY DELAY
LUV0, LUV1	; UV DELAY
LY0, LY1	; Y (LUMINANCE SIGNAL) DELAY
SC0, SC1	; UV DATA CYCLE
TST	; ERROR DETECT DATA SELECT
UVD0-UVD7	; UV DATA
WE0-WE4	; WRITE ENABLE
YD0-YD7	; Y (LUMINANCE SIGNAL)
YSL0, YSL1	; Y SELECT

OUTPUT

KQ0-KQ3	; KEY
LST	; LAST OF UV DATA
UVQ0-UVQ7	; UV DATA
YQ0-YQ7	;Y (LUMINANCE SIGNAL)

CXD8871Q (SONY)

C-MOS MATRIX DATA PROCESSOR

- TOP VIEW -

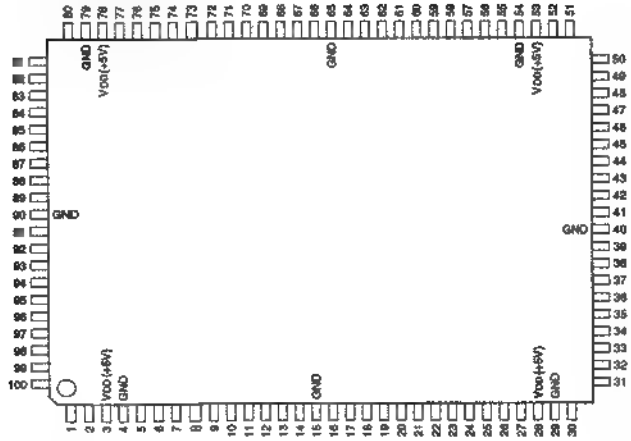

(VDD=+5V)

PIN No.	I/O	SIGNAL	PIN No.	I/O	SIGNAL	PIN No.	I/O	SIGNAL	PIN No.	I/O	SIGNAL
1	I/O	RD02	26	I/O	RD07	51	I/O	RD11	76	I/O	RD15
2	O	KEY0	27	O	KEY6	52	O	MC00	77	O	MC20
3	–	VDD	28	–	VDD	53	–	VDD	78	–	VDD
4	–	GND	29	–	GND	54	–	GND	79	–	GND
5	O	KEY1	30	O	KEY7	55	O	MC01	80	O	MC21
6	I/O	RD20	31	I/O	RD25	56	I/O	RD30	81	I/O	RD34
7	I/O	RD21	32	I/O	RD26	57	I/O	RD31	82	I/O	RD35
8	I/O	RD22	33	I/O	RD27	58	I	WD00	83	I	WD10
9	I	KMS0	34	I	SMH	59	I	WD01	84	I	WD11
10	I	KMS1	35	I	TIT0	60	I	WD02	85	I	WD12
11	I/O	RD03	36	I	TIT1	61	I	WD03	86	I	WD13
12	I/O	RD04	37	I	TIT2	62	I/O	RD12	87	I/O	RD16
13	O	KEY2	38	I	TIT3	63	I/O	RD13	88	I/O	RD17
14	O	KEY3	39	I	WENB	64	O	MC10	89	O	MC30
15	–	GND	40	–	GND	65	–	GND	90	–	GND
16	O	KEY4	41	I	CK	66	O	MC11	91	O	MC31
17	O	KEY5	42	I	PAY0	67	I/O	RD32	92	I/O	RD36
18	I/O	RD23	43	I	PAY1	68	I/O	RD33	93	I/O	RD37
19	I/O	RD24	44	I	PAY2	69	I	WD04	94	I	WD14
20	I	PAM	45	I	PAY3	70	I	WD05	95	I	WD15
21	I	CAX	46	I	PER0	71	I	HAR	96	I	RENB
22	I	CAY	47	I	PER1	72	I	SEL	97	I	WD16
23	I	TSW	48	I	PER2	73	I	WD06	98	I	WD17
24	I/O	RD05	49	I	PER3	74	I	WD07	99	I/O	RD00
25	I/O	RD06	50	I/O	RD10	75	I/O	RD14	100	I/O	RD01

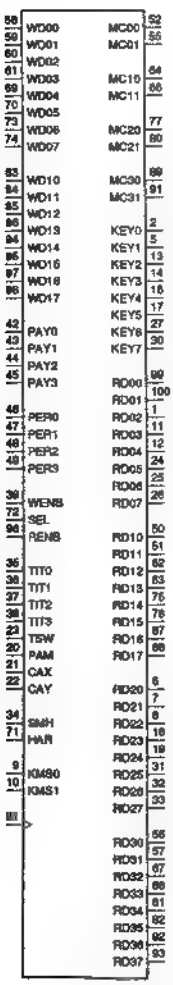

INPUT

CAX	; X SELECT AT COUNTER ADDRESS MODE
CAY	; Y SELECT AT COUNTER ADDRESS MODE
CL	; SYSTEM CLOCK
HAR	; MATRIX SET (AT SMH=H) EFFECTIVE AREA L=DATA SET ON H LEVEL, H=DATA SET ON L LEVEL
KMS1, KMS0	; LINEAR KEY MODE SELECT 0=FFH, 1=00H, 2=LINEAR KEY, 3=TURN OVER KEY
PAM	; ADDRESS MODE SELECT L=OPERATOR, H=COUNTER
PAY3-PAY0	; MATRIX DATA SELECT (4 BIT TO 2 BIT)
PER3-PER0	; MATRIX DATA OPERATION ERROR DATA H=ERROR, MATRIX DATA SET TO L LEVEL
RENB	; LATCH ENABLE FOR RD0, RD1, RD2 AND RD3
SEL	; READ/WRITE SWITCHING FOR I/O BUFFER L=RD0 AND RD1 ON READ, RD2 AND RD3 ON WRITE H=RD2 AND RD3 ON READ, RD0 AND RD1 ON WRITE
SMH	; MATRIX SET L=NORMALLY OPERATION H=DATA SET ON H LEVEL
TIT3-TIT0	; TITLE SIGNALS H=TITLE (MATRIX DATA CHANGE 11 TO 01)
TSW	; TITLE SWITCH L=TITLE ON, H=TITLE OFF
WD07-WD00	; WRITE DATA TO MEMORY (MATCH FOR RD0 AND RD2)
WD17-WD10	; WRITE DATA TO MEMORY (MATCH FOR RD1 AND RD3)
WENB	; LATCH ENABLE FOR WD0 AND WD1

OUTPUT

KEY7-KEY0	; LINEAR KEY FOR SOFT EDGE
MC01-MC00	; BLOCK 0 (LEFT UPPER) MATRIX DATA
MC11-MC10	; BLOCK 1 (RIGHT UPPER) MATRIX DATA
MC21-MC20	; BLOCK 2 (LEFT LOWER) MATRIX DATA
MC31-MC30	; BLOCK 3 (RIGHT LOWER) MATRIX DATA

INPUT/OUTPUT

RD07-RD00, RD17-RD10, RD27-RD20, RD37-RD30
; READ DATA INPUTS, WRITE DATA OUTPUTS

SEL	RD0	RD1	RD2	RD3	MC & KEY
0	Hi-Z	Hi-Z	WD0 OUT	WD1 OUT	FROM RD0, RD1
1	WD0 OUT	WD1 OUT	Hi-Z	Hi-Z	FROM RD2, RD3

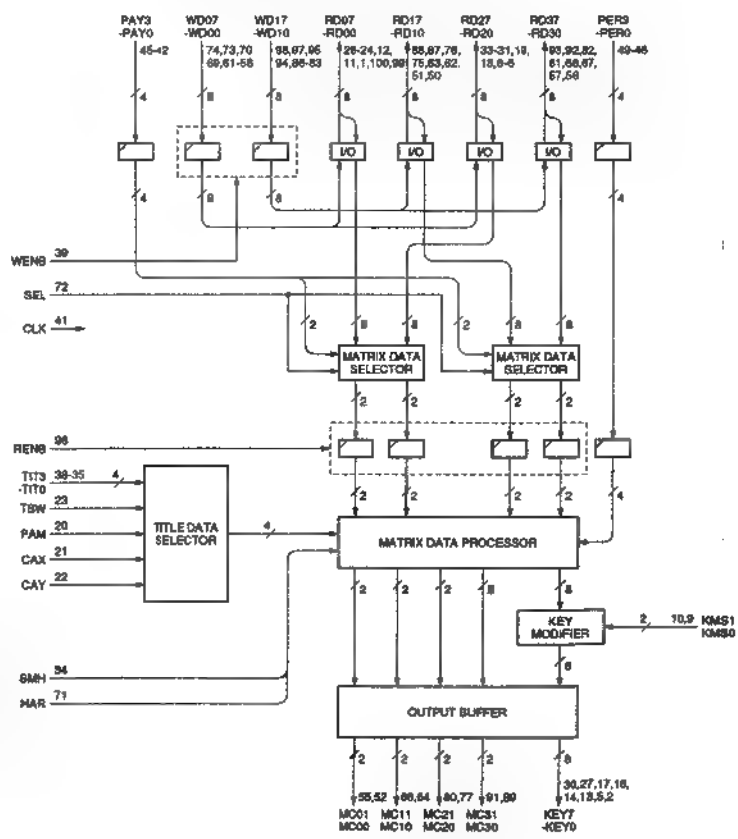

CXD8878Q (SONY)

TRIPLE DIGITAL MIX EFFECT

-TOP VIEW-

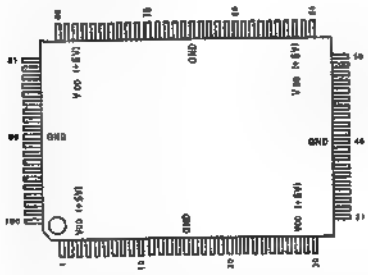

(Vss=+5V)

PIN No.	I/O	SIGNAL	PIN No.	I/O	SIGNAL	PIN No.	I/O	SIGNAL	PIN No.	I/O	SIGNAL
1	I	CP0	26	I	C15/A15	51	I	C21/A21	76	I	B24
2	I	B00	27	I	C17/A17	52	I	C23/A23	77	I	B25
3	-	Vss	28	-	Vss	53	-	Vss	78	-	Vss
4	I	B01	29	I	C0	54	I	C25/A25	79	I	B26
5	I	B02	30	I	M1	55	I	C24/A24	80	I	B27
6	I	B03	31	I	CE	56	I	C26/A26	81	I	A00
7	I	B04	32	I	CP1	57	I	C26/A26	82	I	A01
8	I	B05	33	I	B10	58	I	C27/A27	83	I	A02
9	I	B06	34	I	B11	59	I	DL	84	I	A03
10	I	B07	35	I	B12	60	I	M2	85	I	A04
11	O	R00	36	O	R10	61	O	R20	86	I	A05
12	O	R01	37	O	R11	62	O	R21	87	I	A06
13	O	R02	38	O	R12	63	O	R22	88	I	A07
14	O	R03	39	O	R13	64	O	R23	89	I	AE
15	-	GND	40	-	GND	65	-	GND	90	-	GND
16	O	R04	41	O	R14	66	O	R24	91	I	CLK
17	O	R05	42	O	R15	67	O	R25	92	I	C00
18	O	R06	43	O	R16	68	O	R26	93	I	C01
19	O	R07	44	O	R17	69	O	R27	94	I	C02
20	I	C10/A10	45	I	B13	70	I	B00	95	I	C03
21	I	C11/A11	46	I	B14	71	I	CP2	96	I	C04
22	I	C12/A12	47	I	B15	72	I	B20	97	I	C05
23	I	C13/A13	48	I	B16	73	I	B21	98	I	C06
24	I	C14/A14	49	I	B17	74	I	B22	99	I	C07
25	I	C15/A15	50	I	C20/A20	75	I	B23	100	I	B001

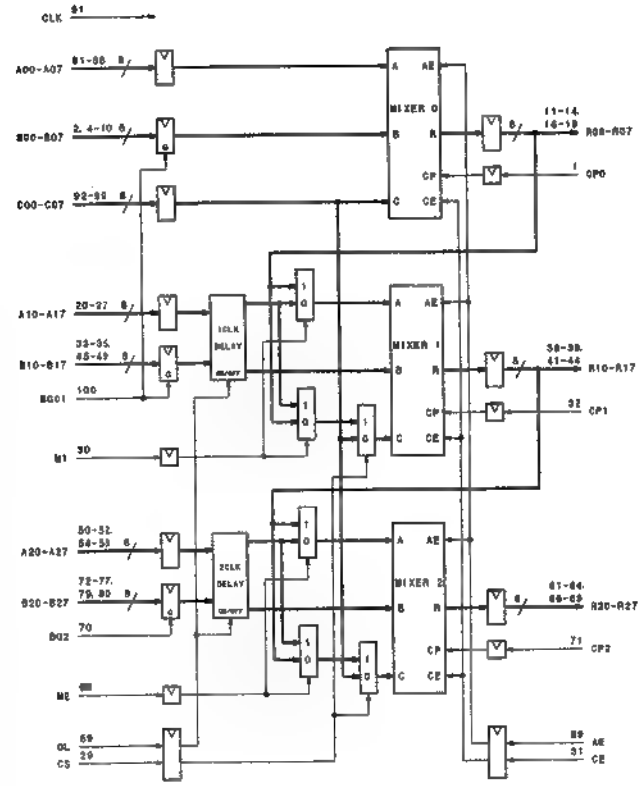

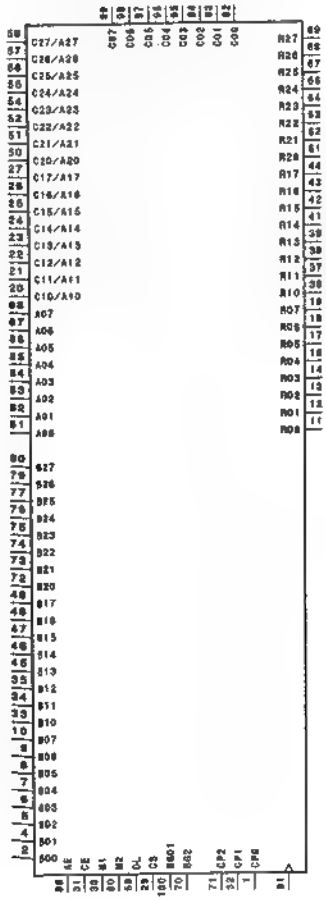

INPUT

A00-A07	:A0 DATA (8 BIT)
A10-A17	:A1 DATA (8 BIT)
A20-A27	:A2 DATA (8 BIT)
AE	:ENABLE FOR A DATA
B00-B07	:B0 DATA (8 BIT)
B10-B17	:B1 DATA (8 BIT)
B20-B27	:B2 DATA (8 BIT)
B001	:INPUT HOLD FOR B0 and B1
B02	:INPUT HOLD SIGNAL FOR B2
C00-C07	:C0 DATA (8 BIT)
CE	:ENABLE FOR C DATA
CLK	:CLOCK
CS	:CHIP SELECT
CP0	:CONTROL PULSE FOR C DATA (at #MIXER0)
CP1	:CONTROL PULSE FOR C DATA (at #MIXER1)
CP2	:CONTROL PULSE FOR C DATA (at #MIXER2)
DL	:DELAY CONTROL
M1	:MIXER MODE FOR #MIXER1
M2	:MIXER MODE FOR #MIXER2

OUTPUT

R00-R07	:R0 DATA (8 BIT)
R10-R17	:R1 DATA (8 BIT)

Notice *)

MIXER0 : R0=C0×A0+ (1-C0) ×B0

MIXER1 : R1=C1×A1+ (1-C1) ×B1

MIXER2 : R0=C2×A2+ (1-C2) ×B2

CXK58257AM-10LLT6 (SONY)

C-MOS 256K (32768x8)-BIT STATIC RAM
—TOP VIEW—

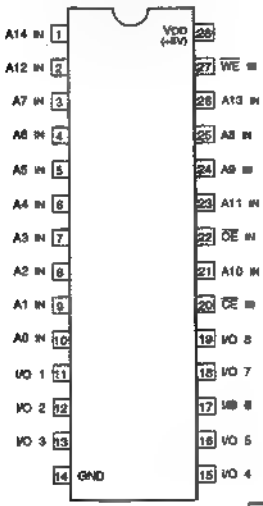

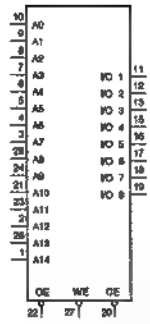

A0-A14 ; ADDRESS INPUTS
$\overline{CE}$; CHIP ENABLE INPUT
I/O1-I/O8 ; DATA INPUTS/OUTPUTS
$\overline{OE}$; OUTPUT ENABLE INPUT
$\overline{WE}$; WRITE ENABLE INPUT

$\overline{CE}$	$\overline{OE}$	$\overline{WE}$	MODE	I/O TERMINAL
1	X	X	NOT SELECT	HIGH IMPEDANCE
0	1	1	OUTPUT DISABLE	HIGH IMPEDANCE
0	0	1	READ	OUTPUT DATA
0	X	0	WRITE	INPUT DATA

0 ; LOW LEVEL
1 ; HIGH LEVEL
X ; DON'T CARE

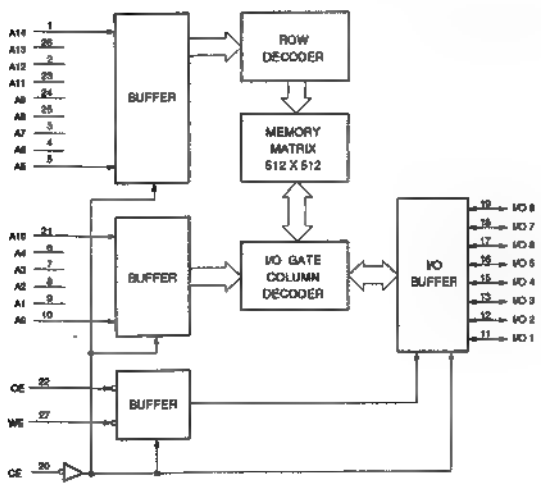

CXD8872Q (SONY)

C-MOS ADDRESS ARITHMETIC PROCESSOR FOR 2D EFECT
- TOP VIEW -

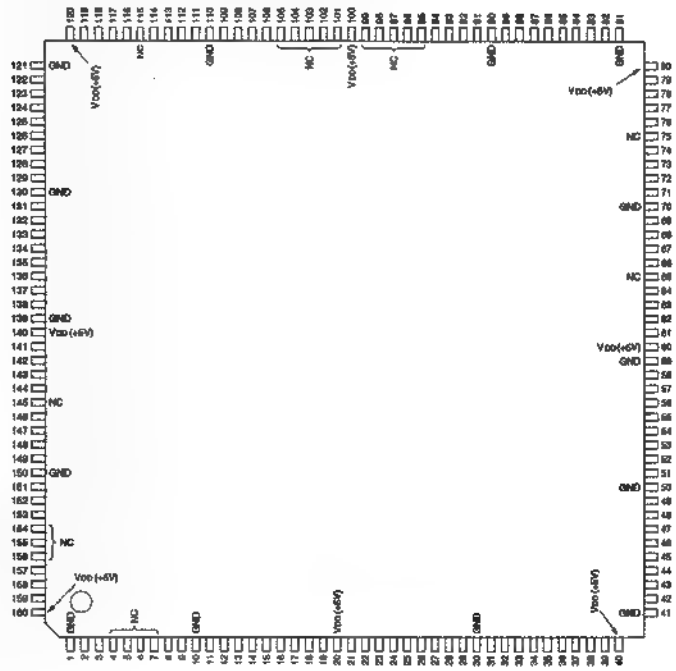

(VDD=+5V)

PIN No.	I/O	SIGNAL	PIN No.	I/O	SIGNAL	PIN No.	I/O	SIGNAL	PIN No.	I/O	SIGNAL
1	–	GND	41	–	GND	81	–	GND	121	–	GND
2	O	ER1	42	I	CK	82	O	XB11	122	O	YA3
3	O	ER0	43	I	A4	83	■	XB10	123	O	YA2
4	–	NC	44	I	A3	84	O	XB9	124	O	YA1
5	–	NC	45	I	A2	85	O	XB8	125	■	YA0
6	–	NC	46	I	A1	86	O	XB7	126	O	YB15
7	–	NC	47	O	XSMPL	87	■	XB6	127	■	YB14
8	I	CE	48	I	XAHLD	88	O	XB5	128	O	YB13
9	I	CDM	49	I	XBHLD	89	O	XB4	129	■	YB12
10	–	GND	50	–	GND	90	–	GND	130	–	GND
11	I	C5	51	O	XAER	91	■	XB3	131	O	YB11
12	I	■	52	O	XBER	92	■	XB2	132	O	YB10
13	I	C3	53	I	XAOE	93	O	XB1	133	■	YB9
14	I	C2	54	I	XBOE	94	■	XB0	134	O	YB8
15	I	C1	55	O	XA15	95	–	NC	135	■	YB7
16	I	C0	56	O	XA14	96	–	NC	136	■	YB6
17	I	D15	57	O	XA13	97	–	NC	137	O	YB5
18	I	D14	58	O	XA12	98	–	NC	138	■	YB4
19	I	D13	■	–	GND	99	–	NC	139	–	GND
20	–	VDD	60	–	VDD	100	–	VDD	140	–	VDD
21	I	D12	61	O	XA11	101	–	NC	141	O	YB3
■	I	D11	62	O	XA10	102	–	NC	142	O	YB2
23	I	D10	63	O	XA9	103	–	NC	143	O	YB1
24	I	D9	64	O	XA8	104	–	NC	144	■	YB0
25	I	D8	65	–	NC	105	–	NC	145	–	NC
26	I	D7	66	O	XA7	106	O	YA15	146	I	YAOE
27	I	D6	67	O	XA6	107	O	YA14	147	I	YBOE
28	I	D5	68	O	XA5	108	O	YA13	148	O	YAER
29	I	D4	69	O	XA4	109	■	YA12	149	O	YBER
30	–	GND	70	–	GND	110	–	GND	150	–	GND
31	I	TST	71	O	XA3	111	O	YA11	151	I	YAHLD
32	I	■	72	O	XA2	112	O	YA10	152	I	YBHLD
33	I	■	73	■	XA1	113	O	YA9	153	O	YSMPL
34	I	D1	74	O	XA0	114	■	YA8	154	–	NC
35	I	D0	75	–	NC	115	–	NC	155	–	NC
36	I	WE2	76	O	XB15	116	■	YA7	156	–	NC
37	I	WE1	77	O	XB14	117	O	YA6	157	I	EROE
38	I	WE0	78	■	XB13	118	O	YA5	158	■	ER3
39	I	CLR	79	O	XB12	119	O	YA4	159	■	ER2
40	–	VDD	■	–	VDD	120	–	VDD	160	–	VDD

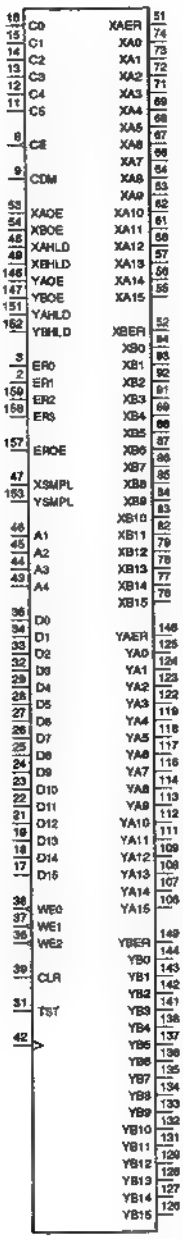

INPUT

A1-A4	; ADDRESS
C0-C5	; FP (FRONT PROCESSOR) CONTROL COMMAND
CE	; FP (FRONT PROCESSOR) CONTROL COMMAND ENABLE
CK	; CLOCK
CLR	; CLEAR
CMD	; COMMAND GENERATION MODE SELECT (L : INTERFACE MODE, H : DIRECT MODE)
D0-D15	; DATA
TST	; IC TEST
WE0-WE2	; WRITE ENABLE

OUTPUT

XA0-XA15	; XA PORT DATA
XAER	; XA PORT STATUS
XAHLD	; XA PORT OUTPUT HOLD (H : HOLD)
XAOE	; XA PORT OUTPUT ENEBLER (H : HIGH IMPEDANCE)
XB0-XB15	; XB PORT DATA
XBER	; XB PORT STATUS
XBHLD	; XB PORT OUTPUT HOLD (H : HOLD)
XBOE	; XB PORT OUTPUT ENEBLER (H : HIGH IMPEDANCE)
XSMPL	; ADDRESS SAMPLING SIGNAL OF HORIZONTAL DIRECTION
YA0-YA15	; YA PORT DATA
YAER	; YA PORT STATUS
YAHLD	; YA PORT OUTPUT HOLD (H : HOLD)
YAOE	; YA PORT OUTPUT ENEBLER (H : HIGH IMPEDANCE)
YB0-YB15	; YB PORT DATA
YBER	; YB PORT STATUS
YBHLD	; YB PORT OUTPUT HOLD (H : HOLD)
YBOE	; YB PORT OUTPUT ENEBLER (H : HIGH IMPEDANCE)
YSMPL	; ADDRESS SAMPLING SIGNAL OF VERTICAL DIRECTION

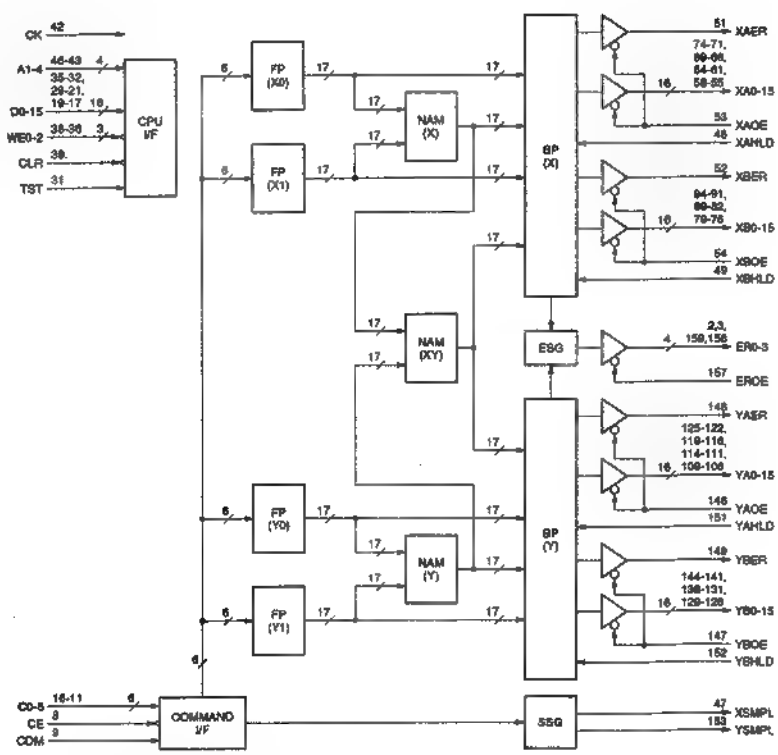

BP	; BACK PROCESSOR
COMMAND I/F	; COMMAND INTERFACE
CPU I/F	; CPU INTERFACE
ESG	; ERROR STATUS GENERATOR
FP	; FRONT PROCESSOR
NAM	; NON ADDITIVE MIX
SSG	; SAMPLING SIGNAL GENERATOR

CXD8879Q (SONY)

C-MOS MEMORY CONTROLLER FOR FRAME SYNCHRONIZER

- TOP VIEW -

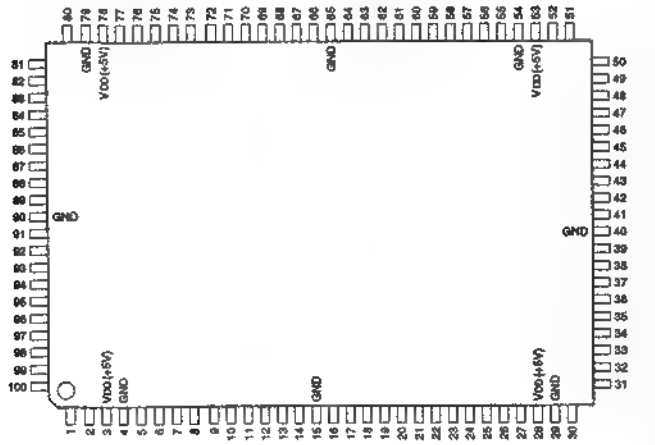

(VDD=+5V)

PIN No.	I/O	SIGNAL	PIN No.	I/O	SIGNAL	PIN No.	I/O	SIGNAL	PIN No.	I/O	SIGNAL
1	O	OY2	26	I/O	IU2/OU2	51	I	D3	76	O	BEN1O
2	O	OY3	27	I/O	IU3/OU3	52	I	D2	77	■	BEN1E
3	–	VDD	28	–	VDD	53	–	VDD	78	–	VDD
4	–	GND	29	–	GND	■	–	GND	79	–	GND
5	■	OY4	30	I/O	IU4/OU4	55	I	D1	80	O	AEN1O
6	O	OY5	31	I/O	IU5/OU5	56	I	D0	81	O	AEN1E
7	O	OY6	32	I/O	IU6/OU6	57	L	HD	82	O	INC1
8	O	OY7	33	I/O	IU7/OU7	58	I	VD	83	O	HCLR1
9	I	YDL2	34	I	IV4/IC4	59	I	FLD	84	O	VCLR1
10	I	YDL3	35	I	IV5/IC5	60	O	OLD2	85	I	BLK
11	O	OC0/OV0	36	I	IV6/IC6	■	O	AUX2	86	I	KS
12	O	OC1/OV1	37	I	IV7/IC7	62	O	INH2	87	I	IK
13	O	OC2/OV2	38	I	■	63	O	BEN2O	88	I	IY0
14	O	OC3/OV3	39	I	MOD	64	O	BEN2E	89	I	IY1
15	–	GND	40	–	GND	65	–	GND	90	–	GND
16	O	OC4/OV4	41	I	CK	66	O	AEN2O	91	I	IY2
17	O	OC5/OV5	42	I	ILD	67	O	AEN2E	92	I	IY3
18	O	OC6/OV6	43	I	WE2	68	O	INC2	93	I	IY4
19	O	OC7/OV7	44	I	WE1	■	O	HCLR2	94	I	IY5
20	I	IV0/IC0	45	I	A1	70	O	VCLR2	95	I	IY6
21	I	IV1/IC1	46	I	A0	71	I	TST	96	I	IY7
22	I	IV2/IC2	47	I	D7	72	I	CLR	97	I	YDL0
23	I	IV3/IC3	48	I	D6	73	O	OLD1	98	I	YDL1
24	I/O	IU0/OU0	49	I	D5	74	O	AUX1	99	O	OY0
25	I/O	IU1/OU1	50	I	D4	75	■	INH1	100	O	OY1

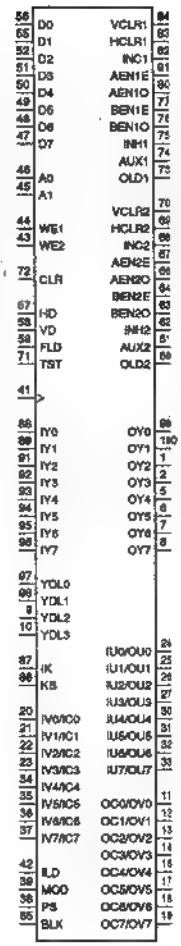

INPUT

A0, A1	; ADDRESS BUS
BLK	; BLANKING
CK	; CLOCK
CLR	; CLEAR
D0-D7	; DATA BUS
FLD	; FIELD (L ; EVEN, H ; ODD)
HD	; HOLIZONTAL SYNCHRONIZED
IK	; 1 BIT KEY
ILD	; LOAD
IV0/IC0-IV7/IC7	; PARALLEL DATA INPUT OF V DATA AT PARALLEL-SERIAL MODE, SERIAL DATA INPUT OF UV DATA AT SERIAL-PARALLEL MODE.
IY0-IY7	; Y DATA BUS
KS	; KEY SELECT
MOD	; MODE SELECT (L ; 4:1:1 MODE, H ; 4:2:2 MODE)
PS	; PARALLEL-SERIAL / SERIAL-PARALLEL SELECT (L ; S → P, H ; P → S)
TST	; TEST
VD	; VERTICAL SYNCHRONIZED
WE1, WE2	; WRITE ENABLE
YDL0-YDL3	; Y DATA DELAY

OUTPUT

AEN1E, AEN2E	; A CH EVEN FIELD ENABLE
BEN1E, BEN2E	; B CH EVEN FIELD ENABLE
AEN1O, AEN2O	; A CH ODD FIELD ENABLE
BEN1O, BEN2O	; B CH ODD FIELD ENABLE
AUX1, AUX2	; MODE 0,1 ; MSB (AUX BIT) OUTPUT OF MD 1-2 REGISTER. MODE 2 ; HIGH BIT OUTPUT OF LOAD COUNTER. MODE 3 ; H LEVEL OUTPUT OF LINE NUMBER SET AT VC1-2 REGISTER EVERY V RESET. H LEVEL OUTPUT AT ALL TIMES WHEN VC1-2=0.
HCLR1, HCLR2	; HOLIZONTAL CLEAR
INC1, INC2	; LINE INCREMENT
INH1, INH2	; INHIBIT
OC0/OV0-OC7/OV7	; SERIAL DATA OUTPUT OF UV DATA AT PARALLEL-SERIAL MODE, PARALLEL DATA OUTPUT OF V DATA AT SERIAL-PARALLEL MODE.
OLD1, OLD2	; MODE 0 ; L LEVEL WHEN LOAD COUNTER OUTPUT IS 0 AT LOAD SIGNAL FOR 4:1:1 MODE OF UV DATA CONVERTER. MODE 1,2 ; LOW BIT OUTPUT OF LOAD COUNTER AT LOAD SIGNAL FOR 4:2:2 MODE OF UV DATA CONVERTER. MODE 3 ; H LEVEL OUTPUT OF CLOCK NUMBER SET AT LD1-2 REGISTER EVERY H RESET. H LEVEL OUTPUT AT ALL TIMES WHEN LD1-2=0. H LEVEL OUTPUT WHEN AUX1-2 (MODE 3) IS H LEVEL.
OY0-OY7	; Y DATA BUS
VCLR1, VCLR2	; VERTICAL CLEAR

INPUT/OUTPUT

IU0/OU0-IU7/OU7	; SERIAL DATA OUTPUT OF U DATA AT PARALLEL-SERIAL MODE, PARALLEL DATA OUTPUT OF U DATA AT SERIAL-PARALLEL MODE.

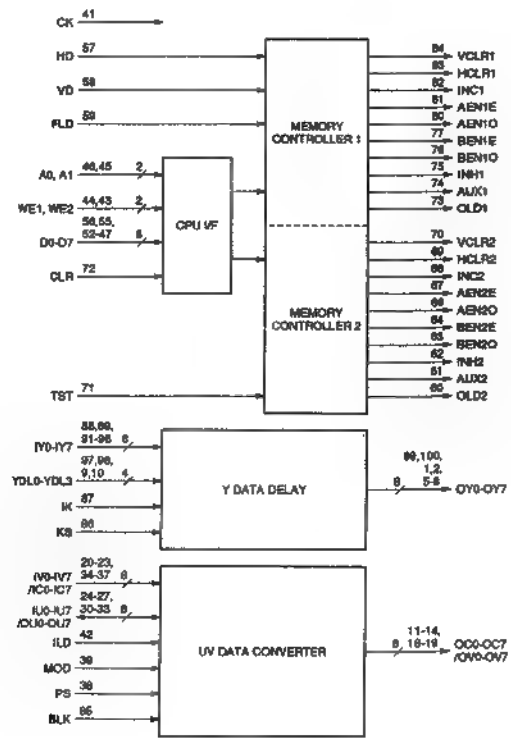

CXD8890Q (SONY)

KEY SIGNAL PROCESSOR

-TOP VIEW-

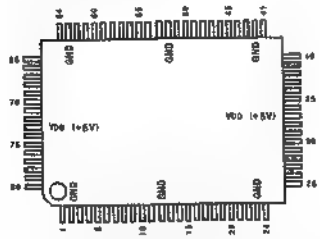

(V DD=+5V)

PIN No.	I/O	SIGNAL	PIN No.	I/O	SIGNAL	PIN No.	I/O	SIGNAL	PIN No.	I/O	SIGNAL
1	I	CLK	21	I	BK5	41	O	OK10	61	O	OK3
2	–	GND	22	I	BK6	42	–	GND	62	O	OK2
3	I	AK4	23	–	GND	43	O	OK9	63	–	GND
4	I	AK5	24	I	BK7	44	O	OK8	64	O	OK1
5	I	AK6	25	I	BK8	45	I	D14	65	O	OK0
6	I	AK7	26	I	BK9	46	I	D13	66	I	D3
7	I	AK8	27	I	BK10	47	I	D12	67	I	D2
8	I	AK9	28	I	BK11	48	I	D11	68	I	D1
9	I	AK10	29	I	BK12	49	I	D10	69	I	D0
10	I	AK11	30	I	BK13	50	I	OK7	70	I	VD
11	I	AK12	31	I	BK14	51	O	OK6	71	I	HD
12	–	GND	32	I	BK15	52	–	GND	72	I	TST
13	I	AK13	33	–	VDD	53	O	OK5	73	–	VDD
14	I	AK14	34	I	MSK	54	O	OK4	74	I	CLR
15	I	AK15	35	I	WE1	55	I	D9	75	I	OE1
16	I	BK0	36	I	WE0	56	I	D8	76	I	OE2
17	I	BK1	37	I	A2	57	I	D7	77	I	AK0
18	I	BK2	38	I	A1	58	I	D6	78	I	AK1
19	I	BK3	39	I	D15	59	I	D5	79	I	AK2
20	I	BK4	40	O	OK11	60	I	D4	80	I	AK3

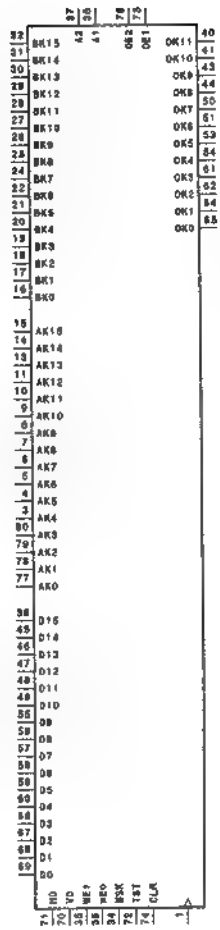

INPUT

A1	:ADDRESS ZEXP0
A2	:ADDRESS ZEXP1
AK0–AK15	:AK DATA (16 BIT)
BK0–BK15	:BK DATA (16 BIT)
CLK	:CLOCK
CLR	:CLEAR
D0–D15	:DATA (16 BIT)
HD	:HD SIGNAL
MSK	:EXTERNAL MASK
OE1	:OUTPUT ENABLE (+)
OE2	:OUTPUT ENABLE (–)
TST	:TEST TERMINAL
VD	:VD SIGNAL
WE0	:WRITE ENABLE 0
WE1	:WRITE ENABLE 1

OUTPUT

OK0–OK11	:KEY SIGNAL OUTPUT (12 BIT)

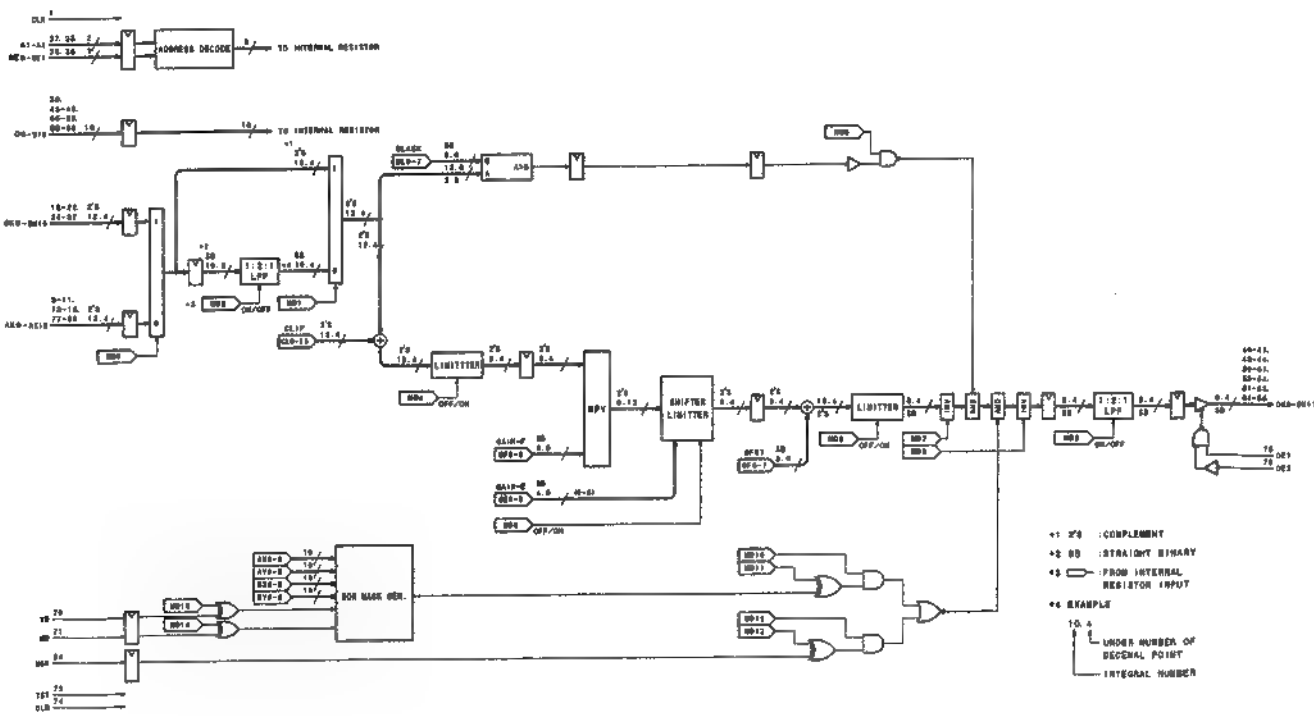

CXD8926Q (SONY)

C-MOS CHROMA KEY PROCESSOR

- TOP VIEW -

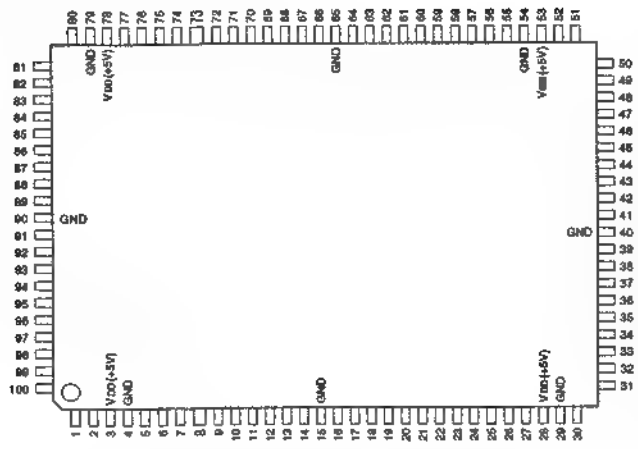

(VDD=+5V)

PIN No.	I/O	SIGNAL	PIN No.	I/O	SIGNAL	PIN No.	I/O	SIGNAL	PIN No.	I/O	SIGNAL
1	O	UVQ1	26	O	CRK5	51	■	YQ4	76	O	ARA
2	O	UVQ2	27	O	CRK6	52	■	YQ5	77	■	CAUX
3	–	VDD	28	–	VDD	53	–	VDD	78	–	VDD
4	–	GND	29	–	GND	54	–	GND	79	–	GND
5	O	UVQ3	30	O	CRK7	55	O	YQ6	80	I	CLK
6	O	UVQ4	31	O	CRK8	■	■	YQ7	81	I	TST
7	O	UVQ5	32	O	CRK9	57	O	LMK0	82	I	TSL
8	I	UVD4	33	I	YD4	58	I	D4	83	I	LKON
9	I	UVD5	34	I	YD5	59	I	D5	84	I	CKON
10	I	UVD6	35	I	YD6	60	I	D6	85	I	FYN
11	I	UVD7	36	I	YD7	61	I	D7	86	I	FUVN
12	O	UVQ6	37	O	SCQ0	62	O	LMK1	■	O	CSR
13	O	UVQ7	38	O	SCQ1	63	O	LMK2	88	O	CSR2
14	■	CRK0	39	O	AUX	64	O	LMK3	89	O	FYR
15	–	GND	40	–	GND	65	–	GND	90	–	GND
16	O	CRK1	41	O	YQ0	66	O	LMK4	■	O	FUVR
17	O	CRK2	42	O	YQ1	67	O	LMK5	92	O	FW1
18	O	CRK3	43	O	YQ2	68	O	LMK6	93	O	FW2
19	I	FMOD	44	I	SC0	69	I	A0	94	I	VD
20	I	CLR	45	I	SC1	70	I	A1	95	I	HD
21	I	YD0	46	I	D0	71	I	WE0	96	I	UVD0
22	I	YD1	47	I	D1	72	I	WE1	97	I	UVD1
23	I	YD2	48	I	D2	73	I	WE2	98	I	UVD2
24	I	YD3	49	I	D3	74	I	WE3	99	I	UVD3
25	O	CRK4	50	O	YQ3	75	O	LMK7	100	O	UVQ0

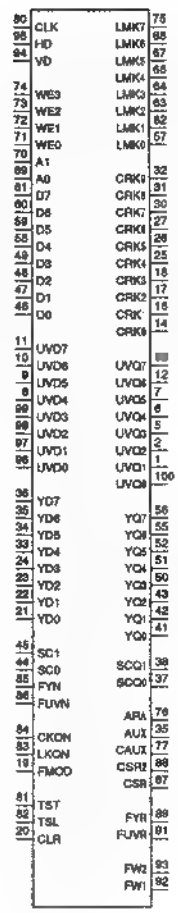

INPUT

A0, 1	; ADDRESS DATA
CKON	; CHROMA KEY ON
CLK	; CLOCK
CLR	; CLEAR
D0-7	; CPU DATA
FMOD	; UV SAMPLING FREEQUENCY
FUVN	; UV FIFO NEXT DATA REQUEST (*1)
FYN	; Y FIFO NEXT DATA REQUEST (*1)
HD	; H SYNC
LKON	; LUMINANCE KEY ON
SC0, 1	; CYCLE
TSL	; TEST POINT SELECT
TST	; TEST
UVD0-7	; UV DATA
WE0-3	; WRITE ENABLE
YD	; Y
YD0-7	; Y DATA
VD	; V SYNC

OUTPUT

ARA	; CURSOR AREA
AUX	; AUX BIT DATA
CAUX	; CSR AND CAUX BIT OR OUTPUT
CRK0-9	; CHROMA KEY
CSR	; CURSOR
CSR2	; CSR 2 CLOCK DELAY
FUVR	; UV FIFO READ ENABLE (*1)
FW1	; FIFO WRITE ENABLE (*1)
FW2	; FIFO WRITE ENABLE (WITH DELAY) (*1)
FYR	; Y FIFO READ ENABLE (*1)
LMK0-7	; LUMINANCE KEY
SCQ0, 1	; CYCLE
UVQ0-7	; UV DATA
YQ0-7	; Y DATA

NOTE

*1 FIFO ; FIRST ■ FIRST OUT

CXD8927Q (SONY)

C-MOS LINEAR INTERPOLATION ARITHMETIC

- TOP VIEW -

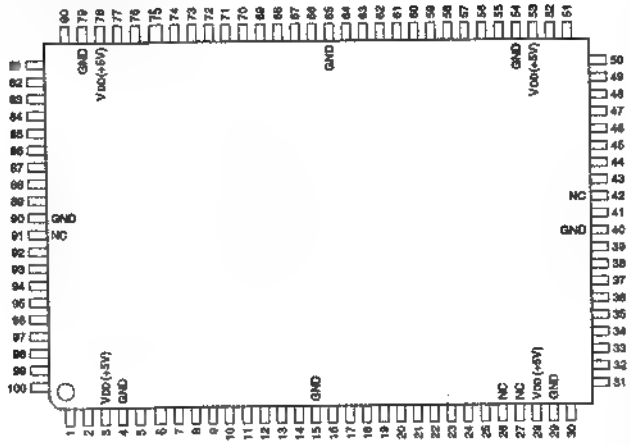

(VDD=+5V)

PIN No.	I/O	SIGNAL	PIN No.	I/O	SIGNAL	PIN No.	I/O	SIGNAL	PIN No.	I/O	SIGNAL
1	I	WE	26	–	NC	51	I	D21	76	I	M20
2	I	LHS	27	–	NC	52	I	D22	77	I	M21
3	–	VDD	28	–	VDD	53	–	VDD	78	–	VDD
4	–	GND	29	–	GND	54	–	GND	79	–	GND
5	O	Q0	30	O	Q3	55	O	Q4	80	O	Q7
6	I	CD0	31	I	D00	56	I	D23	81	I	M30
7	I	CD1	32	I	D01	57	I	D24	82	I	M31
8	I	CD2	33	I	D02	58	I	D25	83	I	XC0
9	I	CD3	34	I	D03	59	I	D26	84	I	XC1
10	I	CD4	35	I	D04	60	I	D27	85	I	XC2
11	I	CD5	36	I	D05	61	I	D30	86	I	XC3
12	I	CD6	37	I	D06	62	I	D31	87	I	XC4
13	I	CD7	38	I	D07	63	I	D32	88	I	YC0
14	O	Q1	39	I	D10	64	O	Q5	89	I	YC1
15	–	GND	40	–	GND	65	–	GND	90	–	GND
16	O	Q2	41	I	CK	66	O	Q6	91	–	NC
17	I	CD8	42	–	NC	67	I	D33	92	I	YC2
18	I	CD9	43	I	D11	68	I	D34	93	I	YC3
19	I	CD10	44	I	D12	69	I	D35	94	I	YC4
20	I	CD11	45	I	D13	70	I	D36	95	I	XC
21	I	CD12	46	I	D14	71	I	D37	96	I	YC
22	I	CD13	47	I	D15	72	I	M00	97	I	PC
23	I	CD14	48	I	D16	73	I	M01	98	I	A0
24	I	CD15	49	I	D17	74	I	M10	99	I	A1
25	I	TST	50	I	D20	75	I	M11	100	I	A2

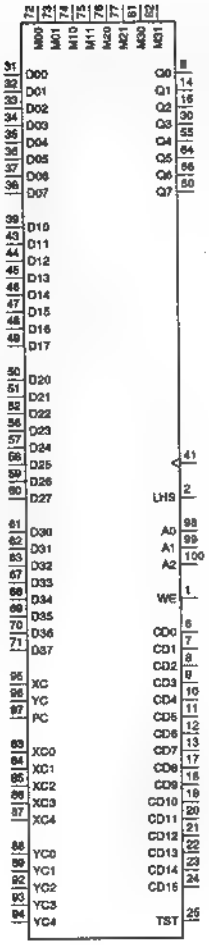

INPUT

A0-A2	; REGISTER SELECT ADDRESS
CD0-CD15	; WRITE DATA TO REGISTER
CK	; SYSTEM CLOCK
D00-D07	; IMAGE DATA (X : EVEN, Y : EVEN)
D10-D17	; IMAGE DATA (X : ODD, Y : EVEN)
D20-D27	; IMAGE DATA (X : EVEN, Y : ODD)
D30-D37	; IMAGE DATA (X : ODD, Y : ODD)
LHS	; REGISTER ASSIGN ADDRESS CHANGE
M00, M01	; CONTROL BIT (X : EVEN, Y : EVEN)
M10, M11	; CONTROL BIT (X : ODD, Y : EVEN)
M20, M21	; CONTROL BIT (X : EVEN, Y : ODD)
M30, M31	; CONTROL BIT (X : ODD, Y : ODD)
PC	; IMAGE DATA PROCESSING MODE SELECTOR
TST	; TEST
WE	; WRITE ENABLE FOR REGISTER
XC	; X DATA SELECT FOR NON PROCESSING IMAGE
XC0-XC4	; X DIRECTION INTERPOLATION DATA
YC	; Y DATA SELECT FOR NON PROCESSING IMAGE
YC0-YC4	; Y DIRECTION INTERPOLATION DATA

OUTPUT

Q0-Q7	; RESULT DATA

CXD8936Q (SONY)

C-MOS ADDRESS ARITHMETIC PROCESSOR

- TOP VIEW -

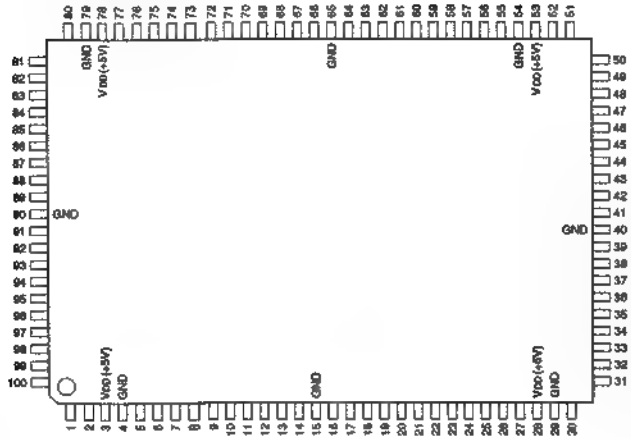

INPUT

A1-A3	; ADDRESS
AR0, AR1	; FP (FRONT PROCESSOR) CONTROL SIGNAL (AREA) AT COMMAND INTERFACE MODE
C0-C7	; FP (FRONT PROCESSOR) CONTROL COMMAND AT COMMAND DIRECT MODE
CE	; FP (FRONT PROCESSOR) CONTROL COMMAND ENABLE
CK	; CLOCK
D0-D15	; DATA
LN0	; FP (FRONT PROCESSOR) CONTROL SIGNAL (LINE) AT COMMAND INTERFACE MODE
MODE	; OPERATING MODE SELECT
TSL	; TABLE RAM BANK SELECT
TWT	; TABLE RAM WRITE TRIGGER
WE0-WE2	; WRITE ENABLE

OUTPUT

AUX	; GENERAL PURPOSE REGISTER DATA
E0-E4	; EXPONENT PART DATA
ER	; ARITHMETIC STATUS
N0-N15	; N SYSTEM ARITHMETIC SIGNAL
T0-T15	; T SYSTEM ARITHMETIC SIGNAL
TCE0, TCE1	; TABLE RAM CHIP ENABLE
TLT	; TABLE RAM ADDRESS AND DATA BUS LACH
TWE0, TWE1	; TABLE RAM WRITE ENABLE

(VDD=+5V)

PIN No.	I/O	SIGNAL	PIN No.	I/O	SIGNAL	PIN No.	I/O	SIGNAL	PIN No.	I/O	SIGNAL
1	O	AUX5	25	I	■	51	O	T11	76	O	N5
2	O	AUX4	27	I	D8	52	O	T10	77	O	N4
3	–	VDD	28	+	VDD	53	–	VDD	■	–	VDD
4	–	GND	29	–	GND	54	–	GND	79	–	GND
5	O	AUX3	30	I	D7	55	O	T9	80	O	N3
6	O	AUX2	31	I	D6	56	O	T8	81	O	N2
7	O	AUX1	32	I	D5	57	■	T7	■	O	N1
8	I	C2	33	I	D4	58	O	T6	83	O	N0
9	I	C1	34	I	D3	59	O	T5	84	I	LN0
10	I	C0	35	I	D2	60	O	T4	85	I	AR1
11	I	TSL	36	I	D1	61	O	T3	86	I	AR0
12	O	AUX0	37	I	D0	62	O	T2	87	O	ER
13	O	TCE1	38	I	WE2	63	O	T1	88	O	E4
14	O	TCE0	39	I	WE1	64	O	■	89	O	■
15	–	GND	40	–	GND	65	–	GND	90	–	GND
16	O	TWE1	41	I	CK	66	O	N15	91	O	E2
17	O	TWE0	42	I	WE0	67	O	N14	92	O	E1
18	O	TLT	43	I	A3	68	O	N13	93	O	E0
19	I	TWT	44	I	A2	69	O	N12	94	I	■
20	I	D15	45	I	A1	70	■	N11	95	I	C7
21	I	D14	46	I	MODE	71	■	N10	96	I	C6
22	I	D13	47	O	T15	72	O	N9	97	I	C5
23	I	D12	48	O	T14	73	O	N8	98	I	C4
24	I	D11	49	O	T13	74	O	N7	99	I	C3
25	I	D10	50	O	T12	75	O	N6	100	O	AUX6

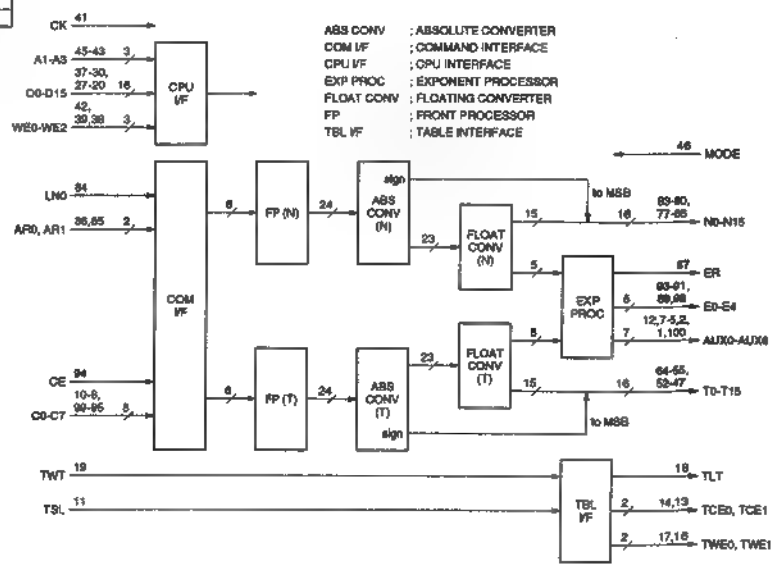

ABS CONV	; ABSOLUTE CONVERTER
COM I/F	; COMMAND INTERFACE
CPU I/F	; CPU INTERFACE
EXP PROC	; EXPONENT PROCESSOR
FLOAT CONV	; FLOATING CONVERTER
FP	; FRONT PROCESSOR
TBL I/F	; TABLE INTERFACE

CXK1206AM (SONY)FLAT PACKAGE

C-MOS VIDEO FIELD MEMORY(980-COLUMNx308-ROWx4-BIT)
-TOP VIEW-

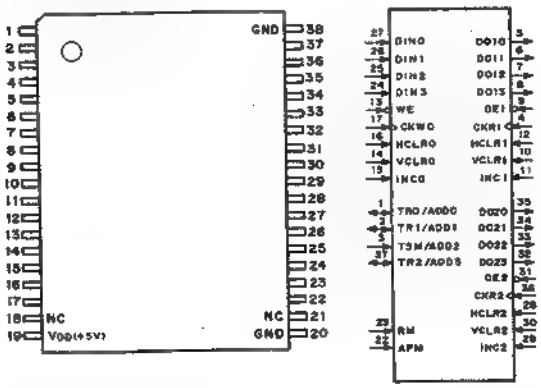

MODE SELECTION

CONTROL INPUTS			TR, TR/ADD		MODE
RM	APN	TSM	TR 0-2	ADD 0-3	
0	0	0	OUT-PUT	-	NON RECURSIVE MODE, TRANSFER SYNCHRONOUS MODE OUTPUT
0	0	1	IN-PUT	-	NON RECURSIVE MODE, TRANSFER SYNCHRONOUS MODE INPUT
0	1	-	-	IN-PUT	NON RECURSIVE MODE, ADDRESS PRESET MODE
1	0	0	OUT-PUT	-	RECURSIVE MODE, TRANSFER SYNCHRONOUS MODE OUTPUT
1	0	1	IN-PUT	-	RECURSIVE MODE, TRANSFER SYNCHRONOUS MODE INPUT

0:LOW LEVEL 1:HIGH LEVEL

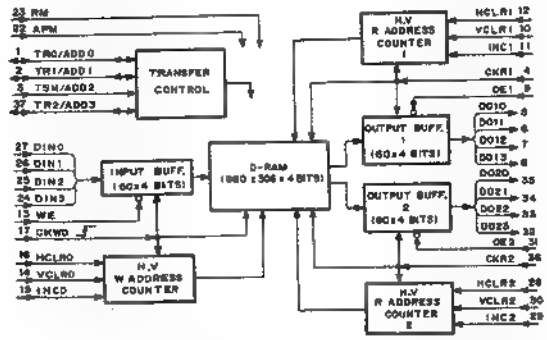

PIN	SIGNAL	DESCRIPTION
1	TR0/ADD0	W PORT 0 TRANSFER SYNC I/O, ADDRESS 0 INPUT
2	TR1/ADD1	R PORT 1 TRANSFER SYNC I/O, ADDRESS 1 INPUT
3	TSM/ADD2	TRANSFER SYNCHRONOUS MODE, ADDRESS 2 INPUT
4	CKR1	R PORT 1 SHIFT SIGNAL INPUT
5	DO10	R PORT 1 DATA 0 OUTPUT
6	DO11	R PORT 1 DATA 1 OUTPUT
7	DO12	R PORT 1 DATA 2 OUTPUT
8	DO13	R PORT 1 DATA 3 OUTPUT
9	OE1	R PORT 1 OUTPUT ENABLE INPUT
10	VCLR1	R PORT 1 VERTICAL CLEAR INPUT
11	INC1	R PORT 1 LINE INCREMENT INPUT
12	HCLR1	R PORT 1 HORIZONTAL CLEAR INPUT
13	WE	W PORT 0 WRITE ENABLE INPUT
14	VCLR0	W PORT 0 VERTICAL CLEAR INPUT
15	INC0	W PORT 0 LINE INCREMENT INPUT
16	HCLR0	W PORT 0 HORIZONTAL CLEAR INPUT
17	CKW0	W PORT 0 SHIFT SIGNAL INPUT
18	NC	(no connection)
19	VDD	+5V INPUT
20	GND	GND
21	NC	(no connection)
22	APN	ADDRESS PRESET MODE INPUT
23	RM	RECURSIVE MODE ENABLE INPUT
24	DIN3	W PORT 0 DATA 3 INPUT
25	DIN2	W PORT 0 DATA 2 INPUT
26	DIN1	W PORT 0 DATA 1 INPUT
27	DIN0	W PORT 0 DATA 0 INPUT
28	HCLR2	R PORT 2 HORIZONTAL CLEAR INPUT
29	INC2	R PORT 2 LINE INCREMENT INPUT
30	VCLR2	R PORT 2 VERTICAL CLEAR INPUT
31	OE2	R PORT 2 OUTPUT ENABLE INPUT
32	DO23	R PORT 2 DATA 3 OUTPUT
33	DO22	R PORT 2 DATA 2 OUTPUT
34	DO21	R PORT 2 DATA 1 OUTPUT
35	DO20	R PORT 2 DATA 0 OUTPUT
36	CKR2	R PORT 2 SHIFT SIGNAL INPUT
37	TR2/ADD3	R PORT 2 TRANSFER SYNC I/O, ADDRESS 3 INPUT
38	GND	GND

CY7C128A-25VCTEL (CYPRESS)

C-MOS STATIC RAM
-TOP VIEW-

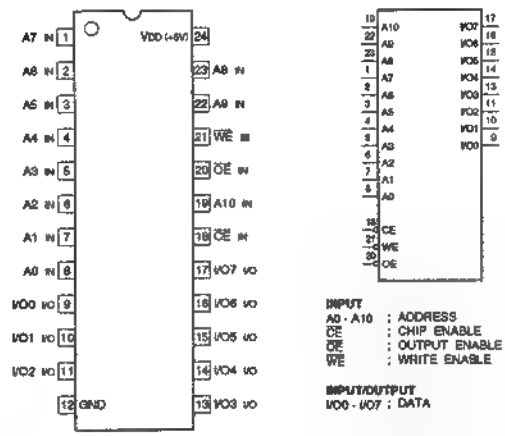

INPUT
A0 - A10 : ADDRESS
CE : CHIP ENABLE
OE : OUTPUT ENABLE
WE : WRITE ENABLE

INPUT/OUTPUT
I/O0 - I/O7 : DATA

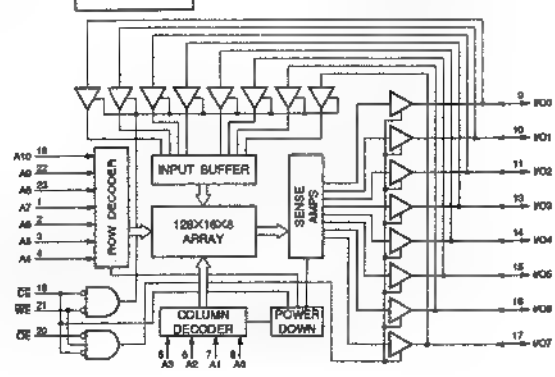

CXK581000AM-70LL (SONY)FLAT PACKAGE
CXK581000AM-70LL-TL

C-MOS 1M (131,072K x 8)-BIT STATIC RAM
—TOP VIEW—

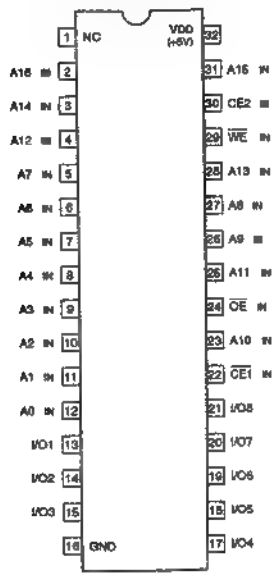

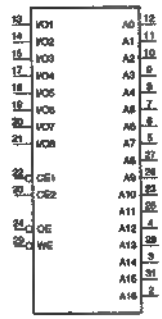

A0 - A16 : ADDRESS INPUTS
CE1, CE2 : CHIP ENABLE 1, 2 INPUTS
I/O1 - I/O8 : DATA INPUTS/OUTPUTS
OE : OUTPUT ENABLE INPUT
WE : WRITE ENABLE INPUT

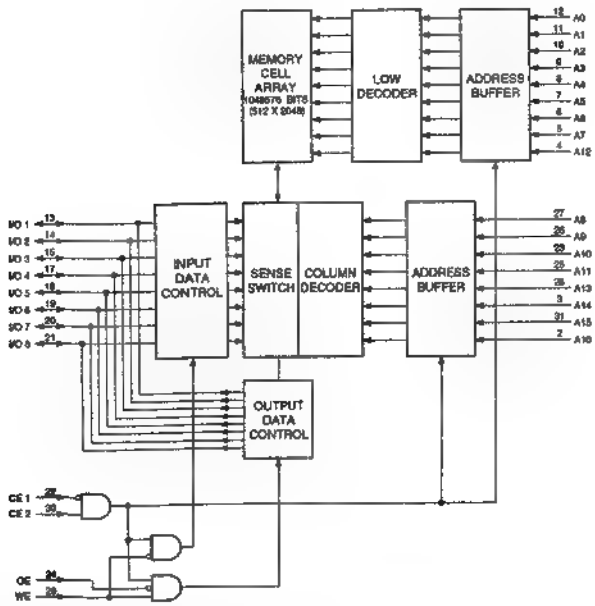

MODE :

CE1	CE2	OE	WE	MODE	DATA OUTPUT
1	X	X	X	NO SELECTION (POWER DOWN)	HI-Z
X	0	X	X		
0	1	1	1	OUTPUT DISABLE	HI-Z
0	1	0	1	READ	D OUT
0	1	X	■	WRITE	D IN

0 ; LOW LEVEL
1 ; HIGH LEVEL
X ; DON'T CARE
HI-Z ; HIGH IMPEDANCE

CY7C185-25VC (CYPRESS)J-LEADED PACKAGE
CY7C185-25VCTEL

C-MOS 8192-WORDx8-BIT HIGH SPEED STATIC RAM
-TOP VIEW-

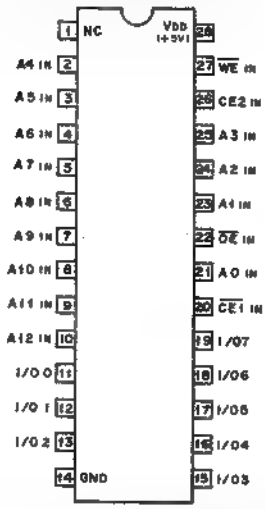

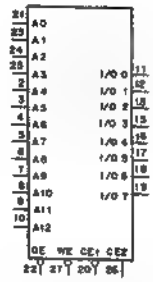

A0 – A14 : ADDRESS INPUTS
CE1, CE2 : CHIP ENABLE INPUT
I/O0 – I/O7 : DATA INPUTS/OUTPUTS
OE : OUTPUT ENABLE INPUT
WE : WRITE ENABLE INPUT

CE1	CE2	OE	WE	MODE	I/O TERMINAL
1	X	X	X	NOT SELECT	HI-Z
X	0	X	X	NOT SELECT	HI-Z
0	1	1	1	OUTPUT DISABLE	HI-Z
0	1	0	1	READ	OUTPUT DATA
0	1	X	0	WRITE	INPUT DATA

■ ; LOW LEVEL
1 ; HIGH LEVEL
X ; DON'T CARE
HI-Z ; HIGH IMPEDANCE

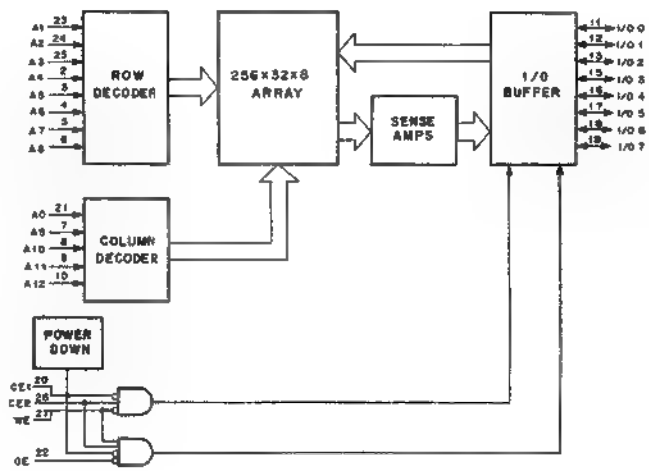

CY7C194-25VC (CYPRESS)CHIP CARRIER
CY7C194-25VCTEL

C-MOS 256K(65,536x4)-BIT STATIC READ/WRITE RAM
-TOP VIEW-

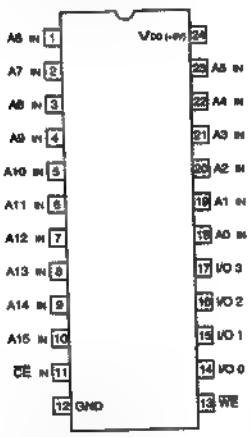

CE	WE	I/O	MODE
1	X	Hi-Z	DESELECT/POWER-DOWN
0	1	DATA OUT	READ
0	0	DATA IN	WRITE

A0 - A15 ; ADDRESS INPUTS
CE ; CHIP ENABLE INPUT
I/O0 - I/O3 ; DATA INPUTS/OUTPUTS
WE ; WRITE ENABLE INPUT

0 ; LOW LEVEL
1 ; HIGH LEVEL
X ; DON'T CARE
Hi-Z ; HIGH IMPEDANCE

CY7C199-15VC
CY7C199-20VC (CYPRESS)J-LEADED PACKAGE

C-MOS 256K (32,768 × 8)-BIT STATIC RAM
-TOP VIEW-

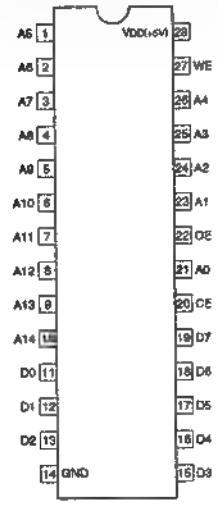

A0 - A14 ; ADDRESS INPUTS
CE ; CHIP ENABLE
D0 - D7 ; DATA INPUTS / OUTPUTS
OE ; OUTPUT ENABLE
WE ; WRITE ENABLE

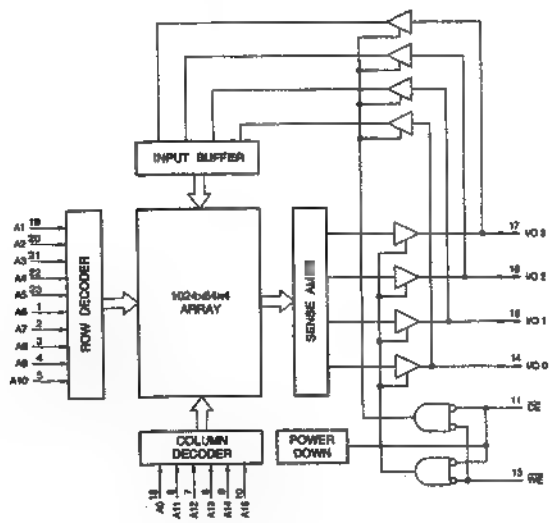

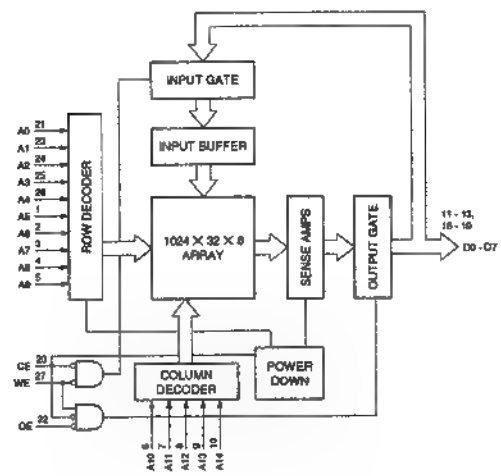

CY7C291A-35PC (CYPRESS)

C-MOS 16K(2048x8)-BIT EPROM
-TOP VIEW-

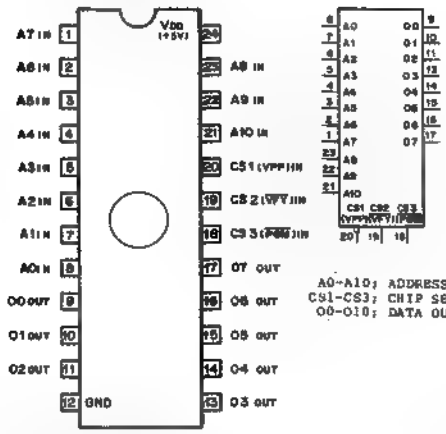

A0~A10; ADDRESS INPUT
CS1-CS3; CHIP SELECT
O0-O10; DATA OUTPUT

MODE SELECTION

CS1	CS2	CS3	OUTPUTS	MODE
0	1	1	DATA OUT	READ
1	X	X	HI-Z	OUTPUT DISABLE
X	0	X	HI-Z	OUTPUT DISABLE
X	X	0	HI-Z	OUTPUT DISABLE
VPP	1	0	DATA IN	PROGRAM
VPP	0	1	DATA OUT	PROGRAM VERIFY
VPP	1	1	HI-Z	PROGRAM INHIBIT
VPP	1	⊓	DATA IN	INTELLIGENT PROGRAM
0	0	VPP	ONES	BLANK CHECK ONES
0	1	VPP	ZEROS	BLANK CHECK ZEROS

0; LOW LEVEL
1; HIGH LEVEL
X; DON'T CARE
(NOT TO EXCEED VDD +5%)
HI-Z; HIGH IMPEDANCE
VPP; PROGRAMING VOLTAGE
(+13V to +14V)

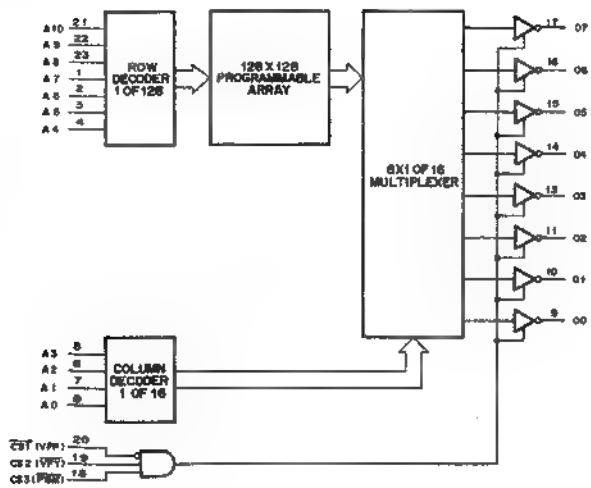

EPM7032LC44-15 (ALTERA)

C-MOS ERASABLE PLD
—TOP VIEW—

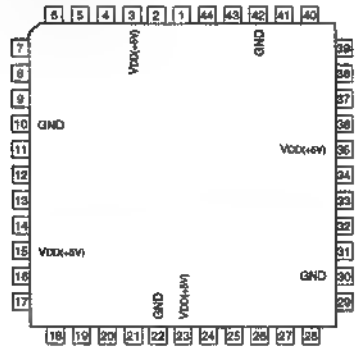

(VDD = +5V)

PIN No.	I/O	SIGNAL	PIN No.	I/O	SIGNAL	PIN No.	I/O	SIGNAL
1	I	GCLR/IN	17	I/O	I/O	33	I/O	I/O
2	I	OE2/IN	18	I/O	I/O	34	I/O	I/O
3	—	VDD	19	I/O	I/O	35	—	VDD
4	I/O	I/O	20	I/O	I/O	36	I/O	I/O
5	I/O	I/O	21	I/O	I/O	37	I/O	I/O
6	I/O	I/O	22	—	GND	38	I/O	I/O
7	I/O	I/O	23	—	VDD	39	I/O	I/O
8	I/O	I/O	24	I/O	I/O	40	I/O	I/O
9	I/O	I/O	25	I/O	I/O	41	I/O	I/O
10	—	GND	26	I/O	I/O	42	—	GND
11	I/O	I/O	27	I/O	I/O	43	I	GCLK/IN
12	I/O	I/O	28	I/O	I/O	44	I	OE1/IN
13	I/O	I/O	29	I/O	I/O			
14	I/O	I/O	30	—	GND			
15	—	VDD	31	I/O	I/O			
16	I/O	I/O	32	I/O	I/O			

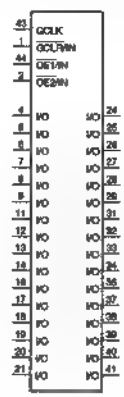

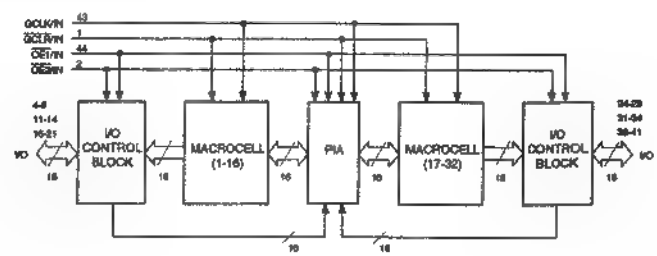

*ABOVE DIAGRAM SHOWS CONDITIONS BEFORE PROGRAMMING

GAL16V8B-15LP (LATTICE)

C-MOS ELECTRICALLY ERASABLE PROGRAMMABLE LOGIC DEVICE
—TOP VIEW—

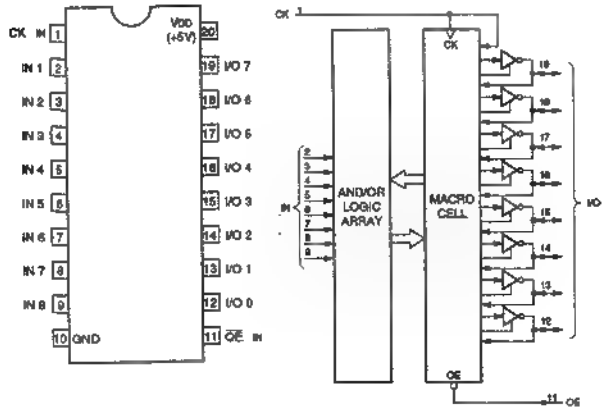

GAL20V8B-25LP (LATTICE)

C-MOS ELECTRICALLY ERASABLE PROGRAMMABLE LOGIC DEVICE
-TOP VIEW-

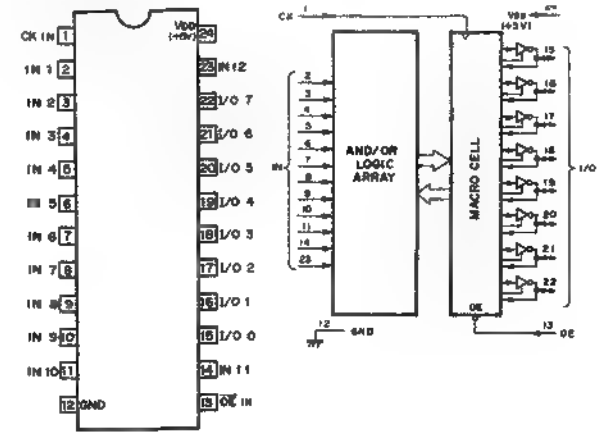

* ABOVE DIAGRAM SHOWS CONDITIONS BEFORE PROGRAMMING.

HD14053BFP (HITACHI)FLAT PACKAGE
MC14053BF (MOTOROLA)FLAT PACKAGE
MC14053BFEL
TC4053BFHB-TP2

C-MOS TRIPLE 2-CHANNEL ANALOG MULTIPLEXERS/DEMULTIPLEXERS
— TOP VIEW —

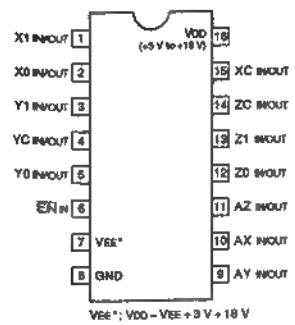

VEE*; VDD – VEE = 3 V ~ 18 V

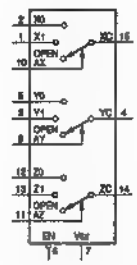

CONT. INPUTS		ON
EN	A (X, Y, Z)	CHANNEL
0	0	0
0	1	1
1	X	OPEN

0 ; LOW LEVEL
1 ; HIGH LEVEL
X ; DON'T CARE

HM530281-20 (HITACHI)FLAT PACKAGE
HM530281RTT-20

331,776WORDX8-BIT FRAME MEMORY
-TOP VIEW-

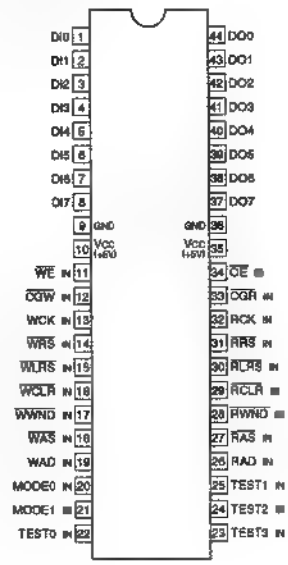

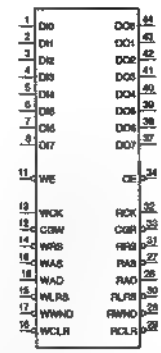

CGR	; READ CLOCK GATE
CGW	; WRITE CLOCK GATE
DI0 – 7	; DATA INPUTS
DO0 – 7	; DATA OUTPUTS
MODE0 – 1	; MODE SELECT INPUTS
$\overline{OE}$	; OUTPUT ENABLE INPUT
RAD	; READ ADDRESS
$\overline{RAS}$	; READ ADDRESS SET
RCK	; READ CLOCK INPUT
RCLR	; READ CLEAR
RLRS	; READ LINE RESET
$\overline{RRS}$	; READ RESET
RWND	; READ WINDOW MODE
TEST0 – 3	; TEST INPUTS
WAD	; WRITE ADDRESS
$\overline{WAS}$	; WRITE ADDRESS SET
WCK	; WRITE CLOCK INPUT
WCLR	; WRITE CLEAR
$\overline{WE}$	; WRITE ENABLE INPUT
WLRS	; WRITE LINE RESET
$\overline{WRS}$	; WRITE RESET
WWND	; WRITE WINDOW MODE

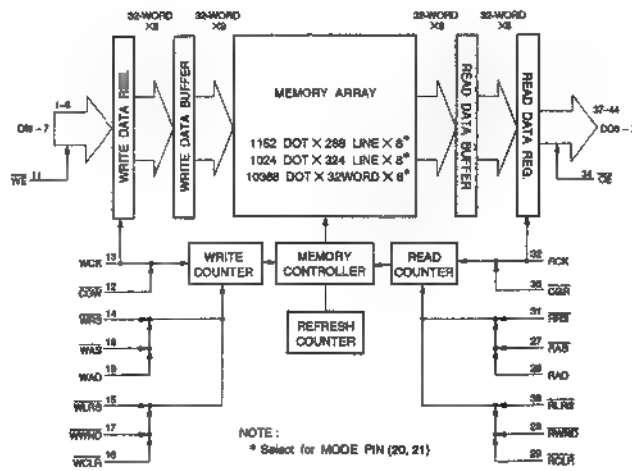

HN27C4096ACC-12 (HITACHI)

C-MOS 262,144-WORD × 16-BIT UV ERASABLE AND PROGRAMMABLE ROM
-TOP VIEW-

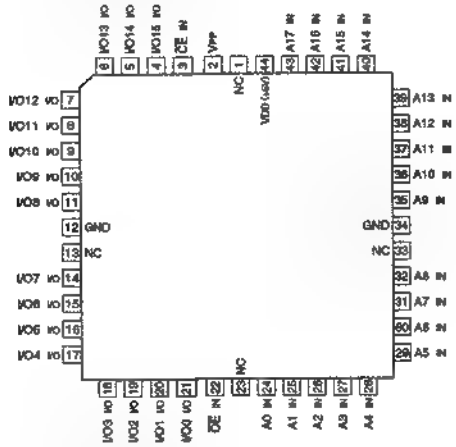

INPUT
A0 - A17 ; ADDRESS
CE ; CHIP ENABLE
OE ; OUTPUT ENABLE

INPUT/OUTPUT
I/O0 - I/O15 ; DATA

OTHER
Vpp ; PROGRAMMABLE POWER SUPPLY

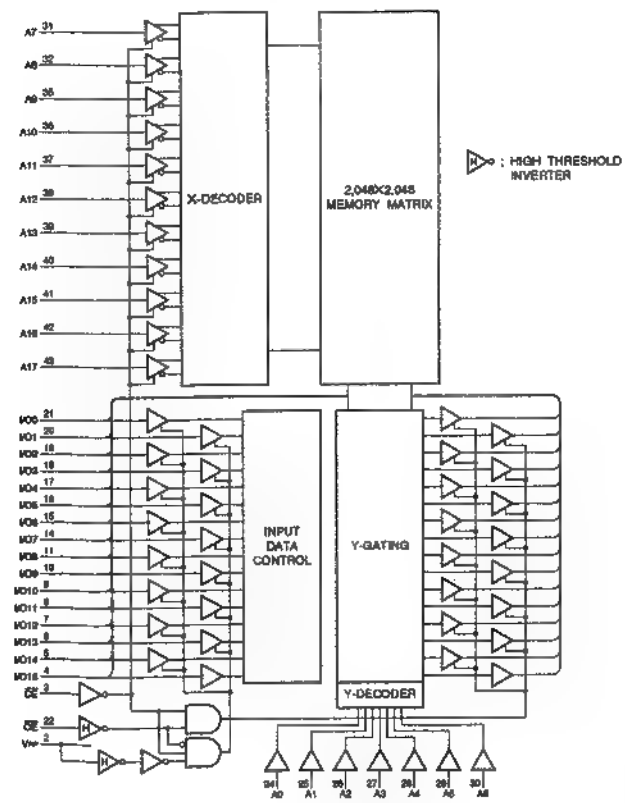

IDT6116SA25S0 (INTEGRATED DEVICE TECHNOLOGY)
IDT6116SA25SO-T

C-MOS 16K (2048 × 8)-BIT STATIC RAM
-TOP VIEW-

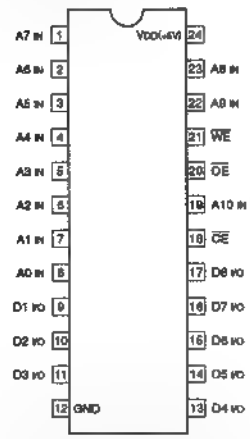

A0 - A10 ; ADDRESS INPUTS
CE ; CHIP ENABLE INPUT
D1 - D8 ; DATA INPUTS / OUTPUTS
OE ; OUTPUT ENABLE INPUT
WE ; WRITE ENABLE INPUT

FUNCTION TABLE

CONTROL INPUTS			MODE	D1 - D8
CE	OE	WE		
1	X	X	STANDBY	HI-Z
H	1	1	DISABLE OUTPUT	HI-Z
0	H	1	READ	OUTPUT
0	X	0	WRITE	INPUT

0 ; LOW LEVEL
1 ; HIGH LEVEL
X ; DON'T CARE
HI-Z ; HIGH IMPEDANCE

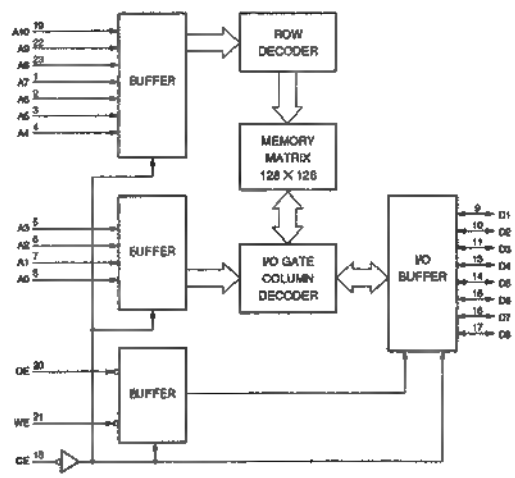

LC74760M-9070-TLM (SANYO)FLAT PACKAGE

C-MOS ON SCREEN DISPLAY
-TOP VIEW-

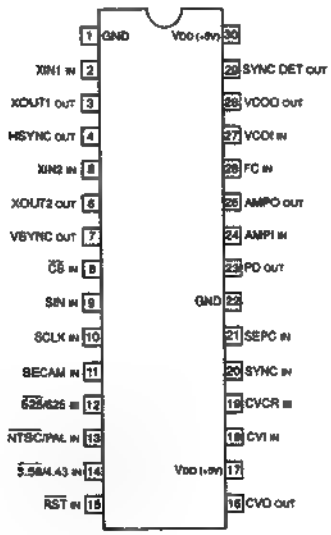

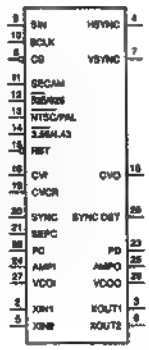

INPUT

3.58/4.43	; 3.58MHz/4.43MHz SELECT (L:3.58/H:4.43)
525/625	; 525 LINES/625 LINES SELECT (L:525/H:625)
AMPI	; FILTER CONNECT TERMINAL FOR AFC CIRCUIT
CS	; CHIP SELECT ENABLE
CVCR	; CHROMA SIGNAL FOR SECAM
CVI	; COMPOSITE VIDEO SIGNAL
PC	; AFC CONTROL VOLTAGE
NTSC/PAL	; NTSC/PAL SELECT (L:NTSC/H:PAL)
RST	; SYSTEM RESET (ACTIVE:L)
SCLK	; CLOCK FOR SERIAL DATA
SECAM	; SECAM MODE SELECT (L:EXCEPT SECAM/H:SECAM)
SEPC	; INTERNAL SYNC SEPARATE CIRCUIT ADJUSTMENT
SIN	; SERIAL DATA
SYNC	; INTERNAL SYNC SEPARATE CIRCUIT OF VIDEO SIGNAL
VCOI	; COIL AND CAPACITOR OSCILLATOR FOR VCO
XIN1	; CRYSTAL OSCILLATOR FOR INTERNAL SYNC GENERATOR (NTSC 4fsc=14.318MHz)
XIN2	; CRYSTAL OSCILLATOR FOR INTERNAL SYNC GENERATOR (PAL 4fsc=17.734MHz)

OUTPUT

AMPO	; FILTER CONNECT TERMINAL FOR AFC CIRCUIT
CVO	; COMPOSITE VIDEO SIGNAL
HSYNC	; HORIZONTAL SYNC
PD	; APC CONTROL VOLTAGE
SYNC DET	; EXTERNAL SYNC SIGNAL DETECT
VCOO	; COIL AND CAPACITOR OSCILLATOR FOR VCO
VSYNC	; VERTICAL SYNC
XOUT1	; CRYSTAL OSCILLATOR FOR INTERNAL SYNC GENERATOR (NTSC 4fsc=14.318MHz)
XOUT2	; CRYSTAL OSCILLATOR FOR INTERNAL SYNC GENERATOR (PAL 4fsc=17.734MHz)

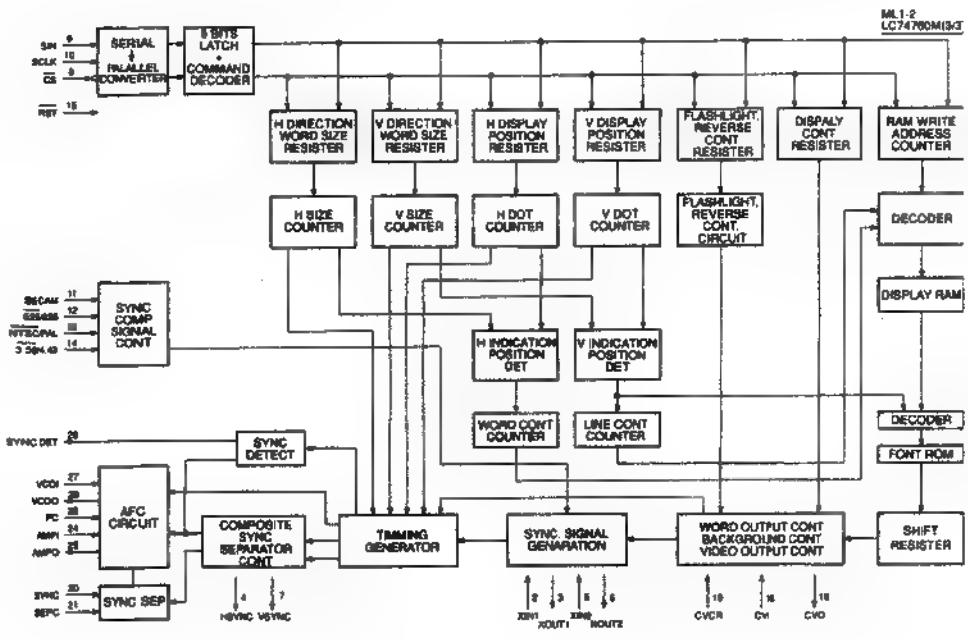

LM1881M (NS)FLAT PACKAGE
LM1881M-FL63

VIDEO SYNC SEPARATOR
—TOP VIEW—

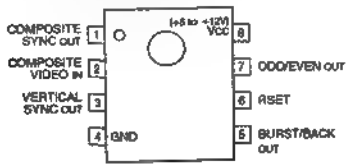

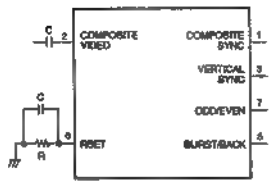

Timing Chart

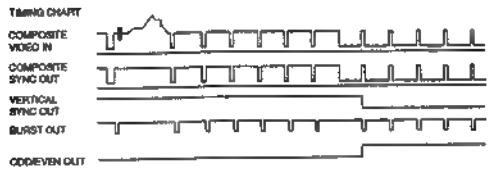

LM311PS (TI)FLAT PACKAGE
LM311M-FL63

VOLTAGE COMPARATOR WITH STROBE
—TOP VIEW—

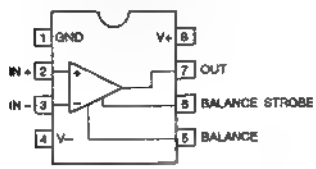

LM7912CT (NS)—12V(1 A)
NJM7905FA (JRC)—5V(1 A)
NJM79M05FA (JRC)—5V(0.5 A)
NJM79M12FA

NEGATIVE VOLTAGE REGULATOR
-FRONT VIEW-

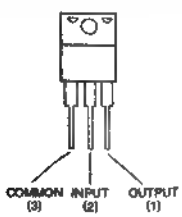

LT1074CT (LINEAR TECH)

SWITCHING REGULATOR
-TOP VIEW-

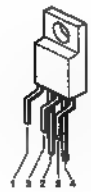

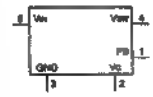

FB : Feedback
Vin : Voltage Input
Vsw : Switch Output
Vc : RC Network Connect

LT1171CT (LINEAR TECHNOLOGY)

SWITCHING REGULATORS(100kHz)
-TOP VIEW-

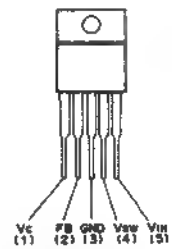

FB : FEEDBACK
GND : GROUND
Vc : CONTROL VOLTAGE IN
Vsw : SWITCH OUT
Vin : POWER VOLTAGE IN

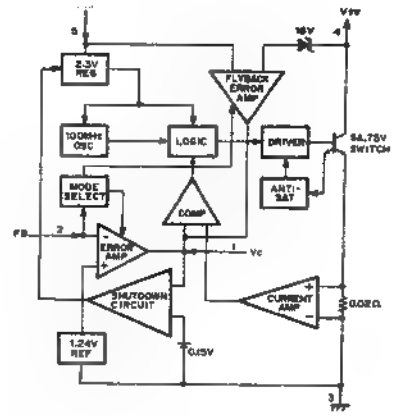

LT1252CS8 (LINEAR TECH)FLAT PACKAGE
LT1252CS8-E2

VIDEO AMPLIFIER
—TOP VIEW—

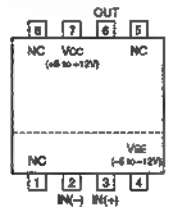

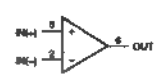

M27C1024-80XF1 (SGS)

C-MOS 1M (65,536X16)-BIT UV EPROM
-TOP VIEW-

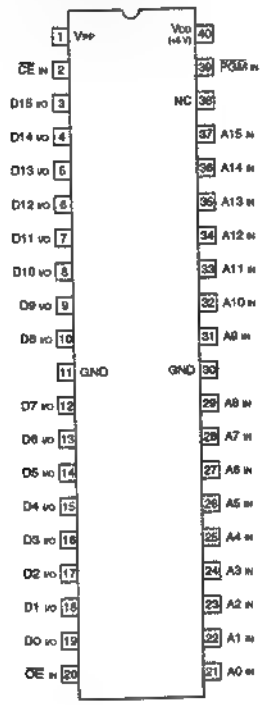

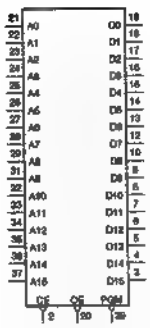

A0 - A15 ; ADDRESS INPUT
$\overline{CE}$; CHIP ENABLE INPUT
D0 - D15 ; DATA INPUT/OUTPUT
$\overline{OE}$; OUTPUT ENABLE INPUT
$\overline{PGM}$; PROGRAM ENABLE INPUT
Vpp ; PROGRAM VOLTAGE INPUT
(NORMAL : +5 V
PROGRAM : +12.5 V)

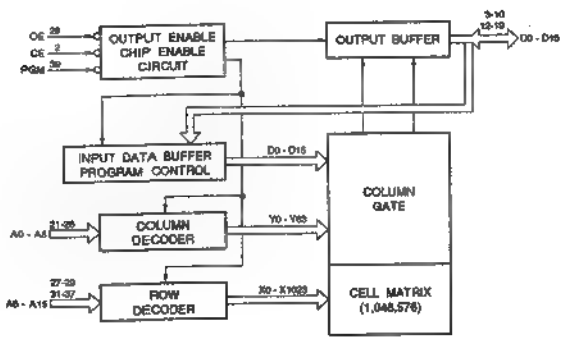

M27C4001-12F1 (SGS)

C-MOS 4M-BIT UV EPROM
-TOP VIEW-

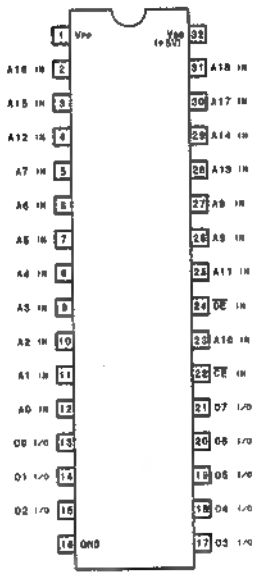

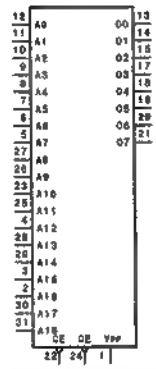

A0-A18 : ADDRESS INPUTS
$\overline{CE}$: CHIP ENABLE INPUT
O0-O7 : DATA INPUTS/OUTPUTS
$\overline{OE}$: OUTPUT ENABLE INPUT
Vpp : PROGRAMMING VOLTAGE INPUT (+12.75V)

PINS					MODE
$\overline{CE}$	$\overline{PGM}$	A9	Vpp	O0-O7	
0	0	X	X	D OUT	READ
0	1	X	X	HI-Z	OUTPUT DISABLE
1	X	X	X	HI-Z	STAND BY
0	1	X	Vpp	D IN	PROGRAM
1	0	X	Vpp	D OUT	PROGRAM VERIFY
1	1	X	Vpp	HI-Z	PROGRAM INHIBIT
0	0	+12V	Vpp	CODE	ELECTRONIC SIGNATURE

0 : LOW LEVEL
1 : HIGH LEVEL
X : DON'T CARE
HI-Z : HIGH IMPEDANCE

IDENTIFIER	A0	CODE DATA							
		O7	O6	O5	O4	O3	O2	O1	O0
MANUFACTURER CODE	0	0	0	1	0	0	0	0	20
DEVICE CODE	1	0	1	0	0	0	0	1	41

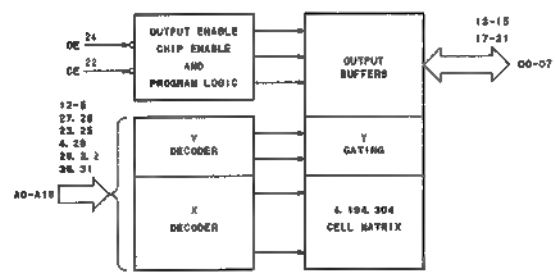

M27C512-12F1 (SGS)

C-MOS 512K (65,536X8 = 524,288)-BIT ERASABLE PROM
-TOP VIEW-

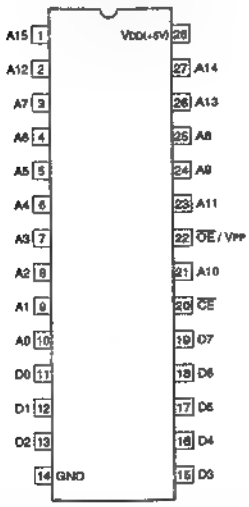

A0 - A15 ; ADDRESS INPUTS
CE ; CHIP ENABLE INPUT
D0 - D7 ; DATA OUTPUTS
OE ; OUTPUT ENABLE INPUT
VPP ; PROGRAM POWER SUPPLY

An	CE	OE/Vpp	VDD	Dn	FUNCTION
AIN	0	0	+5V	DOUT	READ
AIN	0	1	+5V	HI-Z	OUTPUT DISABLE
X	1	X	+5V	HI-Z	STANDBY
AIN	0	+12.5V	+6V	DIN	PGM
AIN	0	0	+6V	DOUT	PGM VERIFY
X	1	+12.5V	+6V	HI-Z	PGM INH

0 ; LOW LEVEL
1 ; HIGH LEVEL
X ; DON'T CARE
HI-Z ; HIGH IMPEDANCE

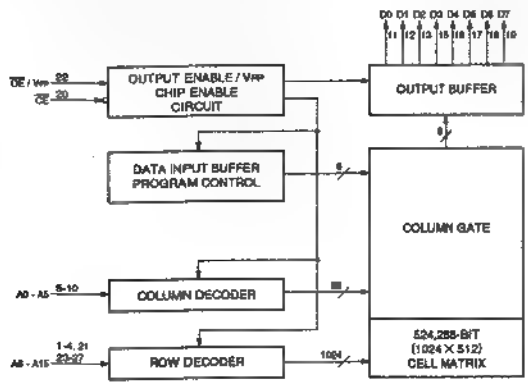

MC14001UBCP (MOTOROLA)

C-MOS 2-INPUT NOR GATE
-TOP VIEW-

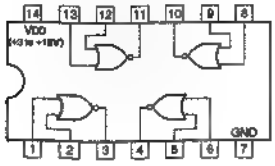

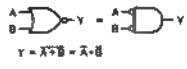

A	B	Y
0	0	1
0	1	0
1	0	0
1	1	0

0 ; LOW LEVEL
1 ; HIGH LEVEL

M51271FP (MITSUBISHI)FLAT PACKAGE

NTSC, PAL CHROMA DECODER
-TOP VIEW-

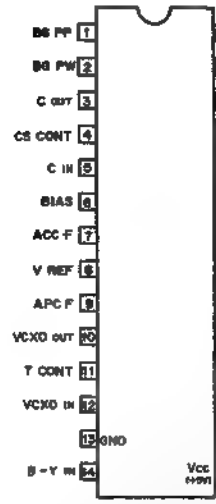

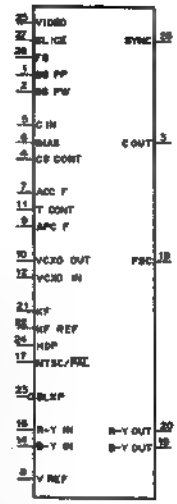

ACC F ; AUTOMATIC COLOR CONTROL FILTER
APC F ; AUTOMATIC PHASE CONTROL FILTER
BG PP ; BURST GATE PULSE POSITION
BG PW ; BURST GATE PULSE WIDTH
BIAS ; CHROMA INPUT BIAS CAPACITY
BLKP ; BLANKING PULSE INPUT
B-Y ; B-Y SIGNAL INPUT/OUTPUT
C ; CHROMA SIGNAL INPUT/OUTPUT
CS CONT ; COLOR SATURATION CONTROL
FB ; FEEDBACK CAPACITY OF SYNC SEPARATION
FSC ; SUB-CARRIER OUTPUT (180 DEGREES)
HDP ; HORIZONTAL DRIVE PULSE INPUT
KF ; KILLER FILTER CAPACITY
KF REF ; KILLER REFERENCE FILTER CAPACITY
NTSC/PAL ; PROCESS SELECT
R-Y ; R-Y SIGNAL INPUT/OUTPUT
SLICE ; SLICE LEVEL INPUT OF SYNC SEPARATION
SYNC ; SEPARATION SYNC SIGNAL OUTPUT
T CONT ; TINT CONTROL
VCXO ; VARIABLE CAPACITOR AND CRYSTAL OSCILLATOR
VIDEO ; VIDEO INPUT FOR SYNC SEPARATION
V REF ; REFERENCE VOLTAGE

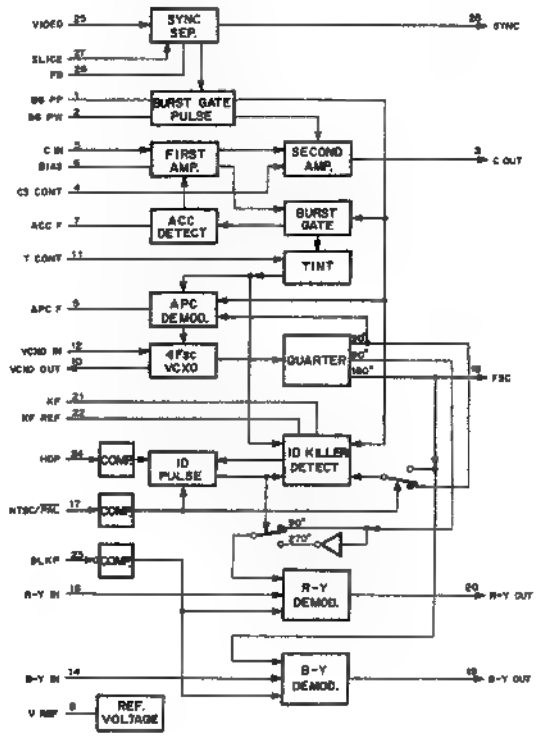

MAX232CPE
MAX232CWE (MAXIM)
MAX232CWE-TE-2
MAX232N (TI)

C-MOS RS-232 TRANSMITTER/RECEIVER
-TOP VIEW-

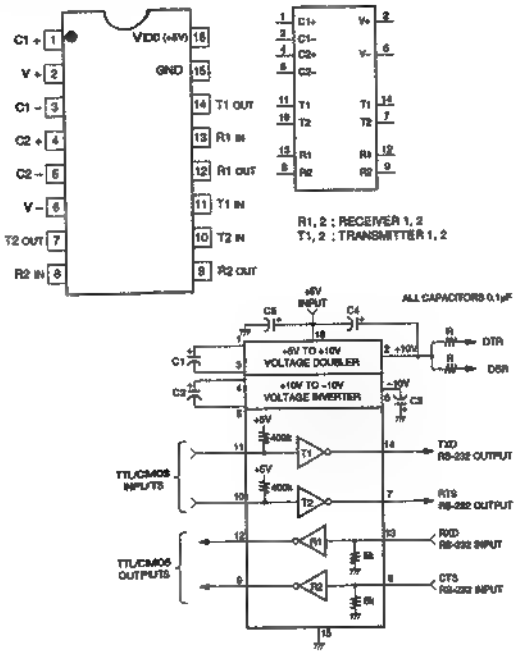

MBM29F400BA-12PF (FUJITSU)

C-MOS 4M (256K × 16) -BIT FLASH MEMORY
-TOP VIEW-

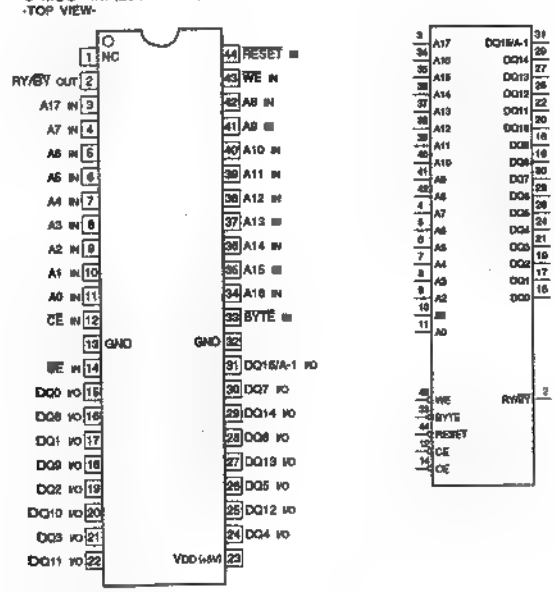

INPUT
A0 – A17, A-1 ; ADDRESS
BYTE ; 8-BIT, 16-BIT MODE SELECT
; CHIP ENABLE
; OUTPUT ENABLE
RESET ; HARDWARE RESET
WE ; WRITE ENABLE

OUTPUT
RY/BY ; READY/BUSY

INPUT/OUTPUT
DQ0 – DQ15 ; DATA

MC14002BCP (MOTOROLA)

C-MOS 4-INPUT NOR GATE
-TOP VIEW-

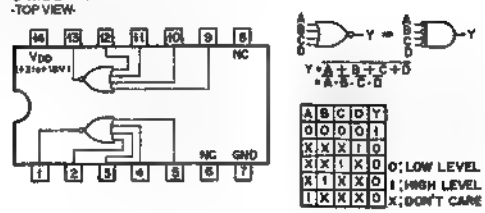

A	B	C	D	Y
0	0	0	0	1
X	X	X	1	0
X	X	1	X	0
X	1	X	X	0
1	X	X	X	0

0 ; LOW LEVEL
1 ; HIGH LEVEL
X ; DON'T CARE

MC14538BCP (MOTOROLA)

C-MOS DUAL RETRIGGERABLE MONOSTABLE MULTIVIBRATORS
-TOP VIEW-

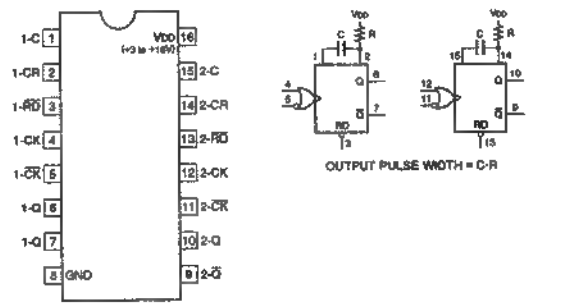

RETRIGGERABLE M.M.V

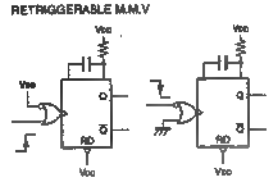

NON-RETRIGGERABLE M.M.V

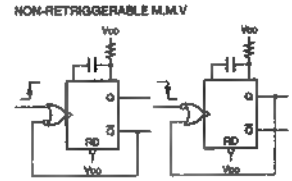

MC14577CF (MOTOROLA)FLAT PACKAGE
MC14577CFEL

C-MOS DUAL VIDEO AMPLIFIERS
-TOP VIEW-

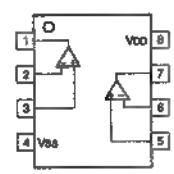

*VDD + | VSS | = +5V to +12V

MC34050ML (MOTOROLA)FLAT PACKAGE

DUAL DIFFERENTIAL LINE DRIVER/RECEIVER
—TOP VIEW—

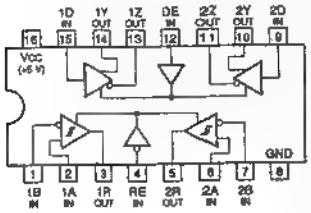

DRIVER BLOCK

INPUT	ENABLE	OUTPUTS	
D	DE	Y	Z
1	1	1	0
0	1	0	1
X	0	HI-Z	HI-Z

RECEIVER BLOCK

DIFFERENTIAL INPUT A-B	ENABLE RE	OUTPUT R
VID ≥ 0.2 V	0	1
−0.2 V < VID < 0.2 V	0	X
VID ≤ −0.2 V	0	0
0 OR 1	1	HI-Z

0 ; LOW LEVEL
1 ; HIGH LEVEL
X ; DON'T CARE
HI-Z: HIGH IMPEDANCE

MC34051MEL (MOTOROLA)

RS-422 DRIVER / RECEIVER
-TOP VIEW-

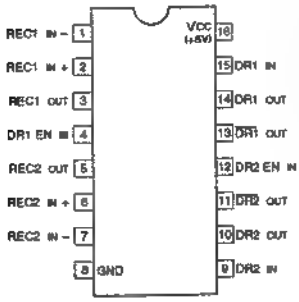

DR EN	MODE
0	DISABLE
1	ENABLE

0 ; LOW LEVEL
1 ; HIGH LEVEL

DR ; DRIVER
DR EN ; DRIVER ENABLE
REC ; RECEIVER

DRIVER CIRCUIT

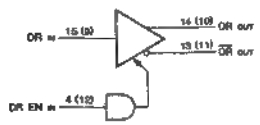

RECEIVER CIRCUIT

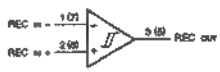

MC74HC163AF (MOTOROLA)FLAT PACKAGE
SN74HC163ANS-E05

C-MOS PRESETTABLE SYNCHRONOUS 4-BIT BINARY COUNTER
—TOP VIEW—

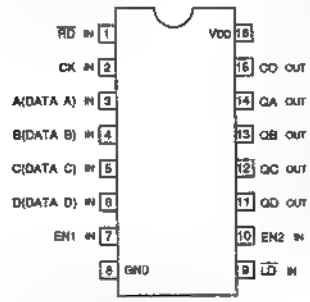

MODE SELECTION

CONTROL INPUTS				MODE
RD	LD	EN1	EN2	
0	X	X	X	RESET (SYNCHRONOUS)
1	0	X	X	PRESET (SYNCHRONOUS)
1	1	0	X	NO COUNT
1	1	X	0	NO COUNT
1	1	1	1	COUNT

CARRY OUTPUT "CO"

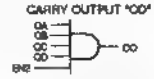

CO IS HIGH WHEN EN2 INPUT IS HIGH AND COUNT IS "15".

NOTE:

TYPE	VDD
HC	+2 to +6V
AC/VHC	+2 to +5.5V
HCT/ACT/FCT	+5V

COUNT SEQUENCE

COUNT	OUTPUTS			
	QD	QC	QB	QA
0	0	0	0	0
1	0	0	0	1
2	0	0	1	0
3	0	0	1	1
4	0	1	0	0
5	0	1	0	1
6	0	1	1	0
7	0	1	1	1
8	1	0	0	0
9	1	0	0	1
10	1	0	1	0
11	1	0	1	1
12	1	1	0	0
13	1	1	0	1
14	1	1	1	0
15	1	1	1	1

MC74HC390F (MOTOROLA)FLAT PACKAGE

C-MOS DIVIDE-BY-2 AND DIVIDE-BY-5 COUNTER
-TOP VIEW-

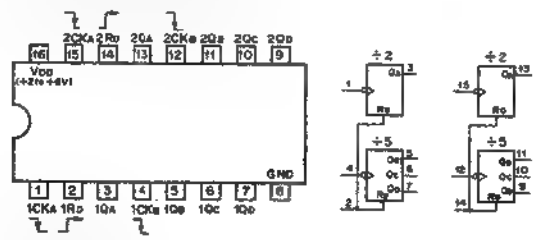

COUNT SEQUENCE
÷2 SECTION

COUNT	QA
0	0
1	1

÷5 SECTION

COUNT	QD	QC	QB
0	0	0	0
1	0	0	1
2	0	1	0
3	0	1	1
4	1	0	0

RESET/COUNT FUNCTION

RD	QD	QC	QB	QA
1	0	0	0	0
0	COUNT			

0 ; LOW LEVEL
1 ; HIGH LEVEL

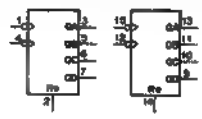

MSM514256BL-70ZS (OKI)

C-MOS 1M(262,144x4)-BIT DYNAMIC RAM

-TOP VIEW-

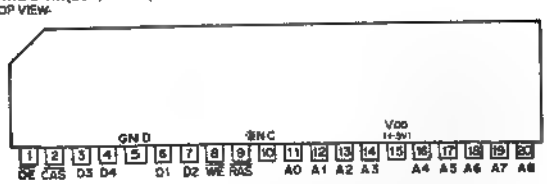

*NOTE ; PIN 11 OF MSM514256B/BL SERIES IS NO LEAD.

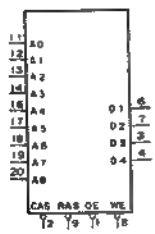

A0 ~ A8	;	ADDRESS INPUT
$\overline{CAS}$	;	COLUMN ADDRESS STROBE
D1 ~ D4	;	DATA IN/OUT
$\overline{OE}$	;	OUTPUT ENABLE
$\overline{RAS}$	;	ROW ADDRESS STROBE
$\overline{WE}$	;	WRITE ENABLE

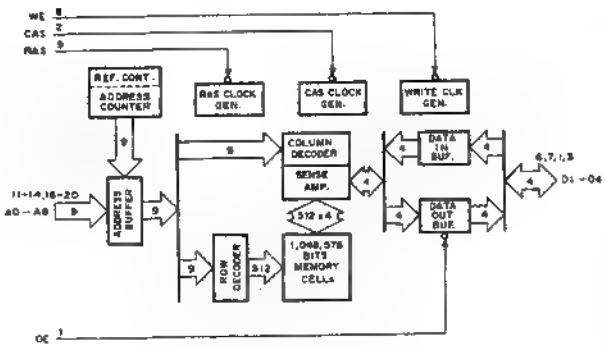

NJM2230M (JRC)FLAT PACKAGE
NJM2230M(TE2)

VIDEO SIGNAL DETECTOR

-TOP VIEW-

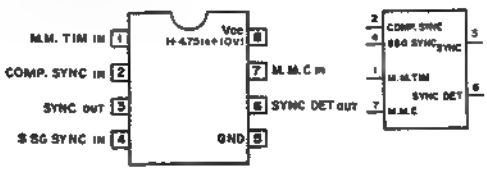

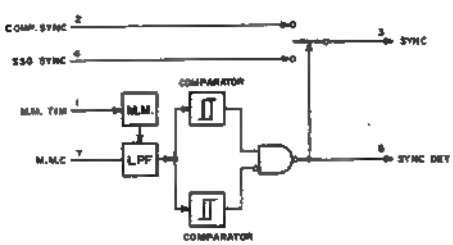

NJM2233BM (JRC)FLAT PACKAGE
NJM2233BM(TE2)

2-INPUT VIDEO SIGNAL SWITCH

-TOP VIEW-

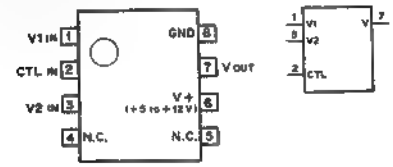

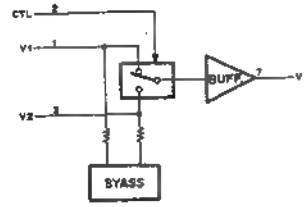

CTL	V
0	V1
1	V2

0 ; LOW LEVEL
1 ; HIGH LEVEL

NJM2235M-TE2 (JRC)FLAT PACKAGE
NJM2246M (JRC)FLAT PACKAGE
NJM2246M(TE2)

3-INPUT VIDEO SIGNAL SWITCH

-TOP VIEW-

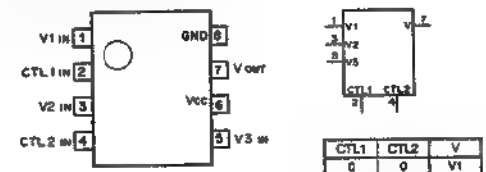

CTL1	CTL2	V
0	0	V1
1	0	V2
X	1	V3

0 ; LOW LEVEL
1 ; HIGH LEVEL
X ; DON'T CARE

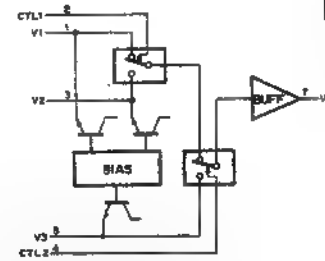

TYPE	GAIN	Vcc
NJM2235M	0dV	+5 to +15V
NJM2246D	+6dV	+4.75 to +13V
NJM2246M		

NJM2245M (JRC)FLAT PACKAGE
NJM2245M-T2

3-INPUT VIDEO SIGNAL SWITCH
-TOP VIEW-

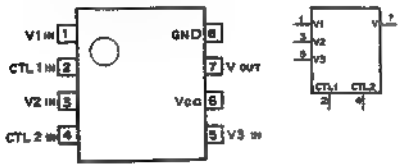

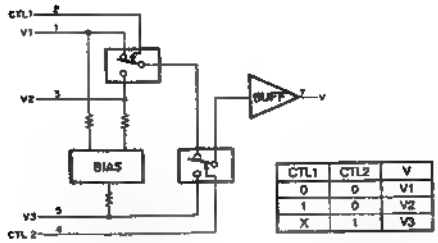

CTL1	CTL2	V
0	0	V1
1	0	V2
X	1	V3

0 : LOW LEVEL
1 : HIGH LEVEL
X : DON'T CARE

TYPE	GAIN	Vcc
NJM2234M	0 dB	+5 to +12V
NJM2245M	+6 dB	+8.5 to +13V

NJM4558D (JRC)
NJM5532D-D (JRC)

DUAL OPERATIONAL AMPLIFIER
-- TOP VIEW --

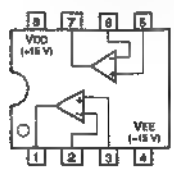

NJM4560S (JRC)

HIGH PERFORMANCE DUAL OPERATIONAL AMPLIFIER
-TOP VIEW-

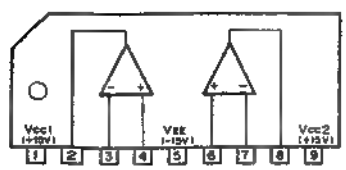

NJM7809FA (JRC)+9V(1 A)
NJM78M05FA (JRC)+5V(0.5 A)

POSITIVE VOLTAGE REGULATOR
—FRONT VIEW—

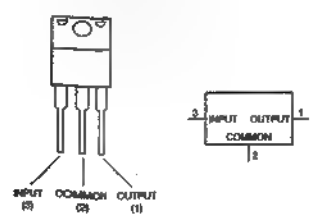

NJM78L05A (JRC)+5V(100mA)
NJM78L05A-T1
NJM78L09A-T1
TA78L09S (TOSHIBA)+9V(100mA)

POSITIVE VOLTAGE REGULATOR

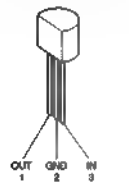

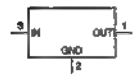

NJM78L09UA(TE1) (JRC)+12 V(100 mA)

POSITIVE VOLTAGE REGULATOR
-SIDE VIEW-

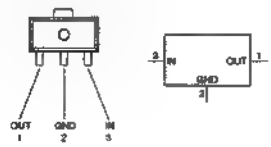

NJM79L05A (JRC)—5V(100 mA)
NJM79L05A-T1
NJM79L09A (JRC)—9V(100 mA)
NJM79L09A-T1

NEGATIVE VOLTAGE REGULATOR

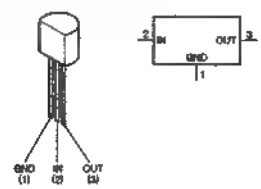

NJM79L05UA (JRC)—5V(100 mA)
NJM79L05UA-TE1

VOLTAGE REGULATOR

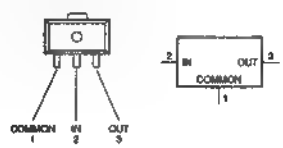

PCM69AP (BURR-BROWN)

C-MOS DUAL 18-BIT D/A CONVERTER
-TOP VIEW-

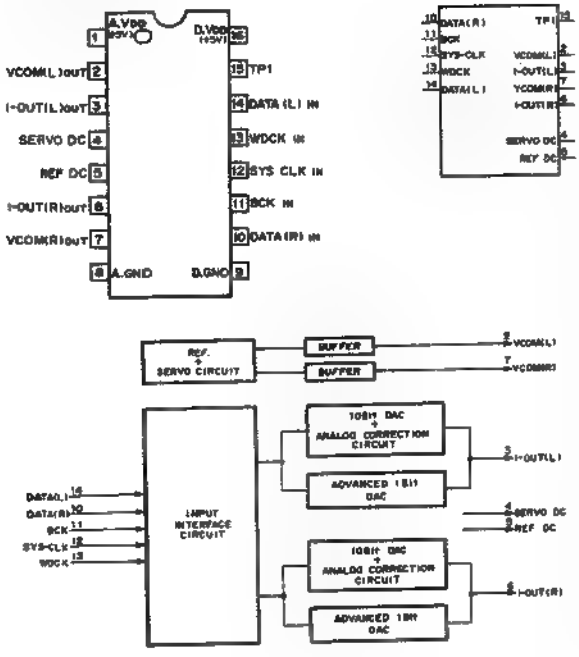

S16265NHC (SONY/TEKTRONIX)

C-MOS 4M-WORD × 36-BIT DINAMIC RAM
-SIDE VIEW-

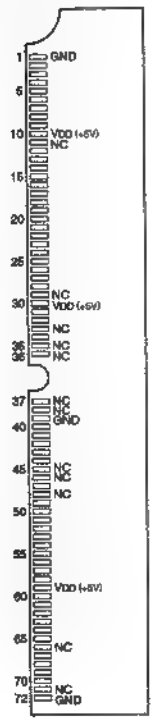

(VDD = +5V)

PIN No.	I/O	SIGNAL	PIN No.	I/O	SIGNAL	PIN No.	I/O	SIGNAL
1	—	GND	25	I/O	DQ22	49	I/O	DQ8
2	I/O	DQ0	26	I/O	DQ7	50	I/O	DQ24
3	I/O	DQ16	27	I/O	DQ23	51	I/O	DQ9
4	I/O	DQ1	28	I	A7	52	I/O	DQ25
5	I/O	DQ17	29	—	NC	53	I/O	DQ10
6	I/O	DQ2	30	—	VDD	54	I/O	DQ26
7	I/O	DQ18	31	I	A8	55	I/O	DQ11
8	I/O	DQ3	32	I	A9	56	I/O	DQ27
9	I/O	DQ19	33	—	NC	57	I/O	DQ12
10	—	VDD	34	I	$\overline{RAS1}$	58	I/O	DQ28
11	—	NC	35	—	NC	59	—	VDD
12	I	A0	36	—	NC	60	I/O	DQ29
13	I	A1	37	—	NC	61	I/O	DQ13
14	I	A2	38	—	NC	62	I/O	DQ30
15	I	A3	39	—	GND	63	I/O	DQ14
16	I	A4	40	I	$\overline{CAS0}$	64	I/O	DQ31
17	I	A5	41	I	$\overline{CAS2}$	65	I/O	DQ15
18	I	A6	42	I	$\overline{CAS3}$	66	—	NC
19	I	A10	43	I	$\overline{CAS1}$	67	I	PD0
20	I/O	DQ4	44	I	$\overline{RAS0}$	68	I	PD1
21	I/O	DQ20	45	—	NC	69	I	PD2
22	I/O	DQ6	46	—	NC	70	I	PD3
23	I/O	DQ21	47	I	$\overline{WE}$	71	—	NC
24	I/O	DQ6	48	—	NC	72	—	GND

PQ05SZ1U (SHARP)+5V 1A

POSITIVE VOLTAGE REGULATOR
-TOP VIEW-

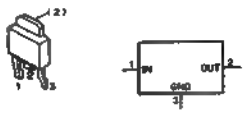

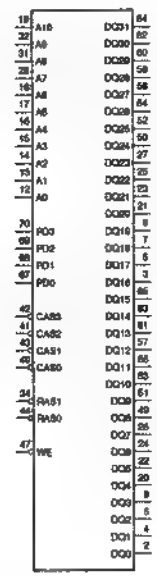

INPUT
A0 - A10 ; ADDRESS
$\overline{CAS0}$ - $\overline{CAS3}$; COLUMN ADDRESS STROBE
PD0 - PD3 ; PRESENCE DETECT PIN
$\overline{RAS0}$, $\overline{RAS1}$; ROW ADDRESS STROBE
$\overline{WE}$; WRITE ENABLE

INPUT/OUTPUT
DQ0 - DQ31 ; DATA

PST572FMT (MITSUMI) VS=4.5V

VOLTAGE DETECTOR,SYSTEM RESET
-TOP VIEW-

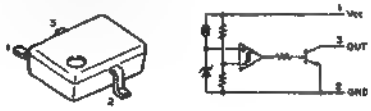

S-8054HNM (SEIKO I & E)4.50V—4.70V
S-8054HNM-Z

C-MOS VOLTAGE DETECTOR

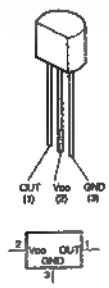

SC7S02F (MOTOROLA)CHIP PACKAGE
TC7S02F(TE85R)

C-MOS 2-INPUT NOR GATE

(SCALE 6/1)
—TOP VIEW—

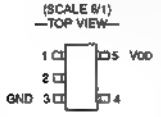

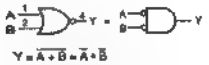

A	B	Y
0	0	1
0	1	0
1	0	0
1	1	0

0 ; LOW LEVEL
1 ; HIGH LEVEL

TYPE	VDD
4S01F	+3 to +18V
7S02F	+2 to +6V
7S02FU	
7SH02FU	

SC7S32F (MOTOROLA)CHIP PACKAGE
TC7S32F(TE85R)

C-MOS 2-INPUT OR GATE

(SCALE 6/1)
—TOP VIEW—

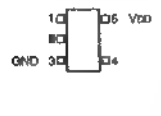

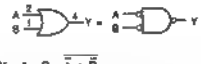

A	B	Y
0	0	0
0	1	1
1	0	1
1	1	1

0 ; LOW LEVEL
1 ; HIGH LEVEL

TYPE	VDD
7S32F 7S32FU	+2 to +6V
4S71F	+3 to +18V
7SH32FU	−2 to +6.5V

SM5828BP (NPC)

C-MOS 128 STEPS 8 BITS PROGRAMABLE SHIFT REGISTER

-TOP VIEW-

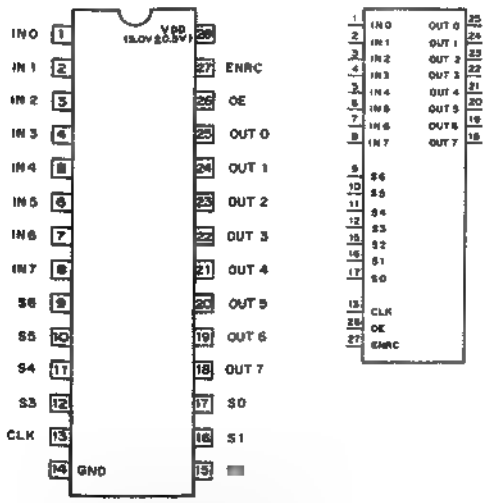

CLK ; CLOCK INPUT
ENRC ; CIRCULATION CONTROL
IN0-IN7 ; DATA INPUT
OE ; OUTPUT ENABLE
OUT0-OUT7 ; DATA OUTPUT
S0~S6 ; REGISTER LENGTH SELECT

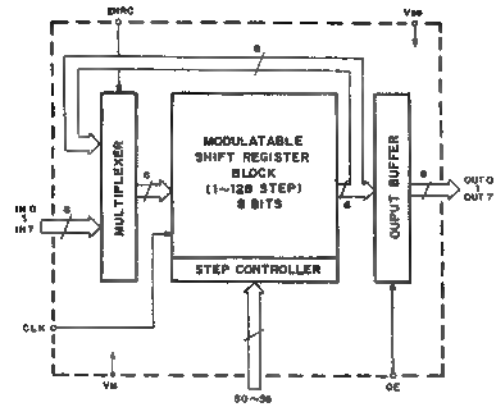

MODULATABLE SHIFT REGISTER BLOCK

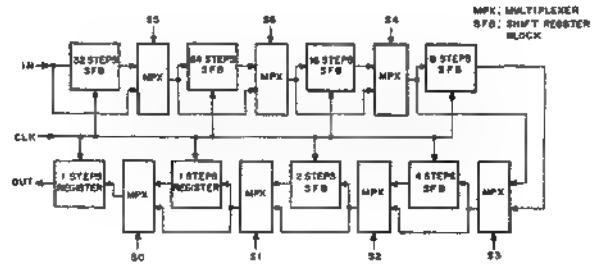

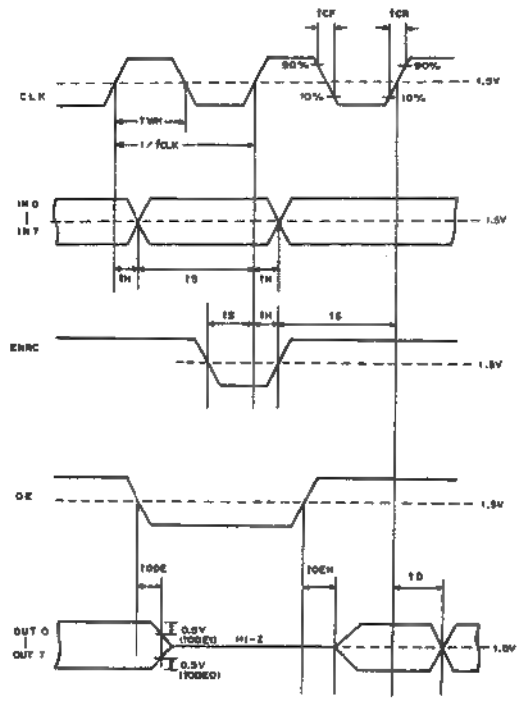

SM5843AS1-E2 (NPC)

C-MOS DIGITAL FILTER
-TOP VIEW-

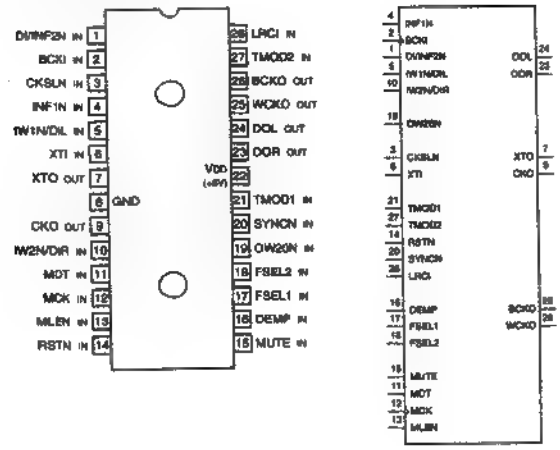

INPUT
BCKI : INPUT BIT CLOCK
CKSLN : INPUT FREQUENCY SELECT (H: 384fs/L: 256fs)
DEMP : DE-EMPHASIS CONTROL (L: OFF/H: ON)
DWNF2N : INPUT DATA (INF1N = L)/INPUT FORMAT SELECT 2 (INF1N = H)
FSEL1, 2 : DE-EMPHASIS SELECT

fs (Hz)		32k	44.1k	48k	TEST MODE
SETTING	FSEL1	H	L	L	H
	FSEL2	H	L	H	L

INF1N : INPUT FORMAT SELECT 1
IW1N/DIL : INPUT WORD LENGTH 1 (INF1N = L)/Lch DATA INPUT (TNF1N = H)
IW2N/DIR : INPUT WORD LENGTH 2 (INF1N = L)/Rch DATA INPUT (TNF1N = H)
LRCI : SAMPLE RATE CLOCK (fs)
MCK : ATTENUATION BIT CLOCK
MDT : ATTENUATION SERIAL DATA
MLEN : ATTENUATION LATCH CLOCK
MUTE : MUTE CONTROL
OW20N : OUTPUT WORD LENGTH

OUTPUT WORD LENGTH (BIT)	18	20
OW20N	H	L

RSTN : SYSTEM RESET (L: RESET/H: NORMAL)
SYNCN : SYNC MODE SELECT (L: EXECUTION SYNC MODE/H: JITTER FREE MODE)
TMOD1 : DITHER ON/OFF SELECT (L: ON/H: OFF)
TMOD2 : FILTER CHARACTER SELECT
XTI : OSCILLATOR INPUT

OUTPUT
BCKO : OUTPUT BIT CLOCK
CKO : OSCILLATOR OUTPUT CLOCK
DOL : Lch DATA
DOR : Rch DATA
WCKO : OUTPUT WORD CLOCK
XTO : OSCILLATOR OUTPUT

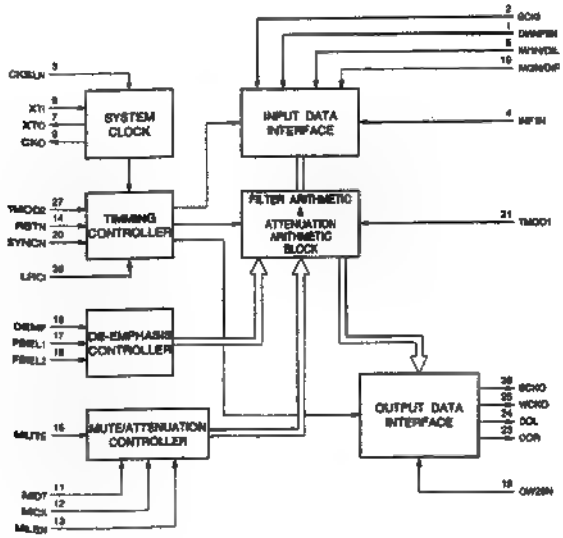

SN74ABT16374ADL (TI)
SN74ABT16374DL (TI)

C-MOS 3-STATE 16-BIT D-TYPE FLIP-FLOP
-TOP VIEW-

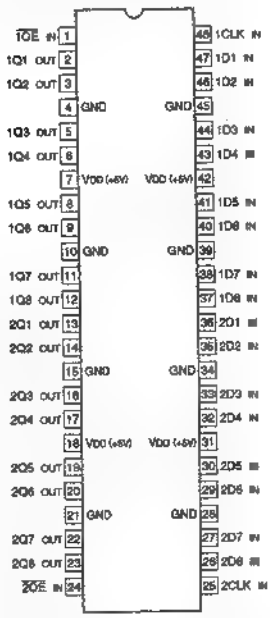

INPUT
1CLK, 2CLK ; CLOCK
1D1 - 1D8, 2D1 - 2D8 ; DATA
1OE, 2OE ; OUTPUT ENABLE

OUTPUT
1Q1 - 1Q8, 2Q1 - 2Q8 ; DATA

INPUTS			OUTPUT
OE	CLK	D	Q
0	↑	1	1
0	↑	0	0
0	0	X	Q0
1	X	X	HI-Z

0 ; LOW LEVEL
1 ; HIGH LEVEL
X ; DON'T CARE
HI-Z ; HIGH IMPEDANCE

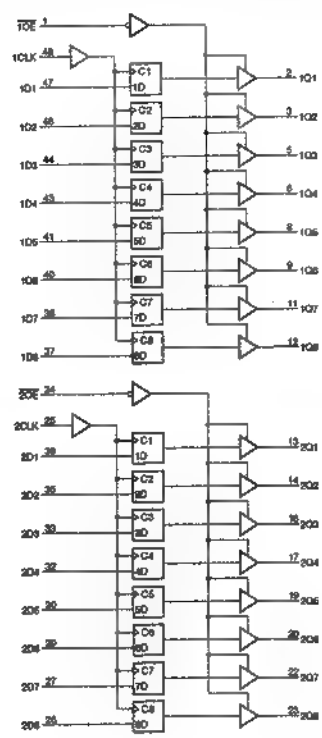

SN74ALS00AN (TI)
SN74ALS00ANS-E05 (TI)
SN74LS00NS (TI)FLAT PACKAGE
SN74LS00NS-E05

TTL 2-INPUT POSITIVE-NAND GATE
-TOP VIEW-

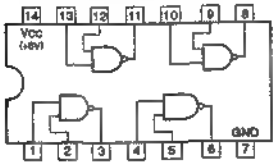

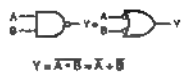

A	B	Y
0	0	1
0	1	1
1	0	1
1	1	0

0 ; LOW LEVEL
1 ; HIGH LEVEL

SN74ALS04BNS (TI)FLAT PACKAGE
SN74ALS04BNS-E20
SN74AS04NS-E05 (TI)

TTL INVERTER
—TOP VIEW—

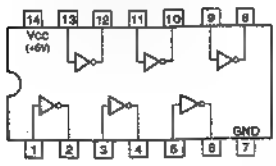

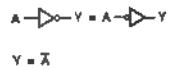

A	Y
0	1
1	0

0 ; LOW LEVEL
1 ; HIGH LEVEL

SN74ALS138AN (TI)
SN74ALS138ANS-E05 (TI)
SN74ALS138NS (TI)FLAT PACKAGE
SN74ALS138NS-E05
SN74AS138NS-E05 (TI)

TTL 3-TO-8-LINE DECODER/DEMULTIPLEXER
-TOP VIEW-

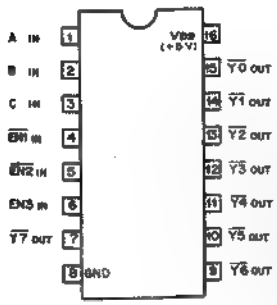

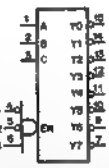

INPUTS				OUTPUTS							
EN	C	B	A	Y7	Y6	Y5	Y4	Y3	Y2	Y1	Y0
0	X	X	X	1	1	1	1	1	1	1	1
1	0	0	0	1	1	1	1	1	1	1	0
1	0	0	1	1	1	1	1	1	1	0	1
1	0	1	0	1	1	1	1	1	0	1	1
1	0	1	1	1	1	1	1	0	1	1	1
1	1	0	0	1	1	1	0	1	1	1	1
1	1	0	1	1	1	0	1	1	1	1	1
1	1	1	0	1	0	1	1	1	1	1	1
1	1	1	1	0	1	1	1	1	1	1	1

EN = EN1 · EN2 · EN3

0 ; LOW LEVEL
1 ; HIGH LEVEL
X ; DON'T CARE

SN74ALS153NS (TI)FLAT PACKAGE
SN74ALS153NS-E05

TTL 4-LINE-TO-1-LINE DATA SELECTOR/MULTIPLEXER
-TOP VIEW-

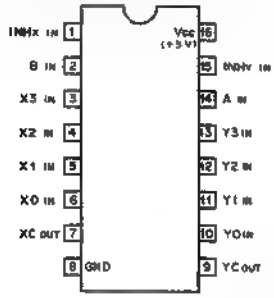

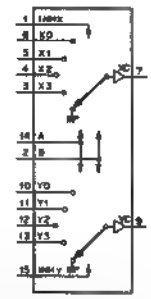

CONTROL IN			ON CHANNEL
INH	B	A	
0	0	0	0
0	0	1	1
0	1	0	2
0	1	1	3
1	X	X	GND

0 : LOW LEVEL
1 : HIGH LEVEL
X : DON'T CARE

SN74ALS157ANS (TI)FLAT PACKAGE
SN74ALS157ANS-E05

TTL QUAD 2-LINE-TO-1-LINE DATA SELECTORS/ MULTIPLEXERS
—TOP VIEW—

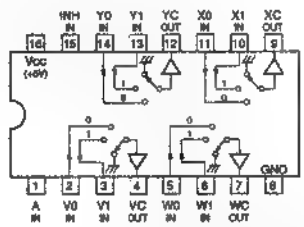

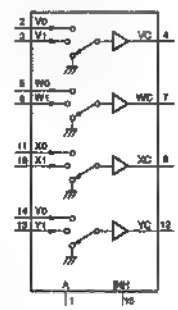

CONT. IN		ON CHANNEL
INH	A	
0	0	0
0	1	1
1	X	GND

0 ; LOW LEVEL
1 ; HIGH LEVEL
X ; DON'T CARE

SN74ALS240ANS (TI)
SN74ALS240ANS-E05
SN74ALS240ANS-E20 (TI)

TTL 3-STATE SCHMITT TRIGGER INVERTER/LINE DRIVER
—TOP VIEW—

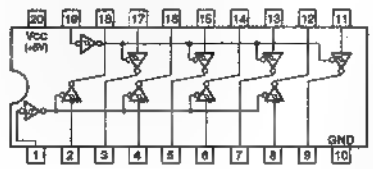

G	A	Y
0	0	1
0	1	0
1	X	HI-Z

0 ; LOW LEVEL
1 ; HIGH LEVEL
X ; DON'T CARE
HI-Z ; HIGH IMPEDANCE

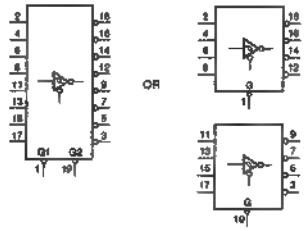

SN74ALS163BNS-E05 (TI)

TTL PRESETTABLE SYNCHRONOUS 4-BIT BINARY COUNTER
-TOP VIEW-

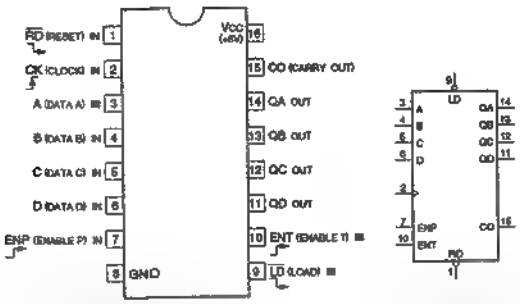

MODE SELECTION

CONTROL INPUTS				MODE
RD	LD	ENP	ENT	
0	×	×	×	RESET (SYNCHRONOUS)
1	0	×	×	PRESET (SYNCHRONOUS)
1	1	0	×	NO COUNT
1	1	×	0	NO COUNT
1	1	1	1	COUNT

0 ; LOW LEVEL
1 ; HIGH LEVEL
× ; DON'T CARE

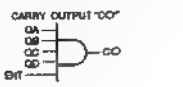

CO IS HIGH WHEN ENT INPUT IS HIGH AND COUNT IS "15".

COUNT SEQUENCE

COUNT	OUTPUTS			
	QD	QC	QB	QA
0	0	0	0	0
1	0	0	0	1
2	0	0	1	0
3	0	0	1	1
4	0	1	0	0
5	0	1	0	1
6	0	1	1	0
7	0	1	1	1
8	1	0	0	0
9	1	0	0	1
10	1	0	1	0
11	1	0	1	1
12	1	1	0	0
13	1	1	0	1
14	1	1	1	0
15	1	1	1	1

SN74ALS245AN (TI)
SN74ALS245ANS-E05
SN74ALS245ANS (TI)FLAT PACKAGE
SN74LS245NS (TI)FLAT PACKAGE
SN74LS245NS-E20

TTL BILATERAL SCHMITT TRIGGER BUS TRANSCEIVERS WITH 3-STATE OUTPUTS
—TOP VIEW—

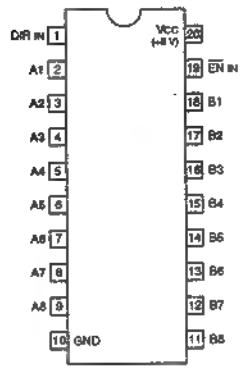

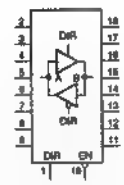

EN	DIR	OPERATION
0	0	B to A
0	1	A to B
1	X	HI-Z

0 ; LOW LEVEL
1 ; HIGH LEVEL
X ; DON'T CARE
HI-Z; HIGH IMPEDANCE

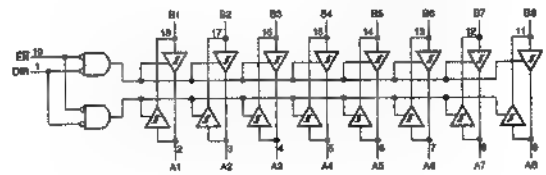

SN74ALS244CN (TI)
SN74ALS244CNS-E20 (TI)
SN74ALS244CNS-E05
SN74LS244NS (TI)FLAT PACKAGE
SN74LS244NS-E05

TTL 3-STATE SCHMITT TRIGGER BUFFER/DRIVER
—TOP VIEW—

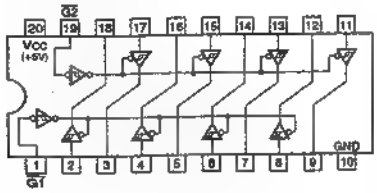

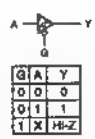

G	A	Y
0	0	0
0	1	1
1	X	HI-Z

0 ; LOW LEVEL
1 ; HIGH LEVEL
X ; DON'T CARE
HI-Z ; HIGH IMPEDANCE

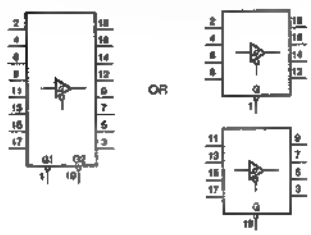

SN74ALS374ANS (TI)FLAT PACKAGE
SN74ALS374ANS-E05

TTL 3-STATE OUTPUTS OCTAL D-TYPE FLIP-FLOP
-TOP VIEW-

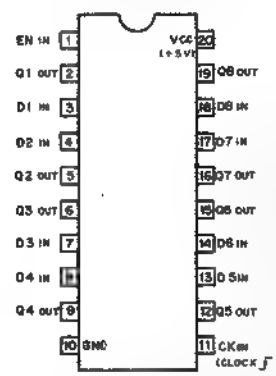

INPUTS			OUT
EN	D	CK	Q
0	1	∫	1
0	0	∫	0
0	X	0	Q0
1	X	X	HI-Z

0 ; LOW LEVEL
1 ; HIGH LEVEL
X ; DON'T CARE
HI-Z ; HIGH IMPEDANCE

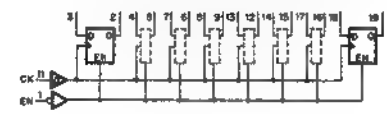

SN74ALS540NS (TI)FLAT PACKAGE
SN74ALS540NS-E05

TTL OCTAL LINE BUFFERS/DRIVERS WITH 3-STATE OUTPUTS
—TOP VIEW—

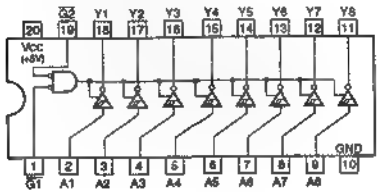

G1	G2	A	Y
0	0	0	1
0	0	1	0
1	X	X	HI-Z
X	1	X	HI-Z

0 ; LOW LEVEL
1 ; HIGH LEVEL
X ; DON'T CARE
HI-Z ; HIGH IMPEDANCE

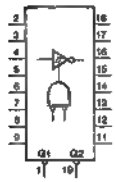

SN74ALS541NS (TI)FLAT PACKAGE
SN74ALS541NS-E05
SN74LS541NS (TI)
SN74LS541NS-E20

TTL BUFFERS AND LINE DRIVERS WITH 3-STATE OUTPUTS
—TOP VIEW—

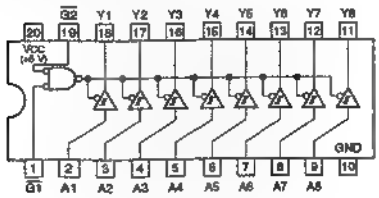

G1	G2	A	Y
0	0	0	0
0	0	1	1
1	X	X	HI-Z
X	1	X	HI-Z

0 ; LOW LEVEL
1 ; HIGH LEVEL
X ; DON'T CARE
HI-Z; HIGH IMPEDANCE

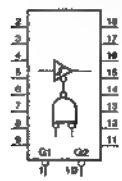

74F574SJ
SN74ALS574BNS (TI)FLAT PACKAGE
SN74ALS574BNS-E05
SN74ALS574BNS-E20

TTL 3-STATE D-TYPE EDGE-TRIGGERED FLIP-FLOP
—TOP VIEW—

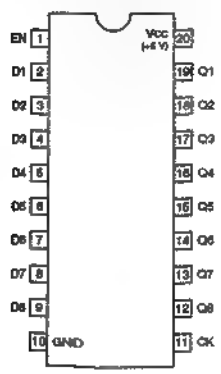

EACH FLIP-FLOP

INPUTS			OUT
EN	CK	D	Q
0	↑	1	1
0	↑	0	0
0	0	X	Qo
1	X	X	HI-Z

0 ; LOW LEVEL
1 ; HIGH LEVEL
X ; DON'T CARE
HI-Z ; HIGH IMPEDANCE
Qo ; NO CHANGE

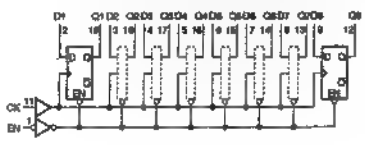

SN74ALS74ANS (TI)FLAT PACKAGE
SN74ALS74ANS-E05
SN74LS74ANS-E05 (TI)

TTL D-TYPE FLIP FLOP WITH DIRECT SET/RESET
-TOP VIEW-

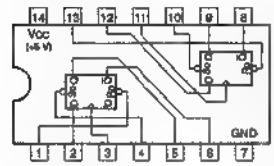

INPUTS				OUTPUTS	
SD	RD	CK	D	Qn+1	Qn+1
0	1	X	X	1	0
1	0	X	X	0	1
0	0	X	X	1*	1*
1	1	↓	1	1	0
1	1	↓	0	0	1
1	1	0	X	Qn	Qn

0 ; LOW LEVEL
1 ; HIGH LEVEL
X ; DON'T CARE
1* ; NONSTABLE

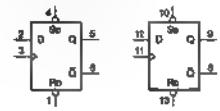

SN74ALS02ANS-E05
SN74AS02NS-E05 (TI)

TTL 2-INPUT POSITIVE-NOR GATES
-TOP VIEW-

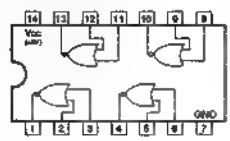

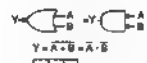

A	B	Y
0	0	1
0	1	0
1	0	0
1	1	0

0 ; LOW LEVEL
1 ; HIGH LEVEL

SN74AS32NS-E05 (TI)

TTL 2-INPUT POSITIVE-OR GATE
-TOP VIEW-

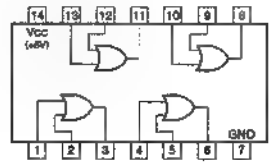

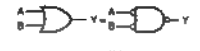

A	B	Y
0	0	0
0	1	1
1	0	1
1	1	1

0 ; LOW LEVEL
1 ; HIGH LEVEL

SN74HC02ANS (TI)FLAT PACKAGE
SN74HC02ANS-E05

C-MOS QUAD 2-INPUT NOR GATES
—TOP VIEW—

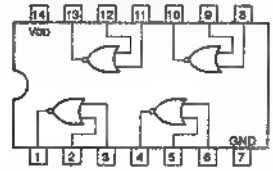

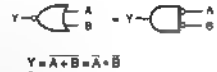

A	B	Y
0	0	1
0	1	0
1	0	0
1	1	0

0 ; LOW LEVEL
1 ; HIGH LEVEL

NOTE:

TYPE	VDD
HC	+2 to +6V
AC/VHC	+2 to +5.5V
HCT/ACT	+5V

SN74HC04ANS (TI)FLAT PACKAGE
SN74HC04ANS-E05
SN74HCU04ANS (TI)FLAT PACKAGE
SN74HCU04ANS-E05
SN74HCU04ANS-E20
TC74VHC04F (TOSHIBA)FLAT PACKAGE
TC74VHC04F(EL)

C-MOS HEX INVERTERS
-TOP VIEW-

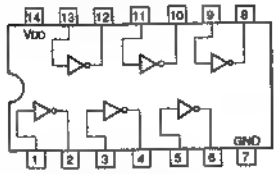

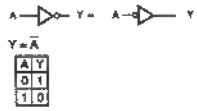

A	Y
0	1
1	0

0 ; LOW LEVEL
1 ; HIGH LEVEL

NOTE:

TYPE	VDD
74HCT04 TYPE	+5V
TC74AC04 TYPE TC74VHC04 TYPE	+2 to +5.5V
74ACT04 TYPE	+4.5 to +5.5V
OTHER TYPES	+2 to +6V

SN74HC08ANS (TI)FLAT PACKAGE
SN74HC08ANS-E05
TC74VHC08F(EL) (TOSHIBA)

C-MOS QUAD 2-INPUT AND GATES
—TOP VIEW—

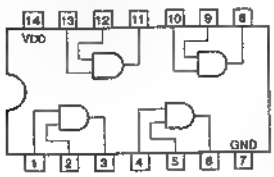

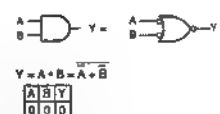

A	B	Y
0	0	0
0	1	0
1	0	0
1	1	1

0 ; LOW LEVEL
1 ; HIGH LEVEL

NOTE:

TYPE	VDD
TC74AC08 TYPE MC74ACT08M	+2 to +5.5V
TC40H	+2 to +6V
OTHER TYPES	+2 to +6V

SN74HC10ANS (TI)FLAT PACKAGE
SN74HC10ANS-E05
TC74VHC10F(EL) (TOSHIBA)

C-MOS 3-INPUT NAND GATE
-TOP VIEW-

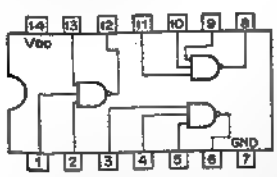

A	B	C	Y
0	0	0	1
0	0	1	1
0	1	0	1
0	1	1	1
1	0	0	1
1	0	1	1
1	1	0	1
1	1	1	0

0 ; LOW LEVEL
1 ; HIGH LEVEL

NOTE:

TYPE	VDD
TC40H	+ 2 to + 6V
OTHERS	+ 2 to + 6V

SN74HC11ANS (TI)FLAT PACKAGE
SN74HC11ANS-E05
TC74VHC11F (TOSHIBA)FLAT PACKAGE
TC74VHC11F(EL)

C-MOS 3-INPUT POSITIVE-AND GATE
—TOP VIEW—

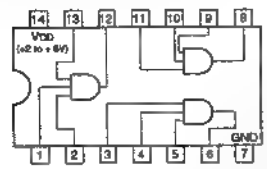

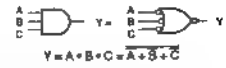

A	B	C	Y
0	0	0	0
0	0	1	0
0	1	0	0
0	1	1	0
1	0	0	0
1	0	1	0
1	1	0	0
1	1	1	1

0 ; LOW LEVEL
1 ; HIGH LEVEL

NOTE:

TYPE	VDD
TC74VHC11	+2V to + 5.5V
OTHER TYPES	+2V to + 6V

SN74HC132ANS (TI)FLAT PACKAGE
SN74HC132ANS-E05

C-MOS 2-INPUT NAND SCHMITT TRIGGER
—TOP VIEW—

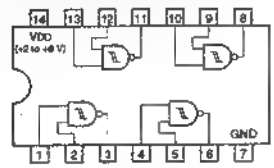

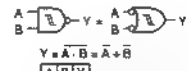

A	B	Y
0	0	1
0	1	1
1	0	1
1	1	0

0 ; LOW LEVEL
1 ; HIGH LEVEL

NOTE:

TYPE	VDD
HC	+2 to +6 V
VHC	+2 to +5.5 V

SN74HC139ANS (TI)FLAT PACKAGE
SN74HC139ANS-E05
TC74VHC139F(EL) (TOSHIBA)

C-MOS DUAL 2-TO-4 DECODER/DEMULTIPLEXER
- TOP VIEW -

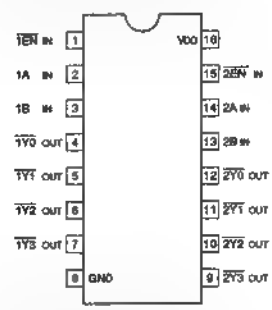

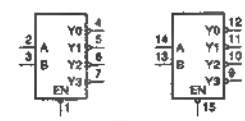

INPUTS			OUTPUTS			
EN	B	A	Y3	Y2	Y1	Y0
0	0	0	1	1	1	0
0	0	1	1	1	0	1
0	1	0	1	0	1	1
0	1	1	0	1	1	1
1	X	X	1	1	1	1

0 ; LOW LEVEL
1 ; HIGH LEVEL
X ; DON'T CARE

NOTE :

TYPE	VDD
TC74AC/TC74VHC	+2 to +5.5V
HCT/ACT	+5V
OTHER TYPES	+2 to +6V

SN74HC148ANS-E05
SN74HC148NS (TI)FLAT PACKAGE

C-MOS 8-TO-3-LINE PRIORITY ENCODER
-TOP VIEW-

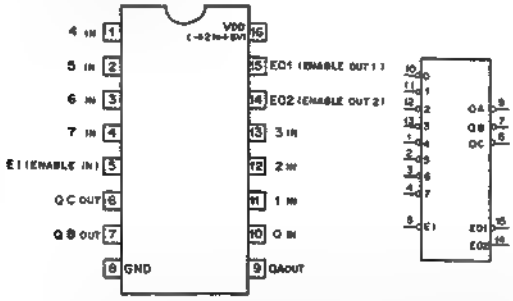

INPUTS								OUTPUTS				
EI	7	6	5	4	3	2	1	0	QC	QB	QA	EO1	EO2
1	X	X	X	X	X	X	X	X	1	1	1	1	1
0	1	1	1	1	1	1	1	1	1	1	1	0	1
0	1	1	1	1	1	1	1	0	1	1	1	1	0
0	1	1	1	1	1	1	0	X	1	1	0	1	1
0	1	1	1	1	1	0	X	X	1	0	1	1	0
0	1	1	1	1	0	X	X	X	1	0	0	1	0
0	1	1	1	0	X	X	X	X	0	1	1	1	1
0	1	1	0	X	X	X	X	X	0	1	0	1	0
0	1	0	X	X	X	X	X	X	0	0	1	1	1
1	0	X	X	X	X	X	X	X	0	0	0	1	1

0 ; LOW LEVEL 1 ; HIGH LEVEL X ; DON'T CARE

SN74HC153ANS (TI)FLAT PACKAGE
SN74HC153ANS-E05

C-MOS DUAL 4-LINE-TO-1-LINE DATA SELECTOR/MULTIPLEXER
-TOP VIEW-

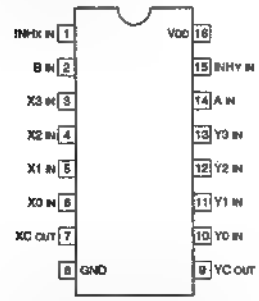

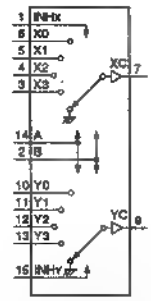

NOTE:

TYPE	VDD
ACT/HCT/FCT	+5V
4OH	+2 to +6V
TC74AC/TC74VHC	+2 to +5.5V
OTHER TYPES	+2 to +6V

CONTROL			ON
INH	B	A	CHANNEL
0	0	0	0
0	0	1	1
0	1	0	2
0	1	1	3
1	X	X	GND

0 : LOW LEVEL
1 : HIGH LEVEL
X : DON'T CARE

SN74HC14ANS (TI)FLAT PACKAGE
SN74HC14ANS-E05

C-MOS HEX SCHMITT TRIGGER INVERTERS
—TOP VIEW—

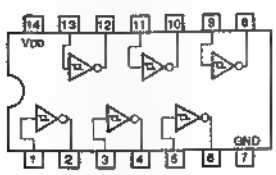

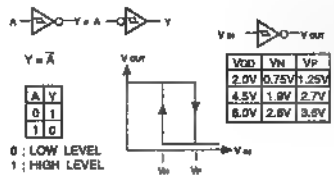

A	Y
0	1
1	0

0 ; LOW LEVEL
1 ; HIGH LEVEL

VDD	VN	VP
2.0V	0.75V	1.25V
4.5V	1.8V	2.7V
6.0V	2.6V	3.8V

NOTE:

TYPE	VDD
TC74AC/VHC	+2V to +5.5V
OTHER TYPES	+2V to +6V

SN74HC164ANS (TI)FLAT PACKAGE
SN74HC164ANS-E05
TC74VHC164F (TOSHIBA)FLAT PACKAGE
TC74VHC164F(EL)

C-MOS 8-BIT SERIAL-IN/PARALLEL-OUT SHIFT REGISTER
—TOP VIEW—

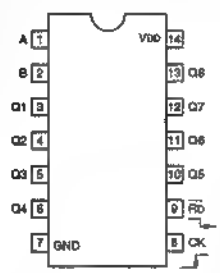

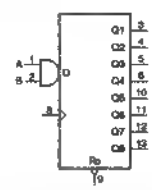

INPUTS				OUTPUTS			
RD	CK	A	B	Q1	Q2	···	Q8
0	X	X	X	0	0	0	0
1	0	X	X	Q1n	Q2n	···	Q8n
1	↑	1	1	1	Q1n	···	Q7n
1	↑	0	X	0	Q1n	···	Q7n
1	↑	X	‖	0	Q1n	···	Q7n

0 ; LOW LEVEL
1 ; HIGH LEVEL
X ; DON'T CARE

NOTE:

TYPE	VDD
AC/VHC	+2 to +5.5 V
HC	+2 to +6 V
HCT	+5 V

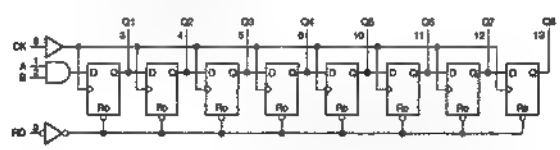

SN74HC20ANS (TI)FLAT PACKAGE
SN74HC20ANS-E05

C-MOS 4-INPUT POSITIVE-NAND GATE
—TOP VIEW—

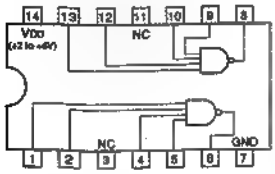

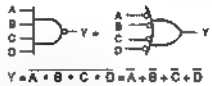

A	B	C	D	Y
0	0	0	0	1
0	0	0	1	1
0	0	1	0	1
0	0	1	1	1
0	1	0	0	1
↕	↕	↕	↕	↕
1	1	0	1	1
1	1	1	0	1
1	1	1	1	0

0 ; LOW LEVEL
1 ; HIGH LEVEL

NOTE:

TYPE	VDD
AC/VHC	+2 to +5.5V
HC	+2 to +6V

SN74HC165ANS (TI)FLAT PACKAGE
SN74HC165ANS-E05

C-MOS SERIAL-OR PARALLEL-INPUT SHIFT REGISTER

-TOP VIEW-

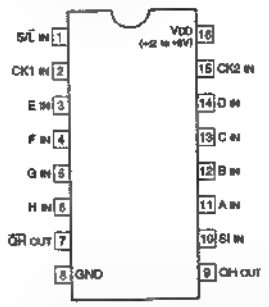

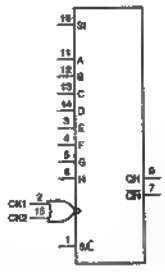

■ ; SERIAL DATA IN
A-H ; PARALLEL DATA IN
CK1,CK2 ; CLOCK IN (⎍)
S/C ; SHIFT/LOAD IN
QH QH ; 8th BIT OUT (COMPLEMENTALY)

INPUTS				CONTENTS		OUTPUT	OPERATION
S/L	CK1+CK2	SI	A——H	QA	QB——	QH	
0	X	X	a——h	a	b——	h	PARALLEL LOAD
1	⎍	0	X	0	QAo—	QGo	RIGHT SHIFT
1	⎍	1	X	1	QAo—	QGo	
1	⎍	X	X	QAo	QBo—	QHo	NO COUNT
1	0	X	X	QAo	QBo—	QHo	
1	1	X	X	QAo	QBo—	QHo	

0 ; LOW LEVEL
1 ; HIGH LEVEL
X ; DON'T CARE
a-h ; LEVEL OF INPUTS A-H
QAo-QHo ; LEVEL OF QA-QH BEFORE THE INDICATED INPUT CONDITIONS WERE ESTABLISHED

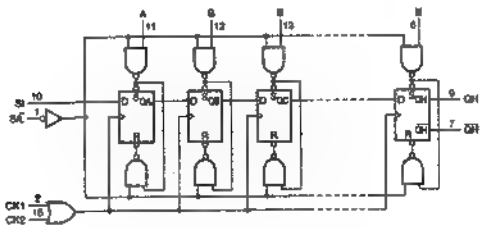

SN74HC174ANS (TI)FLAT PACKAGE
SN74HC174ANS-E05
TC74VHC174F (TOSHIBA)FLAT PACKAGE
TC74VHC174F(EL)

C-MOS D-TYPE FLIP-FLOP WITH RESET

- TOP VIEW -

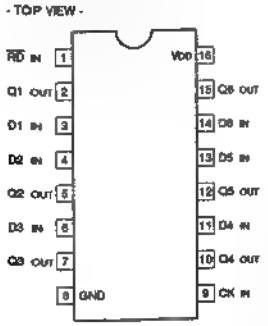

EACH FLIP-FLOP

INPUTS				OUT
RD	CK	D	Q	
0	X	X	0	
1	⎍	0	0	
1	⎍	1	1	
1	0	X	Qo	

0 ; LOW LEVEL
1 ; HIGH LEVEL
X ; DON'T CARE

NOTE :

TYPE	VDD
ACT/HCT	+5V
TC74AC/TC74VHC	+2 to +5.5V
OTHER TYPES	+2 to +6V

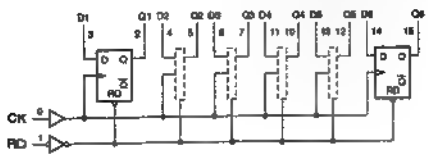

SN74HC240ANS (TI)FLAT PACKAGE
SN74HC240ANS-E05
TC74VHC240F(EL)

C-MOS 3-STATE INVERTER/LINE DRIVER

—TOP VIEW—

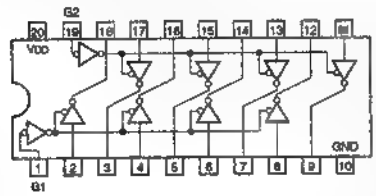

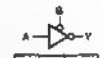

G	A	Y
0	0	1
0	1	0
1	X	HI-Z

0 ; LOW LEVEL
1 ; HIGH LEVEL
X ; DON'T CARE
HI-Z ; HIGH IMPEDANCE

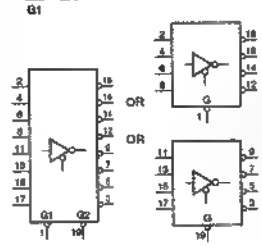

NOTE:

TYPE	VDD
74AC/74HC	+2 to +6 V
74ACT/74HCT TC74BC240F TC74BC240P	+5 V
TC74AC240F TC74AC240P TC74VHC240	+2 to +5.5 V

SN74HC244ANS (TI)FLAT PACKAGE
SN74HC244ANS-E05
SN74HCT244ANS (TI)FLAT PACKAGE
SN74HCT244ANS-E05
TC74VHC244F (TOSHIBA)FLAT PACKAGE
TC74VHC244F(EL)
TC74VHCT244F(EL) (TOSHIBA)FLAT PACKAGE

C-MOS BUS BUFFER WITH 3-STATE OUTPUTS

—TOP VIEW—

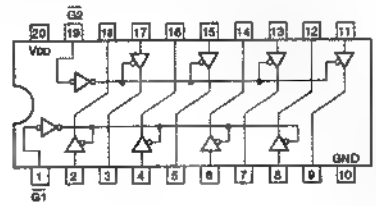

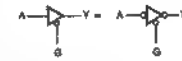

G	A	Y
0	0	0
0	1	1
X	X	HI-Z

0 ; LOW LEVEL
1 ; HIGH LEVEL
X ; DON'T CARE
HI-Z ; HIGH IMPEDANCE

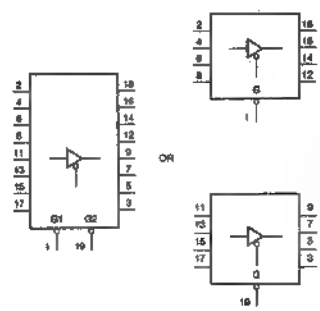

NOTE:

TYPE	VDD
AC HC 40H	+2 to +6V
ACT BCT FCT HCT	+5V
TC74AC244 TYPE TC74VHC244	+2 to +5.5V

SN74LVT245NS
SN74LVT245NS-E05
SN74HC245ANS (TI)FLAT PACKAGE
SN74HC245ANS-E05
TC74VHC245F(EL)

C-MOS BILATERAL BUS TRANSCEIVERS WITH 3-STATE OUTPUTS

-TOP VIEW-

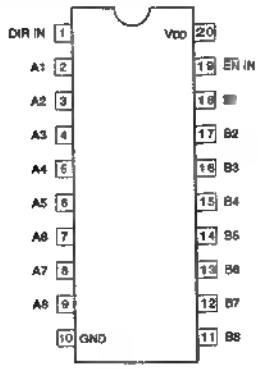

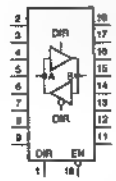

EN	DIR	OPERATION
0	0	B to A
0	1	A to B
1	X	HI-Z

0 : LOW LEVEL
1 : HIGH LEVEL
X : DON'T CARE
HI-Z : HIGH IMPEDANCE

NOTE:

TYPE	VDD
AC HC	+2 to +6V
ABT ACT BCT HCT	+5V
TC74AC245F TC74AC245P TC74VHC245	+2 to +5.5V
74LVT	+2.7 to +3.6V

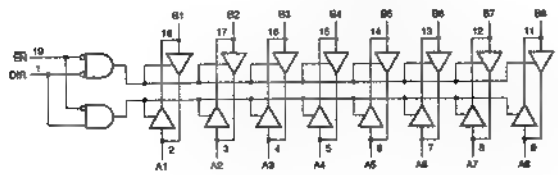

SN74HC27AN (TI)
SN74HC27ANS-E05

C-MOS 3-LINE POSITIVE-NOR GATE

-TOP VIEW-

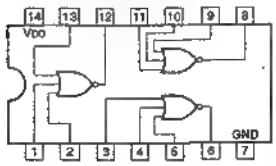

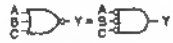

$Y = \overline{A+B+C} = \overline{A} \cdot \overline{B} \cdot \overline{C}$

A	B	C	Y
0	0	0	1
0	0	1	0
0	1	0	0
0	1	1	0
1	0	0	0
1	0	1	0
1	1	0	0
1	1	1	0

0 ; LOW LEVEL
1 ; HIGH LEVEL

NOTE :

TYPE	VDD
TC40H	+2 to +6V
OTHERS	+2 to +6V

74F32SJ
74F32SJ-T5R
SN74ALS32NS
SN74ALS32NS-E05
SN74HC32ANS (TI)FLAT PACKAGE
SN74HC32ANS-E05
TC74VHC32F(EL) (TOSHIBA)

C-MOS QUAD 2-INPUT OR GATES

—TOP VIEW—

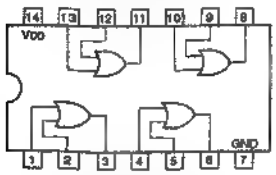

$Y = A + B = \overline{\overline{A} \cdot \overline{B}}$

A	B	Y
0	0	0
0	1	1
1	0	1
1	1	1

0 ; LOW LEVEL
1 ; HIGH LEVEL

NOTE:

TYPE	VDD
AC/VHC	+2 to +5.5V
HC	+2 to +6V

SN74HC365ANS (TI)FLAT PACKAGE
SN74HC365ANS-E05

C-MOS 3-STATE BUS DRIVER

—TOP VIEW—

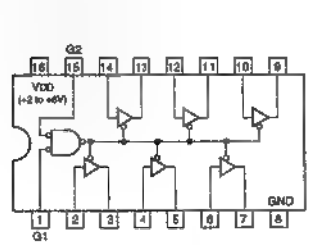

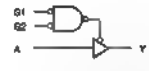

G1	G2	A	Y
0	0	0	0
0	0	1	1
0	1	X	HI-Z
1	0	X	HI-Z
1	1	X	HI-Z

0 ; LOW LEVEL
1 ; HIGH LEVEL
X ; DON'T CARE
HI-Z ; HIGH IMPEDANCE

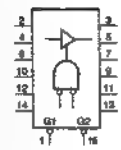

SN74HC373ANS (TI)FLAT PACKAGE
SN74HC373ANS-E05

C-MOS 3-STATE OUTPUTS OCTAL LATCHES

-TOP VIEW-

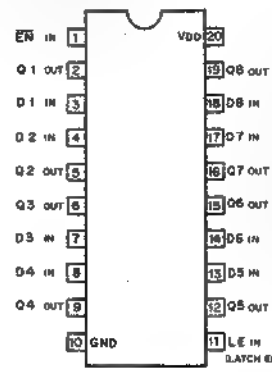

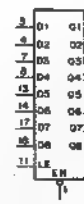

INPUTS			OUT
EN	D	LE	
0	1	1	1
0	0	1	0
0	X	0	Qo
1	X	X	HI-Z

HI-Z ; HIGH IMPEDANCE
0 ; LOW LEVEL
1 ; HIGH LEVEL
X ; DON'T CARE

NOTE :

TYPE	VDD
AC HC	+2 to +6V
ACT HCT	+5V

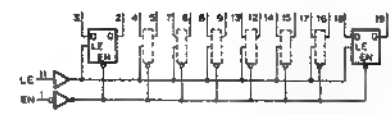

SN74HC375ANS (TI)FLAT PACKAGE
TC74HC375AF(EL)

C-MOS 4-BIT BISTABLE LATCHES

-TOP VIEW-

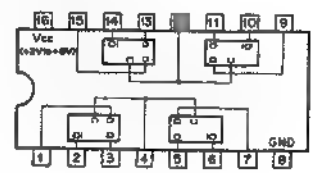

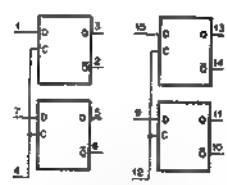

D	C	Q	$\overline{Q}$
0	1	0	1
1	1	1	0
X	0	Qo	$\overline{Q}o$

0 ; LOW LEVEL
1 ; HIGH LEVEL
X ; DON'T CARE

SN74HC377ANS (TI)
SN74HC377ANS-E05

C-MOS OCTAL D-TYPE FLIP-FLOPS WITH ENABLE
-TOP VIEW-

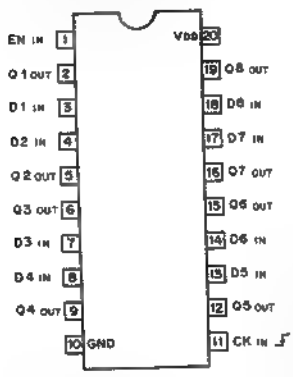

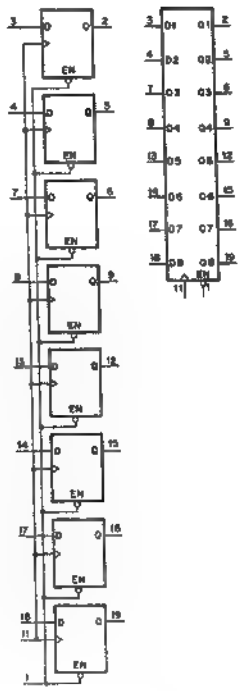

EACH FLIP-FLOP

INPUTS			OUT
EN	CK	D	
1	X	X	Q0
0	↑	1	1
0	↑	0	0
X	0	X	Q0

0 ; LOW LEVEL
1 ; HIGH LEVEL
X ; DON'T CARE

TYPE	VDD
74ACT TYPES 74FCT TYPES	+5V
OTHER TYPES	+2V to +6V

SN74HC540ANS (TI)FLAT PACKAGE
SN74HC540ANS-E05

C-MOS 3-STATE OCTAL INVERTING BUFFERS/DRIVERS
—TOP VIEW—

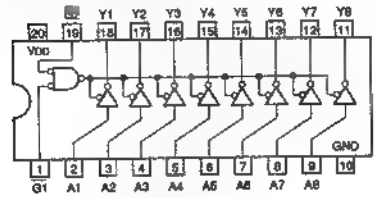

G1	G2	A	Y
0	0	0	1
0	0	1	0
1	X	X	HI-Z
X	1	X	HI-Z

0 ; LOW LEVEL
1 ; HIGH LEVEL
X ; DON'T CARE
HI-Z; HIGH IMPEDANCE

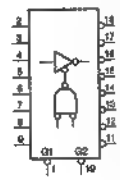

NOTE:

TYPE	VDD
HC	+2 V to +6 V
AC/VHC	+2 V to +5.5 V
HCT/ACT/VHCT	+5 V

SN74HC541ANS (TI)FLAT PACKAGE
SN74HC541ANS-E05
SN74HCT541ANS-E05
TC74ACT541FS (TOSHIBA)
TC74ACT541FS-EL
TC74VHC541F (TOSHIBA)FLAT PACKAGE
TC74VHC541F(EL)

C-MOS BUFFERS AND LINE DRIVERS WITH 3-STATE OUTPUTS
—TOP VIEW—

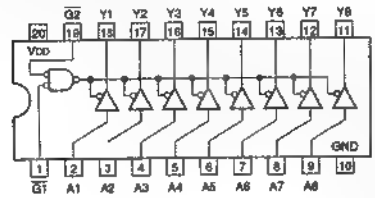

G1	G2	A	Y
0	0	0	0
0	0	1	1
1	X	X	HI-Z
X	1	X	HI-Z

0 ; LOW LEVEL
1 ; HIGH LEVEL
X ; DON'T CARE
HI-Z ; HIGH IMPEDANCE

NOTE:

TYPE	VDD
AC/VHC	+2 V to +5.5 V
HC	+2 V to +6 V
ABT/ACT/BCT/HCT/VHCT	+5 V

SN74HC393ANS (TI)FLAT PACKAGE
SN74HC393ANS-E05

C-MOS DUAL 4-BIT BINARY COUNTER
—TOP VIEW—

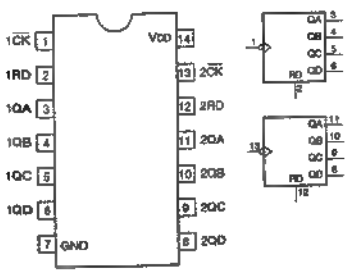

COUNT SEQUENCE

COUNT	QD	QC	QB	QA
0	0	0	0	0
1	0	0	0	1
2	0	0	1	0
3	0	0	1	1
4	0	1	0	0
5	0	1	0	1
6	0	1	1	0
7	0	1	1	1
8	1	0	0	0
9	1	0	0	1
10	1	0	1	0
11	1	0	1	1
12	1	1	0	0
13	1	1	0	1
14	1	1	1	0
15	1	1	1	1

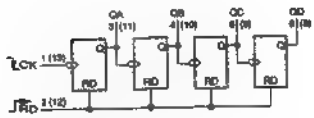

RESET/COUNT FUNCTION

RD	QD	QC	QB	QA
1	0	0	0	0
0	COUNT			

0 ; LOW LEVEL
1 ; HIGH LEVEL

NOTE:

TYPE	VDD
AC/VHC	+2 to +5.5 V
HC	+2 to +6 V

SN74HC573BNS-E05 (TI)FLAT PACKAGE

C-MOS 3-STATE OUTPUT OCTAL LATCHE

- TOP VIEW -

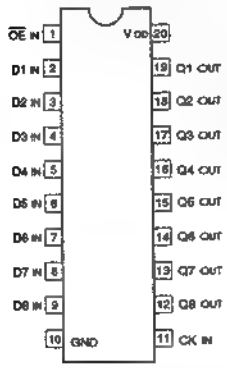

INPUT			OUTPUT
OE	CK	D	Q
0	↑	1	1
0	↑	0	0
0	0	X	Qo
1	X	X	HI-Z

0 ; LOW LEVEL
1 ; HIGH LEVEL
X ; DON'T CARE
HI-Z ; HIGH IMPEDANCE
Qo ; NO CHANGE

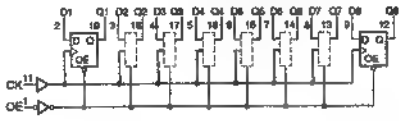

NOTE:

TYPE	VDD
AC	+2 to +6V
HC	
ABT	+5V
ACT	
HCT / VHCT	
TC74AC573	+2 to +5.5V

SN74HC574ANS (TI)FLAT PACKAGE
SN74HC574ANS-E05
SN74HCT574ANS
TC74VHC574F (TOSHIBA)FLAT PACKAGE
TC74VHC574F(EL)

C-MOS 3-STATE D-TYPE EDGE-TRIGGERED FLIP-FLOP

-TOP VIEW-

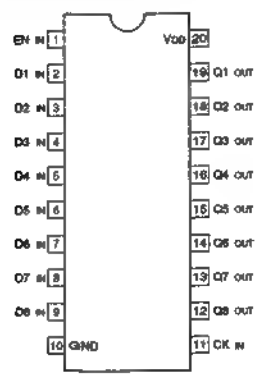

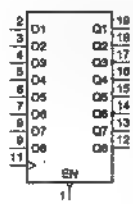

EACH FLIP-FLOP

INPUTS			OUT
EN	CK	D	Q
0	↑	1	1
0	↑	0	0
0	↓	X	Qo
1	X	X	HI-Z

0 ; LOW LEVEL
1 ; HIGH LEVEL
X ; DON'T CARE
HI-Z ; HIGH IMPEDANCE
Qo ; NO CHANGE

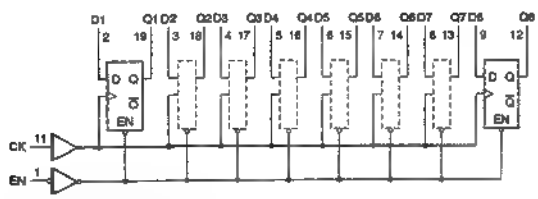

NOTE:

TYPE	VDD
HC	+2 to +6V
AC/VHC	+2 to +5.5V
ACT/FCT/AHCT	+5V

SN74HC86ANS-E05
TC74HC86AF (TOSHIBA)FLAT PACKAGE

C-MOS QUAD EXCLUSIVE OR GATES

—TOP VIEW—

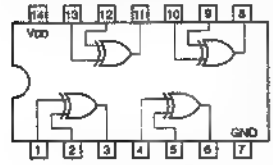

A	B	Y
0	0	0
0	1	1
1	0	1
1	1	0

0 ; LOW LEVEL
1 ; HIGH LEVEL

NOTE:

TYPE	VDD
TC74AC/VHC	+2V to +5.5V
TC74HCT	+5V
OTHER TYPES	+2V to +6V

SN74LS05NS-E05 (TI)

TTL INVERTER WITH OPEN-COLLECTOR

-TOP VIEW-

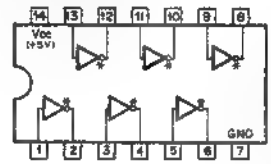

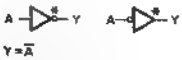

A	Y
0	1
1	0

0 : LOW LEVEL
1 : HIGH LEVEL
* ; OPEN COLLECTOR

SN74LS06N (TI)

TTL INVERTER BUFFER/DRIVER WITH OPEN-COLLECTOR

—TOP VIEW—

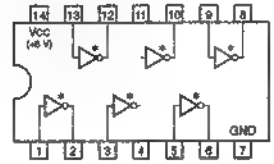

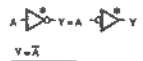

A	Y
0	1
1	0

0 ; LOW LEVEL
1 ; HIGH LEVEL
* ; OPEN COLLECTOR

SN74LS123NS (TI)FLAT PACKAGE
SN74LS123NS-E05 (TI)FLAT PACKAGE

TTL RETRIGGERABLE MONOSTABLE MULTIVIBRATORS WITH DIRECT RESET

—TOP VIEW—

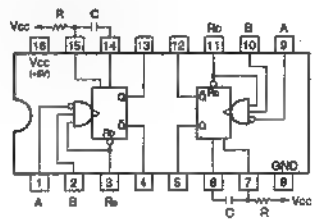

INPUTS			OUTPUTS	
Rb	A	B	Q	$\overline{Q}$
0	X	X	0	1
X	↑	X	0	1
X	X	↓	0	1
1	↓	↑	⊓	⊔
1	↓	1	⊓	⊔
1	0	↑	⊓	⊔

0 ; LOW LEVEL
1 ; HIGH LEVEL
X ; DON'T CARE

OUTPUT PULSE WIDTH

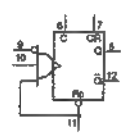

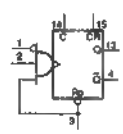

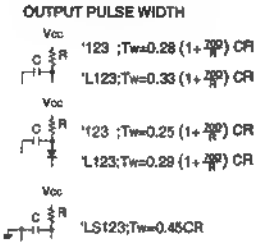

SN74LS164NS (TI)FLAT PACKAGE
SN74LS164NS-E05

TTL 8-BIT PARALLEL-OUT SERIAL SHIFT REGISTER

-TOP VIEW-

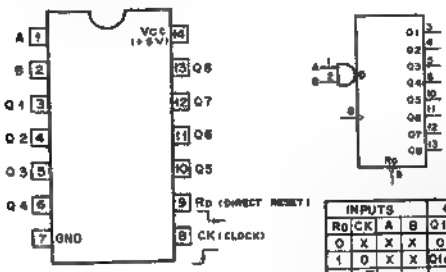

INPUTS				OUTPUTS			
Rd	CK	A	B	Q1	Q2	----	Q8
0	X	X	X	0	0	0	0
1	0	X	X	Q1o	Q2o	----	Q8o
1	↑	1	1	1	Q1n	----	Q7n
1	↑	0	X	0	Q1n	----	Q7n
1	↑	X	0	0	Q1n	----	Q7n

0;LOW LEVEL
1;HIGH LEVEL
X;DON'T CARE

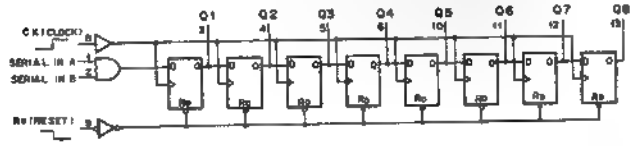

SN74LS165ANS (TI)FLAT PACKAGE
SN74LS165ANS-E05

TTL PARALLEL-LOAD OR SERIAL-IN 8-BIT SHIFT REGISTER

-TOP VIEW-

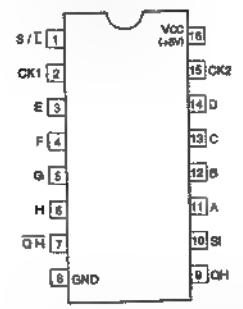

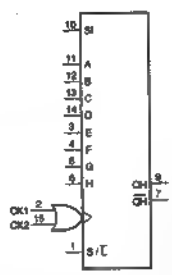

SI ; SERIAL DATA IN
A–H ; PARALLEL DATA
CK1, CK2 ; CLOCK IN (↑)
S/L ; SHIFT / LOAD IN
QH, $\overline{QH}$; 8th BIT OUT (COMPLEMENTALY)

INPUTS				CONTENTS		OUTPUT	OPERATION
S/L	CK1 + CK2	SI	A·····H	QA	QB·····	QH	
0	X	X	a·····h	a	b·····	h	PARALLEL LOAD
1	↑	0	X	a	QAo....	QGo	RIGHT SHIFT
1	↑	1	X	1	QAo....	QGo	
1	1	X	X	QAo	QBo....	QHo	NO COUNT
1	0	X	X	QAo	QBo....	QHo	
1	↑	X	X	QAo	QBo....	QHo	

0 ; LOW LEVEL 1 ; HIGH LEVEL X ; DON'T CARE

a–h ; LEVEL OF INPUTS A–H

QAo–QHo ; LEVEL OF QA–QH BEFORE THE INDICATED INPUT CONDITIONS WERE ESTABLISHED

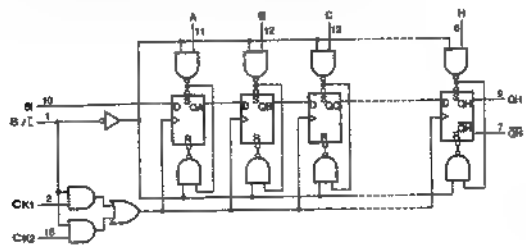

SN74LS30NS-E05 (TI)

TTL 8-INPUT POSITIVE-NAND GATE

-TOP VIEW-

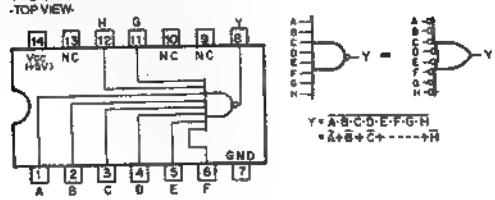

SN74LS628NS (TI)
SN74LS628NS-E20

TTL VOLTAGE-CONTROLLED OSCILLATOR

-TOP VIEW-

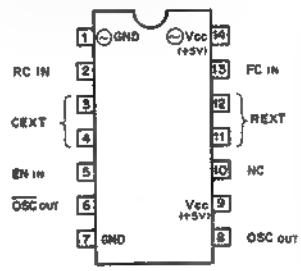

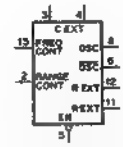

EN	OSC	$\overline{OSC}$
0	ENABLE	ENABLE
1	0	1

0 ; LOW LEVEL
1 ; HIGH LEVEL

SN74LS684NS (TI)FLAT PACKAGE

TTL 8-BIT MAGNITUDE COMPARATOR\WITH TOTEM-POLE OUTPUTS

-TOP VIEW-

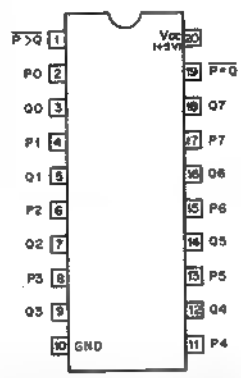

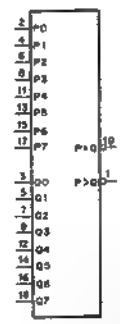

DATA INPUTS		OUTPUTS	
P0 - P7	Q0 - Q7	P=Q	P>Q
P=Q		0	1
P>Q		1	0
P<Q		1	1

1 ; HIGH LEVEL
0 ; LOW LEVEL

INPUT/OUTPUT CONFIGURATION

TYPE	INPUT	OUTPUT
LS682	WITH 20K-OHM	TOTEM-POLE
LS683	PULL UP	OPEN-COLLECTOR
LS684	WITHOUT	TOTEM-POLE
LS685	PULL UP	OPEN-COLLECTOR

SSM-2142P (PMI)

BALANCED LINE DRIVER
-TOP VIEW-

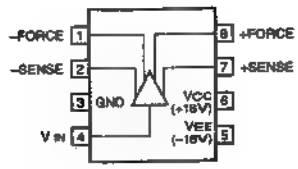

TC4051BFHB (TOSHIBA)FLAT PACKAGE
TC4051BFHB-TP2

C-MOS 8-CHANNEL ANALOG MULTIPLEXER/DEMULTIPLEXER
-TOP VIEW-

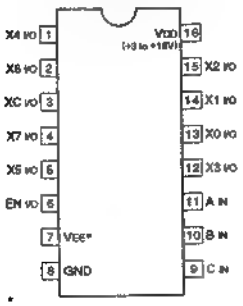

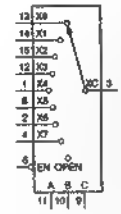

CONTROL INPUTS				SELECTED CHANNEL
EN	SELECT C	B	A	
0	0	0	0	X0
0	0	0	1	X1
0	0	1	0	X2
0	0	1	1	■
0	1	0	0	X4
0	1	0	1	X5
0	1	1	0	X6
0	1	1	1	X7
1	X	X	X	OPEN

X0 to X7 ; ANALOG INPUTS/OUTPUTS
XC ; COMMON INPUT/OUTPUT
A,B,C ; CHANNEL SELECT INPUT
EN ; ENABLE INPUT

0 ; LOW LEVEL
1 ; HIGH LEVEL
X ; DON'T CARE

* VEE ; VDD−VEE=+3 to +18V

TC4S66F (TOSHIBA)CHIP PACKAGE
TC4S66F(TE85R)

C-MOS BILATERAL ANALOG SWITCH
-TOP VIEW-

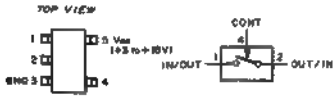

CONT	SWITCH
0	OFF
1	ON

0 ; LOW LEVEL
1 ; HIGH LEVEL

TC4W53F (TE12R)
TC4W53F (TOSHIBA)CHIP PACKAGE(5.0 X 3.1)

C-MOS 2-CHANNEL MULTIPLEXER / DEMULTIPLEXER

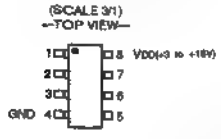

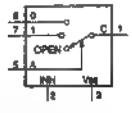

CONT.INPUT		ON CHANNEL
INH	A	
0	0	0
0	1	1
1	X	OPEN

0 ; LOW LEVEL
1 ; HIGH LEVEL
X ; DON'T CARE

TC5081AP (TOSHIBA)

C-MOS PHASE COMPARATOR
-SIDE VIEW-

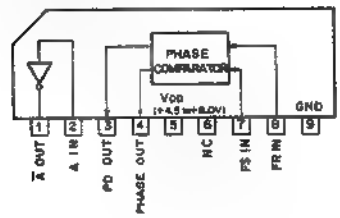

PHASE COMPARATOR TIMING CHART

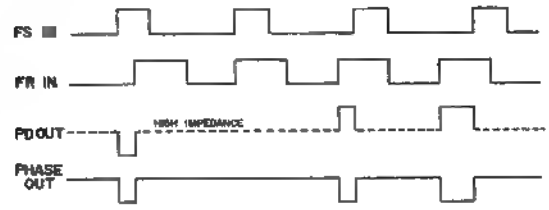

TC74HC221AF (TOSHIBA)FLAT PACKAGE
TC74HC221AF(EL)

C-MOS MONOSTABLE MULTIVIBRATOR WITH SCHMITT TRIGGER INPUT
—TOP VIEW—

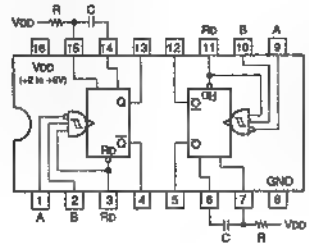

INPUTS			OUTPUTS	
Rd	A	B	Q	$\overline{Q}$
0	X	X	0	1
X	1	X	0	1
X	X	0	0	1
1	0	↑	⎍	⎍
1	↓	1	⎍	⎍
↑	0	1	⎍	⎍

0 ; LOW LEVEL
1 ; HIGH LEVEL
X ; DON'T CARE

OUTPUT PULSE WIDTH ≈ 0.7CR

TC74HC4538AF (TOSHIBA)FLAT PACKAGE
TC74HC4538AF(EL)

C-MOS DUAL RETRIGGERABLE/NON-RETRIGGERABLE MONOSTABLE MULTIVIBRATOR
-TOP VIEW-

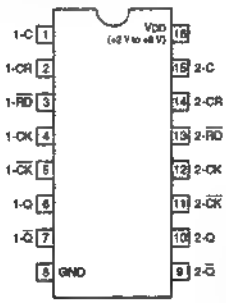

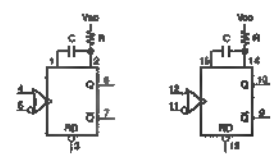

OUTPUT PULSE WIDTH ≈ k · C · R

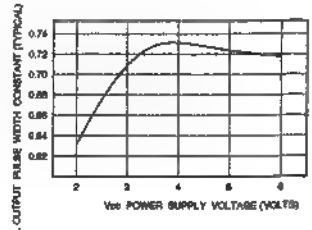

RETRIGGERABLE M. M. V

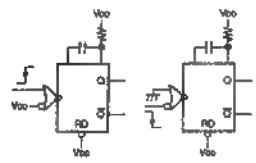

NON-RETRIGGERABLE M. M. V

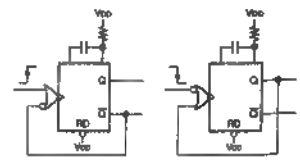

TC74HCT174AF (TOSHIBA)

C-MOS HEX D-TYPE FLIP FLOP WITH CLEAR

-TOP VIEW-

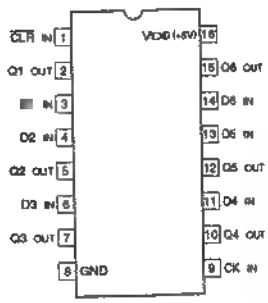

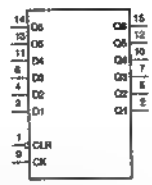

INPUTS			OUTPUT	FUNCTION
CLR	D	CK	■	
0	X	X	0	CREAR
1	0	↑	0	—
1	1	↑	1	—
1	X	↓	Qn	NO CHANGE

0 ; LOW LEVEL
1 ; HIGH LEVEL
X ; DON'T CARE

INPUT
CK ; CLOCK
CLR ; CLEAR
D1 - D6 ; DATA

OUTPUT
Q1 - Q6 ; DATA

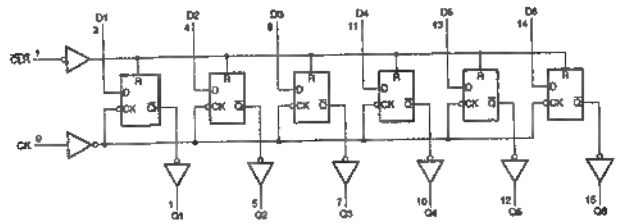

TD62503F (TOSHIBA)FLAT PACKAGE

TRANSISTOR ARRAY, INVERTING DRIVER WITH OPEN COLLECTOR

-TOP VIEW-

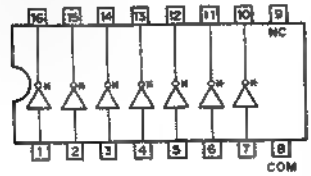

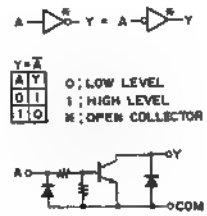

TL082CPS-E05
TL082M (TI)

OPERATIONAL AMPLIFIER
(J FET INPUT)

—TOP VIEW—

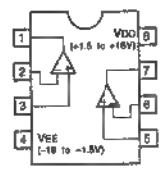

TC74VHC161F(EL) (TOSHIBA)

C-MOS SYNCHRONOUS PRESETTABLE 4-BIT BINARY COUNTER

-TOP VIEW-

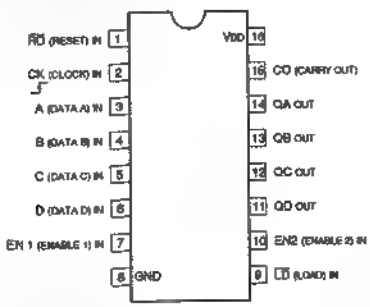

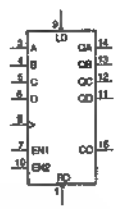

MODE SELECTION

CONTROL INPUTS				MODE
RD	LD	EN1	EN2	
0	X	X	X	RESET (ASYNCHRONOUS)
1	0	X	X	PRESET (SYNCHRONOUS)
1	1	0	X	NO COUNT
1	1	X	0	NO COUNT
1	1	↑	1	COUNT

0 ; LOW LEVEL
↑ ; HIGH LEVEL
X ; DON'T CARE

COUNT SEQUENCE

COUNT	OUTPUTS			
	QD	QC	QB	QA
0	0	0	0	0
1	0	0	0	1
2	0	0	1	0
3	0	0	1	1
4	0	1	0	0
5	0	1	0	1
6	0	1	1	0
7	0	1	1	1
8	1	0	0	0
9	1	0	0	1
10	1	0	1	0
11	1	0	1	1
12	1	1	0	0
13	1	1	0	1
14	1	1	1	0
15	1	1	1	1

CARRY OUTPUT "CO"

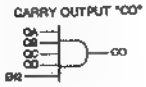

CO IS HIGH WHEN EN2 INPUT ■
HIGH AND COUNT IS "15".

NOTE:

TYPE	VDD
74ACT	+5 V
TC40H	+2 to +6 V
OTHERS	+2 to +6 V

TL431CLP (TI)
TL431CLP-Z

ADJUSTABLE PRECISION SHUNT REGULATOR

-TOP VIEW-

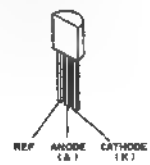

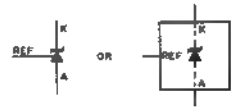

TL431CPS (TI)FLAT PACKAGE
TL431CPS-E05

ADJUSTABLE PRECISION SHUNT REGULATOR

-TOP VIEW-

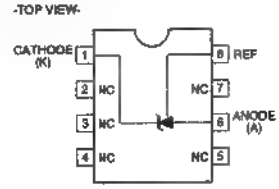

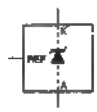

TL7705CPS-B (TI)FLAT PACKAGE
TL7705CPS-B-E05

POWER VOLTAGE SUPERVISOR
—TOP VIEW—

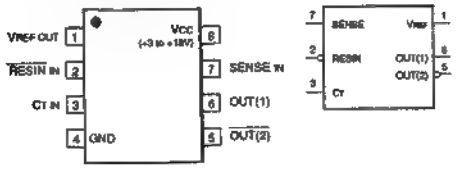

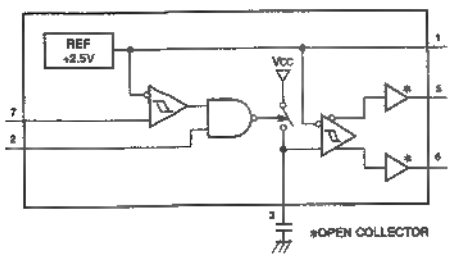

TLC2932IPW-E20 (TI)

C-MOS VCO AND PHASE FREQUENCY DETECTOR
- TOP VIEW -

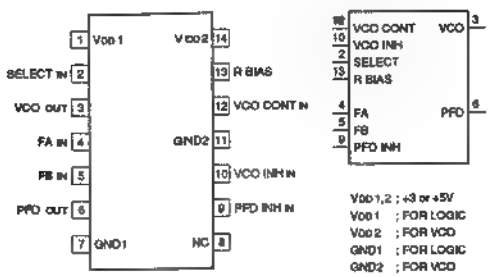

VDD1,2 ; +3 or +5V
VDD1 ; FOR LOGIC
VDD2 ; FOR VCO
GND1 ; FOR LOGIC
GND2 ; FOR VCO

INPUT
FA ; REFERENCE FREQUENCY
FB ; INPUT FREQUENCY FROM OUTSIDE COUNTER
PFD INH ; PFD INHIBIT
SELECT ; VCO OUTPUT FREQUENCY SELECT
VCO CONT ; VCO CONTROL VOLTAGE
VCO INH ; VCO INHIBIT

OUTPUT
PFD ; PHASE FREQUENCY DETECTOR
VCO ; VOLTAGE CONTROLLED OSCILLATOR

OTHER
R BIAS ; BIAS RESISTOR FOR VCO OSCILLATION FREQUENCY SETTING

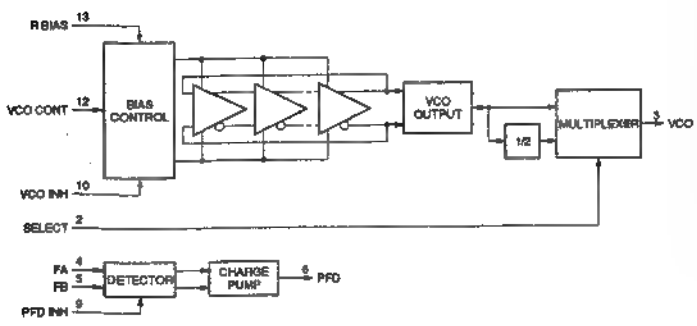

TLC27L2CPS (TI)FLAT PACKAGE
TLC27L2CPS-ELL2000

OPERATIONAL AMPLIFIER
—TOP VIEW—

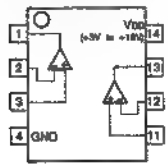

TLC5733IPM (TI)

C-MOS 8-BIT 3CHANNEL SEMI-FLASH A/D CONVERTER
-TOP VIEW-

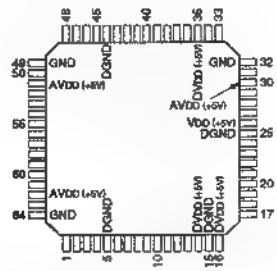

(DVDD, AVDD = +5 V)

PIN No.	I/O	SIGNAL	PIN No.	I/O	SIGNAL	PIN No.	I/O	SIGNAL	PIN No.	I/O	SIGNAL	PIN No.	I/O	SIGNAL
1	I	VRB (A)	14	—	DVDD (QA)	27	—	IBIAS (C)	40	O	D (C) 4	53	I	CLPV (B)
2	I	OE (A)	15	—	DGND (QB)	28	I	CLPV (C)	41	O	D (C) 3	54	—	IBIAS (B)
3	I	NT/PAL	16	—	DVDD (QB)	29	I	VRT (C)	42	O	D (C) 2	55	I	EXTCLP
4	I	TEST	17	O	D (B) 8	30	—	AVDD (C)	43	O	D (C) 1	56	I	CLK
5	—	DGND (QA)	18	O	D (B) 7	31	I	VIN (C)	44	—	DGND (QC)	57	I	CLPEN
6	O	D (A) 8	19	O	D (B) 6	32	—	GND (C)	45	I	MODE1	58	I	XSYNC
7	O	D (A) 7	20	O	D (B) 5	33	I	VRB (C)	46	I	MODE0	59	—	IBIAS (A)
8	O	D (A) 6	21	O	D (B) 4	34	I	OE (C)	47	I	OE (B)	60	I	CLPV (A)
9	O	D (A) 5	22	O	D (B) 3	35	—	DVDD (QC)	48	I	VRB (B)	61	I	VRT (A)
10	O	D (A) 4	23	O	D (B) 2	36	O	D (C) 8	49	—	GND (B)	62	—	AVDD (A)
11	O	D (A) 3	24	O	D (B) 1	37	O	D (C) 7	50	I	VIN (B)	63	I	VIN (A)
12	O	D (A) 2	25	—	DGND	38	O	D (C) 6	51	—	AVDD (B)	64	—	GND (A)
13	O	D (A) 1	26	—	DVDD	39	O	D (C) 5	52	I	VRT (B)			

INPUT
CLK ; CLOCK
CLPEN ; CLAMP ENABLE FOR INTERNAL CLAMP CIRCUIT
CLPV (A) - CLPV (C) ; CLAMPING LEVEL OF ADC
EXTCLP ; EXTERNAL CLAMP PULSE
MODE0, MODE1 ; OUTPUT FORMAT MODE SELECT
NT/PAL ; NTSC/PAL CONTROL (NTSC = 0, PAL = 1)
OE (A) - OE (C) ; OUTPUT ENABLE OF DATA
TEST ; TEST = 1, DEVICE = 0
VIN (A) - VIN (C) ; ANALOG INPUT OF ADC
VRB (A) - VRB (C) ; REFERENCE VOLTAGE BOTTOM OF ADC
VRT (A) - VRT (C) ; REFERENCE VOLTAGE TOP OF ADC
XSYNC ; OUTPUT SYNCHRONOUS

OUTPUT
D (A) 1 - D (A) 8 ; DATA OUTPUT OF ADC A
D (B) 1 - D (B) 8 ; DATA OUTPUT OF ADC B
D (C) 1 - D (C) 8 ; DATA OUTPUT OF ADC C

OTHER
DGND ; DIGITAL GROUND
DGND (QA) - DGND (QC) ; DIGITAL GROUND FOR OUTPUT OF ADC
GND (A) - GND (C) ; GROUND OF ADC
IBIAS (A) - IBIAS (C) ; CLAMPING BIAS CURRENT OF ADC
AVDD (A) - AVDD (C) ; ANALOG VDD OF ADC
DVDD ; DIGITAL VDD
DVDD (QA) - DVDD (QC) ; DIGITAL VDD FOR OUTPUT OF ADC

0 ; LOW LEVEL
1 ; HIGH LEVEL

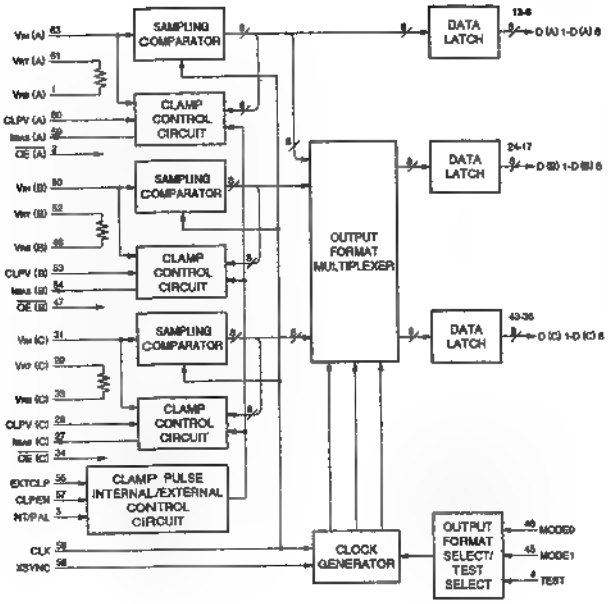

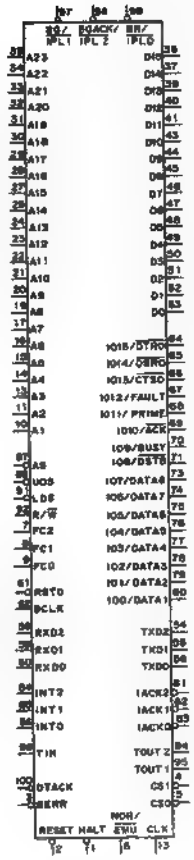

INPUT	
BCLK	; BAUD RATE CLOCK
CLK	; CLOCK
INT0 – 2	; INTERRUPT REQUESTS
NOR/EMU	; MODE SELECT
RXD0 – 2	; RECEIVE DATA
TIN	; TIMER INPUT
OUTPUT	
BG (/IPL1)	; BUS GROUND
CS0, 1	; CHIP SELECTS
IACK0 – 2	; INTERRUPT ACKNOWLEDGE
TOUT1, 2	; TIMER OUTPUTS
TXD0 – 2	; TRANSFER DATA
INPUT/OUTPUT	
A1 – 23	; ADDRESS BUS
ACK	; I/O PORT
AS	; ADDRESS STROBE
BERR	; BUS ERROR
BGACK (/IPL2)	; BUS GROUND ACKNOWLEDGE
BR (/IPL0)	; BUS REQUEST
BUSY	; I/O PORT
CTS0, DSR0, DTR0, DSTB	; I/O PORTS
D0 – 16	; DATA BUS
DATA1 – 8	; I/O PORTS
DTACK	; DATA TRANSFER ACKNOWLEDGE
FAULT	; I/O PORT
FC0 – 2	; FUNCTION CORDS
HALT	; HALT
I00 – 15	; I/O PORT
LDS	; LOWER DATA STROBE
PRIME	; I/O PORT
RESET	; RESET
RST0	; TRANSFER REQUEST
R/W	; READ/WRITE
UDS	; UPPER DATA STROBE

TMP68301AFR-16 (TOSHIBA)

C-MOS 16-BIT MICRO COMPUTER

-TOP VIEW-

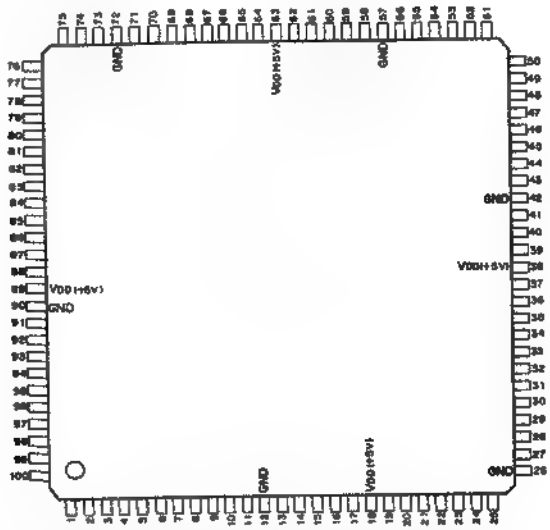

(Vcc = +5V)

PIN No.	I/O	SIGNAL	PIN No.	I/O	SIGNAL	PIN No.	I/O	SIGNAL	PIN No.	I/O	SIGNAL
1	I/O	HALT	26	–	GND	[illegible]	I/O	D2	76	I/O	IO4/DATA5
2	I/O	RESET	27	I/O	A15	52	I/O	D1	77	I/O	IO3/DATA4
3	I/O	BERR	28	I/O	A16	53	I/O	D0	78	I/O	IO2/DATA3
4	O	CS1	29	I/O	A17	54	O	TXD2	79	I/O	IO1/DATA2
5	O	CS0	30	I/O	A18	55	O	TXD1	80	I/O	IO0/DATA1
6	I	NOR/EMU	31	I/O	A19	56	O	TXD0	81	O	IACK2
7	I/O	FC2	32	I/O	A20	57	–	GND	82	[illegible]	IACK1
8	I/O	FC1	33	I/O	A21	58	I	RXD2	83	O	IACK0
9	I/O	FC0	34	I/O	A22	59	I	RXD1	84	I	INT2
10	I/O	A1	35	I/O	A23	60	I	RXD0	85	I	INT1
11	I/O	A2	36	I/O	D15	[illegible]	I/O	RST0	86	I	INT0
12	–	GND	37	I/O	D14	62	I	BCLK	87	I/O	AS
13	I/O	A3	38	–	Vcc	63	–	Vcc	88	I/O	UDS
[illegible]	I/O	A4	39	I/O	D13	64	I/O	IO15/DTR0	89	–	Vcc
15	I/O	A5	40	I/O	D12	65	I/O	IO14/DSR0	90	–	GND
16	I/O	A6	41	I/O	D11	66	I/O	IO13/CTS0	91	I/O	LDS
17	I/O	A7	42	–	GND	67	I/O	IO12/FAULT	92	I/O	R/W
18	–	Vcc	43	I/O	D10	[illegible]	I/O	IO11/PRIME	93	I	CLK
19	I/O	A8	44	I/O	D9	[illegible]	I/O	IO10/ACK	94	O	TOUT2
20	I/O	A9	45	I/O	[illegible]	70	I/O	IO9/BUSY	95	O	TOUT1
21	I/O	A10	46	I/O	[illegible]	71	I/O	IO8/DSTB	96	I	TIN
22	I/O	A11	47	I/O	D8	72	–	GND	97	O	BG/IPL1
23	I/O	A12	48	I/O	D5	73	I/O	IO7/DATA8	98	I/O	BGACK/IPL2
24	I/O	A13	49	I/O	D4	74	I/O	IO6/DATA7	99	I/O	BR/IPL0
25	I/O	A14	50	I/O	D3	75	I/O	IO5/DATA6	100	I/O	DTACK

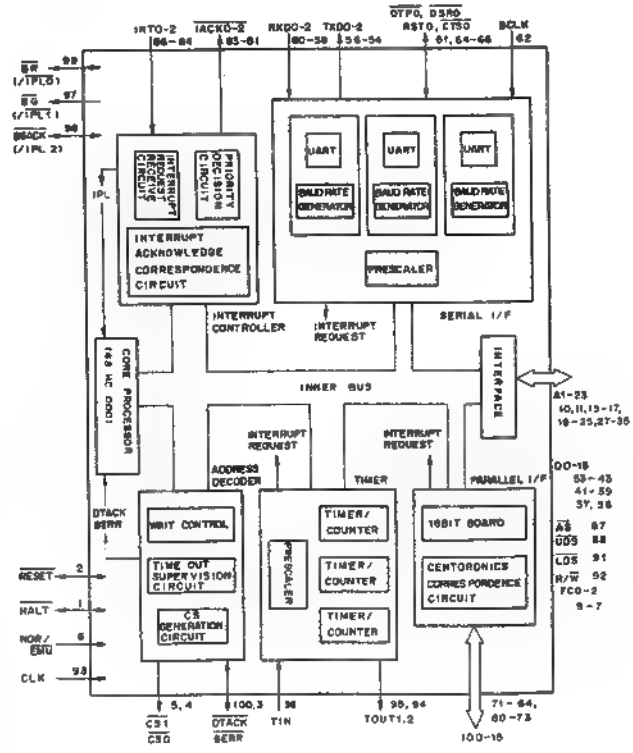

UC3854N (UNITRODE INTEGRATED CIRCUITS)

BI-POLAR HIGH POWER FACTOR PRE-REGULATOR
-TOP VIEW-

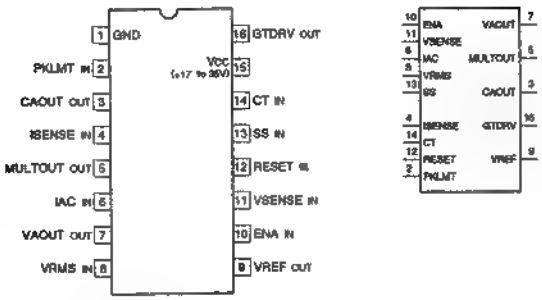

INPUT
CT ; OSCILLATOR TIMING CAPACITOR
ENA ; ENABLE
IAC ; AC CURRENT
ISENSE ; INVERSION CURRENT SENSE
PKLMT ; PEAK LIMIT
RESET ; OSCILLATOR CHARGE CURRENT, MULTIPLIER LIMIT SET
SS ; SOFT START
VRMS ; RMS LINE VOLTAGE
VSENSE ; INVERSION VOLTAGE AMPLIFIER

OUTPUT
CAOUT ; CURRENT AMPLIFIER
GTDRV ; GATE DRIVE
MULTOUT ; MULTIPLIER, INVERSION CURRENT SENSE TO ISENSE
VAOUT ; VOLTAGE AMPLIFIER
VREF ; VOLTAGE REFERENCE

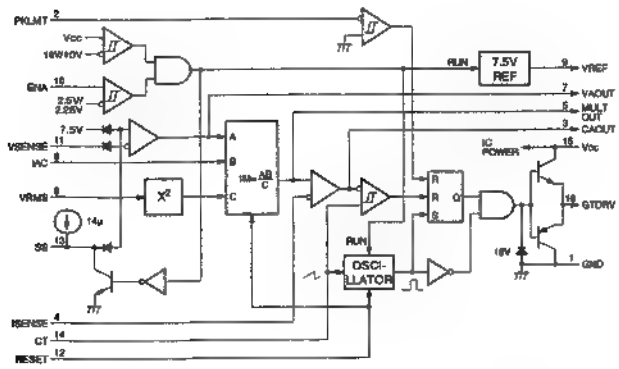

UPD42101G-3 (NEC)FLAT PACKAGE

C-MOS 7K(910x8)-BIT FIFO MEMORY
-TOP VIEW-

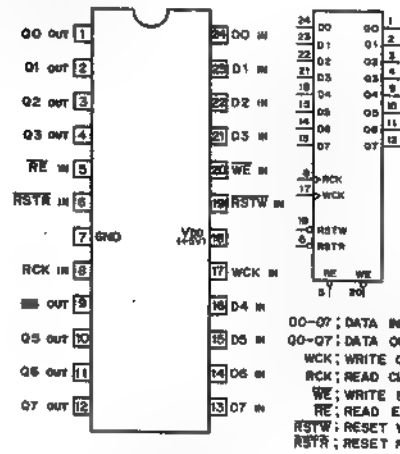

D0–D7 ; DATA INPUTS
Q0–Q7 ; DATA OUTPUTS
WCK ; WRITE CLOCK INPUT
RCK ; READ CLOCK INPUT
WE ; WRITE ENABLE INPUT
RE ; READ ENABLE INPUT
RSTW ; RESET WRITE INPUT
RSTR ; RESET READ INPUT

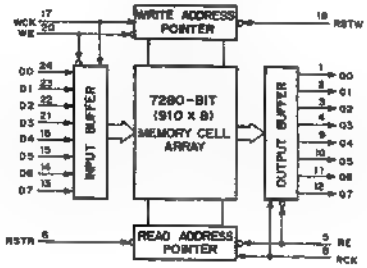

UPC1037HA (NEC)

DOUBLE-BALANCED MODULATOR
-SIDE VIEW-

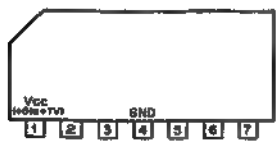

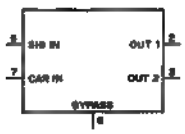

UPD482445G5-60-7JG (NEC)

C-MOS 4M-BIT DUALPORT GRAPHICS BUFFER

-TOP VIEW-

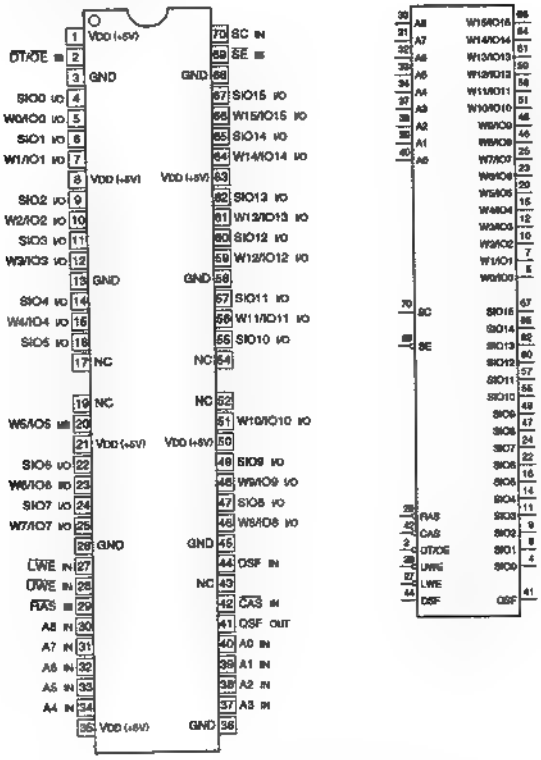

INPUT

A0 - A8	; ADDRESS
CAS	; COLUMN ADDRESS STROBE
DSF	; SPECIAL FUNCTION ENABLE
DT/OE	; DATA TRANSFER/OUTPUT ENABLE
LWE	; WRITE ENABLE
RAS	; ROW ADDRESS STROBE
SC	; SERIAL CLOCK
SE	; SERIAL DATA INPUT/OUTPUT ENABLE
UWE	; WRITE PER BIT

OUTPUT

QSF	; SPECIAL FUNCTION

INPUT/OUTPUT

SIO0 - SIO15	; SERIAL DATA
W0/IO0 - W15/IO15	; DATA

UPD70116C (NEC)
UPD70116C-10
UPD70116GC-10-3B6 (NEC)

C-MOS 16-BIT MICROPROCESSOR

-TOP VIEW-

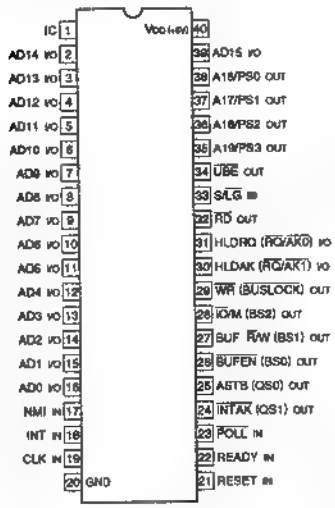

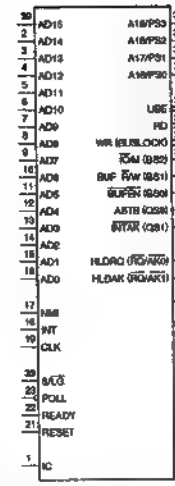

INPUT

CLK	; CLOCK
HLDRQ	; HOLD REQUEST
INT	; MASKABLE INTERRUPT
NMI	; NON-MASKABLE INTERRUPT
POLL	; POLL CHECK
READY	; READ/WRITE CYCLE EXPANDER
RESET	; CPU RESET
S/LG	; SMALL/LARGE

INPUT/OUTPUT

AD0-AD15	; ADDRESS/DATA BUS
RQ/AK0, RQ/AK1	; HOLD REQUEST IN/ ACKNOWLEDGE OUT

OTHER

IC	; INTERNALLY CONNECTED

OUTPUT

A19/PS0 - A19/PS3	; ADDRESS BUS/ PROCESSOR STATUS
ASTB	; ADDRESS STROBE
BS0-BS2	; BUS STATUS
BUFEN	; BUFFER ENABLE
BUF R/W	; BUFFER READ/WRITE
BUSLOCK	; BUS LOCK
HLDAK	; HOLD ACKNOWLEDGE
INTAK	; INTERRUPT ACKNOWLEDGE
IO/M	; IO/MEMORY
QS0, QS1	; QUEUE STATUS
RD	; READ STROBE
UBE	; UPPER BYTE ENABLE
WR	; WRITE STROBE

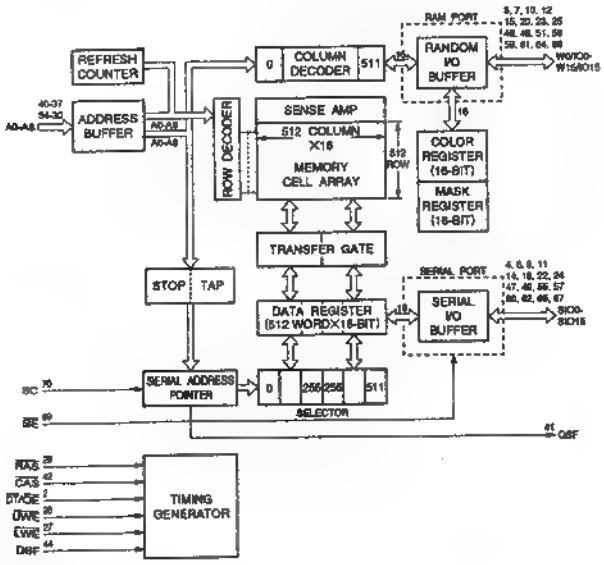

INPUT

A0 - A8	; ADDRESS
CAS	; COLUMN ADDRESS STROBE
DSF	; SPECIAL FUNCTION ENABLE
DT/OE	; DATA TRANSFER/OUTPUT ENABLE
LWE	; WRITE ENABLE
RAS	; ROW ADDRESS STROBE
SC	; SERIAL CLOCK
SE	; SERIAL DATA INPUT/OUTPUT ENABLE
UWE	; WRITE PER BIT

OUTPUT

QSF	; SPECIAL FUNCTION

INPUT/OUTPUT

SIO0 - SIO15	; SERIAL DATA
W0/IO0 - W15/IO16	; DATA

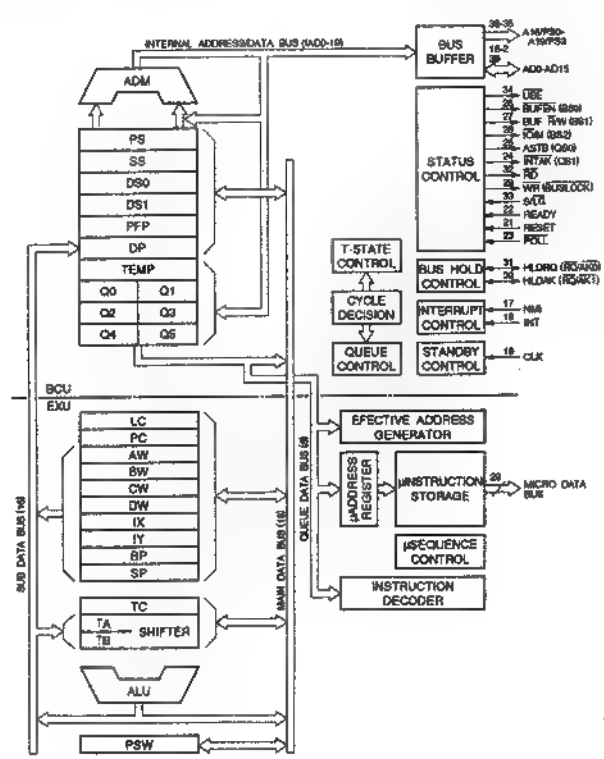

UPD71051C-10 (NEC)

C-MOS SERIAL CONTROL UNIT

-TOP VIEW-

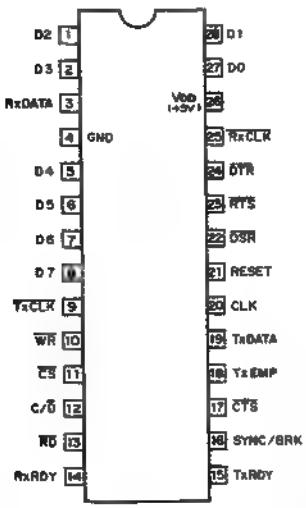

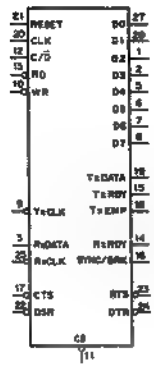

CLK	:CLOCK
$\overline{CS}$	:CHIP SELECT
$\overline{CTS}$	:CLEAR TO SEND
C/$\overline{D}$	:CONTROL OR DATA
D0~7	:DATA BUS
$\overline{DSR}$	:DATA SET READY
$\overline{DTR}$	:DATA TERMINAL READY
$\overline{RD}$	:READ STROBE
RESET	:RESET
$\overline{RTS}$	:REQUEST TO SEND
RXCLK	:RECEIVER CLOCK
RXDATA	:RECEIVE DATA
RxRDY	:RECEIVER READY
SYNC/BRK	:SYNCRONIZATION/BREAK
TXCLK	:TRANSMITTER CLOCK
TXDATA	:TRANSMIT DATA
TXEMP	:TRANSMITTER EMPTY
TXRDY	:TRANSMITTER READY
$\overline{WR}$	:WRITE STROBE

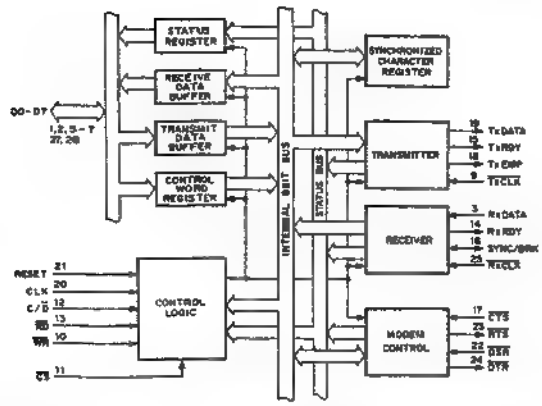

$\overline{CS}$	$\overline{RD}$	$\overline{WR}$	C/$\overline{D}$	MODE	FUNCTION
0	0	1	0	RECEIVE DATA BUFFER--> DATA BUS	READ RECEIVE DATA
0	0	1	1	STATUS REGISTER--> DATA BUS	READ STATUS
0	1	0	0	DATA BUS--> TRANSKIT DATA BUFFER	WRITE RECEIVE DATA
0	1	0	1	DATA BUS--> CONTROL WORD REGISTER	WRITE CONTROL WORD
0	1	1	X	DATA BUS:HIGH IMPEDANCE	
1	X	X	X	DATA BUS:HIGH IMPEDANCE	

1:HIGH LEVEL
0:LOW LEVEL
X:DON'T CARE

UPD71054C-10 (NEC)

C-MOS PROGRAMMABLE TIMER COUNTER

-TOP VIEW-

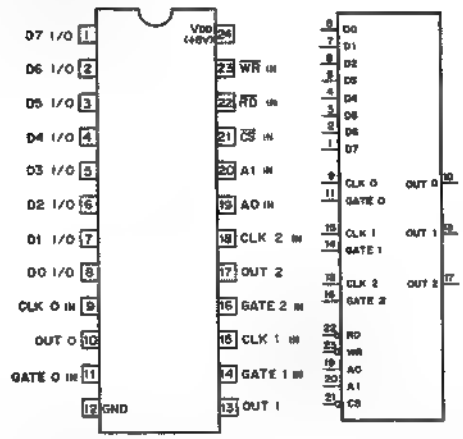

FUNCTION TABLE

INPUTS					FUNCTION
CS	RD	WR	A1	A0	
0	1	0	0	0	Load Counter No. 0
0	1	0	0	1	Load Counter No. 1
0	1	0	1	0	Load Counter No. 2
0	1	0	1	1	Control Word
0	0	1	0	0	Read Counter 0
0	0	1	0	1	Read Counter 1
0	0	1	1	0	Read Counter 2
0	0	1	1	1	No-Operation (HI-Z)
1	X	X	X	X	Disable (HI-Z)
0	1	1	X	X	No-Operation (HI-Z)

A0, A1	: COUNTER SELECT INPUTS
CLK 0 ~ 2	: COUNTER CLOCK INPUTS
CS	: CHIP SELECT INPUT
D0 ~ D7	: 8-BIT DATA INPUTS/OUTPUTS
GATE 0 ~ 2	: COUNTER GATE INPUTS
OUT 0 ~ 2	: COUNTER OUTPUTS
RD	: READ COUNTER INPUT
WR	: WRITE CMD OR DATA INPUT

0;LOW LEVEL
1;HIGH LEVEL
X;DON'T CARE
HI-Z;HIGH IMPEDANCE

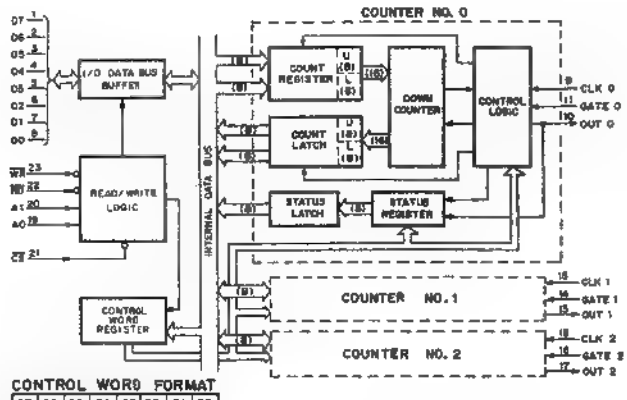

CONTROL WORD FORMAT

D7	D6	D5	D4	D3	D2	D1	D0
SC1	SC0	RL1	RL0	M2	M1	M0	BCD

SCD	OPERATION
0	16-BIT BINARY
1	BCD (4-DECADE)

M2	M1	M0	MODE
0	0	0	0
0	0	1	1
X	1	0	2
X	1	1	3
1	0	0	4
1	0	1	5

RL1	RL0	OPERATION
0	0	COUNTER LATCHING
0	1	READ/LOAD LSB ONLY
1	0	READ/LOAD MSB ONLY
1	1	LSB FIRST THEN MSB

SC1	SC0	SELECTED COUNTER
0	0	COUNTER No. 0
0	1	COUNTER No. 1
1	0	COUNTER No. 2
1	1	MULTIPLE LATCH CMD

UPD71055GB-10-3B4 (NEC)FLAT PACKAGE

C-MOS PARALLEL INTERFACE UNIT
—TOP VIEW—

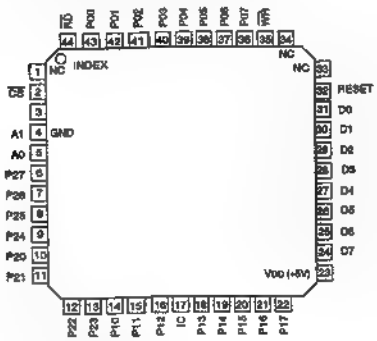

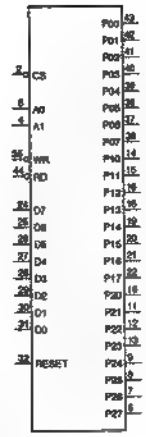

A1, A0	; ADDRESS	P17-P10	; PORT 1
$\overline{CS}$	; CHIP SELECT	P27-P20	; PORT 2
D7-D0	; DATA BUS	$\overline{RD}$	; READ STROBE
P07-P00	; PORT 0	$\overline{WR}$	; WRITE STROBE

IC ; INTERNALLY CONNECTED

CS	RD	WR	A1	A0	OPERATION	CPU ACTION
0	0	1	0	0	PORT0 → DATA • BUS	INPUT
0	0	1	0	1	PORT1 → DATA • BUS	INPUT
0	0	1	1	0	PORT2 → DATA • BUS	INPUT
0	0	1	1	1	DISABLE	
0	0	0	X	X		
0	1	0	0	0	DATA • BUS → PORT0	OUTPUT
0	1	0	0	1	DATA • BUS → PORT1	OUTPUT
0	1	0	1	0	DATA • BUS → PORT2	OUTPUT
0	1	0	1	1	DATA • BUS → COMMAND REGISTER	OUTPUT
0	1	1	X	X	HIGH IMPEDANCE	
1	X	X	X	X		

0 ; LOW LEVEL
1 ; HIGH LEVEL
X ; DON'T CARE

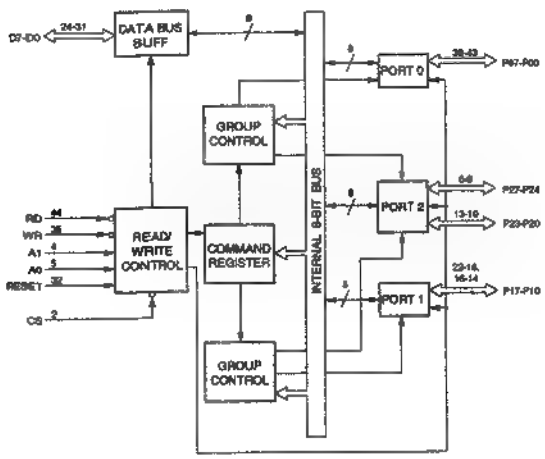

UPD71059C-10 (NEC)

C-MOS INTERRUPT CONTROL UNIT
-TOP VIEW-

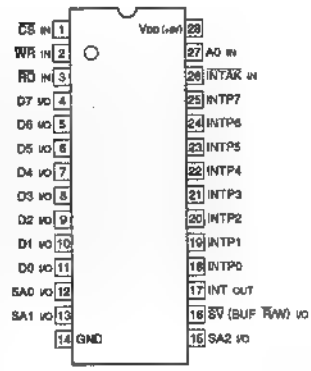

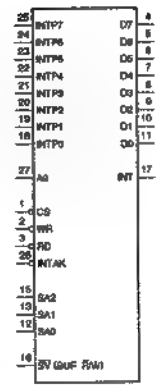

INPUT

A0	; ADDRESS
$\overline{CS}$	; CHIP SELECT
$\overline{INTAK}$	; INTERRUPT ACKNOWLEDGE
INTP0-INTP7	; INTERRUPT REQUEST FROM PERIPHERAL
	; READ STROBE
	; WRITE STROBE

OUTPUT

INT	; INTERRUPT

INPUT/OUTPUT

D0-D7	; DATA BUS
SA0-SA2	; SLAVE ADDRESS
SV (BUF R/W)	; SLAVE / BUFFER READ WRITE

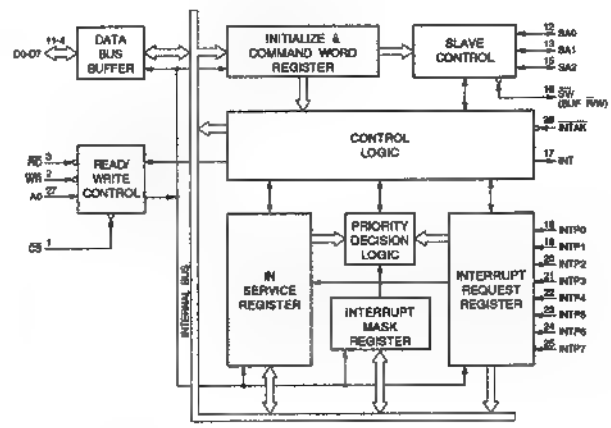

WS59510-40J (WAFER SCALE)

16x16 MULTIPLIER ACCUMULATOR

-TOP VIEW-

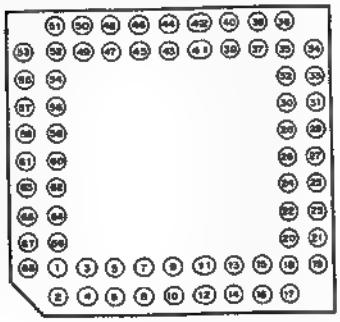

PIN NO.	I/O	SYMBOL	PIN NO.	I/O	SYMBOL	PIN NO.	I/O	SYMBOL
1	I	X6	24	I	OEM	47	I/O	P13, Y13
2	I	X7	25	I	CLKP	48	I/O	P12, Y12
3	I	X8	26	I/O	P34	49	I/O	P11, Y11
4	I	X9	27	I/O	P33	50	I/O	P10, Y10
5	I	X10	28	I/O	P32	51	I/O	P9, Y9
6	I	X11	29	I/O	P31	52	I/O	P8, Y8
7	I	X12	30	I/O	P30	53	–	GND
8	I	X13	31	I/O	P29	54	–	GND
9	I	X14	32	I/O	P28	55	I/O	P7, Y7
10	I	X15	33	I/O	P27	56	I/O	P6, Y6
11	I	OEL	34	I/O	P26	57	I/O	P5, Y5
12	I	RND	35	I/O	P25	58	I/O	P4, Y4
13	I	SUB	36	I/O	P24	59	I/O	P3, Y3
14	I	ACC	37	I/O	P23	60	I/O	P2, Y2
15	I	CLKX	38	I/O	P22	61	I/O	P1, Y1
16	I	CLKY	39	I/O	P21	62	I/O	P0, Y0
17	–	Vcc (+5V)	40	I/O	P20	63	I	X0
18	–	Vcc (+5V)	41	I/O	P19	64	I	X1
19	–	Vcc (+5V)	42	I/O	P18	65	I	X2
20	–	Vcc (+5V)	43	I/O	P17	66	I	X3
21	I	TC	44	I/O	P16	67	I	X4
22	I	OEX	45	I/O	P15, Y15	68	I	X5
23	I	PREL	46	I/O	P14, Y14			

ACC : ACCUMULATE
CLKP : CLOCK
CLKX : CLOCK
CLKY : CLOCK
OEL : OUTPUT ENABLE LEAST
OEM : OUTPUT ENABLE MOST
OEX : OUTPUT ENABLE EXTENDED
P0 – P34 : BIDIRECTIONAL PORT
PREL : PRELOAD
RND : ROUND
SUB : SUBTRACTION
TC : TWO'S COMPLEMENT
X0 – X15 : MULTIPLIER DATA INPUT
Y0 – Y15 : BIDIRECTIONAL PORT

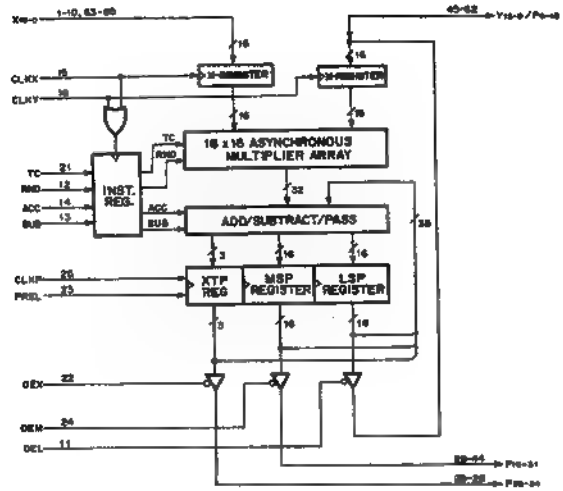

YMF262-ME2 (YAMAHA)

C-MOS 4-OPERATOR FM SOUND GENERATOR

-TOP VIEW-

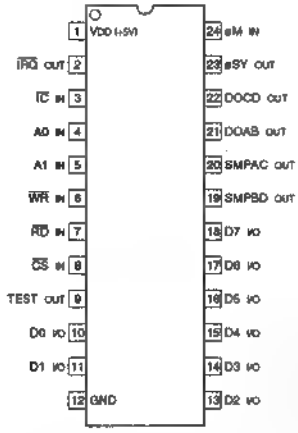

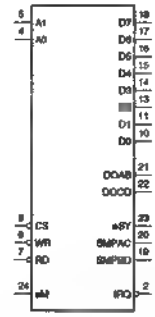

CS	RD	WR	A0	A1	MODE
1	X	X	X	X	IN-ACTIVE MODE
0	1	0	0	0/1	ADDRESS WRITE MODE
0	1	0	1	X	DATA WRITE MODE
0	0	1	0	0	STATUS READ MODE

0 ; LOW LEVEL
1 ; HIGH LEVEL
X ; DON'T CARE

INPUT
øM ; MASTER CLOCK (14.32 MHz)
A0, A1 ; CPU INTERFACE ADDRESS SELECT
CS ; CHIP SELECT
RD ; READ ENABLE
WR ; WRITE ENABLE
IC ; INITIAL CLEAR INPUT

OUTPUT
øSY ; DAC INTERFACE DATA LATCH SIGNAL
IRQ ; TIMER INTERRUPT SIGNAL
DOAB ; DAC INTERFACE CH-A, CH-B SERIAL DATA
DOCD ; DAC INTERFACE CH-C, CH-D SERIAL DATA
SMPAC ; DAC INTERFACE CH-A, CH-C SAMPLE/HOLD
SMPBD ; DAC INTERFACE CH-B, CH-D SAMPLE/HOLD

INPUT/OUTPUT
D0 - D7 ; CPU INTERFACE DATA BUS

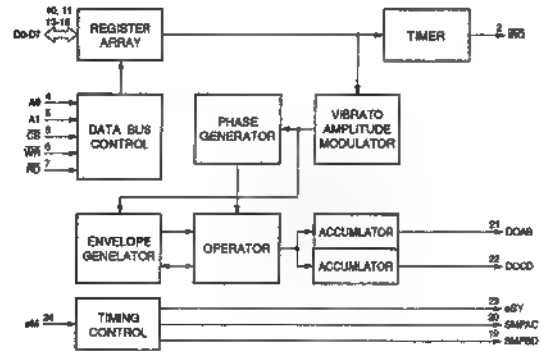

Z8401510FEC (ZILOG)

C-MOS INTELLIGENT PERIPHERAL CONTROLLER

-TOP VIEW-

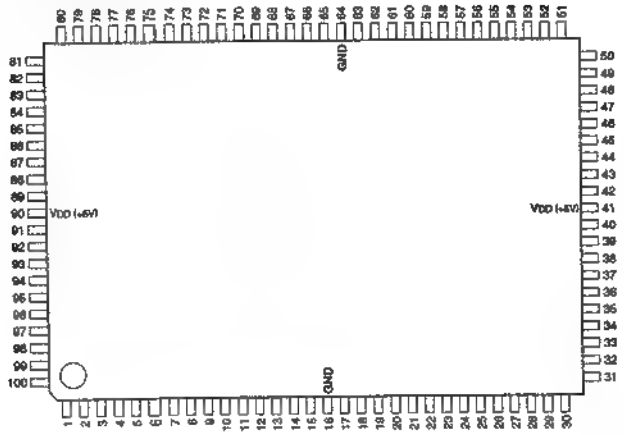

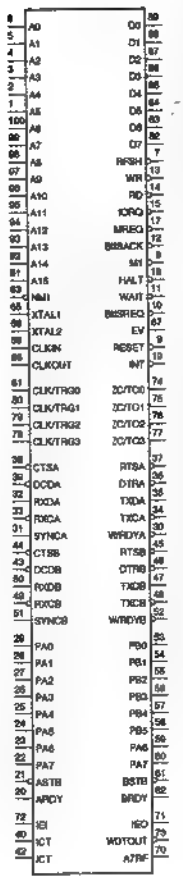

INPUT

ASTB, BSTB	; PORT A, B STROBE
BUSACK	; BUS ACKNOWLEDGE
BUSREQ	; BUS REQUEST
CLK/TRG0 - CLK/TRG3	; EXTERNAL CLOCK/TRIGGER
CLKIN	; SYSTEM CLOCK
CTSA, CTSB	; CLEAR TO SEND
DCDA, DCDB	; DATA CARRIER DETECT
EV	; EVALUATOR
IEI	; INTERRUPT ENABLE
INT	; MASKABLE INTERRUPT REQUEST
NMI	; NON-MASKABLE INTERRUPT REQUEST
RESET	; RESET
RXCA, RXCB	; RECEIVE CLOCK A, B
RXDA, RXDB	; SERIAL RECEIVE DATA A, B
TXCA, TXCB	; TRANSMIT CLOCK A, B
WAIT	; WAIT
XTAL1	; CRYSTAL OSCILLATOR

OUTPUT

A7RF	; 1-BIT AUXILIARY ADDRESS BUS
ARDY, BRDY	; REGISTER A, B READY
CLKOUT	; SYSTEN CLOCK
DTRA, DTRB	; DATA TERMINAL READY
HALT	; HALT
IEO	; TEST
IEO	; INTERRUPT ENABLE
MREQ	; REFRESH
RTSA, RTSB	; REQUEST TO SEND
SYNCA, SYNCB	; SYNCHRONOUS A, B
TXDA, TXDB	; SERIAL TRANSMIT DATA A, B
W/RDYA, W/RDYB	; WAIT/READY A, B
WDTOUT	; WATCH DOG TIMER
XTAL2	; CRYSTAL OSCILLATOR
ZC/TO0 - ZC/TO3	; ZERO COUNT/TIMER

INPUT/OUTPUT

A0 - A15	; 16-BIT ADDRESS BUS
D0 - D7	; 8-BIT BIDIRECTIONAL DATA BUS
M1	; MACHINE SYCLE "1"
MREQ	; I/O REQUEST
PA0 - PA7, PB0 - PB7	; PORT A, B DATA
RD	; READ
WR	; WRITE

(VDD = +5V)

PIN No.	I/O	SIGNAL	PIN No.	I/O	SIGNAL	PIN No.	I/O	SIGNAL	PIN No.	I/O	SIGNAL
1	I/O	A5	26	I/O	PA3	51	I/O	SYNCB	76	O	ZC/TO2
2	I/O	A4	27	I/O	PA2	52	O	W/RDYB	77	O	ZC/TO3
3	I/O	A3	28	I/O	PA1	53	I/O	PB0	78	I	CLK/TG3
4	I/O	A2	29	I/O	PA0	54	I/O	PB1	79	I	CLK/TG2
5	I/O	A1	30	O	W/RDYA	55	I/O	PB2	80	I	CLK/TG1
6	I/O	A0	31	I/O	SYNCA	56	I/O	PB3	81	I	CLK/TG0
7	O	RFSH	32	I	RXDA	57	I/O	PB4	82	I/O	
8	I/O	M1	33	I	RXCA		I/O	PB5	83	I/O	D6
9	I	RESET	34	I	TXCA	59	I/O	PB6	84	I/O	D5
10	I	BUSREQ	35	O	TXDA	60	I/O	PB7	85	I/O	D4
11	I	WAIT	36	O	DTRA	61	I	BSTB	86	I/O	D3
12	O	BUSACK	37	O	RTSA	62	O	BRDY		I/O	D2
13	I/O	WR	38	I	CTSA	63	I	NMI	88	I/O	D1
14	I/O	RD	39	I	DCDA	64	—	GND		I/O	D0
15	I/O	IORQ	40	O	ICT	65	I	XTAL1	90	—	VDD
16	—	GND	41	—	VDD	66	O	XTAL2		I/O	A15
17	I/O	MREQ	42	O	ICT	67	I	EV	92	I/O	A14
18	O	HALT	43	I	DCDB	68	O	CLKOUT	93	I/O	A13
19	I	INT	44	I	CTSB	69	I	CLKIN	94	I/O	A12
20	O	ARDY	45	O	RTSB	70	O	A7RF	95	I/O	A11
21	I	ASTB	46	O	DTRB	71	O	IEO	96	I/O	A10
22	I/O	PA7	47	O	TXDB	72	I	IEI	97		A9
	I/O	PA6	48	I	TXCB	73	O	WDTOUT	98	I/O	A8
24	I/O	PA5	49	I	RXCB	74	O	ZC/TO0	99	I/O	A7
25	I/O	PA4	50	I	RXDB	75	O	ZC/TO1	100	I/O	A6

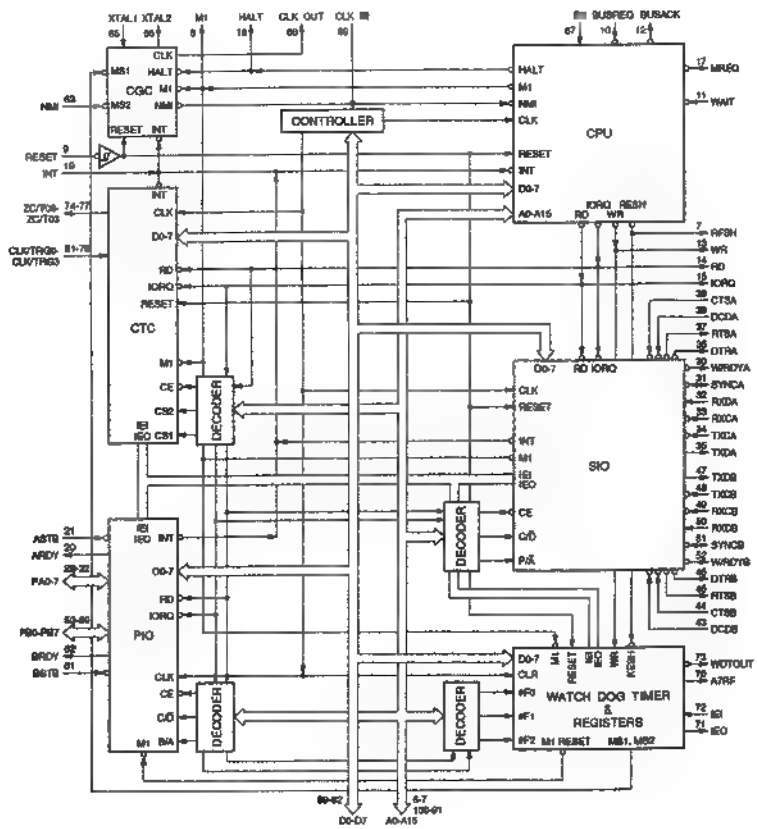

Z84C4306FEC (ZILOG)

C-MOS SERIAL INPUT/OUTPUT CONTROLLER

-TOP VIEW-

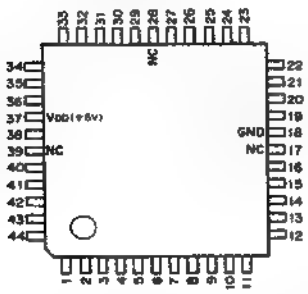

(VDD = +5 V)

PIN NO.	I/O	SIGNAL	PIN NO.	I/O	SIGNAL	PIN NO.	I/O	SIGNAL
1	O	DTRA	16	O	W/RDYB	31	I/O	D5
2	O	RTSA	17	–	NC	32	I/O	D7
3	I	CTSA	18	–	GND	33	O	INT
4	I	DCDA	19	I	RD	34	I	IEI
5	I	ø	20	I	C/D	35	O	IEO
6	I	RESET	21	I	B/A	36	I	M1
7	I	DCDB	22	I	CE	37	–	VDD
8	I	CTSB	23	I/O	IORQ	38	■	W/RDYA
9	O	RTSB	24	I/O	D6	39	–	NC
10	O	DTRB	25	I/O	D4	40	I/O	SYNCA
11	O	TXDB	26	I/O	D2	41	I	RXDA
■	I	TXCB	27	I/O	D0	42	I	RXCA
13	I	RXCB	28	–	NC	43	I	TXCA
14	I	RXDB	29	I/O	D1	44	O	TXDA
15	I/O	SYNCB	30	I/O	■			

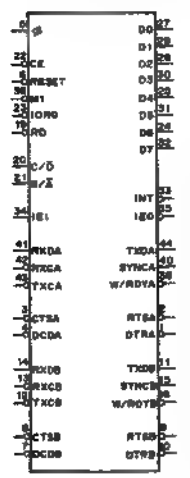

INPUT

ø	: SYSTEM CLOCK
B/A	: CHANNEL A OR B SELECT
C/D	: CONTROL OR DATA SELECT
CE	: CHIP ENABLE
CTSA	: CLEAR TO SEND A
CTSB	: CLEAR TO SEND B
DCDA	: DATA CARRIER DETECT A
DCDB	: DATA CARRIER DETECT B
■	: INTERRUPT ENABLE INPUT
M1	: MACHINE CYCLE ONE
RD	: READ CYCLE STATUS
RESET	: RESET
RXCA	: RECEIVER CLOCKS A
RXCB	: RECEIVER CLOCKS B
RXDA	: RECEIVE DATA A
RXDB	: RECEIVE DATA B
TXCA	: TRANSMITTER CLOCKS A
TXCB	: TRANSMITTER CLOCKS B

OUTPUT

DTRA	: DATA TERMINAL READY A
DTRB	: DATA TERMINAL READY B
IEO	: INTERRUPT ENABLE OUTPUT
INT	: INTERRUPT REQUEST
RTSA	: REQUEST TO SEND A
RTSB	: REQUEST TO SEND B
TXDA	: TRANSMIT DATA A
TXDB	: TRANSMIT DATA B
W/RDYA	: WAIT/READY A
W/RDYB	: WAIT/READY B

INPUT/OUTPUT

D0 – D7	: SYSTEM DATA BUS
IORQ	: INPUT/OUTPUT REQUEST
SYNCA	: SYNCHRONIZATION A
SYNCB	: SYNCHRONIZATION B

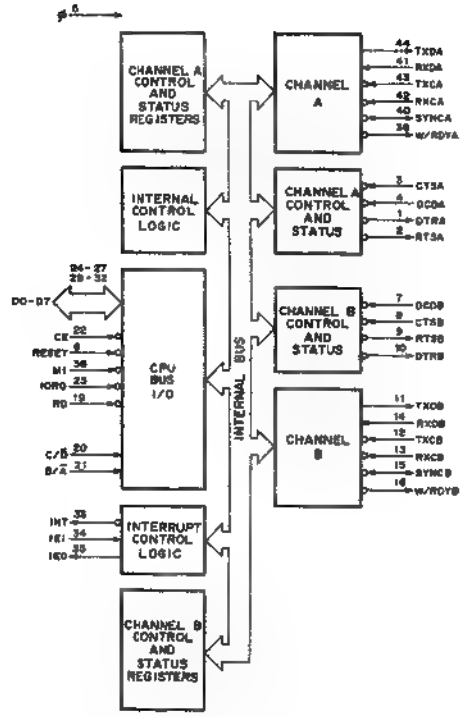

IDT71321SA55J-TL (INTEGRATED DEVICE TECHNOLOGY)
IDT71421SA55J-TL

C-MOS 16K(2Kx8)-BIT DUAL-PORT RAM WITH INTERRUPT
-TOP VIEW-

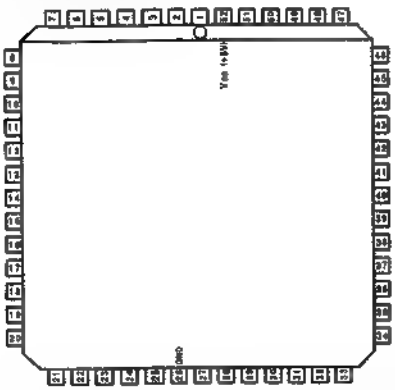

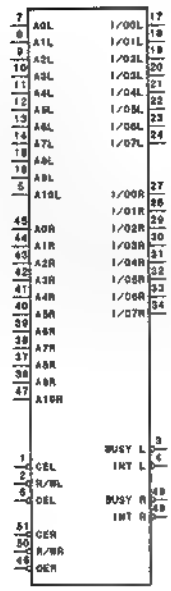

A0L-A10L
A0R-A10R : ADDRESS INPUTS
BUSYL BUSYR : BUSY INPUTS
CEL CER : CHIP ENBLE INPUTS
I/O0L-I/O7L,
I/O0R-I/O7R : DATA INPUTS/OUTPUTS
INTL INTR : INTERRUPT OUTPUTS
OEL OER : OUTPUT ENABLE INPUTS
R/WL, R/WR : READ/WRITE ENABLE INPUTS

PIN No.	I/O	SIGNAL	PIN No.	I/O	SIGNAL	PIN No.	I/O	SIGNAL
1	I	CE L	19	I/O	I/O 2L	37	I	A6R
2	I	R/W L	■	I/O	I/O 3L	38	I	A7R
3	O	BUSY L	21	I/O	I/O 4L	39	I	A8R
4	O	INT L	22	I/O	I/O 5L	40	I	A5R
5	I	A10L	23	I/O	I/O 6L	41	I	A4R
6	I	OEL	24	I/O	I/O 7L	42	I	A3R
7	I	A0L	25	I/O	NC	43	I	A2R
8	I	A1L	26	-	GND	44	I	A1R
9	I	A2L	27	I/O	I/O 0R	45	I	A0R
10	I	A3L	28	I/O	I/O 1R	46	I	OE R
11	I	A4L	29	I/O	I/O 2R	47	I	A10R
12	I	A5L	30	I/O	I/O 3R	48	O	INTR
13	I	A6L	31	I/O	I/O 4R	49	O	BUSYR
14	I	A7L	32	I/O	I/O 5R	50	I	R/WR
15	I	A8L	33	I/O	I/O 6R	51	I	CER
16	I	A9L	34	I/O	I/O 7R	52	-	Vcc (+5V)
17	I/O	I/O 0L	35	I/O	NC			
18	I/O	I/O 1L	36	I	A9R			

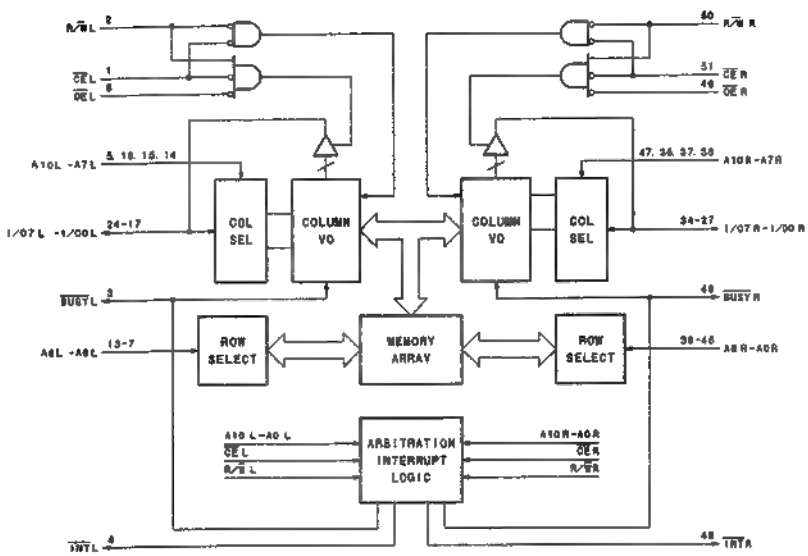

CY27H010-45JC (CYPRESS)

C-MOS 1M(131,072X8)-BIT HIGH-SPEED UV EPROM
-TOP VIEW-

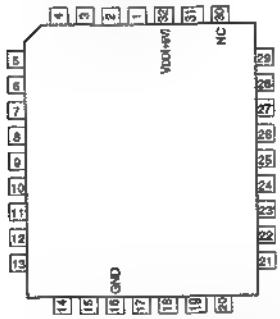

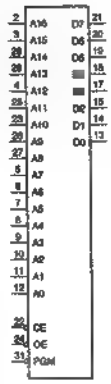

(VDD = +5V)

PIN NO.	I/O	SIGNAL	PIN NO.	I/O	SIGNAL
1	—	VPP	17	O	D3
2	I	A16	18	O	D4
3	I	A15	19	O	D5
4	I	A12	20	O	D6
5	I	A7	21	O	D7
6	I	A6	22	I	$\overline{CE}$
7	I	A5	23	I	A10
8	I	A4	24	I	$\overline{OE}$
9	I	A3	25	I	A11
10	I	A2	26	I	A9
11	I	A1	27	I	A8
12	I	A0	28	I	A13
13	O	D0	29	I	A14
14	O	D1	30	—	NC
15	O	D2	31	I	$\overline{PGM}$
16	—	GND	32	—	VDD

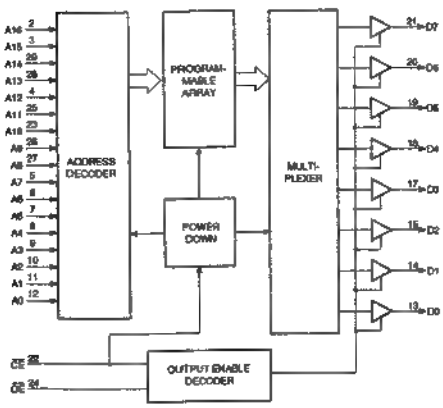

74F646SCX (NS)

TTL BUS TRANSCEIVER/REGISTER WITH 3-STATE OUTPUTS
-TOP VIEW-

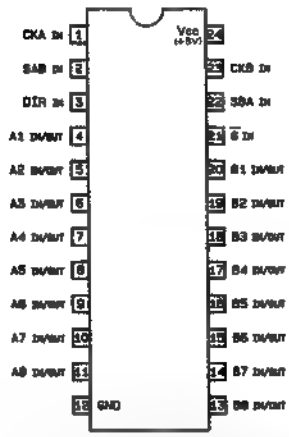

A1~A8; A-BUS DATA INPUTS/OUTPUTS
B1~B8; B-BUS DATA INPUTS/OUTPUTS
CKA; A-BUS CLOCK INPUTS
CKB; B-BUS CLOCK INPUTS
SAB, SBA; SELECT INPUTS
DIR; DIRECTION INPUT
G; ENABLE INPUT

G	DIR	CKA	CKB	SAB	SBA	A1~A8	B1~B8	FUNCTION
X	X	↑	X	X	X	INPUT	UNDEFINED	STORE A DATA
X	X	X	↑	X	X	UNDEFINED	INPUT	STORE B DATA
1	X	↑	↑	X	X	INPUT	INPUT	STORE A & B DATA
1	X	1or0	1or0	X	X			HOLD DATA
0	0	X	X	X	0	OUTPUT	INPUT	TRANSFER B DATA TO A BUS
0	0	X	1or0	X	1			TRANSFER STORED B DATA TO A BUS
0	1	X	X	0	X	INPUT	OUTPUT	TRANSFER A DATA TO B BUS
0	1	1or0	X	1	X			TRANSFER STORED A DATA TO B BUS

0; LOW LEVEL 1; HIGH LEVEL X; DON'T CARE

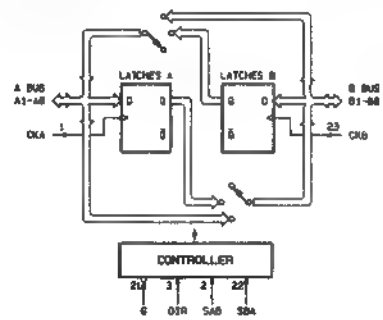

AM27S19PC (AMD)

256-BIT GENERIC SERIES BIPOLAR PROM
-TOP VIEW-

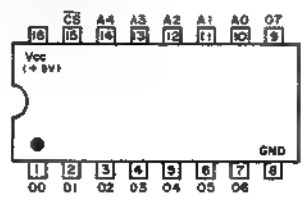

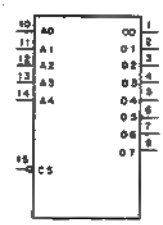

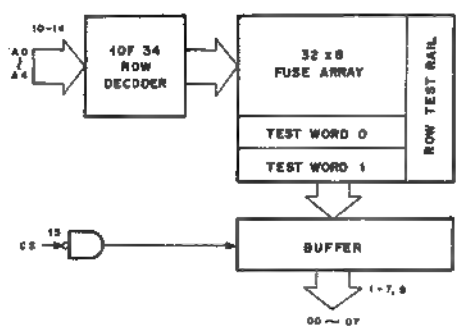

AD1890JP (AD)

C-MOS STEREO ASYNCHRONOUS SAMPLE RATE CONVERTER
-TOP VIEW-

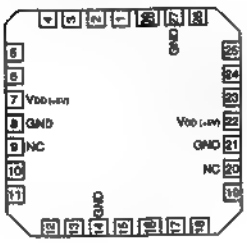

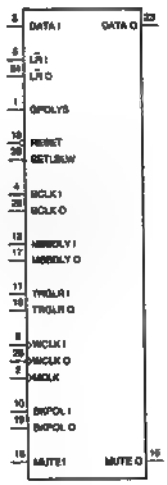

(VDD = +5V)

PIN No.	I/O	SIGNAL	PIN No.	I/O	SIGNAL	PIN No.	I/O	SIGNAL
1	I	GPOLYS	11	I	TRGLR I	21	—	GND
2	I	MCLK	12	I	MSBDLY I	22	—	VDD
3	I	DATA I	13	I	RESET	23	O	DATA O
4	I	BCLK I	14	—	GND	24	I	LRI O
5	I	WCLK I	15	I	MUTE I	25	I	WCLK O
6	I	LRI I	16	O	MUTE O	26	I	BCLK O
7	—	VDD	17	I	MSBDLY O	27	—	GND
8	—	GND	18	I	TRGLR O	28	I	SETLSLW
9	—	NC	19	I	BKPOL O			
10	I	BKPOL I	20	—	NC			

INPUT
BCLK I ; BIT CLOCK INPUT FOR INPUT DATA
BCLK O ; BIT CLOCK INPUT FOR OUTPUT DATA
BKPOL I, BKPOL II ; BIT CLOCK POLARITY
DATA I ; SERIAL INPUT, MSB FIRST
GPOLYS ; GROUP DELAY-SHORT
LRI I ; LEFT/RIGHT CLOCK INPUT FOR INPUT DATA
LRI O ; LEFT/RIGHT CLOCK INPUT FOR OUTPUT DATA
MCLK ; MASTER CLOCK INPUT
MSBDLY I, MSBDLY O ; MSB DELAY
MUTE I ; MUTE INPUT
RESET ; ACTIVE LOW RESET
SETLSLW ; SETTLE SLOW TO CHANGES IN SAMPLE RATES
TRGLR I, TRGLR O ; TRIGGER ON LRI
WCLK I ; WORD CLOCK INPUT FOR INPUT DATA
WCLK O ; WORD CLOCK INPUT FOR OUTPUT DATA

OUTPUT
DATA O ; SERIAL OUTPUT, MSB FIRST
MUTE O ; MUTE OUTPUT

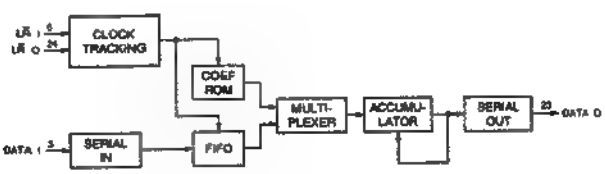

AM29F200B-75EC (AMD)

C-MOS FLASH MEMORY
-TOP VIEW-

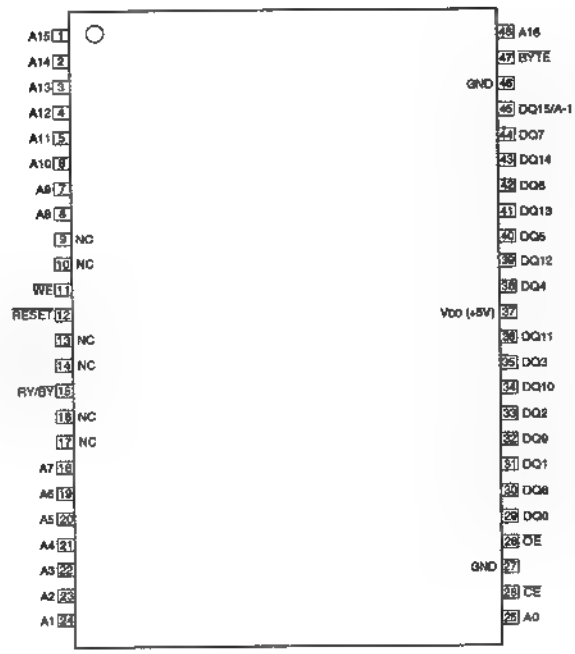

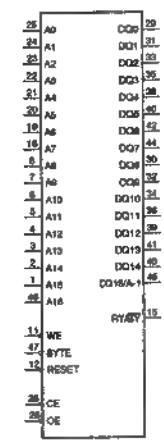

INPUT
A-1,A0-A16 ; ADDRESS
BYTE ; SELECTS 8-BIT OR 16-BIT MODE
CE ; CHIP ENABLE
OE ; OUTPUT ENABLE
RESET ; RESET
WE ; WRITE ENABLE

OUTPUT
RY/BY ; READY-BUSY

INPUT/OUTPUT
DQ0-DQ15 ; DATA

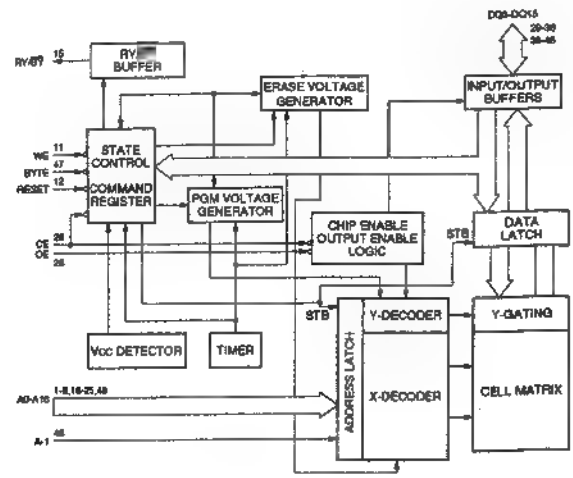

BP3510 (ROHM)

ACTIVE TERMINATOR
-TOP VIEW-

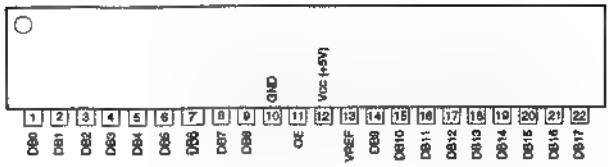

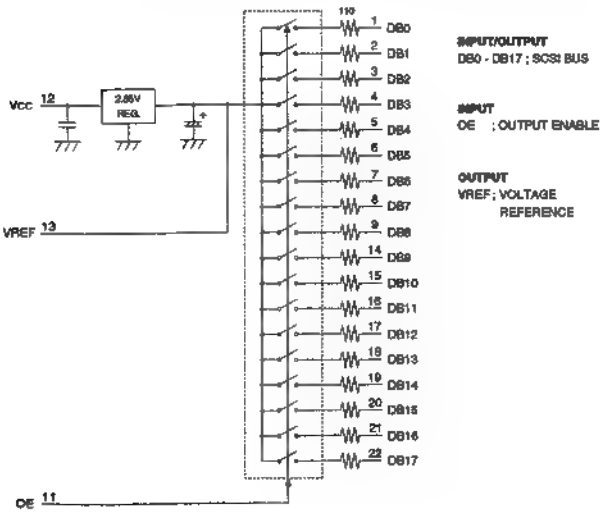

INPUT/OUTPUT
DB0 - DB17 ; SCSI BUS

INPUT
OE ; OUTPUT ENABLE

OUTPUT
VREF; VOLTAGE REFERENCE

CXA1389AQ (SONY)

CABLE DRIVER
-TOP VIEW-

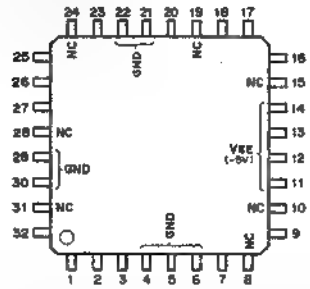

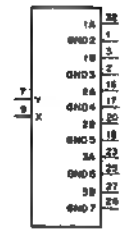

(VEE = −5V)

PIN NO.	I/O	SIGNAL	PIN NO.	I/O	SIGNAL	PIN NO.	I/O	SIGNAL	PIN NO.	I/O	SIGNAL
1	–	GND2	9	I	X	17	–	GND4	25	–	GND6
2	–	GND3	10	–	NC	18	–	GND5	26	–	GND7
3	O	1B	11	–	VEE	19	–	NC	27	O	3B
4	–	GND	12	–	Vcc	20	O	2B	28	–	NC
5	–	GND	13	–	VEE	21	–	GND	29	–	GND
6	–	GND	14	–	VEE	22	–	GND	30	–	GND
7	I	Y	15	–	NC	23	O	3A	31	–	NC
8	–	NC	16	O	2A	24	–	NC	32	O	1A

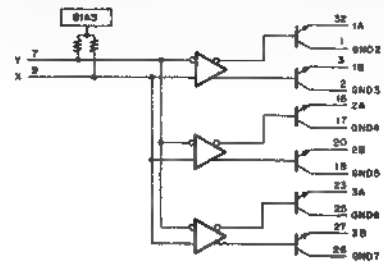

CX22029 (SONY)
CX22029-T6

TTL-TO-ECL TRANSLATOR
-TOP VIEW-

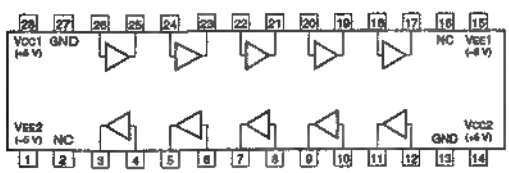

CXD2183R (SONY)

C-MOS SIGNAL PROCESSOR (DIGITAL VTR)

-TOP VIEW-

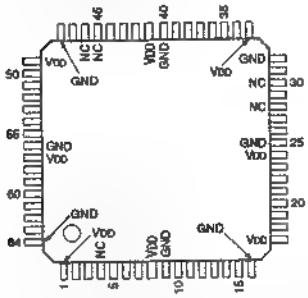

(VDD = +2.7 to 3.3V)

PIN No.	I/O	SIGNAL	PIN No.	I/O	SIGNAL	PIN No.	I/O	SIGNAL	PIN No.	I/O	SIGNAL
1	—	VDD	17	—	VDD	33	—	VDD	49	—	VDD
2	I	VFON	18	I/O	PB0	34	I/O	C7	50	I	XRST
3	I	HFON	19	I/O	PB1	35	I/O	C6	51	O	CEN
4	—	NC	20	I/O	PB2	36	I/O	C5	52	I	T2
5	I/O	SYNR	21	I/O	PB3	37	I/O	C4	53	I	T1
6	I/O	PRPB0	22	I/O	PB4	38	I/O	C3	54	O	T0
7	I/O	PRPB1	23	I/O	PB5	39	I/O	C2	55	I	CLK
8	—	VDD	24	—	VDD	40	—	GND	56	—	GND
9	—	GND	25	—	GND	41	—	VDD	57	—	VDD
10	I/O	PRPB2	26	I/O	PB6	42	I/O	C1	58	O	CEN
11	I/O	PRPB3	27	I/O	PB7	43	I/O	C0	59	O	PRB
12	I/O	PRPB4	28	—	NC	44	I/O	SYNP	60	O	PRB
13	I/O	PRPB5	29	I	XPA5	45	—	NC	61	O	NVP
14	I/O	PRPB6	30	—	NC	46	—	NC	62	O	NHP
15	I/O	PRPB7	31	I	MODE	47	I	CINV	63	I	REC
16	—	GND	32	—	GND	48	—	GND	64	—	GND

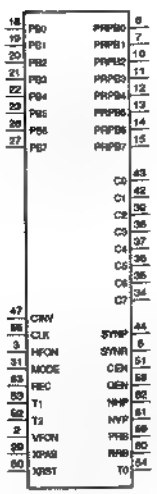

INPUT

CINV	; PR/PB LINE SEQUENTIAL INVERT SIGNAL
CLK	; CLOCK
HFON	; HORIZONTAL FILTER ON/OFF (H : ON,L : OFF)
MODE	; OPERATION MODE SW
REC	; REC/PB SELECT (H : REC, L : PB)
T1	; TEST SIGNAL
T2	; TEST SIGNAL
VFON	; VERTICAL FILTER ON/OFF (H : ON,L : OFF)
XPA5	; THROUGH OUT PRPB⇔C, SYNR⇔SYNP
XRST	; RESET

OUTPUT

CEN	; EXTERNAL SYNC TEST MONITOR
CEN	; TIMING GENERATOR TEST MONITOR
NHP	; TIMING GENERATOR TEST MONITOR
NVP	; TIMING GENERATOR TEST MONITOR
PRB	; TIMING GENERATOR TEST MONITOR
PRB	; TIMING GENERATOR TEST MONITOR
T0	; TEST SIGNAL

INPUT/OUTPUT

C0 - C7	; PB DATA
PB0 - PB7	; LINE SEQUENTIALIZE PR, PB DATA
PRPB0 - PRPB7	; PR, PB DATA
SYNP	; CHROMA REFERENCE SYNC
SYNR	; PR/PB REFERENCE SYNC

MODE	PRPB0 – PRPB7
L	PR DATA
H	13.5 MHz RATE TIME MULTIPLEXED PR, PB DATA

CXD8176AQ (SONY)

C-MOS DUAL PORT RAM CONTROLLER

-TOP VIEW-

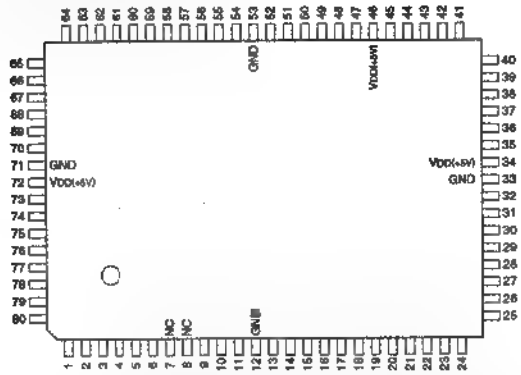

(VDD = +5V)

PIN NO.	I/O	SIGNAL	PIN NO.	I/O	SIGNAL	PIN NO.	I/O	SIGNAL	PIN NO.	I/O	SIGNAL
1	I/O	D0L	21	I/O	D7R	41	I/O	D0M	61	I	A10L
2	I	WRL	22	I/O	D6R	42	I/O	D1M	62	I	A9L
3	I	RDL	23	I/O	D5R	43	I/O	D4M	63	I	A8L
4	O	WAITL	24	I/O	D4R	44	I/O	D3M	64	I	A7L
5	I	CSL	25	I/O	D3R	45	I/O	D2M	65	I	A6L
6	I	CKL	26	I/O	D2R	46	—	VDD	66	I	A5L
7	—	NC	27	I/O	D1R	47	I/O	D1M	67	I	A4L
8	—	NC	28	I/O	D0R	48	I/O	D0M	68	I	A3L
9	I	A10R	29	I	WRR	49	O	A0M	69	I	A2L
10	I	A9R	30	I	RDR	50	O	A1M	70	I	A1L
11	I	A8R	31	O	WAITR	51	O	A2M	71	—	GND
12	—	GND	32	I	CSR	52	O	A3M	72	—	VDD
13	I	A7R	33	—	GND	53	—	GND	73	I	A0L
14	I	A6R	34	—	VDD	54	O	A4M	74	I/O	D7L
15	I	A5R	35	I	CKR	55	O	A5M	75	I/O	D6L
16	I	A4R	36	I	CKT	56	O	A6M	76	I/O	D5L
17	I	A3R	37	O	WEM	57	O	A7M	77	I/O	D4L
18	I	A2R	38	O	OEM	58	O	A8M	78	I/O	D3L
19	I	A1R	39	O	CEM	59	O	A9M	79	I/O	D2L
20	I	A0R	40	I/O	D7M	60	O	A10M	80	I/O	D1L

INPUT

A0L - A10L	; ADDRESS BUS OF PORT L
A0R - A10R	; ADDRESS BUS OF PORT R
CKL	; CLOCK OF PORT L
CKR	; CLOCK OF PORT R
CKT	; CLOCK
CSL	; CHIP SELECT OF PORT L
CSR	; CHIP SELECT OF PORT R
RDL	; READ STROBE OF PORT L
RDR	; READ STROBE OF PORT R
WRL	; WRITE STROBE OF PORT L
WRR	; WRITE STROBE OF PORT R

OUTPUT

A0M - A10M	; ADDRESS BUS FOR MEMORY DEVICE
CEM	; CHIP ENABLE FOR MEMORY DEVICE
OEM	; OUTPUT ENABLE FOR MEMORY DEVICE
WAITL	; WAIT OF PORT L
WAITR	; WAIT OF PORT R
WEM	; WRITE ENABLE FOR MEMORY DEVICE

INPUT/OUTPUT

D0L - D7L	; DATA BUS OF PORT L
D0M - D7M	; DATA BUS FOR MEMORY DEVICE
D0R - D7R	; DATA BUS OF PORT R

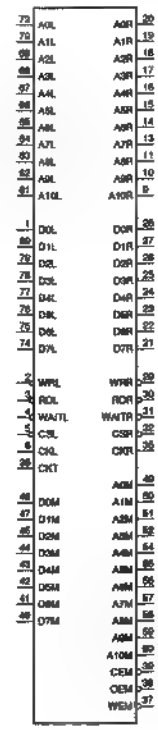

CXD8278AQ (SONY)

C-MOS DIGITAL AUDIO SIGNAL (AES/EBU) DECODER

—TOP VIEW—

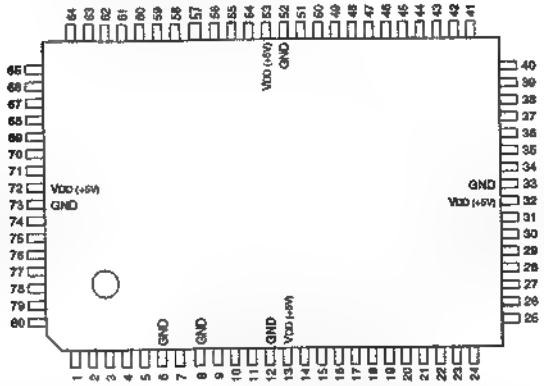

PIN NO.	I/O	SIGNAL	PIN NO.	I/O	SIGNAL	PIN NO.	I/O	SIGNAL	PIN NO.	I/O	SIGNAL
1	O	NOSGNL	21	I/O	FM12 TS4	41	I/O	RD LN2	■	I	BCKPOL
2	O	UNLOCK	22	I/O	FIXDPLLZ	42	I	CS	62	O	RXLR
3	O	SYNCERR	23	I/O	F128 TS2	43	O	INT	63	I	LRCKI
4	I	RXDATA	24	I	TST3	44	I	CPU AUTO	64	I	LRPOL
5	I	CLKIN	25	I/O	AD0 CON	45	I	TST1	65	O	RXBLKID
6	—	GND	26	I/O	AD1 NOA	46	O	SLIP0	■	■	CSAVLDTY
7	O	CLKOUT	27	I/O	AD2 FS0	47	O	SLIP1	67	O	CSBVLDTY
8	—	GND	28	I/O	AD3 FS1	48	I	DTMODE0	68	O	CRCA
9	O	FMASTER	29	I/O	AD4 FS2	49	I	DTMODE1	69	O	CRCB
10	I	PLLSEL	30	I/O	AD5 EOA	50	I	DTMODE2	70	I	MUTE0
11	O	PLLVAR	31	O	D0 E1A	51	I	DTMODE3	71	I	MUTE1
12	—	GND	32	—	VDD	52	—	GND	72	—	VDD
13	—	VDD	33	—	GND	53	—	VDD	73	—	GND
14	O	PLLREF	34	O	D1 E2A	54	O	COUT	74	I	MUTEON
15	I/O	LOCKPH0	35	■	D2 E0B	55	■	UOUT	75	O	VE3A
16	I/O	LOCKPH1	36	O	D3 E1B	56	O	VOUT	76	O	VE3B
17	I/O	LOCKPH2	37	O	D4 E2B	57	■	ERROR	77	O	VE1A
18	I/O	LOCKPH3	38	■	D5 MON	58	O	RDATA	78	O	VE1B
19	I/O	LOCKPH4	39	O	D6 LN0	59	O	RXBCK	79	O	PE1
20	I/O	LOCKPH5	40	O	D7 LN1	60	I	BCKI	80	O	PE3

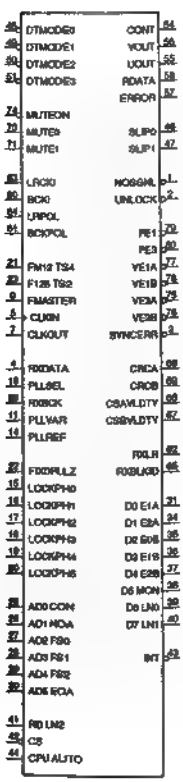

INPUT

BCKI	; REFERENCE BIT CLOCK (64/32Fs)
BCKPOL	; POLARITY SWITCHING SIGNAL OF BCKI (PIN NO.60) AND RXBCK (PIN NO.58)
CLKIN	; MASTER CLOCK OSCILLATOR INPUT AT DIGITAL PLL
CPU AUTO	; SELECTS CPU NTERFACE OR AUTO INTERFACE. ("H" : AUTO INTERFACE, "L" : CPU INTERFACE)
CS	; CHIP SELECT SIGNAL (INPUT FOR CHANNEL STATUS REGISTER) ("L" : SELECT)
DTMODE0-3	; OUTPUT FORMAT SPECIFYING CODE OF RDATA SIGNAL (PIN NO.58)
LRCKI	; REFERENCE LR CLOCK INPUT (Fs PERIOD)
LRPOL	; POLARITY SWITCHING SIGNAL OF LRCKI (PIN NO.63) AND RXLR (PIN NO.62)
MUTE0, 1	; RDATA (PIN NO.58) MUTE PERIOD SETTING CODE
MUTEON	; "L" : AUDIO OUTPUT BE FORCIBLY MUTE ON FOR A CERTAIN PERIOD
PLLSEL	; "L" : ANALOG PLL, "H" : DIGITAL PLL
RXDATA	; AES/EBU INPUT
TST1	; TEST INPUT (NORMALLY FIXED TO "L")
TST3	; TEST PIN (FIXED TO "L")

OUTPUT

CLKOUT	; MASTER CLOCK OSCILLATOR OUTPUT AT DIGITAL PLL
COUT	; C BIT STATUS SIGNAL EXTRACTED FROM AES/EBU INPUT SIGNAL.
CRCA, CRCB	; OUTPUTS THE RESULT OF CHANNEL STATUS CRC CHECK OF SUBFRAME A AND B AT ERROR OCCURRING
CSAVLDTY, CSBVLDTY	; SUBFRAME ■ AND B CHANNEL STATUS
D0 E1A	; SUBFRAME A CHANNEL STATUS (CPU AUTO : "H")
D1 E2A	; SUBFRAME A CHANNEL STATUS (CPU AUTO : "H")
D2 E0B	; SUBFRAME B CHANNEL STATUS (CPU AUTO : "H")
D3 E1B	; SUBFRAME B CHANNEL STATUS (CPU AUTO : "H")
D4 E2B	; SUBFRAME B CHANNEL STATUS (CPU AUTO : "H")
D5 MON	; SUBFRAME A CHANNEL STATUS (CPU AUTO : "H")
D6 LN0	; SUBFRAME A/B CHANNEL STATUS (CPU AUTO : "H")
D7 LN1	; SUBFRAME A/B CHANNEL STATUS (CPU AUTO : "H")
ERROR	; ERROR INFORMATION OUTPUT (PARITY, SLIP ERROR , etc.) IN SERIAL
FMASTER	; MASTER CLOCK OUTPUT
INT	; INTERRUPTION SIGNAL OUTPUT
NOSGNL	; NO SIGNAL DETECTION
PE1	; PARITY ERROR DETECTION OUTPUT (1 SUBFRAM)
PE3	; PARITY ERROR DETECTION OUTPUT (3 SUBFRAMS CONTINUOUSLY)
PLLREF	; RXDATA SYNC DETECTION
PLLVAR	; ANALOG PLL MASTER CLOCK 1/256 (2Fs) SIGNAL
RDATA	; AES/EBU INPUT SIGNAL DEMODULATED SIGNAL OUTPUT
RXBCK	; BIT CLOCK OUTPUT GENERATED FROM AES/EBU INPUT SIGNAL
RXBLKID	; BLOCK ■ SIGNAL
RXLR	; REFERENCE LR CLOCK OUTPUT (Fs PERIOD)
SLIP0, SLIP1	; DATA SLIP DETECTION
SYNCERR	; SYNC ERROR DETECTION OUTPUT.
UNLOCK	; DIGITAL PLL UNLOCK DETECTION OUTPUT.
UOUT	; U BIT (USER DATA BIT) STATUS SIGNAL EXTRACTED FROM RXDATA SIGNAL
VE1A	; VALIDITY ERROR DETECTION OUTPUT (ONE SUBFRAM A).
VE1B	; VALIDITY ERROR DETECTION OUTPUT (ONE SUBFRAM ■).
VE3A	; VALIDITY ERROR DETECTION OUTPUT (3FRAMS CONTINUOUSLY FOR SUBFRAM A)
VE3B	; VALIDITY ERROR DETECTION OUTPUT (3FRAMS CONTINUOUSLY FOR SUBFRAM B)
VOUT	; V BIT (VALIDITY BIT) STATUS SIGNAL EXTRACTED FROM RXDATA SIGNAL

INPUT/OUTPUT

AD0 CON	; CHANNEL STATUS (CPU AUTO : "H")
AD1 NOA	; CHANNEL STATUS (CPU AUTO : "H")
AD2 FS0	; CHANNEL STATUS (CPU AUTO : "H")
AD3 FS1	; CHANNEL STATUS (CPU AUTO : "H")
AD4 FS2	; CHANNEL STATUS (CPU AUTO : "H")
AD5 EOA	; SUBFRAME A CHANNEL STATUS (CPU AUTO : "H")
F128 TS2	; OUTPUTS 128Fs OF DIGITAL PLL.
FIXDPLL	; PLLSEL : "H", DIGITAL PLL OPERATION MODE SELECTION SIGNAL ("H" : NARROW MODE, "H" : WIDE MODE)
FM12 TS4	; 1/2 MCK OUTPUT
LOCKPH0-5	; PLLSEL : "H", FIXDPLL : "H" OPERATION PERIOD SETTING DATA INPUT AT NARROW MODE (DIGITAL PLL MODE)
RD LN2	; SUBFRAME A/B CHANNEL STATUS (CPU AUTO : "H")

CXD8280AQ (SONY)

C-MOS DIGITAL AUDIO TIME BASE EXPANSION FOR SIF RECEIVER

-TOP VIEW-

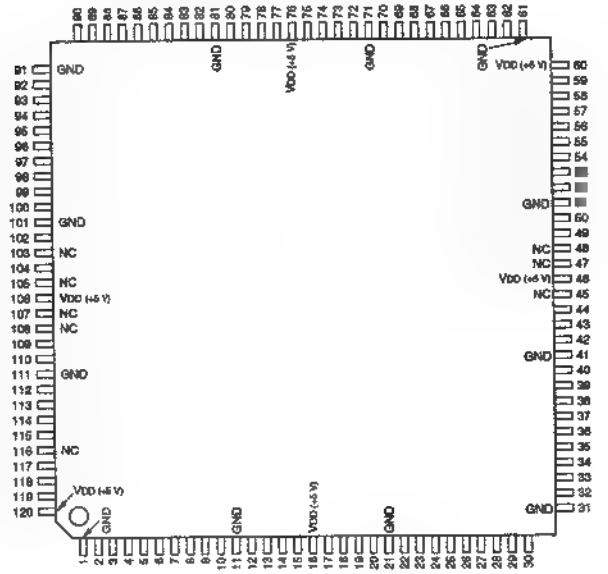

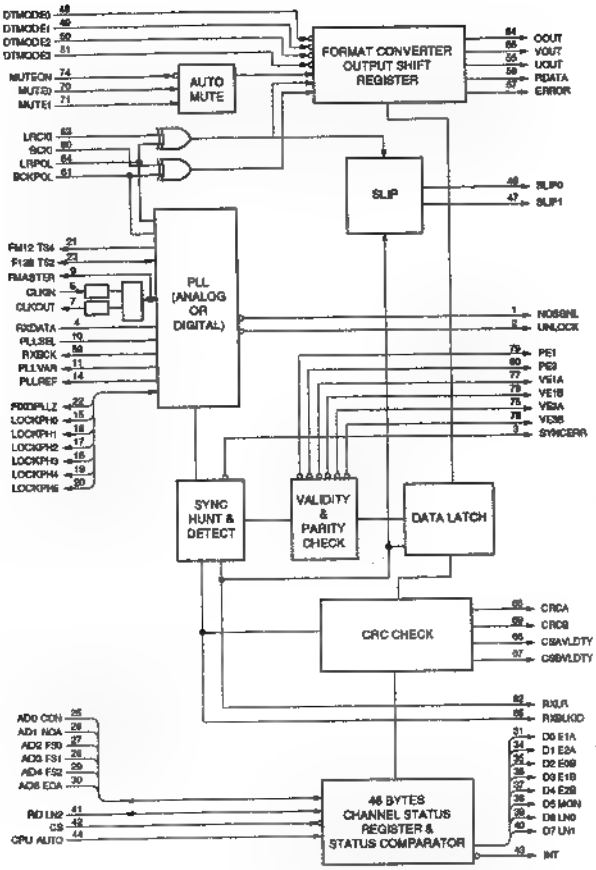

VDD = +5 V

PIN NO.	I/O	SIGNAL	DESCRIPTION	PIN NO.	I/O	SIGNAL	DESCRIPTION
1	–	GND		61	–	GND	
2	I	XIN	TEST	62	I	OECRD	OUTPUT ENABLE FOR PIN 52-59
3	I	CLR	POWER ON CLEAR	63	I	CRA0	BUS READ ADDRESS 0
4	O	HIGH	TEST (ALWAYS H)	64	I	CRA1	BUS READ ADDRESS 1
5	O	RERR	TEST (R-ERROR)	65	I	CRA2	BUS READ ADDRESS 2
6	O	MON4	TEST (DELAY CH-4)	66	I	CRA3	BUS READ ADDRESS 3
7	O	MON3	TEST (DELAY CH-3)	67	I	CRA4	BUS READ ADDRESS 4
8	O	MON2	TEST (DELAY CH-2)	68	I	CRA5	BUS READ ADDRESS 5
9	O	MON1	TEST (DELAY CH-1)	69	I	CRA6	BUS READ ADDRESS 6
10	I	OEMON	OUTPUT ENABLE FOR PIN 4-9	70	I	CREN	BUS ADDRESS LATCH ENABLE
11	–	GND		71	–	GND	
12	I	ITA	TEST	72	O	ERROR1	CH-1 ERROR FLAG
13	I	ITB	TEST	73	O	ERROR2	CH-2 ERROR FLAG
14	I	ITC	TEST	74	O	ERROR3	CH-3 ERROR FLAG
15	I	ITD	TEST	75	O	ERROR4	CH-4 ERROR FLAG
16	–	VDD		76	–	VDD	
17	I	INTP4	CH-4 AUDIO INTERPOLATE	77	O	EXIST1	CH-1 EXIST
18	I	INTP3	CH-3 AUDIO INTERPOLATE	78	O	EXIST2	CH-2 EXIST
19	I	INTP2	CH-2 AUDIO INTERPOLATE	79	O	EXIST3	CH-3 EXIST
20	I	INTP1	CH-1 AUDIO INTERPOLATE	80	O	EXIST4	CH-4 EXIST
21	–	GND		81	–	GND	
22	I	CHEX1	CHANNEL EXCHANGE 1	82	O	DIDPER	DID PARITY ERROR
23	I	CHEX0	CHANNEL EXCHANGE 0	83	O	DIDERR	DID UNMATCH ERROR
24	I	AFS	AUDIO FORMAT SELECT	84	O	DBNPER	DBN PARITY ERROR
25	I	LRS	AUDIO LEFT/RIGHT BIT SELECT	85	O	DBNERR	DBN UNCONTINUITY ERROR
26	I	DIR	AUDIO LSB/MSB FIRST SELECT	86	O	DCPER	DC PARITY ERROR
27	I	20/16	AUDIO 20-BIT/16-BIT SELECT	87	O	DCERR	DC UNMATCH ERROR
28	O	WERR	TEST (W-ERROR)	88	O	UDPER	UD PARITY ERROR
29	O	Z3/4	CH-3/4 BLOCK SYNC (Z-FLAG)	89	O	CSERR	CHECKSUM ERROR
30	O	Z1/2	CH-1/2 BLOCK SYNC (Z-FLAG)	90	I	OCERR	OUTPUT ENABLE FOR PIN 82-89
31	–	GND		91	–	GND	
32	O	C3/4	CH-3/4 CHANNEL STATUS BIT	92	I	VIDEO0	VIDEO DATA 0
33	O	C1/2	CH-1/2 CHANNEL STATUS BIT	93	I	VIDEO1	VIDEO DATA 1
34	O	U3/4	CH-3/4 USER BIT	94	I	VIDEO2	VIDEO DATA 2
35	O	U1/2	CH-1/2 USER BIT	95	I	VIDEO3	VIDEO DATA 3
36	O	V3/4	CH-3/4 VALIDITY FLAG	96	I	VIDEO4	VIDEO DATA 4
37	O	V1/2	CH-1/2 VALIDITY FLAG	97	I	VIDEO5	VIDEO DATA 5
38	O	AD3/4	CH-3/4 AUDIO DATA	98	I	VIDEO6	VIDEO DATA 6
39	O	AD1/2	CH-1/2 AUDIO DATA	99	I	VIDEO7	VIDEO DATA 7
40	I	OEAD	OUTPUT ENABLE FOR PIN 29-39	100	I	VIDEO8	VIDEO DATA 8
41	–	GND		101	–	GND	
42	I	BCK	AUDIO BIT CLOCK	102	I	VIDEO9	VIDEO DATA 9
43	I	LRCK	AUDIO L/R CLOCK	103	–	NC	
44	O	CMYW	TEST	104	I	525/625	525/625 SELECT
45	–	NC		105	–	NC	
46	–	VDD		106	–	VDD	
47	–	NC		107	–	NC	
48	–	NC		108	–	NC	
49	I	TEST	TEST	109	–	NC	
50	I	CRCK	BUS ADDRESS LATCH CLOCK	110	I	VCK	VIDEO CLOCK
51	–	GND		111	–	GND	
52	O	CRD7	BUS READ DATA 7	112	I	D2/D1	D2/D1 SELECT
53	O	CRD6	BUS READ DATA 6	113	I	DID1	DID BIT1
54	O	CRD5	BUS READ DATA 5	114	I	DID2	DID BIT2
55	O	CRD4	BUS READ DATA 4	115	I	ERDB	ERROR OVERRIDE FOR DEBUG
56	O	CRD3	BUS READ DATA 3	116	–	NC	
57	O	CRD2	BUS READ DATA 2	117	O	EDHF	EDH FULL FIELD ERROR
58	O	CRD1	BUS READ DATA 1	118	O	EDHA	EDH ACTIVE PICTURE ERROR
59	O	CRD0	BUS READ DATA 0	119	O	OVFS	TEST
60	–	VDD		120	–	VDD	

CXD8281Q (SONY) FLAT PACKAGE

C-MOS DIGITAL AUDIO TIME BASE COMPRESSION FOR SIF TRANSMITER

—TOP VIEW—

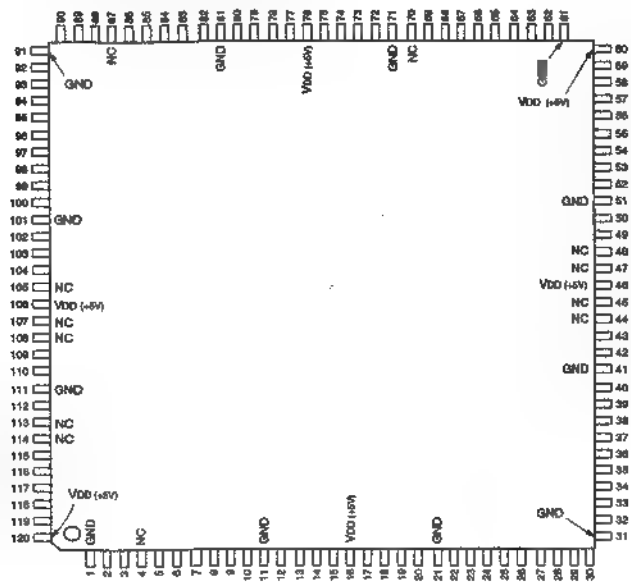

(VDD=+5V)

PIN NO.	I/O	SIGNAL	PIN NO.	I/O	SIGNAL	PIN NO.	I/O	SIGNAL	PIN NO.	I/O	SIGNAL
1	—	GND	31	—	GND	61	—	GND	91	—	GND
2	IU	$\overline{IT1}$	32	ID	C3/4	62	IU	CWA0 (LSB)	92	OT	AUX0 (LSB)
3	IU	$\overline{CLR}$	33	ID	C1/2	63	IU	CWA1	93	OT	AUX1
4	—	NC	34	ID	U3/4	64	IU	CWA2	94	OT	AUX2
5	O	OT1	35	ID	U1/2	65	IU	CWA3 (MSB)	95	OT	AUX3
6	O	OT2	36	ID	V3/4	66	IU	CWEN	96	OT	AUX4
7	O	OT3	37	ID	V1/2	67	IU	$\overline{IT3}$	97	OT	AUX5
8	O	OT4	38	ID	AD3/4	68	IU	$\overline{IT4}$	98	OT	AUX6
9	O	OT5	39	ID	AD1/2	69	IU	$\overline{IT5}$	99	OT	AUX7
10	O	OT6	40	ID	BCK	70	—	NC	100	OT	AUX8
11	—	GND	41	—	GND	71	—	GND	101	—	GND
12	O	OT7	42	ID	128CK	72	IU	DID0	102	OT	AUX9 (MSB)
13	O	OT8	43	IU	LRCK	73	IU	DID1	103	O	ADBT
14	O	OT9	44	—	NC	74	IU	LIM0	104	ID	$\overline{OEAUX}$
15	O	OT10	45	—	NC	75	IU	LIM1	105	—	NC
16	—	VDD	46	—	VDD	76	—	VDD	106	—	VDD
17	O	OT11	47	—	NC	77	IU	$\overline{CHS1}$	107	—	NC
18	O	OT12	48	—	NC	78	IU	$\overline{CHS2}$	108	—	NC
19	O	OT13	49	IU	$\overline{IT2}$	79	IU	$\overline{CHS3}$	109	IU	SYNC
20	O	OT14	50	IU	CWCK	80	IU	$\overline{CHS4}$	110	ID	VCK
21	—	GND	51	—	GND	81	—	GND	111	—	GND
22	IU	CHEX1	■	IU	CWD7 (MSB)	82	IU	DLY0 (LSB)	112	IU	D2/D1
23	IU	CHEX0	53	IU	CWD6	83	IU	DLY1	113	—	NC
24	IU	AFS	54	IU	CWD5	84	IU	DLY2	114	—	NC
25	IU	LRS	■	IU	CWD4	85	IU	DLY3	115	O	OT15
26	■	DIR	56	IU	CWD3	86	IU	DLY4 (MSB)	116	O	OT16
27	IU	20/16	57	IU	CWD2	87	—	NC	117	O	OT17
28	IU	ZCS	■	IU	CWD1	88	O	AUXT	118	O	OT18
29	ID	Z3/4	59	IU	CWD0 (LSB)	89	O	UDT	119	O	OT19
30	ID	Z1/2	60	—	VDD	90	O	ADFT	120	—	VDD

■ ; INPUT WITH PULL-UP REGISTER
D ; INPUT WITH PULL-DOWN REGISTER
OT ; TRI-STATE OUTPUT

INPUT (WITH PULL-DOWN REGISTER)

128CK	; DIGITAL AUDIO 128 x Fs CLOCK
AD1/2	; DIGITAL AUDIO CH–1/2 DATA
AD3/4	; DIGITAL AUDIO CH–3/4 DATA
BCK	; DIGITAL AUDIO BIT CLOCK (=64 x Fs)
C1/2	; DIGITAL AUDIO CH–1/2 CHANNEL STATUS ■
C3/4	; DIGITAL AUDIO CH–3/4 CHANNEL STATUS BIT
$\overline{OEAUX}$	; OUTPUT ENABLE FOR AUX0–9 (L)
U1/2	; DIGITAL AUDIO CH–1/2 USER DATA BIT
U3/4	; DIGITAL AUDIO CH–3/4 USER DATA BIT
V1/2	; DIGITAL AUDIO CH–1/2 VALIDITY FLAG
V3/4	; DIGITAL AUDIO CH–3/4 VALIDITY FLAG
VCK	; VIDEO CLOCK (=4Fsc) INPUT
Z1/2	; DIGITAL AUDIO CH–1/2 BLOCK SYNC (Z-FLAG)
Z3/4	; DIGITAL AUDIO CH–3/4 BLOCK SYNC (Z-FLAG)

INPUT (WITH PULL-UP REGISTER)

20/16	; DIGITAL AUDIO 20BIT/16BIT SELECT
AFS	; DIGITAL AUDIO FORMAT SELECT
$\overline{CHEX0, 1}$	; CHANNEL EXCHANGE 0, 1
$\overline{CHS1}$–$\overline{CHS4}$	; AUDIO CH1–CH4 OUTPUT SELECT (L)
$\overline{CLR}$	; POWER ON CLEAR (L)
CWA0–CWA3	; CHANNEL STATUS REGISTER WRITE ADDRESS 0–3
CWCK	; CHANNEL STATUS REGISTER WRITE CLOCK
CWD0–CWD7	; CHANNEL STATUS REGISTER WRITE DATA 0–7
CWEN	; CHANNEL STATUS REGISTER WRITE ENABLE
D2/D1	; VIDEO FORMAT D2/D1 SELECT
DID0, 1	; DATA ID BIT0, 1
DIR	; DIGITAL AUDIO MSB FIRST/LSB FIRST SELECT
DLY0–DLY4	; DELAY CONTROL BIT0–BIT3
$\overline{IT1}$–$\overline{IT5}$	; TEST (L)
LIM0, 1	; LINE MODE 0, 1
LRCK	; DIGITAL AUDIO L/R CLOCK (=Fs)
LRS	; DIGITAL AUDIO LEFT/RIGHT BIT POSITION SELECT
SYNC	; VIDEO SYNC INPUT
ZCS	; DIGITAL AUDIO Z-FLAG C-BIT SELECT

OUTPUT

ADBT	; AUX. DATA BLOCK TIMING
ADFT	; AUX. DATA FLAG TIMING
AUXT	; AUX. DATA TIMING
OT1–OT19	; TEST
UDT	; USER DATA TIMING

OUTPUT (TRI-STATE)

AUX0–AUX9	; AUX. DATA 0–9

CXD8337Q (SONY)

C-MOS DIGITAL VIDEO INPUT PROCESSOR

-TOP VIEW-

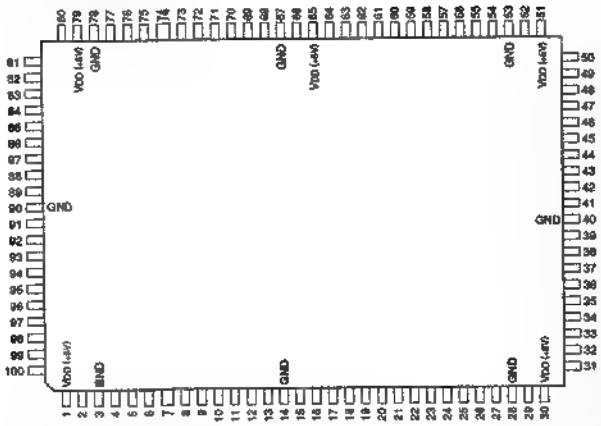

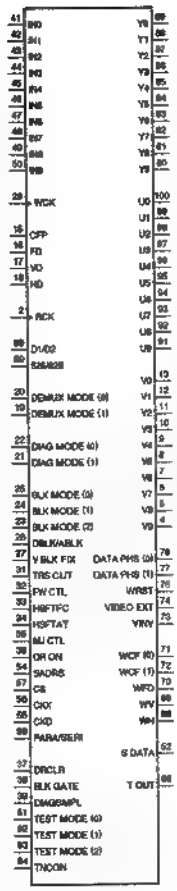

INPUT

525 / 625	; 625 / 625 SELECT (CONTROL REGISTER PARALLEL DATA)
BLK GATE	; BLANKING SIGNAL
BLK MODE (0-2)	; BLANKING MODE (0-2) (CONTROL REGISTER PARALLEL DATA)
CFP	; SYSTEM CFP (COLOR FRAME PULSE)
CKD	; CONTROL REGISTER SERIAL CLOCK
CKX	; CONTROL REGISTER OPERATION TIMING
CS	; CHIP SELECTOR
D1 / D2	; D1 / D2 SELECT (CONTROL REGISTER PARALLEL DATA)
DBLK / ABLK	; DIGITAL / ANALOG BLANKING SELECT (CONTROL REGISTER PARALLEL DATA)
DEMUX MODE (0-1)	; DEMULTIPLEX MODE (0-1) (CONTROL REGISTER PARALLEL DATA)
DIAG MODE (0-1)	; SELF DIAGNOSIS MODE (0-1) (CONTROL REGISTER PARALLEL DATA)
DIAGSMPL	; SELF DIAGNOSIS SAMPLE PULSE
DRCLR	; DYNAMIC ROUNDING RESET
DR ON	; DYNAMIC ROUNDING ON/OFF (CONTROL REGISTER PARALLEL DATA)
FD	; SYSTEM FD
FW CTL	; FLYWHEEL ON / OFF (CONTROL REGISTER PARALLEL DATA)
HD	; SYSTEM HD
HSFTAT	; AUTO COLOR MATCH (CONTROL REGISTER PARALLEL DATA)
HSFTFC	; FORCED 2CLK DELAY OF TRS (CONTROL REGISTER PARALLEL DATA)
IN (0-9)	; VIDEO SIGNAL (0-9)
MJ CTL	; MEMORY JUMP ON/OFF (CONTROL REGISTER PARALLEL DATA)
PARA / SERI	; PARALLEL SERIAL SELECT
RCK	; FIFO READ CLOCK
SADRS	; CONTROL REGISTER SIGNAL ADDRESS
TRS CUT	; TRS CANCELLATION (CONTROL REGISTER PARALLEL DATA)
V BLK FIX	; FIXED V BLANKING (CONTROL REGISTER PARALLEL DATA)
VD	; SYSTEM VD
WCK	; FIFO WRITE CLOCK

OUTPUT

DATA PHS (0-1)	; VIDEO PHASE INFORMATION (0-1)
T OUT	; TEST OUT (SET OPEN)
VIDEO EXT	; VIDEO CHECK FLAG
VINV	; V INVERT (D2 PAL)
WCF (0-1)	; DETECTED CF (0-1)
WFD	; DETECTED FD
WH	; DETECTED HD
WRST	; FIFO RESET PULSE
WV	; DETECTED VD

INPUT/OUTPUT

SDATA	; CONTROL REGISTER SERIAL DATA

(VDD = +5V)

PIN No.	I/O	SIGNAL	PIN No.	I/O	SIGNAL	PIN No.	I/O	SIGNAL	PIN No.	I/O	SIGNAL
1	—	VDD	26	I	DBLK ABLK	51	—	VDD	76	O	DATA PHS0
2	I	RCK	27	I	VBLK FIX	52	I/O	SDATA	77	O	DATA PHS1
3	—	GND	28	—	GND	53	—	GND	78	—	GND
4	O	V8	29	I	WCK	54	I	SADRS	79	—	VDD
5	O	V8	30	—	VDD	55	I	CKD	80	O	Y9
6	O	V7	31	I	TRS CUT	[redacted]	I	CKX	81	O	Y8
7	O	V6	32	I	FW CTL	[redacted]	I	CS	82	O	Y7
8	O	V5	33	I	HSFTFC	58	I	PARA/SERI	[redacted]	O	Y6
9	O	V4	34	I	HSFTAT	59	I	525/625	84	O	Y5
10	O	V3	35	I	MJ CTL	60	I	D1/D2	85	[redacted]	Y4
11	O	V2	36	I	DR ON	61	I	TEST0	86	[redacted]	Y3
12	O	V1	37	I	DR CLR	62	I	TEST1	87	O	Y2
13	O	V0	38	I	BLK GATE	63	I	TEST2	88	[redacted]	Y1
14	—	GND	39	I	DIAGSMPL	[redacted]	I	TNCON	89	O	Y0
15	I	CFP	40	—	GND	65	—	VDD	90	—	GND
16	I	FD	41	I	IN0	66	O	TOUT	[redacted]	O	U9
17	I	VD	42	I	IN1	67	—	GND	92	O	U8
18	I	HD	43	I	IN2	68	O	WH	93	O	U7
19	I	DEMUX MODE1	44	I	IN3	69	O	WV	94	O	U6
20	I	DEMUX MODE0	45	I	IN4	70	O	WFD	95	O	U5
21	I	DIAG MODE1	46	I	IN5	71	O	WCF0	96	O	U4
22	I	DIAG MODE0	47	I	IN6	72	O	WCF1	97	[redacted]	U3
[redacted]	I	BLK MODE2	48	I	IN7	73	O	VINV	98	O	U2
24	I	BLK MODE1	49	I	IN8	74	O	VIDEO EXT	99	O	U1
25	I	BLK MODE0	50	I	IN9	75	O	WRST	100	O	U0

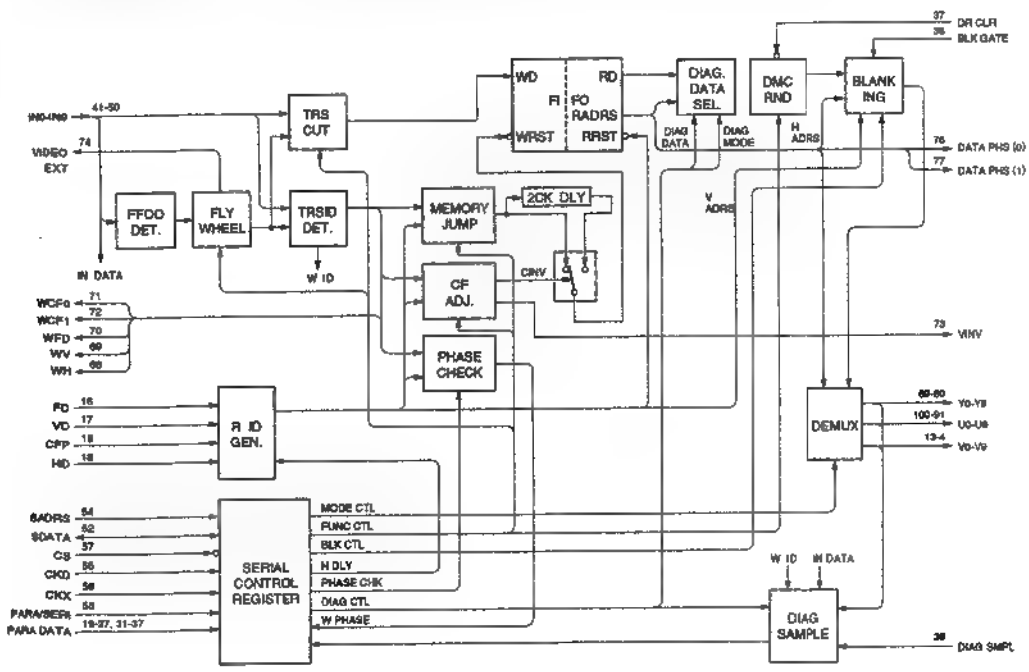

CXD8885Q (SONY)

C-MOS DIGITAL VIDEO OUTPUT PROCESSOR

-TOP VIEW-

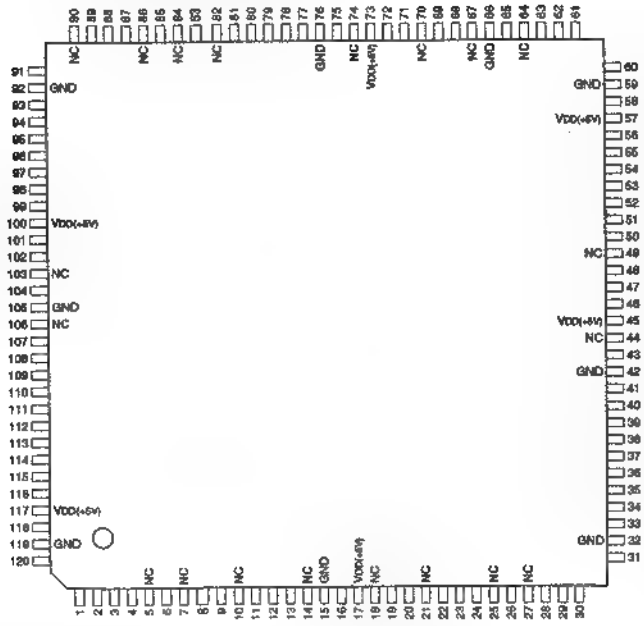

(VDD = +5V)

PIN NO.	I/O	SIGNAL	PIN NO.	I/O	SIGNAL	PIN NO.	I/O	SIGNAL
1	I	U0	41	I/O	SDATA	81	I	SYNC EN
2	I	U1	42	—	GND	82	—	NC
3	I	U2	43	I	CLK	83	I	AUTO TRS
4	I	U3	44	—	NC	84	—	NC
5	—	NC	45	—	VDD	85	I	CKINV
6	I	U4	46	O	O0	86	—	NC
7	—	NC	47	O	O1	87	I	CLIP
8	I	U5	48	O	O2	88	I	LIMIT
9	I	U6	49	—	NC	89	I	V BLK FIX
10	—	NC	50	O	O3	90	—	NC
11	I	U7	51	O	O4	91	I	DBLK / ABLK
12	I	U8	52	O	O5	92	—	GND
13	I	U9	53	O	O6	93	I	BLK MODE0
14	—	NC	54	O	O7	94	I	BLK MODE1
15	—	GND	55	O	O8	95	I	BLK MODE2
16	I	DIAG SMPL	56	O	O9	96	I	MUX MODE0
17	—	VDD	57	—	VDD	97	I	MUX MODE1
18	—	NC	58	O	CKO	98	I	525 / 625
19	I	V0	59	—	GND	99	I	D1 / D2
20	I	V1	60	O	DATA PHS0	100	—	VDD
21	—	NC	61	O	DATA PHS1	101	I	BLK GATE
22	I	V2	62	O	TRS JST	102	I	TRS SEL0
23	I	V3	63	O	SEL STAT1	103	—	NC
24	I	V4	64	—	NC	104	I	TRS SEL1
25	—	NC	65	O	SEL STAT0	105	—	GND
26	I	V5	66	—	GND	106	—	NC
27	—	NC	67	—	NC	107	I	Y0
28	I	V6	68	I	TEST MODE0	108	I	Y1
29	I	V7	69	I	TEST MODE1	109	I	Y2
30	I	V8	70	—	NC	110	I	Y3
31	I	V9	71	I	TEST MODE2	111	I	Y4
32	—	GND	72	I	TNCON	112	I	Y5
33	I	HD	73	—	VDD	113	I	Y6
34	I	FD	74	—	NC	114	I	Y7
35	I	CFP	75	O	TOUT	115	I	Y8
36	I	PARA / SERI	76	—	GND	116	I	Y9
37	I	CKX	77	I	RDCLR	117	—	VDD
38	I	CS	78	I	DR ON	118	I	EWRST
39	I	SADRS	79	I	TRS EN	119	—	GND
40	I	CKD	80	I	BURST EN	120	I	ERRST

INPUT

525 / 625	; 525 / 625 SELECT
AUTO TRS	; AUTO TRS ADD MODE
BLK GATE	; BLANKING SIGNAL
BLK MODE 0 - 2	; BLANKING MODE
BURST EN	; BURST ADD ENABLE
CKD	; SERIAL INTERFACE SERIAL DATA
CKINV	; CLOCK INVERT ENABLE
CKX	; CONTROL REGISTER OPERATION TIMING
CLIP	; WHITE CLIP AND DARK CLIP ENABLE
CLK	; SYSTEM CLOCK
CFP	; SYSTEM CFP (D2 MODEL)
CS	; CHIP SELECTOR
D1 / D2	; CONTROL REGISTER PARALLEL DATA
DBLK ABLK	; DIGITAL / ANALOG BLANKING SELECT
DIAG SMPL	; SELF DIAGNOSIS SAMPLE PULSE
DR ON	; ROUNDING ENABLE
ERRST	; INPUT READ RESET PULSE
EWRST	; INPUT WRITE RESET PULSE
FD	; SYSTEM FD (D1 MODEL)
HD	; SYSTEM HD
LIMIT	; LIMITER ENABLE
MUX MODE 0, 1	; MULTIPLEX MODE
PARA / SERI	; PARALLEL / SERIAL SELECT
RDCLR	; CLEAR PULSE
SADRS	; CONTROL REGISTER SIGNAL ADDRESS
SYNC EN	; SYNC ADD ENABLE
TEST MODE 0 - 2	; TEST POINT
TNCON	; TEST POINT
TRS EN	; TRS ADD ENABLE
TRS SEL 0, 1	; MANUAL MODE TRS MIX
V BLK FIX	; VERTICAL BLANKING LENGTH FIX
U0 - U9, Y0 - Y9, V0 - V9	; VIDEO SIGNAL

OUTPUT

CKO	; CLOCK
DATA PHS 0, 1	; OUTPUT VIDEO DATA PHASE
O0 - O9	; VIDEO SIGNAL
SET STAT 0, 1	; SYNC, TRS ADD TIMING
TOUT	; TEST POINT
TRS JST	; TRS PHASE CHECK PULSE

INPUT/OUTPUT

SDATA	; CONTROL REGISTER SERIAL DATA

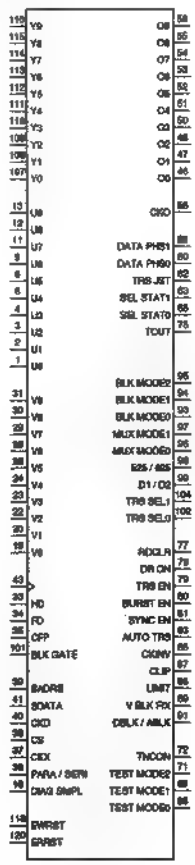

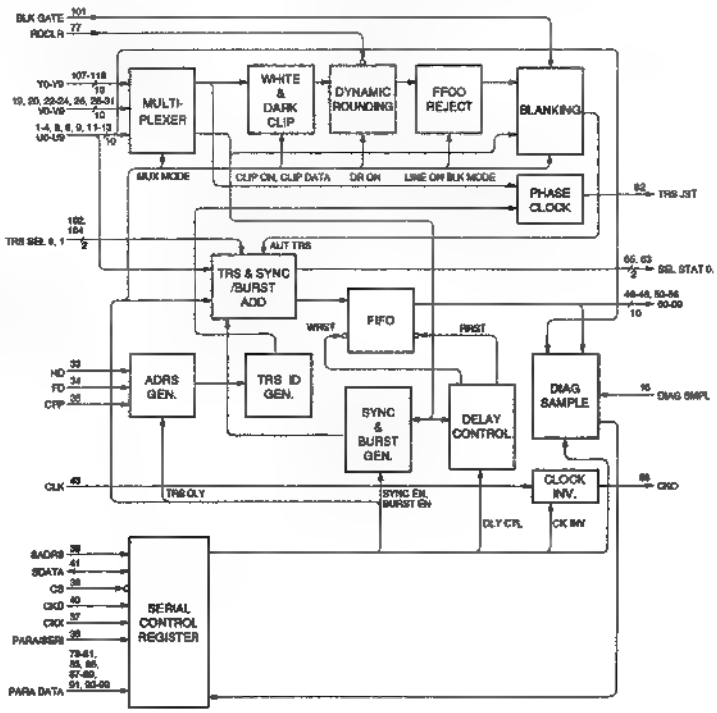

CXD8969AR (SONY)

C-MOS SDDI INTERFACE (GATE ARRAY)

- TOP VIEW -

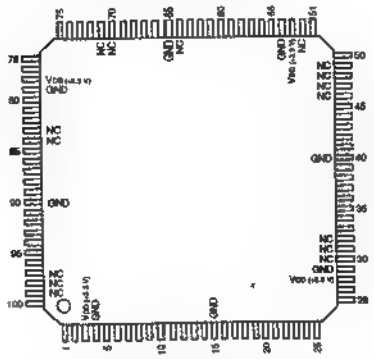

(VDD = +3.3 V)

PIN No.	I/O	SIGNAL	PIN No.	I/O	SIGNAL	PIN No.	I/O	SIGNAL	PIN No.	I/O	SIGNAL	PIN No.	I/O	SIGNAL
1	I	REFF	21	I	CADRS4	41	O	DOUT5	61	I	APDEP2	81	I	SOPMD
2	I	RST	22	I	CADRS5	42	O	DOUT6	62	O	ADEN2	82	I	CIFMD
3	—	VDD	23	I	CADRS6	43	O	DOUT7	63	O	AINT2	83	—	NC
4	—	GND	24	I	CADRS7	44	O	DOUT8	64	—	NC	84	—	NC
5	I/O	SYSIO0	25	O	SYSF	45	O	DOUT9	65	—	GND	85	I	DIN0
6	I/O	SYSIO1	26	O	SYSH	46	—	NC	66	O	SUOP1	86	I	DIN1
7	I/O	SYSIO2	27	O	SYSV	47	—	NC	67	O	SUOP0	87	I	DIN2
8	I/O	SYSIO3	28	—	VDD	48	—	NC	68	I	SUIP1	88	I	DIN3
9	I/O	SYSIO4	29	—	GND	49	—	NC	69	I	SUIP0	89	I	DIN4
10	I/O	SYSIO5	30	—	NC	50	O	PCERD	70	—	NC	90	—	GND
11	I/O	SYSIO6	31	—	NC	51	O	SWDET	71	—	NC	91	I	DIN5
12	I/O	SYSIO7	32	—	NC	52	—	NC	72	O	TP4	92	I	DIN6
13	I	STAT1	33	I	CENBL	53	—	VDD	73	O	TP3	93	I	DIN7
14	I	CCS	34	O	PRTYO	54	—	GND	74	O	TP2	94	I	DIN8
15	—	GND	35	O	DOUT0	55	I	APDEP0	75	O	TP1	95	I	DIN9
16	I	STAT0	36	O	DOUT1	56	O	ADEN0	76	O	TP0	96	I	PRTYI
17	I	STRB	37	O	DOUT2	57	O	AINT0	77	I	TEST	97	—	NC
18	I	CADRS1	38	O	DOUT3	58	I	APDEP1	78	—	VDD	98	—	NC
19	I	CADRS2	39	O	DOUT4	59	O	ADEN1	79	—	GND	99	—	NC
20	I	CADRS3	40	—	GND	60	O	AINT1	80	I	CK	100	I	REFH

INPUT

APDEP0 - APDEP2	; CH-0, 1, 2 DATA END
CADRS1 - CADRS7	; ADDRESS
CCS	; CHIP SELECT
CIFMD	; CPU I/F MODE SETTING
CK	; SYSTEM CLOCK
DIN0 - DIN9	; PARALLEL DATA
CENBL	; DIN0 - DIN9 OUTPUT ENABLE
PRTYI	; DIN0 - DIN9 PARITY
REFF	; REFERENCE FRAME
REFH	; REFERENCE H
RST	; SYSTEM RESET
SOPMD	; TX/RX MODE SETTING
STAT0, STAT1	; BUS STATUS 0, 1
STRB	; STROBE
SUIP0, SUIP1	; INPUT PORT 0, 1
TEST	; TEST FOR IC (GND CONNECT)

OUTPUT

ADEN0 - ADEN2	; CH-0, 1, 2 DATA ENABLE
AINT0 - AINT2	; CH-0, 1, 2 INTERRUPT
DOUT0 - DOUT9	; PARALLEL DATA
PCERD	; PAYLOAD CRCC ERROR DETECT
PRTYO	; DOUT0 - DOUT9 PARITY
SUOP0, SUOP1	; OUTPUT PORT 0, 1
SWDET	; SWITCHING DETECT
SYSF	; REFERENCE FRAME
SYSH	; REFERENCE H
SYSV	; V BLANKING
TP0 - TP4	; TEST POINT 0 - 4

INPUT/OUTPUT

SYSIO0 - SYSIO7	; DATA BUS

CY7C136-55JC (CYPRESS)

C-MOS 2Kx8-BIT DUAL-PORT STATIC RAM

- TOP VIEW -

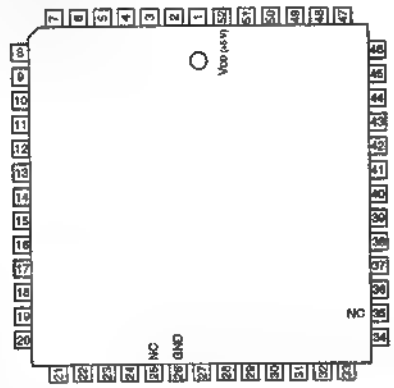

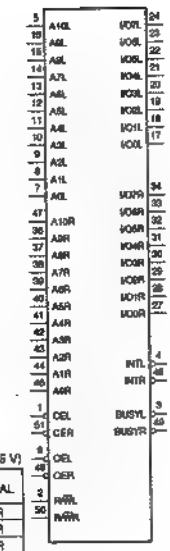

(VDD = +5 V)

PIN No.	I/O	SIGNAL	PIN No.	I/O	SIGNAL	PIN No.	I/O	SIGNAL	PIN No.	I/O	SIGNAL
1	I	CEL	14	I	A7L	27	I/O	I/O0R	40	I	A5R
2	I	R/WL	15	I	A9L	28	I/O	I/O1R	41	I	A4R
3	O	BUSYL	16	I	A9L	29	I/O	I/O2R	42	I	A3R
4	O	INTL	17	I/O	I/O0L	30	I/O	I/O3R	43	I	A2R
5	I	A10L	18	I/O	I/O1L	31	I/O	I/O4R	44	I	A1R
6	I	OEL	19	I/O	I/O2L	32	I/O	I/O5R	45	I	A0R
7	I	A0L	20	I/O	I/O3L	33	I/O	I/O6R	46	I	OER
8	I	A1L	21	I/O	I/O4L	34	I/O	I/O7R	47	I	A10R
9	I	A2L	22	I/O	I/O5L	35	—	NC	48	O	INTR
10	I	A3L	23	I/O	I/O6L	36	I	A9R	49	O	BUSYR
11	I	A4L	24	I/O	I/O7L	37	I	A8R	50	I	R/WR
12	I	A5L	25	—	NC	38	I	A7R	51	I	CER
13	I	A6L	26	—	GND	39	I	A6R	52	—	VDD

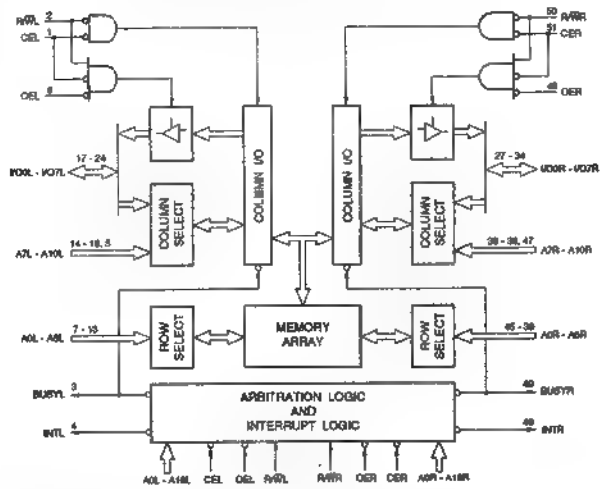

INPUT

A0L - A10L A0R - A10R	; ADDRESS
CEL, CER	; CHIP SELECT
OEL, OER	; OUTPUT ENABLE
R/WL, R/WR	; READ/WRITE STROBE

INPUT/OUTPUT

I/O0L - I/O7L I/O0R - I/O7R	; DATA

OUTPUT

BUSYL, BUSYR	; BUSY FLAG
INTL, INTR	; INTERRUPT FLAG

EPM7160ELC84-20 (ALTERA)CHIP CARRIER

C-MOS FIELD PROGRAMMABLE LOGIC CIRCUIT

– TOP VIEW –

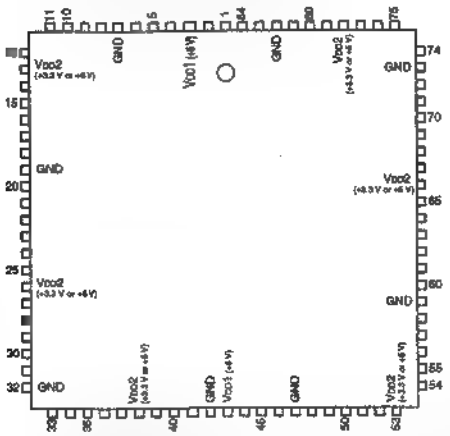

(Vcc1 = +5 V)
(Vcc2 = +3.3 V or +5 V)

PIN No.	I/O	SYMBOL	PIN No.	I/O	SYMBOL	PIN No.	I/O	SYMBOL	PIN No.	I/O	SYMBOL	PIN No.	I/O	SYMBOL
1	I	INPUT/GCLRn	18	I/O	I/O	35	I/O	I/O	52	I/O	I/O	69	I/O	I/O
2	I	INPUT/OE2/GCLK2	19	—	GND	36	I/O	I/O	53	—	Vcc2	70	I/O	I/O
3	—	Vcc1	20	I/O	I/O	37	I/O	I/O	54	I/O	I/O	71	I/O	I/O
4	I/O	I/O	21	I/O	I/O	38	—	Vcc2	55	I/O	I/O	72	—	GND
5	I/O	I/O	22	I/O	I/O	39	—	NC	56	I/O	I/O	73	I/O	I/O
6	—	NC	23	I/O	I/O	40	I/O	I/O	57	I/O	I/O	74	I/O	I/O
7	—	GND	24	I/O	I/O	41	I/O	I/O	58	I/O	I/O	75	I/O	I/O
8	I/O	I/O	25	I/O	I/O	42	—	GND	59	—	GND	76	I/O	I/O
9	I/O	I/O	26	—	Vcc2	43	—	Vcc1	60	I/O	I/O	77	I/O	I/O
10	I/O	I/O	27	I/O	I/O	44	I/O	I/O	61	I/O	I/O	78	—	Vcc2
11	I/O	I/O	28	I/O	I/O	45	I/O	I/O	62	I/O	I/O	79	—	NC
12	I/O	I/O	29	I/O	I/O	46	—	NC	63	I/O	NC	80	I/O	I/O
13	—	Vcc2	30	I/O	I/O	47	—	GND	64	I/O	I/O	81	I/O	I/O
14	I/O	I/O	31	I/O	I/O	48	I/O	I/O	65	I/O	I/O	82	—	GND
15	I/O	I/O	32	—	GND	49	I/O	I/O	66	—	Vcc2	83	I	INPUT/GCLK1
16	I/O	I/O	33	I/O	I/O	50	I/O	I/O	67	I/O	I/O	84	I	INPUT/OE1
17	I/O	I/O	34	I/O	I/O	51	I/O	I/O	68	I/O	I/O			

GCLK1 ; GLOBAL CLOCK1 INPUT
GCLK2 ; GLOBAL CLOCK2 INPUT
GCLRn ; GLOBAL CLEAR INPUT
INP ; INPUT
OE1 ; OUTPUT ENABLE1 INPUT
OE2 ; OUTPUT ENABLE2 INPUT
I/O ; INPUT/OUTPUT

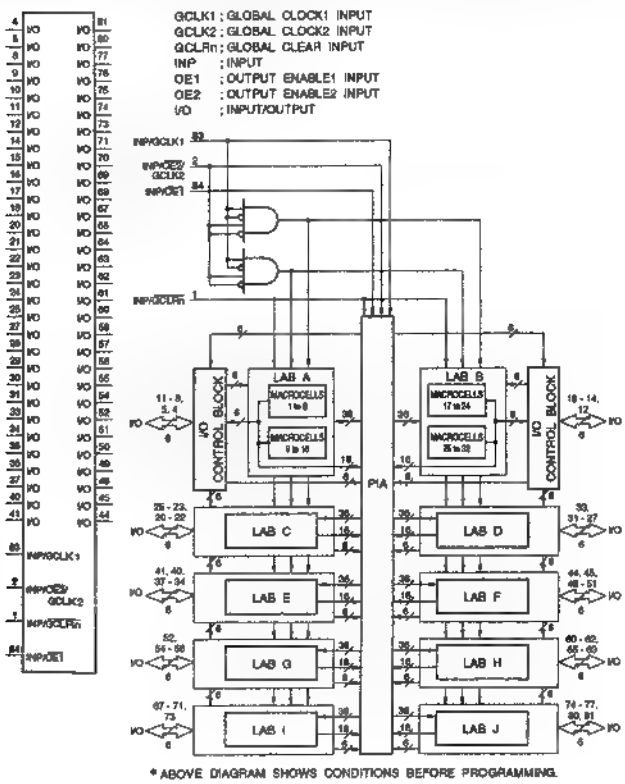

* ABOVE DIAGRAM SHOWS CONDITIONS BEFORE PROGRAMMING.

HD6417032F20 (HITACHI)

C-MOS 32-BIT RISC MICROCOMPUTER

–TOP VIEW–

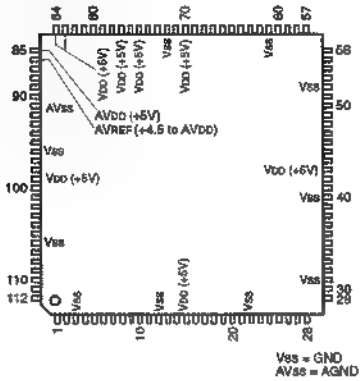

Vss = GND
AVss = AGND

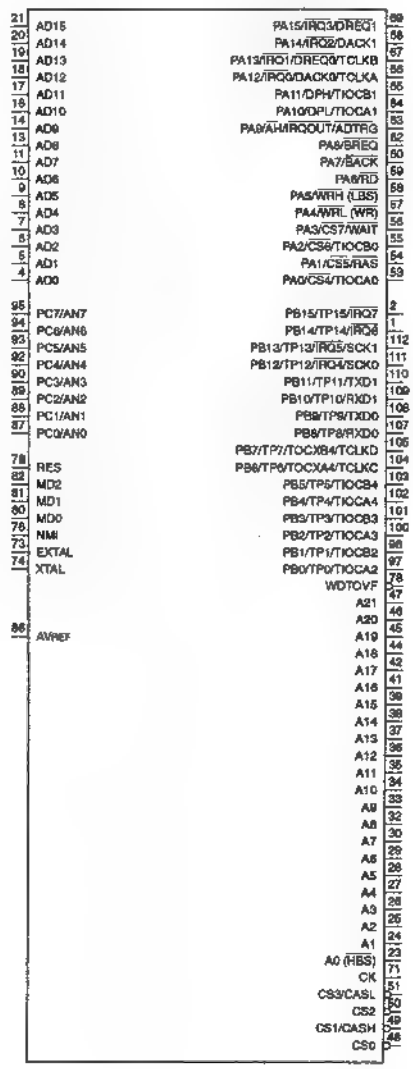

VDD = +5V
AVDD = +5V
AVREF = +4.5V to AVDD

VDD = GND
AVSS = AGND

PIN No.	I/O	SIGNAL	PIN No.	I/O	SIGNAL	PIN No.	I/O	SIGNAL
1	I/O	PB14/TP14/IRQ6	39	O	A15	77	-	VDD
2	I/O	PB15/TP15/IRQ7	40	-	VSS	78	O	WDTOVF
3	-	VSS	41	O	A15	79	I	RES
4	I/O	AD0	42	O	A17	80	I	MD0
5	I/O	AD1	43	-	VDD	81	I	MD1
6	I/O	AD2	44	O	A18	82	I	MD2
7	I/O	AD3	45	O	A19	83	-	VDD
8	I/O	AD4	46	O	A20	84	-	VDD
9	I/O	AD5	47	O	A21	85	-	AVDD
10	I/O	AD6	48	O	CS0	86	I	AVREF
11	I/O	AD7	49	O	CS1/CASH	87	I	PC0/AN0
12	-	VSS	50	O	CS2	88	I	PC1/AN1
13	I/O	AD8	■	■	CS3/CASL	89	I	PC2/AN2
14	I/O	AD9	52	-	VSS	90	I	PC3/AN3
15	-	VDD	53	I/O	PA0/CS4/TIOCA0	91	-	AVSS
16	I/O	AD10	54	I/O	PA1/CS5/RAS	92	I	PC4/AN4
17	I/O	AD11	55	I/O	PA2/CS6/TIOCB0	93	I	PC5/AN5
18	I/O	AD12	56	I/O	PA3/CS7/WAIT	94	I	PC6/AN6
19	I/O	AD13	57	I/O	PA4/WRL (WR)	95	I	PC7/AN7
20	I/O	AD14	58	I/O	PA5/WRH (LBS)	96	-	VSS
21	I/O	AD15	59	I/O	PA6/RD	97	I/O	PB0/TP0/TIOCA2
22	-	VSS	60	I/O	PA7/BACK	98	I/O	PB1/TP1/TIOCB2
23	O	A0 (HBS)	■	-	VSS	99	-	VDD
24	O	A1	62	I/O	PA8/BREQ	100	I/O	PB2/TP2/TIOCA3
25	O	A2	63	I/O	PA9/AH/IRQOUT/ADTRG	101	I/O	PB3/TP3/TIOCB3
26	O	A3	■	I/O	PA10/DPL/TIOCA1	102	I/O	PB4/TP4/TIOCA4
27	O	A4	65	I/O	PA11/DPH/TIOCB1	103	I/O	PB5/TP5/TIOCB4
28	O	A5	66	I/O	PA12/IRQ0/DACK0/TCLKA	104	I/O	PB6/TP6/TOCXA4/TCLKC
29	O	A6	■	I/O	PA13/IRQ1/DREQ0/TCLKB	105	I/O	PB7/TP7/TOCXB4/TCLKD
30	O	A7	68	I/O	PA14/IRQ2/DACK1	106	-	VSS
31	-	VSS	69	I/O	PA15/IRQ3/DREQ1	107	I/O	PB8/TP8/RXD0
32	O	A8	70	-	VDD	108	I/O	PB9/TP9/TXD0
33	O	A9	71	O	CK	109	I/O	PB10/TP10/RXD1
34	■	A10	72	-	VSS	110	I/O	PB11/TP11/TXD1
35	O	A11	73	I	EXTAL	111	I/O	PB12/TP12/IRQ4/SCK0
36	O	A12	74	I	XTAL	112	I/O	PB13/TP13/IRQ5/SCK1
37	O	A13	75	-	VDD			
38	O	A14	76	I	NMI			

INPUT

ADTRG	; A/D CONVERSION TRIGGER
AN0 - AN7	; ANALOG
BREQ	; BUS REQUEST
DREQ0, 1	; DMA REQUEST
EXTAL	; CRYSTAL OSCILLATION OR EXTERNAL CLOCK
IRQ0 - IRQ7	; MASKABLE INTERRUPT REQUEST
LBS	; LOW BYTE STROBE
MD0 - MD2	; MODE CONTROL
NMI	; NON-MASKABLE INTERRUPT REQUEST
RES	; RESET
RXD0, 1	; RECEIVE DATA
TCLKA - TCLKD	; ITU TIMER CLOCK
WAIT	; WAIT
WR	; WRIGHT
WRH	; HIGH ORDER WRIGHT
WRL	; LOW ORDER WRIGHT
XTAL	; CRYSTAL OSCILLATION

OUTPUT

A0 (HBS) - A21	; ADDRESS BUS
AH	; ADDRESS HOLD
BACK	; BUS REQUEST ACKNOWLEDGE
CASH	; HIGH ORDER COLUMN ADDRESS STROBE
CASL	; LOW ORDER COLUMN ADDRESS STROBE
CK	; SYSTEM CLOCK
CS0 - CS7	; CHIP SELECT
DACK0, 1	; DMA ACKNOWLEDGE
IRQOUT	; SLAVE INTERRUPT REQUEST
RAS	; ROW ADDRESS STROBE
RD	; READ
TOCXA4	; ITU OUTPUT COMPARE A (CH4)
TOCXB4	; ITU OUTPUT COMPARE B (CH4)
TP0 - TP15	; TIMING PATTERN
TXD0, 1	; TRANSMISSION DATA
WDTOVF	; WATCHDOG TIMER OVERFLOW

INPUT/OUTPUT

AD0 - AD15	; DATA BUS
DPH	; HIGH ORDER DATA BUS PARITY
DPL	; LOW ORDER DATA BUS PARITY
PA0 - PA15	; PORT A
PB0 - PB15	; PORT B
PC0 - PC7	; PORT C
SCK0, 1	; SERIAL CLOCK
TIOCA0 - TIOCA4	; ITU INPUT CAPTURE/OUTPUT COMPARE A (CH0-4)
TIOCB0 - TIOCB4	; ITU INPUT CAPTURE/OUTPUT COMPARE B (CH0-4)

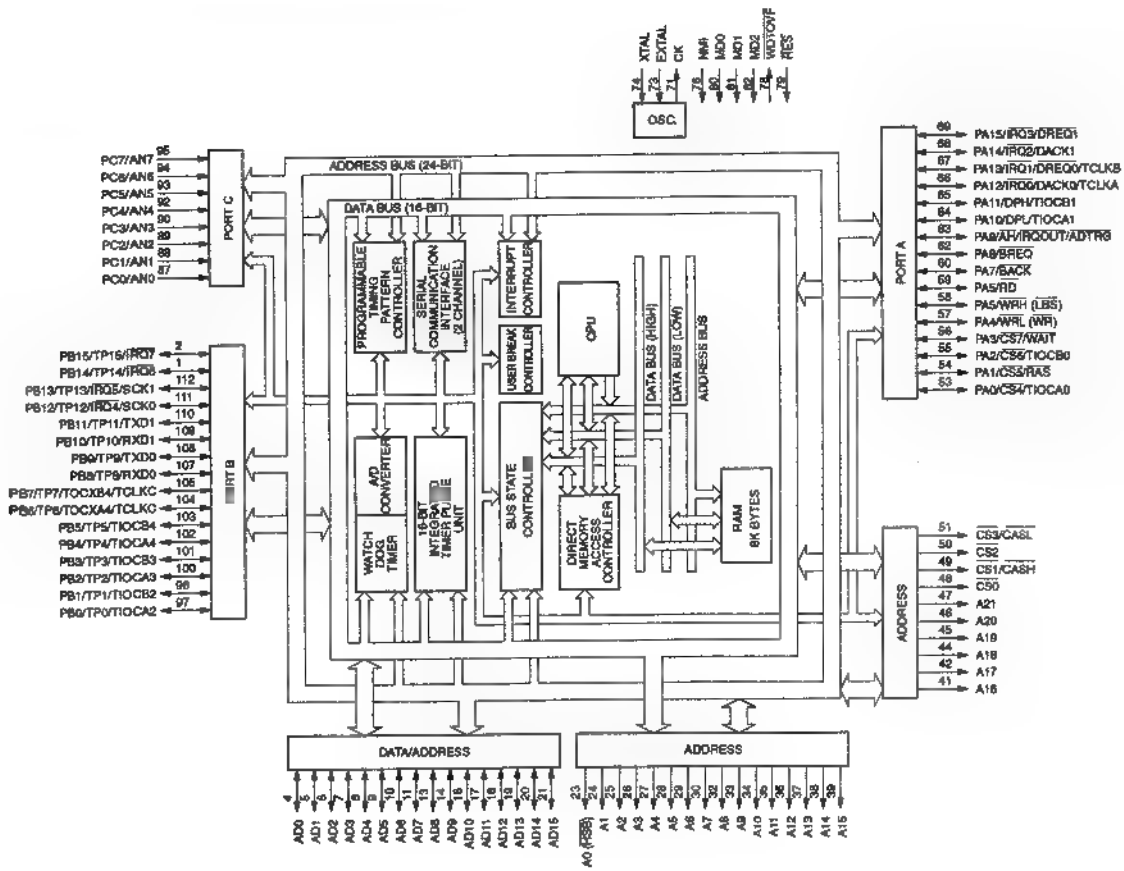

HM62V256LT8Z (HITACHI)

C-MOS SRAM
-TOP VIEW-

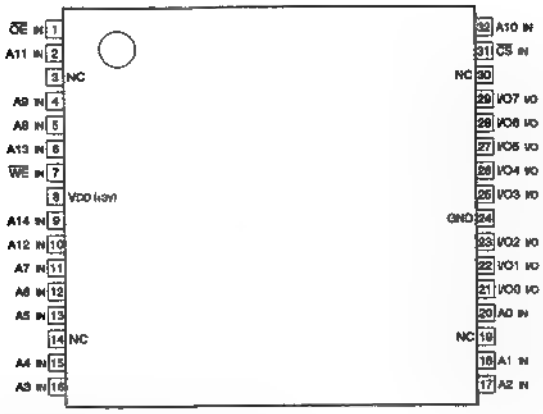

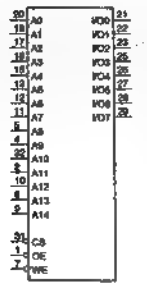

A0-A14 : ADDRESS INPUTS
CS : CHIP SELECT INPUT
I/O0-I/O7 : DATA INPUTS/OUTPUTS
OE : OUTPUT ENABLE INPUT
WE : WRITE ENABLE INPUT

CS	OE	WE	MODE	I/O PIN
1	×	×	NO SELECTION	HI-Z
0	1	1	OUTPUT DISABLE	HI-Z
0	0	1	READ	Dout
0	1	0	WRITE	Din
0	0	0	WRITE	Din

0 : LOW LEVEL
1 : HIGH LEVEL
× : DON'T CARE
HI-Z : HIGH IMPEDANCE

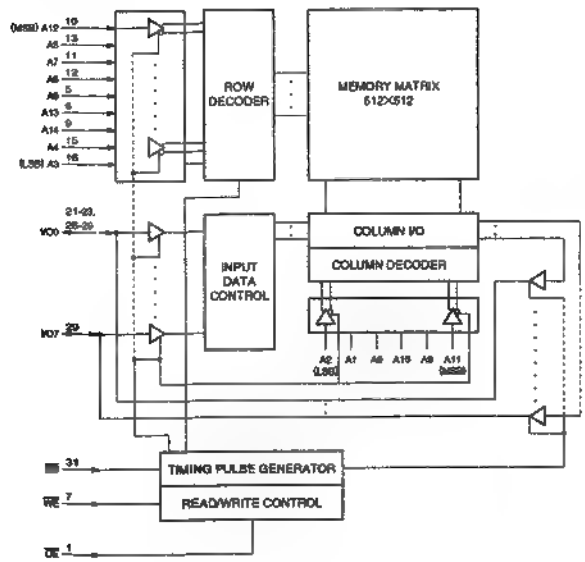

IDT74FCT821ATSO (IDT)FLAT PACKAGE

C-MOS 10-BIT BUS INTERFACE FLIP-FLOPS WITH 3-STATE OUTPUTS
—TOP VIEW—

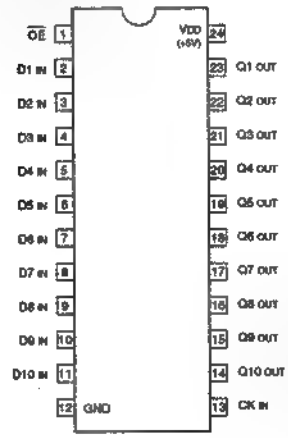

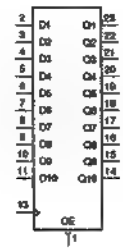

FUNCTION TABLE (EACH FLIP-FLOP)

INPUTS			OUTPUTS
OE	CK	D	Q
0	↑	1	1
0	↑	0	0
0	0	■	Q0
1	X	X	HI-Z

0 ; LOW LEVEL
1 ; HIGH LEVEL
X ; DON'T CARE
HI-Z ; HIGH IMPEDANCE

LOGIC DIAGRAM (POSITIVE LOGIC)

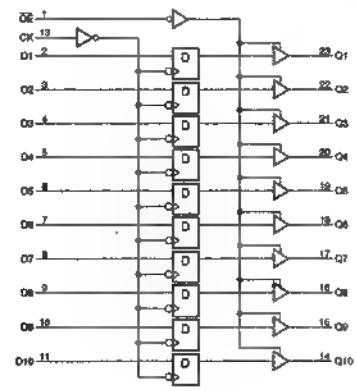

LB1721M (SANYO)
LB1721M-TE-R

8 STAGE DRIVER ARRAY
-TOP VIEW-

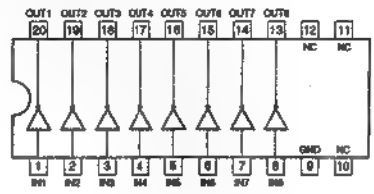

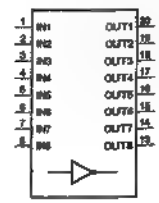

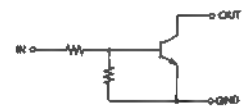

M27C1001-10F1 (SGS)
M27C1001-70F1 (SGS)

C-MOS 1M (128k × 8)-BIT UV EPROM
-TOP VIEW-

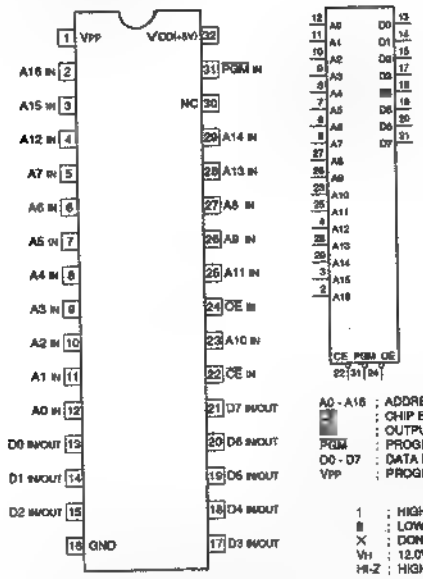

A0 - A16 ; ADDRESS INPUTS
E ; CHIP ENABLE INPUT
G ; OUTPUT ENABLE
PGM ; PROGRAM INPUT
D0 - D7 ; DATA INPUTS/OUTPUTS
VPP ; PROGRAMMING VOLTAGE INPUT

1 ; HIGH LEVEL
0 ; LOW LEVEL
X ; DON'T CARE
VH ; 12.0V ± 0.5V
HI-Z ; HIGH IMPEDANCE

MODE	CE	OE	A9	PGM	VPP	OUTPUT
READ	0	0	X	X	X	Dout
OUTPUT DISABLE	0	1	X	X	X	HI-Z
STANDBY	1	X	X	X	X	HI-Z
PROGRAM	0	1	X	0	VPP	Din
PROGRAM VERIFY	0	0	X	1	VPP	Dout
PROGRAM INHIBIT	1	X	X	X	VPP	HI-Z
ELECTRONIC SIGNATURE	0	0	VH	1	VPP	CODE

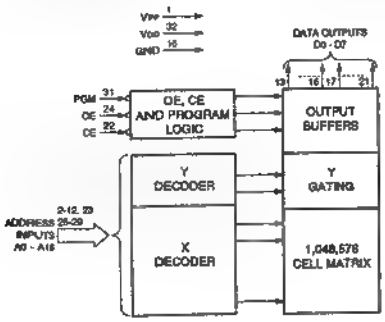

M51958AFP600D (MITSUBISHI)FLAT PACKAGE

VOLTAGE DETECT DELAY
— TOP VIEW —

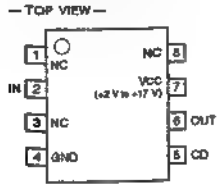

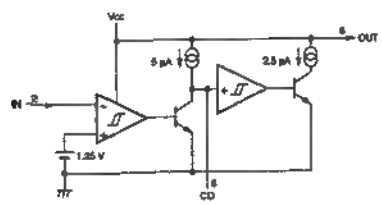

MC10124P (MOTOROLA)

ECL TTL-TO-ECL TRANSLATOR
-TOP VIEW-

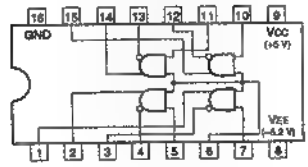

MC10125P (MOTOROLA)

ECL ECL-TO-TTL TRANSLATOR
-TOP VIEW-

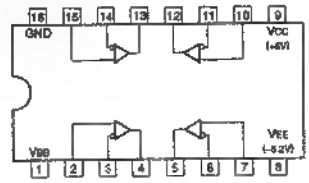

MC74F04M (MOTOROLA)FLAT PACKAGE
MC74F04M-T2

TTL INVERTER
—TOP VIEW—

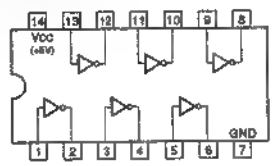

$Y = \overline{A}$

A	Y
0	1
1	0

0 ; LOW LEVEL
1 ; HIGH LEVEL

MC74HC4078F (MOTOROLA)
MC74HC4078FEL

C-MOS 8-INPUT OR / NOR GATE
-TOP VIEW-

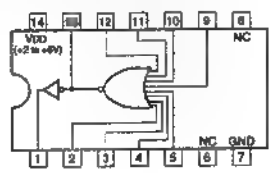

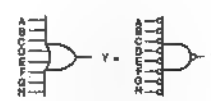

$Y = A+B+C+D+E+F+G+H$
$= \overline{\overline{A}\cdot\overline{B}\cdot\overline{C}\cdot\overline{D}\cdot\overline{E}\cdot\overline{F}\cdot\overline{G}\cdot\overline{H}}$

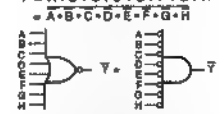

$\overline{Y} = \overline{A+B+C+D+E+F+G+H}$
$= \overline{A}\cdot\overline{B}\cdot\overline{C}\cdot\overline{D}\cdot\overline{E}\cdot\overline{F}\cdot\overline{G}\cdot\overline{H}$

A	B	C	D	E	F	G	H	Y	$\overline{Y}$
0	0	0	0	0	0	0	0	0	1
0	0	0	0	0	0	0	0	1	0
0	0	0	0	0	0	0	1	1	0
0	0	0	0	0	0	1	1	1	0
:	:	:	:	:	:	:	:	:	0
1	1	1	1	1	1	1	0	1	0
1	1	1	1	1	1	1	1	1	0

0 ; LOW LEVEL
1 ; HIGH LEVEL

SBX1601A (SONY)

8- OR 10-BIT PARALLEL-TO-SERIAL CONVERTER
-BOTTOM VIEW-

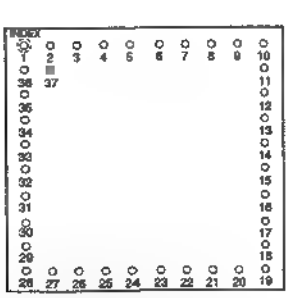

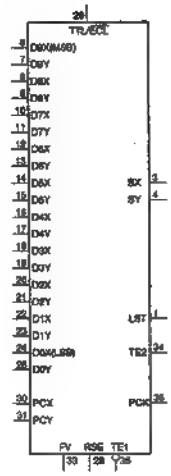

INPUT
D0X – D9X, D0Y – D9Y;
PARALLEL DATA INPUTS
PCX, PCY ; PARALLEL CLOCK INPUTS
FV ; VCO FREQ. ADJ. INPUT
RSE ; VCO RANGE SELECT INPUT (H : HIGH RANGE)
TE1 ; TEST TERMINAL (LOW = TEST)
TTL/ECL ; VCC FOR INPUT LEVEL SELECT
(+5 V = TTL, GND = ECL)

OUTPUT
LST ; PLL LOCK DETECT OUTPUT (H : LOCK)
PCK ; PARALLEL CLOCK OUTPUT
SX, SY ; SERIAL DATA OUTPUTS
TE2 ; TEST TERMINAL

VEE1 = –5 V
VEE2 = –3.5 V

PIN NO.	I/O	SIGNAL	PIN NO.	I/O	SIGNAL	PIN NO.	I/O	SIGNAL	PIN NO.	I/O	SIGNAL
1	O	LST	11	I	D7Y	21	I	D2Y	31	I	PCY
2	–	GND	12	I	D6X	22	I	D1X	32	–	GND
3	O	SX	13	I	D6Y	23	I	D1Y	33	I	■
4	O	SY	14	I	D5X	24	I	D0X(LSB)	34	O	TE2
5	–	GND	15	I	D5Y	25	I	D0Y	35	I	TE1
6	I	D9X(MSB)	16	I	D4X	26	–	VEE1	36	O	PCK
7	I	D9Y	17	I	D4Y	27	–	VEE2	37	–	NC
8	I	D8X	18	I	D3X	28	I	RSE			
9	I	D8Y	19	I	D3Y	29	–	TTL/ECL			
10	I	D7X	20	I	D2X	30	I	PCX			

SBX1602A (SONY)

8- OR 10-BIT SERIAL-TO-PARALLEL CONVERTER
–TOP VIEW–

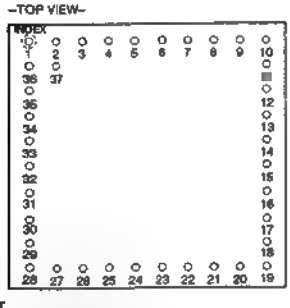

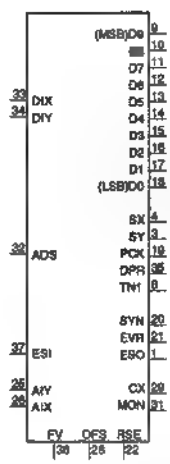

INPUT
ADS : SERIAL DATA SELECT INPUT (H : DIGITAL L : ANALOG)
AIX, AIY : EQUALIZER INPUTS
DIX, DIY : SERIAL DATA INPUTS
ESI : PLL SIGNAL INPUT
OFS : AGC OFFSET ADJ. INPUT
FV : VCO FREQ. ADJ. INPUT
RSE : VCO RANGE SELECT INPUT (H : HIGH RANGE)

OUTPUT
CX : EQUALIZER DETECT OUTPUT (L : NO INPUT)
D9-D0 : PARALLEL DATA OUTPUTS
DPR : SERIAL DATA DETECT OUTPUT (L: NO INPUT)
ESO : TEST NODE PLL ERROR SIGNAL OUTPUT
EVR : REFERENCE VOLTAGE FOR PARALLEL OUTPUT
MON : EQUALIZER MONITOR OUTPUT
PCK : PARALLEL CLOCK OUTPUT
SX,SY : SERIAL DATA OUTPUTS
SYN : TRS DETECT OUTPUT
TN1 : TEST TERMINAL

VEE1, 3 = –5V
VEE2 = –3.5V

PIN NO.	I/O	SIGNAL	PIN NO.	I/O	SIGNAL	PIN NO.	I/O	SIGNAL	PIN NO.	I/O	SIGNAL
1	O	ESO	11	O	D7	21	O	EVR	31	O	MON
2	–	GND	12	O	D6	22	I	RSE	32	I	ADS
3	O	SY	13	O	D5	23	–	VEE3	33	I	DIX
4	O	SX	14	O	D4	24	–	GND	34	I	DIY
5	–	GND	15	O	D3	25	I	AIY	35	O	DPR
6	O	TN1	16	O	D2	26	I	AIX	36	I	FV
7	–	VEE1	17	O	D1	27	–	GND	37	I	ESI
8	–	VEE2	18	O	D0 (LSB)	28	I	OFS			
9	O	D9 (MSB)	19	O	PCK	29	O	CX			
10	O	D8	20	O	SYN	30	–	GND			

PQ20VZ5U (SHARP)

POSITIVE VOLTAGE REGULATOR (300 mA)
-TOP VIEW-

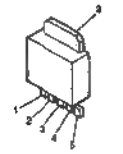

SN74ALS08NS (TI)FLAT PACKAGE
SN74ALS08NS-E05

TTL 2-INPUT POSITIVE-AND GATE
—TOP VIEW—

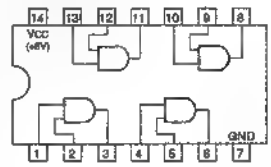

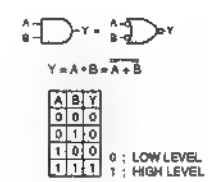

A	B	Y
0	0	0
0	1	0
1	0	0
1	1	1

0 ; LOW LEVEL
1 ; HIGH LEVEL

SN74ALS09NS (TI)FLAT PACKAGE

TTL 2-INPUT POSITIVE-AND GATE WITH OPEN-COLLECTOR
-TOP VIEW-

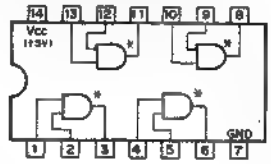

A	B	Y
0	0	0
0	1	0
1	0	0
1	1	1

0 ; LOW LEVEL
1 ; HIGH LEVEL

SN74ALS161BNS-E20 (TI)

TTL INVERTER BUFFER/DRIVER WITH OPEN-COLLECTOR
-TOP VIEW-

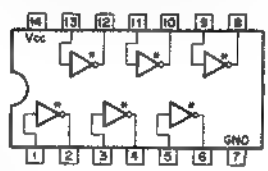

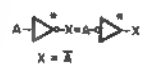

A	X
L	H
H	L

SN74ALS273NS (TI)FLAT PACKAGE
SN74ALS273NS-E05

TTL OCTAL D-TYPE FLIP-FLOPS WITH DIRECT RESET
-TOP VIEW-

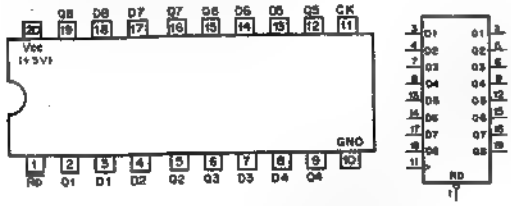

EACH FLIP – FLOP

INPUTS			OUT
Rd	CK	D	Q
0	X	X	0
1	↑	0	0
1	↑	1	1
1	0	X	Q0

0 ; LOW LEVEL
1 ; HIGH LEVEL
X; DON'T CARE

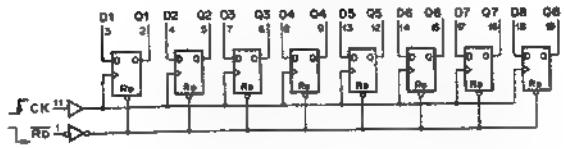

SN74ALS86NS (TI)FLAT PACKAGE
SN74ALS86NS-E20

TTL EXCLUSIVE OR GATE
-TOP VIEW-

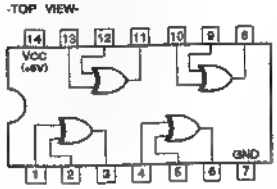

$Y = \overline{A} \cdot B + A \cdot \overline{B}$

A	B	Y
0	0	0
0	1	1
1	0	1
1	1	0

0 ; LOW LEVEL
1 ; HIGH LEVEL

SN74HC125ANS (TI)FLAT PACKAGE
SN74HC125ANS-E05
TC74VHC125F (TOSHIBA)FLAT PACKAGE
TC74VHC125F(EL)

C-MOS BUS BUFFER GATES WITH 3-STATE OUTPUT
-TOP VIEW-

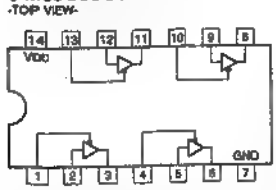

G	A	Y
0	0	0
0	1	1
1	X	HI-Z

0 ; LOW LEVEL
1 ; HIGH LEVEL
X ; DON'T CARE
HI-Z ; HIGH IMPEDANCE

NOTE :

TYPE	VDD
74AC/ 74VHC	+2 to +5.5V
74ACT/74HCT	+4.5 to +5.5V
74LCX	+2 to +3.6V
74LVT/74LVC	+2.7 to +3.6V
OTHER TYPES	+2 to +6V

SN74HC21ANS (TI)FLAT PACKAGE
SN74HC21ANS-E05

C-MOS DUAL 4-INPUT POSITIVE AND GATE
—TOP VIEW—

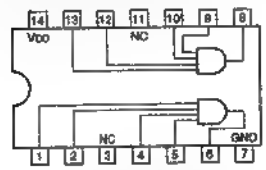

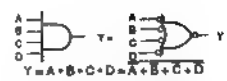

A	B	C	D	Y
0	0	0	0	0
0	0	0	1	0
0	0	1	0	0
0	0	1	1	0
0	1	0	0	0
1	1	1	1	1
1	1	0	1	0
1	1	1	0	0
1	1	1	1	1

0 ; LOW LEVEL
1 ; HIGH LEVEL

NOTE:

TYPE	VDD
HC	+2V to + 6V
VHC	+2V to + 5.5V

SN74HC595ANS (TI)FLAT PACKAGE
SN74HC595ANS-E05

C-MOS 8-BIT SERIAL-INPUT/SERIAL- OR PARALLEL-OUTPUT
SHIFT REGISTER WITH LATCHED 3-STATE OUTPUT
—TOP VIEW—

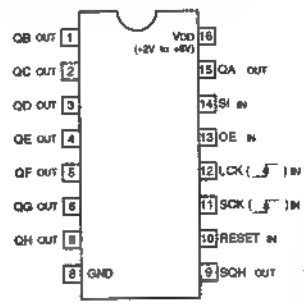

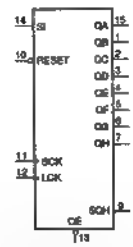

OE ; OUTPUT ENABLE INPUT
LCK ; LATCH CLOCK INPUT
SCK ; SHIFT CLOCK INPUT
RESET ; SHIFT-REGISTER RESET INPUT
SI ; SERIAL IN
QA-QH ; PARALLEL OUTPUT
SQH ; SERIAL OUT

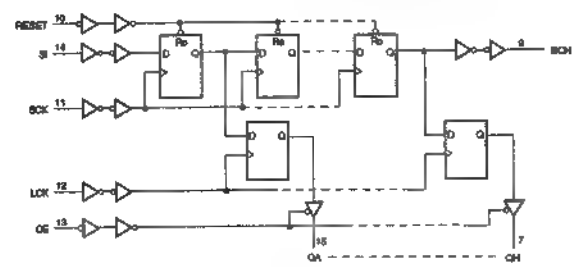

SN74LS125ANS (TI)FLAT PACKAGE
SN74LS125ANS-E05

TTL BUS BUFFER GATES WITH 3-STATE OUTPUTS
-TOP VIEW-

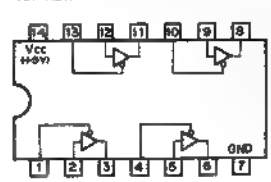

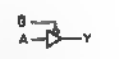

G	A	Y
0	0	0
0	1	1
1	X	HI-Z

0 ; LOW LEVEL
1 ; HIGH LEVEL
X ; DON'T CARE
HI-Z ; HIGH IMPEDANCE

TC74HC123AF (TOSHIBA)FLAT PACKAGE
TC74HC123AF(EL)

C-MOS DUAL RETRIGGERABLE MONOSTABLE MULTIVIBRATORS

-TOP VIEW-

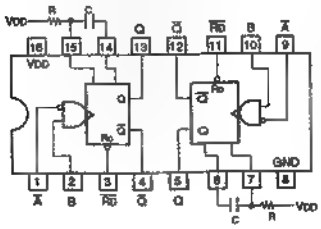

INPUTS			OUTPUTS	
Rd	A	B	Q	$\bar{Q}$
0	X	X	0	1
1	↑	X	0	1
1	X	0	0	1
1	0	↓	⊓	⊓
1	⊓	1	⊓	⊓
↓	0	1	⊓	⊓

0 : LOW LEVEL
1 : HIGH LEVEL
X : DON'T CARE

OUTPUT PULSE WIDTH = 0.46 CR

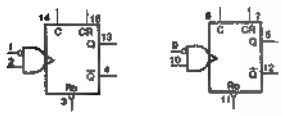

NOTE :

TYPE	VDD
TC74HC123AF	+5V
TC74VHC	+2V to +5.5V
OTHER TYPES	+2V to +6V

TC7SH04FU (TOSHIBA)CHIP PACKAGE
TC7SH04FU-TE85R

C-MOS INVERTER

-TOP VIEW-

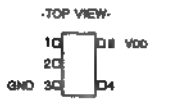

Y = $\bar{A}$

A	Y
0	1
1	0

0 ; LOW LEVEL
1 ; HIGH LEVEL

TYPE	VDD
7S04F 7SU04F 7SU04FU	+2 to +6V
4S69F 4SU69F	+3 to +18V
7SH04FU 7SHU04FU	+2 to +5.5V

TC7SH32FU-TE85R (TOSHIBA)FLAT PACKAGE

C-MOS 2-INPUT OR GATE

-TOP VIEW-

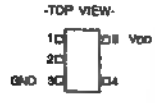

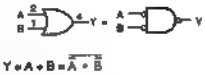

Y = A + B = $\overline{\bar{A} \cdot \bar{B}}$

A	B	Y
0	0	0
0	1	1
1	0	1
1	1	1

0 ; LOW LEVEL
1 ; HIGH LEVEL

TYPE	VDD
7S32F 7S32FU	+2 to +6V
4S71F	+3 to +18V
7SH32FU	+2 to +5.5V

TK11230AMTL (TOKO) +3V

REGULATOR USED FOR POWER SUPPLY

—TOP VIEW—

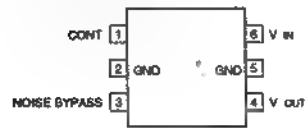

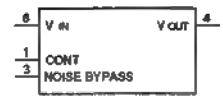

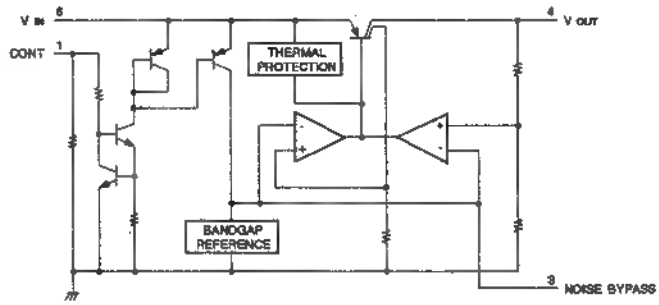

TK11233AUTB (TOKO)

REGULATOR USED FOR POWER SUPPLY

-TOP VIEW-

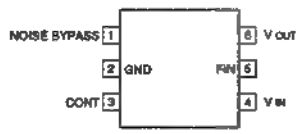

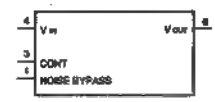

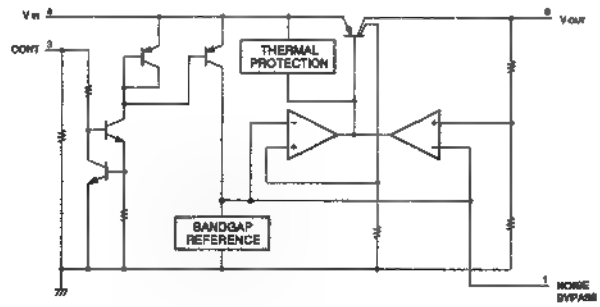

TL062CPS (TI)FLAT PACKAGE
TL062CPS-E05

DUAL OPERATIONAL AMPLIFIER

—TOP VIEW—

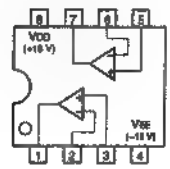

TMS418160-60DZ (TI)

C-MOS 16M(1,048,576X16)-BIT HIGH SPEED DYNAMIC RAM

-TOP VIEW-

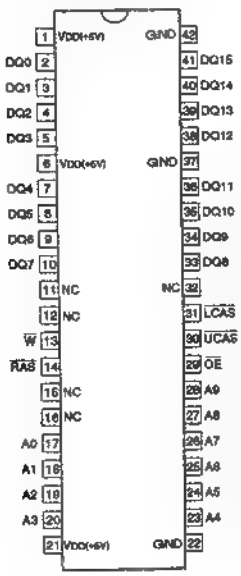

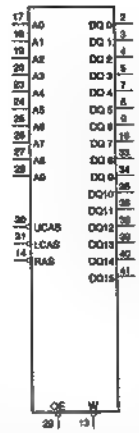

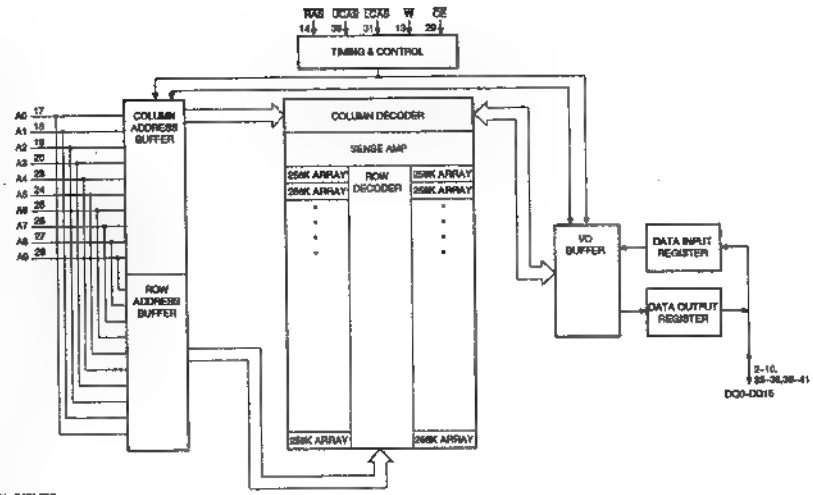

A0–A9	:	ADDRESS INPUTS
DQ0–DQ15	:	DATA INPUTS/OUTPUTS
LCAS,UCAS	:	COLUMN ADDRESS CONTROL INPUTS
RAS	:	ROW ADDRESS CONTROL INPUT
OE	:	OUTPUT ENABLE INPUT
W	:	WRITE ENABLE INPUT

UPD4218160LE-60

C-MOS 16M(1,048,576x16)-BIT DRAM

-TOP VIEW-

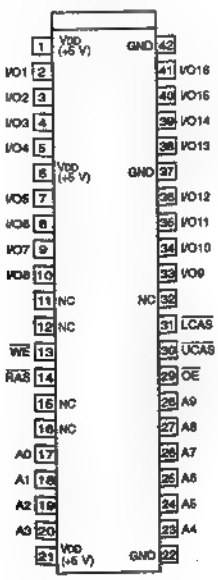

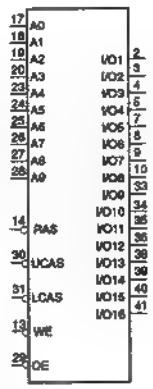

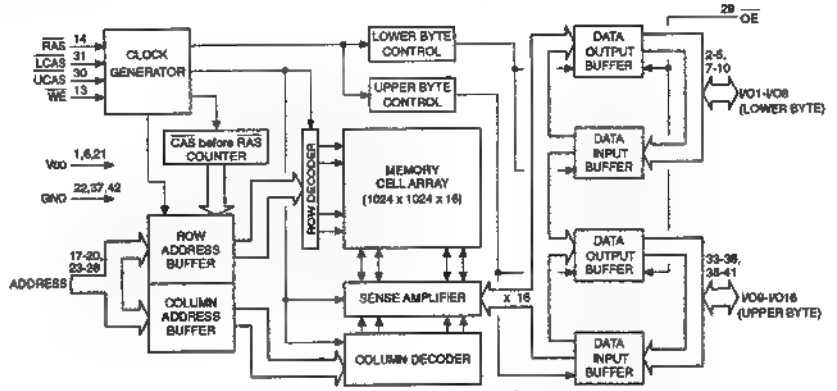

INPUT

A0-A9	:	ADDRESS INPUTS
RAS	:	ROW ADDRESS STROBE
UCAS	:	COLUMN ADDRESS STROBE(UPPER)
LCAS	:	COLUMN ADDRESS STROBE(LOWER)
WE	:	WRITE ENABLE
OE	:	OUTPUT ENABLE

INPUT/OUTPUT

I/O1-I/O16	:	DATA INPUTS/OUTPUTS

ZA4024 (TI)

SIGNAL PROCESSOR FOR DIGITAL VCR

-TOP VIEW-

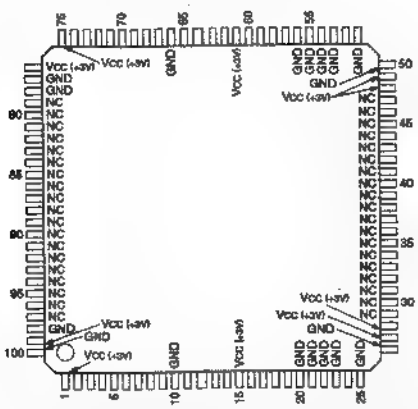

(Vcc = +3V)

PIN No.	I/O	SIGNAL	PIN No.	I/O	SIGNAL	PIN No.	I/O	SIGNAL	PIN No.	I/O	SIGNAL	PIN No.	I/O	SIGNAL
1	—	Vcc	21	—	GND	41	—	NC	61	I	Vcc	81	—	NC
2	O	DO0	22	—	GND	42	—	NC	62	I	CLR	82	—	NC
3	O	DO1	23	—	GND	43	—	NC	63	I	WS	83	—	NC
4	O	DO2	24	I	RFSEL	44	—	NC	64	I	CKW	84	—	NC
5	O	DO3	25	—	GND	45	—	NC	65	I	WE	85	—	NC
6	O	DO4	26	—	GND	46	—	NC	66	—	GND	86	—	NC
7	O	DO5	27	—	Vcc	47	—	NC	67	I	DIN7	87	—	NC
8	O	DO6	28	—	Vcc	48	—	Vcc	68	I	DIN6	88	—	NC
9	O	DO7	29	—	NC	49	—	Vcc	69	I	DIN5	89	—	NC
10	—	GND	30	—	NC	50	—	GND	70	I	DIN4	90	—	NC
11	I	OE	31	—	NC	51	—	GND	71	I	DIN3	91	—	NC
12	I	CKR	32	—	NC	52	I	WFSEL	72	I	DIN2	92	—	NC
13	I	RS	33	—	NC	53	—	GND	73	I	DIN1	93	—	NC
14	I	RFSH	34	—	NC	54	—	GND	74	I	DIN0	94	—	NC
15	—	Vcc	35	—	NC	55	—	GND	75	—	Vcc	95	—	NC
16	I	RA0	36	—	NC	56	—	GND	76	—	Vcc	96	—	NC
17	I	RA1	37	—	NC	57	I	WA3	77	—	GND	97	—	NC
18	I	RA2	38	—	NC	58	I	WA2	78	—	GND	98	—	GND
19	I	RA3	39	—	NC	59	I	WA1	79	—	NC	99	—	Vcc
20	—	GND	40	—	NC	60	I	WA0	80	—	NC	100	—	GND

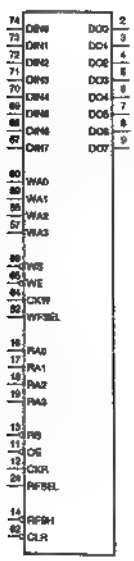

DIN0 - DIN7 ; DATA INPUTS
DO0 - DO7 ; DATA OUTPUTS
CKR ; READ CLOCK INPUT
CKW ; WRITE CLOCK INPUT
CLR ; RESET INPUT
OE ; OUTPUT ENABLE INPUT
RA0 - RA3 ; READ ADDRESS INPUT
RFSEL ; READ FIELD SELECT INPUT
RFSH ; REFRESH CONTROL INPUT
RS ; READ ADDRESS STOROBE INPUT
WA0 - WA3 ; WRITE ADDRESS INPUTS
WE ; WRITE ENABLE INPUT
WFSEL ; WRITE FIELD SELECT INPUT
WS ; WRITE ADDRESS STOROBE INPUT

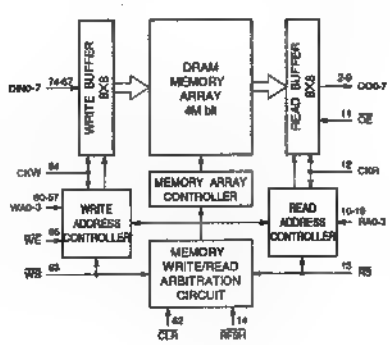

CXD2190R-T6 (SONY)

DIGITAL VCR AUDIO REC/PB SIGNAL PROCESSOR

-TOP VIEW-

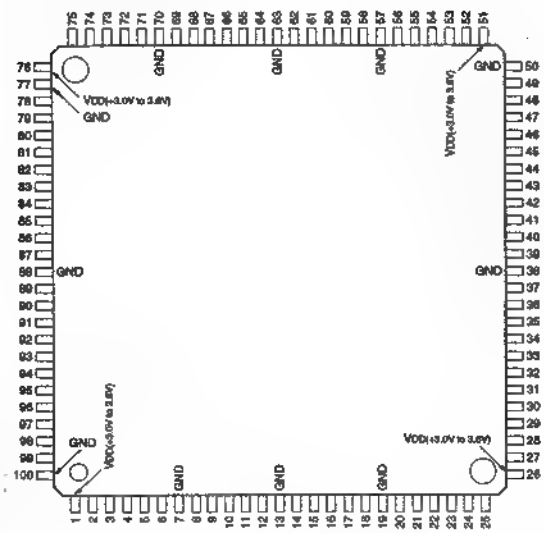

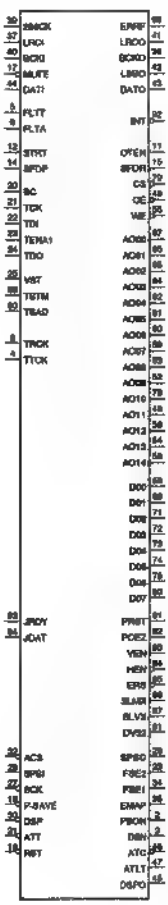

INPUT
256K ; 256fs CLOCK INPUT
ACS ; COMMUNICATION CHIP SELECT (L = ACTIVE) INPUT
ATT ; AUTO ATTENUATION INTERFACE CHIP SELECT INPUT
BCKI ; 64fs INPUT
DATI ; AUDIO DATA INPUT
DSP ; ADSP INTERFACE CHIP SELECT INPUT
FLTA ; FRAME SIGNAL FOR RECORDING INPUT
FLTT ; FRAME SIGNAL FOR TRANSMISSION AND PLAYBACK INPUT
JDAT ; EXTERNAL DEVICE INTERFACE INPUT
JRDY ; EXTERNAL DEVICE INTERFACE INPUT
LRCI ; fs CLOCK INPUT
MUTE ; DIRECT MUTE INPUT (L = MUTE)
P-SAVE ; POWER SAVE INPUT (L = POWER SAVE)
RST ; RESET INPUT (L = RESET)
SCK ; SYSTEM CLOCK INPUT
SFDP ; PLAYBACK DATA INPUT
SPSI ; COMMUNICATION DATA INPUT
STRT ; REC/PB DATA COMMUNICATION START PULSE INPUT
TRCK ; MAIN CLOCK INPUT (NTSC = 19.1256MHz, PAL = 18.144MHz)
TSAD ; FOR TEST
TSTM ; FOR TEST
TTCK ; AUTO ATTENUATION AND ADSP INTERFACE CLOCK INPUT
VST ; FOR TEST

OUTPUT
ATC ; AUTO ATTENUATION INTERFACE CLOCK OUTPUT
ATLT ; AUTO ATTENUATION INTERFACE LATCH PULSE OUTPUT
AO00 - AO14 ; EXTERNAL RAM ADDRESS OUTPUT
BCKO ; 64fs OUTPUT
CS ; EXTERNAL RAM CHIP SELECT SIGNAL OUTPUT
PSON ; MICROCOMPUTER INTERFACE SERIAL/PARALLEL OUTPUT (WORD2/BIT0)
DATO ; AUDIO DATA OUTPUT
DIN ; MICROCOMPUTER INTERFACE SERIAL/PARALLEL OUTPUT (WORD2/BIT1)
DSPO ; ADSP INTERFACE CLOCK OUTPUT
OV32 ; EXTERNAL DEVICE INTERFACE OUTPUT
EMPA ; MICROCOMPUTER INTERFACE SERIAL/PARALLEL OUTPUT (WORD2/BIT3)
ERRF ; PB AUDIO DATA ERROR ID SIGNAL OUTPUT
ERS ; EXTERNAL DEVICE RESET OUTPUT
FSE1 ,FSE2 ; MICROCOMPUTER INTERFACE SERIAL/PARALLEL OUTPUT (WORD2/BIT4, 5)
HEN ; EXTERNAL DEVICE INTERFACE OUTPUT
INT ; PHASE COMPARATOR CLOCK OUTPUT
LRCO ; fs OUTPUT
LSBO ; AUDIO DATA OUTPUT (LSB FIRST)
OE ; EXTERNAL RAM OUTPUT ENABLE SIGNAL OUTPUT
OTEN ; ENABLE OUTPUT FOR RECORDING DATA TRANSMISSION
PDEZ ; EXTERNAL DEVICE INTERFACE OUTPUT
PRST ; EXTERNAL DEVICE INTERFACE OUTPUT
SFDO ; RECORDING DATA OUTPUT
SLVX ; EXTERNAL DEVICE INTERFACE OUTPUT
SLXM ; EXTERNAL DEVICE INTERFACE OUTPUT
SPSO ; COMMUNICATION DATA OUTPUT
TBIS ; FOR TEST
TNOM ; FOR TEST
TSTN ; FOR TEST
VEN ; EXTERNAL DEVICE INTERFACE OUTPUT
WE ; EXTERNAL RAM WRITE ENABLE SIGNAL OUTPUT

INPUT/OUTPUT
D00 - D07 ; EXTERNAL RAM DATA INPUT/OUTPUT
TSCK ; FOR TEST
TSDA ; FOR TEST
TSG ; FOR TEST

DIGITAL VCR AUDIO REC/PB SIGNAL PROCESSOR

-TOP VIEW-

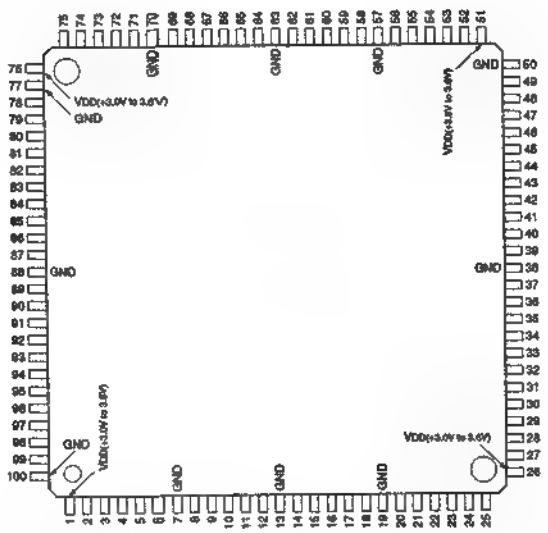

PIN NO.	I/O	SIGNAL	PIN NO.	I/O	SIGNAL	PIN NO.	I/O	SIGNAL
1	—	VDD	35	O	EMAP	69	I/O	D01
2	O	PBON	36	O	SCKO	70	—	GND
3	O	DIIN	37	I	LRCI	71	I/O	D02
4	I	TTCK	38	—	GND	72	I/O	D03
5	I	FLTT	39	I	256CK	73	I/O	D04
6	I	FLTA	40	I	BCKI	74	I/O	D05
7	—	GND	41	O	LRCO	75	I/O	D06
8	I	TRCK	42	O	LSBO	76	—	VDD
9	I/O	TSDA	43	O	DATO	77	—	GND
10	I/O	TSCK	44	I	DATI	78	O	AO10
11	O	OTEN	45	O	DSPO	79	O	CS
12	I	STRT	46	O	ATC	80	I/O	D07
13	—	GND	47	O	ATLT	81	O	PRST
14	I	SFDP	48	O	AO11	82	O	PCEZ
15	O	SFDR	49	O	OE	83	O	VEN
16	I	P-SAVE	50	—	GND	84	O	HEN
17	I	MUTE	51	—	VDD	85	O	ERS
18	I	RST	52	O	AO09	86	O	SLMX
19	—	GND	53	O	AO08	87	O	SLVX
20	—	BC	54	O	AO13	88	—	GND
21	I	TCK	55	O	WE	89	I	TSTM
22	—	TDI	56	O	AO14	90	I	TSAD
23	—	TENA1	57	—	GND	91	O	OV32
24	—	TDO	58	O	AO12	92	O	INT
25	I	VST	59	O	AO07	93	I	JRDY
26	—	VDD	60	O	AO06	94	I	JDAT
27	I	SCK	61	O	AO05	95	O	TNOM
28	I	SPSI	62	O	AO04	96	O	TSTN
29	O	SPSO	63	—	GND	97	O	TBIS
30	I	DSP	64	O	AO03	98	O	ERRF
31	I	ATT	65	O	AO02	99	I/O	TSG
32	I	ACS	66	O	AO01	100	—	GND
33	O	FSE2	67	O	AO00			
34	O	FSE1	68	I/O	D00			

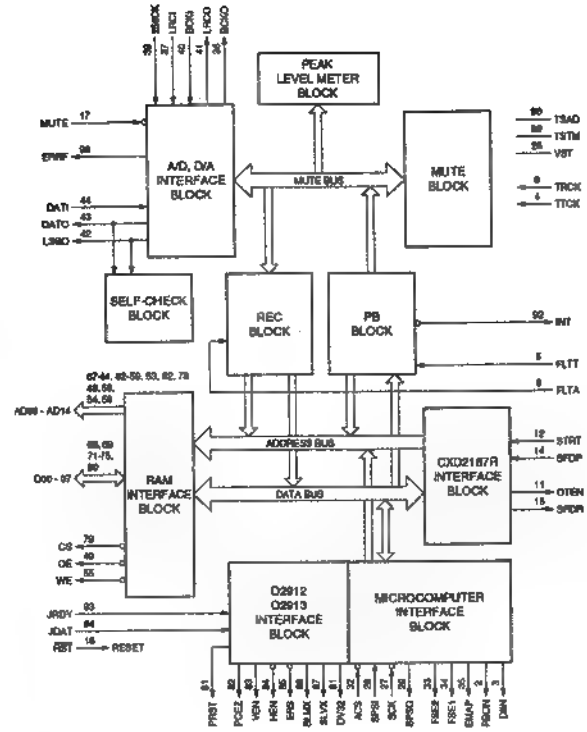

UPD485505G-35 (NEC) FLAT PACKAGE

C-MOS 40K (5,048 x 8)-BIT FIFO MEMORY

—TOP VIEW—

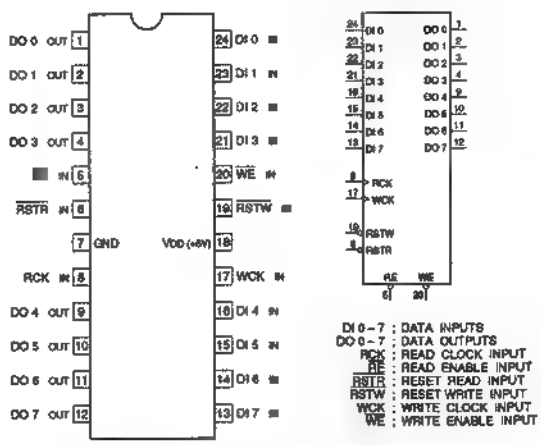

DI 0 – 7 : DATA INPUTS
DO 0 – 7 : DATA OUTPUTS
RCK : READ CLOCK INPUT
OE : READ ENABLE INPUT
RSTR : RESET READ INPUT
RSTW : RESET WRITE INPUT
WCK : WRITE CLOCK INPUT
WE : WRITE ENABLE INPUT

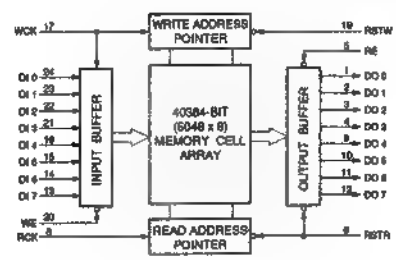

CXD2191R (SONY)
CXD2191R-T6 (SONY)

CLOCK/TIMING GENERATOR

-TOP VIEW-

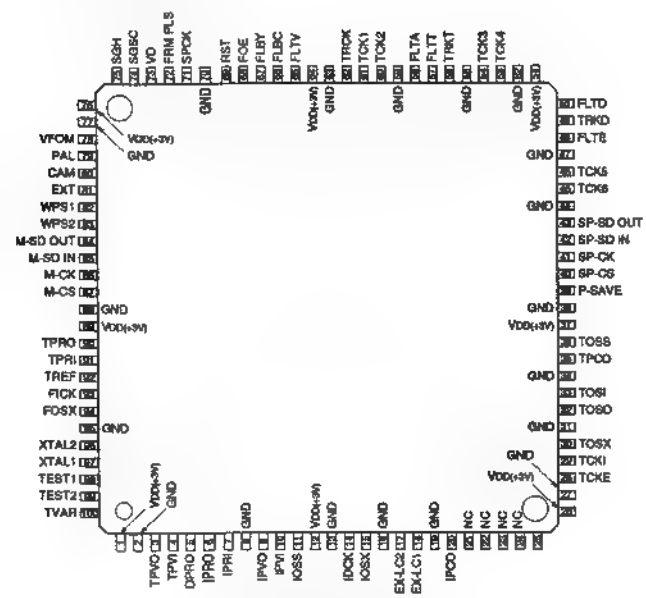

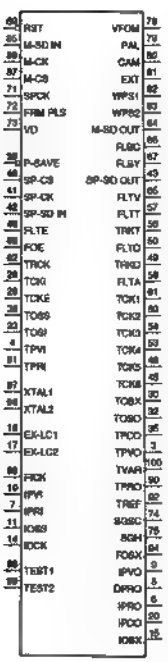

INPUT

EX-LC1	; EXTERNAL LC RESONATOR
FICK	; 13.5MHz OSCILLATOR
FLTE	; REFERENCE FRAME PULSE FOR THE INDI MODE
FOE	; REFERENCE FRAME PULSE FOR THE LINE & CAMERA MODE
FRM PLS	; FRAME PULSE FOR THE AFC
IDCK	; FRAME LOCKED 13.5MHz CLOCK
IOSS	; FRAME LOCKED 13.5MHz DIRECT OR 1/2 SELECT
IPRI	; PILOT REFERENCE
IPVI	; PILOT REFERENCE FEEDBACK
M-CK	; DATA TRANSFER CLOCK
M-CS	; CHIP SELECT
M-SD IN	; SERIAL DATA
P-SAVE	; POWER SAVE
RST	; RESET
SPCK	; HORIZONTAL LOCKED CLOCK (13.5kHz)
SP-CK	; DATA TRANSFER CLOCK
SP-CS	; CHIP SELECT
SP-SD IN	; SERIAL DATA
TCKE	; TRCK BUFFER FOR THE TCK5 & 6
TCKI	; TRCK BUFFER FOR THE TCK1 - 4
TOSI	; EXTERNAL LC RESONATOR
TOSS	; EXTARNAL LC RESONATOR DIRECT OR 1/2 SELECT
TPRI	; EXTERNAL PLL REFERENCE FOR THE TRCK PLL
TPVI	; TRCK PILOT FEEDBACK
TRCK	; TR CLOCK
VD	; VERTICAL PULSE FOR THE AFC
XTAL1	; 13.5MHz EXTERNAL CRYSTAL OSCILLATOR

OUTPUT

CAM	; STATUS (L = LINE, H = CAM)
DPRO	; DRUM REFERENCE PROTECTION
EX-LC2	; EXTERNAL LC RESONATOR
EXT	; STATUS (L = INT, H = EXT)
FLBC	; FRAME PULSE FOR THE BLK-C DATA IN PB MODE
FLBY	; FRAME PULSE FOR THE BLK-Y DATA IN PB MODE
FLTA	; FRAME PULSE FOR THE RECORDING AUDIO
FLTD	; FRAME PULSE FOR THE MECHANICAL & SPEED CONTROLLERS
FLTT	; FRAME PULSE FOR THE DESHUFFLE MEMORY
FLTV	; FRAME PULSE FOR THE BLK-MEMORY
FOSX	; EXTERNAL CRYSTAL OSCILLTOR BUFFERED OUTPUT
IPCO	; CHARGE PUMP OUTPUT FOR THE IDCK PLL
IOSX	; IDCK PLL OSCILLATOR
IPRO	; PILOT REFERENCE SIGNAL FOR THE IDCK PLL
IPVO	; PILOT FEEDBACK SIGNAL
M-SD OUT	; SERIAL DATA FOR THE MODE CONTROLLER
PAL	; STATUS (L = NTSC, H = PAL)
SGH	; JSG HORIZONTAL PULSE IN PLAYBACK MODE
SGSC	; JSG ODD/EVEN IN PLAYBACK MODE
SP-SD OUT	; SERIAL DATA FOR THE SPEED CONTROLLER
TCK1 - TCK6	; TRCK CLOCK BUFFERS
TOSO	; EXTERNAL LC RESONATOR FOR THE TRCK PLL
TOSX	; TRCK PLL OSCILLATOR
TPCO	; CHARGE PUMP FOR THE TRCK PLL
TPVO	; PILOT FEEDBACK SIGNAL FOR THE TRCK PLL
TPRO	; EXTERNAL PLL REFERENCE SIGNAL FOR THE TRCK PLL
TREF	; REFERENCE PULSE FOR THE FRAME PLL
TRKD	; TRACK PULSE FOR THE MECHANICAL & SPEED CONTROLLERS
TRKT	; TRACK PULSE FOR THE DESHUFFLE MEMORY
TVAR	; FRAME PLL FEEDBACK PULSE (FOR OPERATION CHECK)
VFOM	; STATUS
WPS1	; STATUS
WPS2	; STATUS
XTAL2	; 13.5MHz EXTERNAL CRYSTAL OSCILLATOR

M48Z58Y-70MH1TR (SGS THOMSON)

C-MOS 645(8K × 8)BIT STATIC RAM

– TOP VIEW–

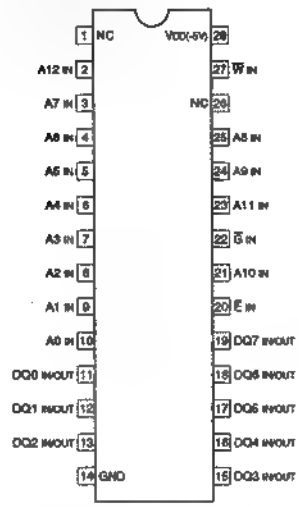

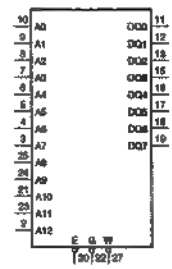

A0 - A12 ; ADDRESS INPUTS
DQ0 - DQ7 ; DATA INPUTS/OUTPUTS
E ; CHIP ENABLE
G ; OUTPUT ENABLE
W ; WRITE ENABLE

MODE	E	E	W	DQ0 - DQ7	POWER
DESELECT	1	×	×	HI-Z	STANDBY
WRITE	0	×	0	D IN	ACTIVE
READ	0	0	1	D OUT	ACTIVE
READ	0	1	1	HI-Z	ACTIVE
DESELECT	×	×	×	HI-Z	CMOS STANDBY
DESELECT	×	×	×	HI-Z	BATTERY BACK-UP MODE

1 ; HIGH LEVEL
0 ; LOW LEVEL
× ; DON'T CARE
HI-Z ; HIGH IMPEDANCE

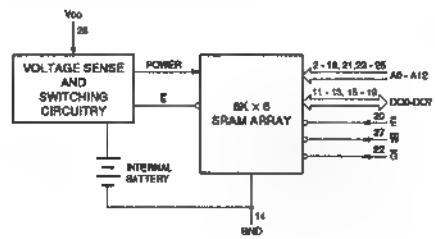

HD6437021C02X (HITACHI)

C-MOS 32-BIT MICROPROCESSOR

- TOP VIEW-

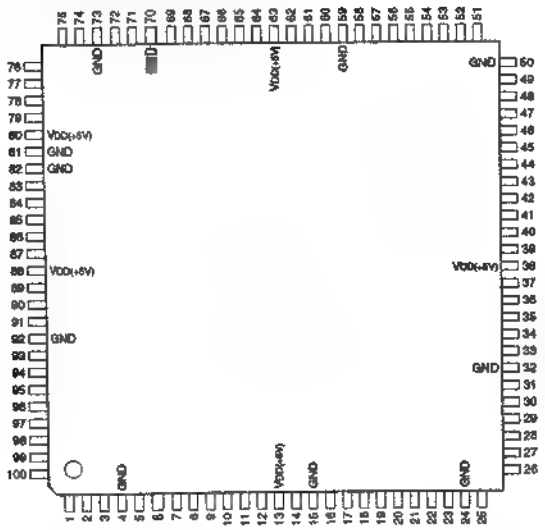

PIN NO.	I/O	SIGNAL	PIN NO.	I/O	SIGNAL	PIN NO.	I/O	SIGNAL
1	I/O	AD0	35	O	A13	69	O	CK
2	I/O	AD1	36	O	A14	70	—	GND
3	I/O	AD2	37	O	A15	71	I	EXTAL
4	—	GND	38	—	VDD	72	I	XTAL
5	I/O	AD3	39	O	A16	73	—	GND
6	I/O	AD4	40	O	A17	74	I	NMI
7	I/O	AD5	41	—	GND	75	O	WDTOVF
8	I/O	AD6	42	O	A18	76	I	RES
9	I/O	AD7	43	O	A19	77	I	MD0
10	I/O	AD8	44	O	A20	78	I	MD1
11	I/O	AD9	45	O	A21	79	I	MD2
12	I/O	AD10	46	O	CS5	80	—	VDD
13	—	VDD	47	O	CS1/CASH	81	—	GND
14	I/O	AD11	48	O	CS2	82	—	GND
15	—	GND	49	■	CS3/CASL	83	I/O	PB0/TP0/TIOCA2
16	I/O	AD12	50	—	GND	84	I/O	PB1/TP1/TIOCB2
17	I/O	AD13	■	I/O	PA0/CS4/TIOCA0	85	I/O	PB2/TP2/TIOCA3
18	I/O	AD14	52	I/O	PA1/CS5/RA5	86	I/O	PB3/TP3/TIOCB3
19	I/O	AD15	53	I/O	PA2/CS6/TIOCB0	87	I/O	PB4/TP4/TIOCA4
20	■	A0 (HBS)	54	I/O	PA3/CS7/WAIT	■	—	VDD
21	O	A1	55	I/O	PA4/WRL/(WR)	■	I/O	PB5/TP5/TIOCB4
22	O	A2	56	I/O	PA5/WRH/(LBS)	90	I/O	PB6/TP6/TOCXA4/TCLKC
23	O	A3	57	I/O	PA6/RD	91	I/O	PB7/TP7/TOCXB4/TCLKD
24	—	GND	58	I/O	PA7/BACK	92	—	GND
25	O	A4	59	—	GND	■	I/O	PB8/TP8/RXD0
26	O	A5	60	I/O	PA8/BREQ	94	I/O	PB9/TP9/TXD0
27	O	A6	61	I/O	PA9/AH/IRQOUT	95	I/O	PB10/TP10/RXD1
■	O	A7	62	I/O	PA10/DPL/TIOCA1	96	■	PB11/TP11/TXD1
29	O	A8	63	—	VDD	97	I/O	PB12/TP12/IRQ4/SCK0
30	O	A9	64	I/O	PA11/DPH/TIOCB1	98	I/O	PB13/TP13/IRQ5/SCK1
31	O	A10	65	I/O	PA12/IRQ0/DACK0/TCLKA	99	I/O	PB14/TP14/IRQ6
32	—	GND	66	I/O	PA13/IRQ1/DREQ0/TCLKB	100	I/O	PB15/TP15/IRQ7
33	O	A11	67	I/O	PA14/IRQ2/DACK1			
34	O	A12	68	I/O	PA15/IRQ3/DREQ1			

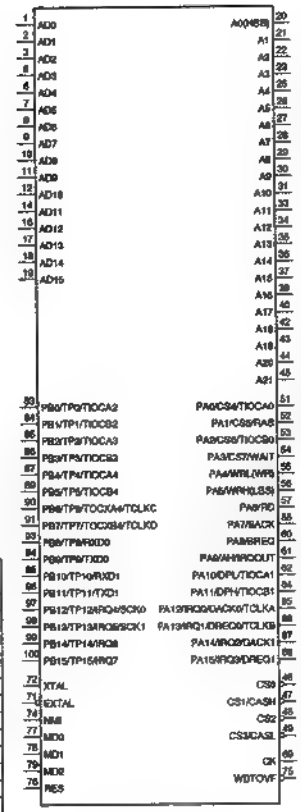

INPUT

BREQ	; BUS REQUEST
DREQ0, DREQ1	; DMA REQUEST
EXTAL	; CRYSTAL OSCILLATOR AND EXTERNAL CLOCK
IRQ0 - IRQ7	; INTERRUPT REQUEST
MD0 - MD2	; MODE SELECT
NMI	; NON-MASKABLE INTERRUPT
RES	; RESET
RXD0, RXD1	; RECEIVE DATA
TCLKA - TCLKD	; TIMER CLOCK
WAIT	; WAIT
XTAL	; EXTERNAL CRYSTAL OSCILLATOR

OUTPUT

AH	; ADDRESS HOLD
A0 - A21	; ADDRESS BUS
BACK	; BUS REQUEST ACKNOWLEDGE
CASH	; HIGH COLUMN ADDRESS STROBE
CASL	; LOW COLUMN ADDRESS STROBE
CK	; SYSTEM CLOCK
CS0 - CS7	; CHIP SELECT
DACK0, DACK1	; DMA REQUEST ACKNOWLEDGE
HBS	; HIGH BYTE STROBE
LBS	; LOW BYTE STROBE
RAS	; ROW ADDRESS STROBE
RD	; READ
RQOUT	; REQUEST OUTPUT
TOCXA4	; OUTPUT COMPARE XA4
TOCXB4	; OUTPUT COMPARE XB4
TP0 - TP15	; TIMING PATTERN CONTROLLER
TXD0, TXD1	; TRANSMIT DATA
WDTOVF	; WATCH-DOG TIMER OVERFLOW
WR	; WRITE
WRH	; HIGH WRITE
WRL	; LOW WRITE

INPUT/OUTPUT

AD0 - AD15	; DATA/ADDRESS BUS
DPH	; HIGH DATA PARITY
DPL	; LOW DATA PARITY
PA0 - PA15	; I/O PORT A
PB0 - PB15	; I/O PORT B
SCK0, SCK1	; SERIAL CLOCK
TIOCA0 - TIOCA4	; ITU INPUT CAPTURE/OUTPUT COMPARE
TIOB0 - TIOCB4	; ITU INPUT CAPTURE/OUTPUT COMPARE

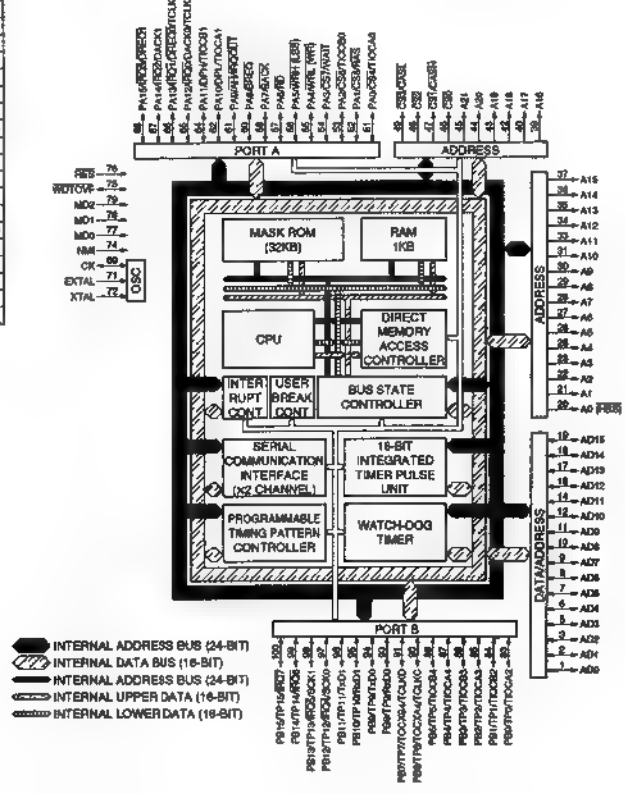

SECTION 5
SPARE PARTS AND OPTIONAL FIXTURES

5-1. NOTES ON SPARE PARTS

(1) Safety Related ComponentsWarning

Components identified by shading marked with ⚠ on the schematic diagrams, exploded views and electrical spare parts list arecritical to safe operation. Replace these components with Sony parts whose parts numbers appear as shown in thismanual or in service manual supplements published by Sony.

(2) Standardization of Parts

Replace Parts that are supplied from Sony Parts Center can sometimes have different shape and external appearance than what are actually used in equipment. This is due to "accommodating the improved parts and/ or engineering changes" or "standardization of genuine parts."

(3) Stocked of Parts

The parts marked with "S" in the SP column of the exploded views and electrical spare parts list are normally required for routine service work. Orders for parts marked with "O" will be proceed, but allow for additional delivery time.

(4) Units of Capacitors, Inductors, and Resistors

The following units are omitted in the schematic diagrams exploded views, and electrical part lists unless otherwise specified;

Capacitor : μF
Inductor : μH
Resistor : W

5-1. 補修用部品注意事項

(1) 安全重要部品

回路図、分解図、電気部品表中、⚠印の部品は安全性を維持するために重要な部品です。従って、これらの部品を交換するには必ず指定の部品と交換して下さい。

(2) 部品の共通化

ソニーから供給される部品はセットに実装されているものと異なることがあります。これは部品の共通化、改良等によるものです。分解図や電気部品表中には現時点での共通化された部品が記載されています。

(3) 部品在庫

SP (Supply code) 欄が"O"で示されている部品は交換頻度が低い部品であるので在庫しないことがあり、納期が長くなることがあります。

(4) コンデンサ、インダクタ、抵抗の単位

回路図、分解図、電気部品表中、特に明記したものを除き、下記の単位は省略されています。

コンデンサ : μF
インダクタ : μH
抵抗 : W

5-2. EXPLODED VIEWS

FRONT PANEL AND CD-ROM FLOPPY DISK

No.	Parts No.	SP	Description
1	A-8031-047-A	s	PANEL, FRONT
2	A-8273-932-A	o	MOUNTED CIRCUIT BOARD, FP-74
3	A-8311-902-A	s	HDD (1.0 GB)
4	X-3678-589-1	o	PANEL ASSY, FRONT
5	X-4852-903-0	s	LEG ASSY
6	X-4946-946-1	s	PANEL (3) ASSY,FRONT
7	1-241-577-11	s	RES, VAR
8	1-504-933-11	s	SPEAKER (4×2.8 cm)
9	1-565-327-11	s	JACK, LARGE TYPE 1P
10	⚠1-570-384-21	s	SWITCH, SEESAW (AC POWER)
11	1-661-125-11	o	PRINTED CIRCUIT BOARD, LE-154
12	2-269-962-00	o	COVER SWITCH
13	3-603-361-02	o	LID, UPPER
14	3-603-454-01	o	OUTER L
15	3-603-455-01	o	OUTER R
16	3-603-481-02	o	KNOB, HP VOL
17	3-688-814-31	s	CAP, SWITCH
18	4-313-702-91	s	HANDLE
19	4-612-633-01	s	SCREW, HD FITTING
20	4-628-474-41	s	BUTTON, EJECT
21	4-968-390-91	s	BUTTON, EJECT
22	4-976-566-41	s	PLATE, ORNAMENTAL (3), TRAY

FRONT PANEL AND CD-ROM FLOPPY DISK

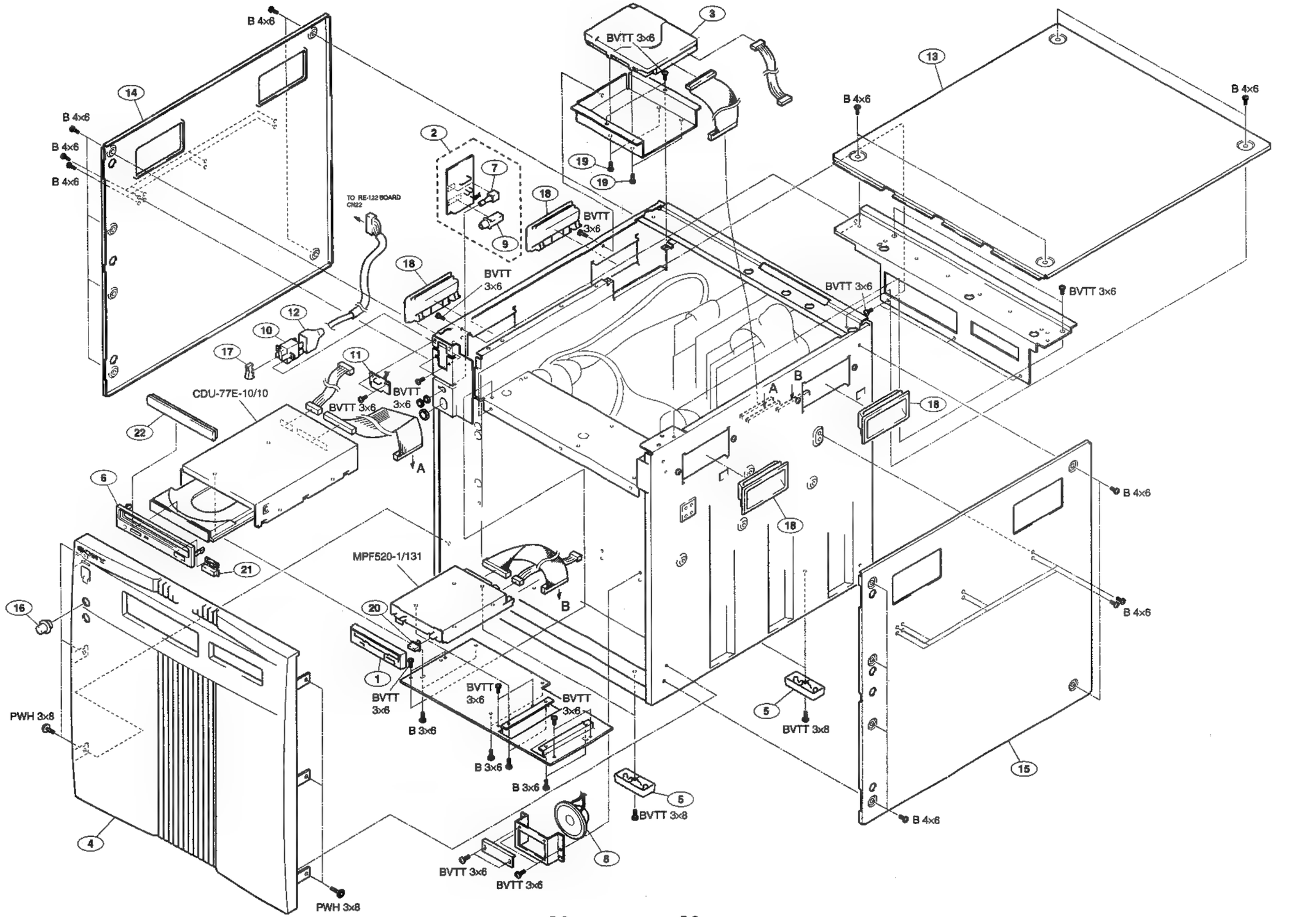

PC ASSY

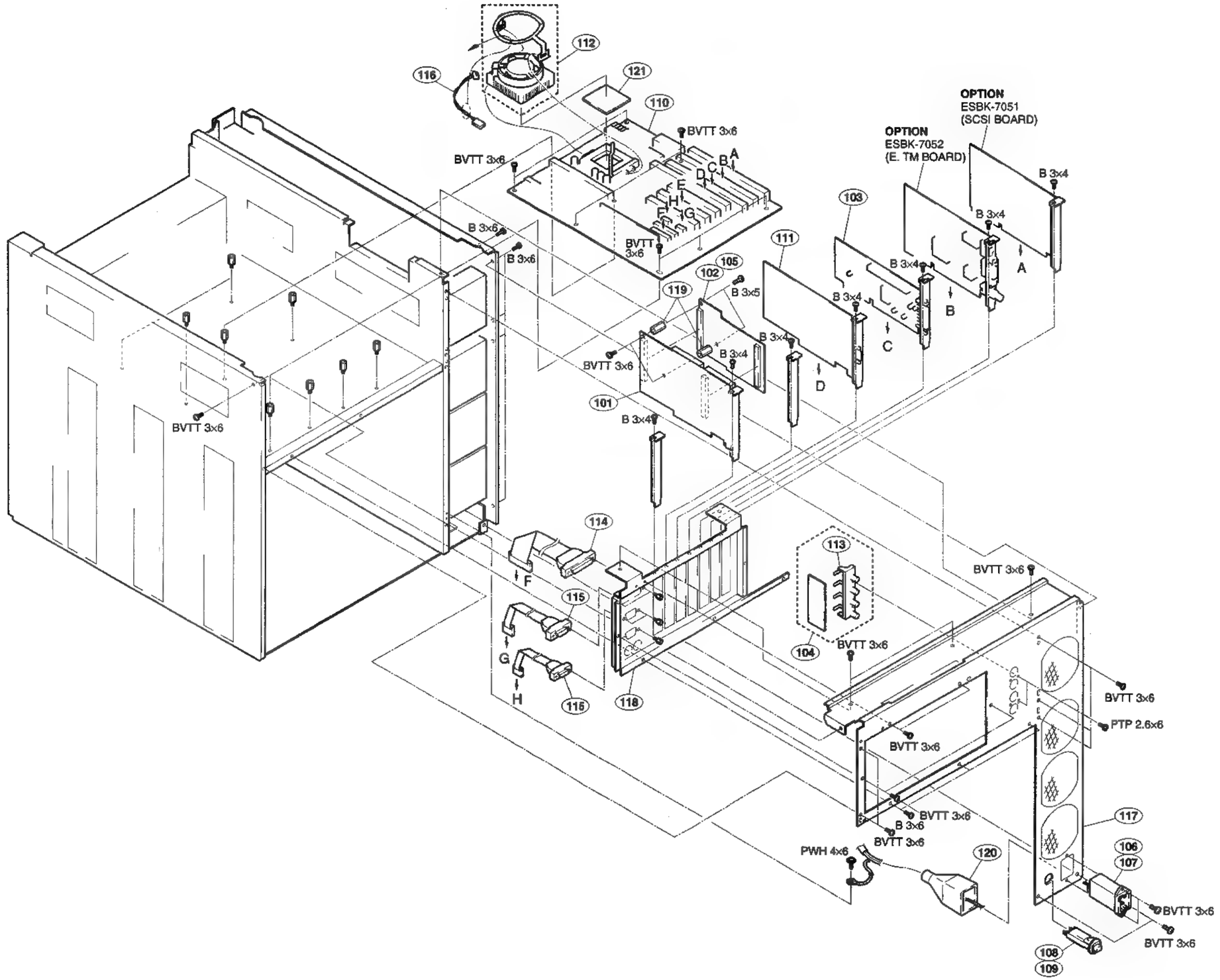
112
116
121
110
BVTT 3x6
BVTT 3x6
B 3x6
B 3x6
BVTT 3x6
A
B
C
D
E
F
G
H
OPTION
ESBK-7051
(SCSI BOARD)
OPTION
ESBK-7052
(E. TM BOARD)
B 3x4
B 3x4
B 3x4
B 3x4
B 3x4
B 3x4
103
111
105
102
B 3x5
119
BVTT 3x6
101
B 3x4
BVTT 3x6
114
F
115
G
H
116
118
113
104
BVTT 3x6
BVTT 3x6
BVTT 3x6
PTP 2.6x6
BVTT 3x6
BVTT 3x6
B 3x6
BVTT 3x6
PWH 4x6
120
117
106
107
BVTT 3x6
BVTT 3x6
108
109

PC ASSY

No.	Parts No.	SP	Description
101	A-8273-914-A	o	MOUNTED CIRCUIT BOARD, VPR-18
102	A-8273-915-A	o	MOUNTED CIRCUIT BOARD, DSC-75 (For J,UC)
103	A-8273-916-A	o	MOUNTED CIRCUIT BOARD, BF-54
104	A-8273-937-A	o	MOUNTED CIRCUIT BOARD, CN-1242
105	A-8273-944-A	o	MOUNTED CIRCUIT BOARD, DSC-75A (For CE)
106	⚠1-251-506-11	s	INLET (WITH FILTER) (For J, UC)
107	⚠1-251-507-11	s	INLET (WITH FILTER) (For CE)
108	⚠1-533-570-11	s	BREAKER, CIRCUIT (For J, UC)
109	⚠1-533-630-11	s	BREAKER, CIRCUIT (For CE)
110	1-589-861-11	o	BOARD, PC, MAIN
111	1-589-888-11	o	BOARD,VGA
112	1-698-827-11	s	FAN, D. C. (WITH HEAT SINK)
113	1-774-966-11	o	CONNECTOR, BNC (RECEPTACLE)
114	1-777-296-11	o	CABLE (WITH CONNECTOR) (25P)
115	1-777-297-11	o	CABLE (WITH CONNECTOR) (9P)
116	1-956-406-11	o	HARNESS, SUB (FAN)
117	3-603-451-01	o	PANEL, REAR
118	3-603-463-01	o	PLATE (2), PC CN
119	3-718-661-01	o	SUPPORT, TC
120	4-601-466-11	s	COVER, 3P INLET
121	8-759-379-37	s	IC A80502-6100

POWER SUPPLY

No.	Parts No.	SP	Description
201	A-8273-931-A	o	MOUNTED CIRCUIT BOARD, MB-639
202	A-8273-938-A	o	MOUNTED CIRCUIT BOARD, RE-122 (For J, UC)
203	A-8311-628-A	o	MOUNTED CIRCUIT BOARD, RE-122A (For CE)
204	1-698-779-11	s	FAN, DC
205	1-956-148-11	o	HARNESS, SUB (VPR 1)
206	1-956-149-11	o	HARNESS, SUB (VPR 2)
207	1-956-150-11	o	HARNESS, SUB (BF)
208	1-956-151-11	o	HARNESS, SUB (FP)
209	3-178-164-01	o	RAIL (290), PC BOARD GUIDE

POWER SUPPLY

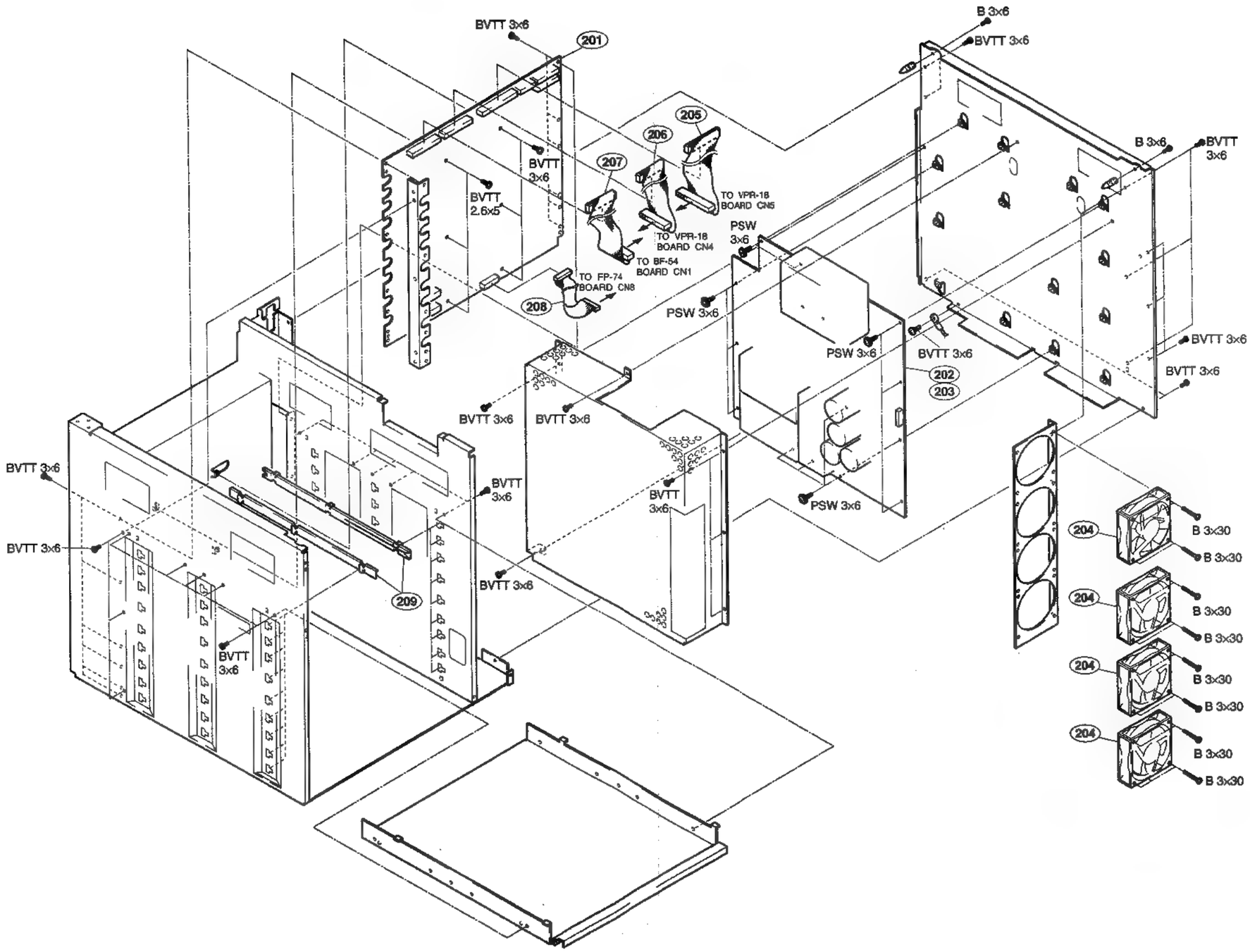

CARD BOARD (1/3)

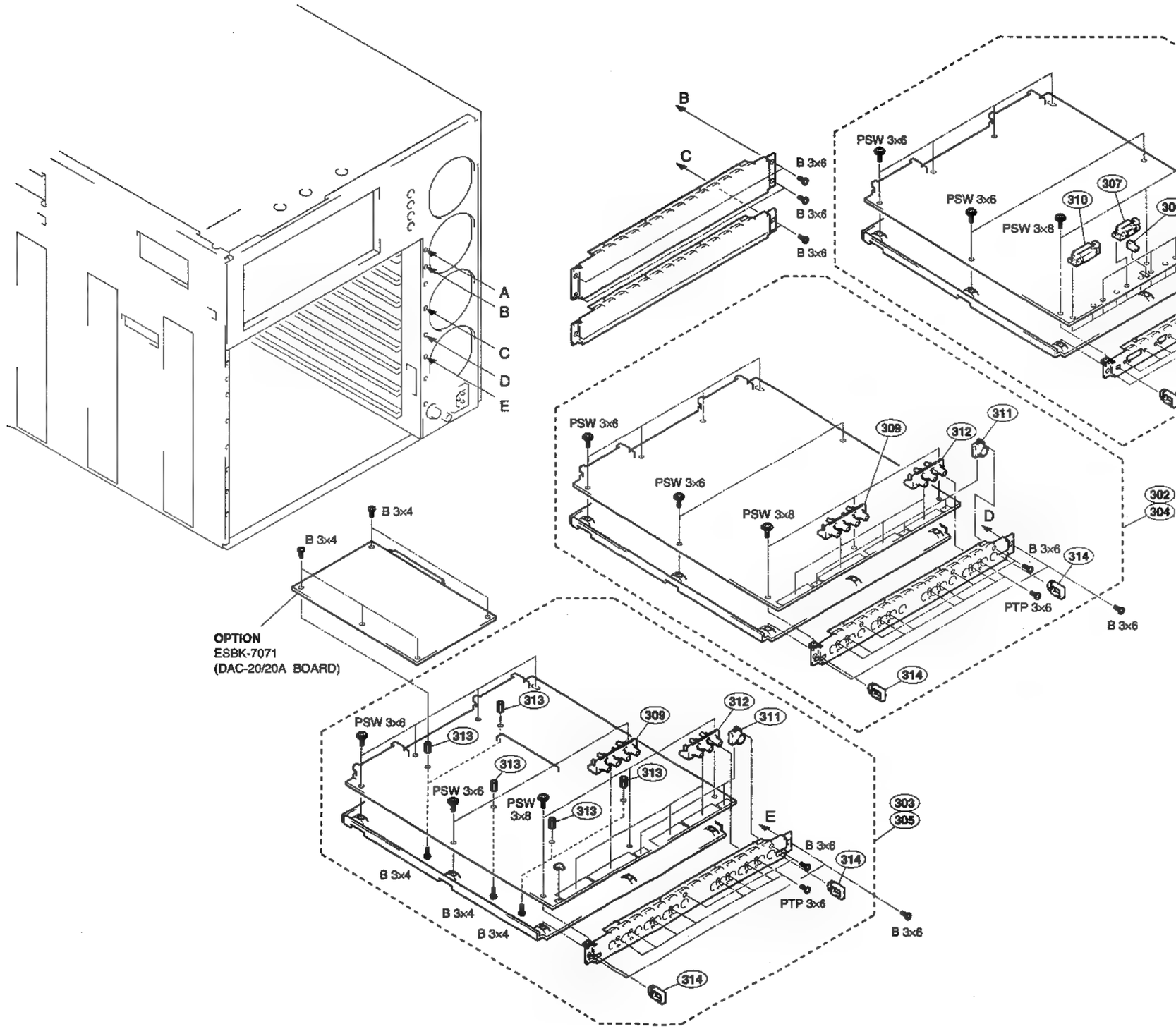

CARD BOARD (1/3)

No.	Parts No.	SP	Description
301	A-8273-909-A	o	MOUNTED CIRCUIT BOARD, SY-219
302	A-8273-935-A	o	MOUNTED CIRCUIT BOARD, AD-115 (For J, UC)
303	A-8273-936-A	o	MOUNTED CIRCUIT BOARD, DA-95 (For J, UC)
304	A-8273-952-A	o	MOUNTED CIRCUIT BOARD, AD-115A (For CE)
305	A-8273-953-A	o	MOUNTED CIRCUIT BOARD, DA-95A (For CE)
306	1-554-088-00	s	SWITCH, KEY BOARD
307	1-568-426-11	s	CONNECTOR, D-SUB 9P
308	1-573-566-11	s	CONNECTOR, D-SUB (ANGLE TYPE) 9P
309	1-744-966-11	o	CONNECTOR, BNC (RECEPTACLE)
310	1-750-889-11	s	CONNECTOR, D-SUB (ANGLE TYPE) 15P
311	1-766-239-11	o	CONNECTOR, S TERMINAL 4P
312	1-774-965-11	o	CONNECTOR, BNC (RECEPTACLE)
313	3-146-822-21	o	SPACER
314	3-172-089-01	o	HANDLE

CARD BOARD (2/3)

No.	Parts No.	SP	Description
401	A-8273-882-A	o	MOUNTED CIRCUIT BOARD, FM-44 (For J, UC)
402	A-8273-884-A	o	MOUNTED CIRCUIT BOARD, MY-75
403	A-8273-888-A	o	MOUNTED CIRCUIT BOARD, FM-44A (For CE)
404	A-8273-891-A	o	MOUNTED CIRCUIT BOARD, FM-43 (For J, UC)
405	A-8273-893-A	o	MOUNTED CIRCUIT BOARD, MY-74
406	A-8273-897-A	o	MOUNTED CIRCUIT BOARD, FM-43A (For CE)
407	A-8273-905-A	o	MOUNTED CIRCUIT BOARD, AU-217
408	A-8273-907-A	o	MOUNTED CIRCUIT BOARD, CN-1237 (For UC, CE)
409	A-8273-939-A	o	MOUNTED CIRCUIT BOARD, CN-1237 (For J)
410	1-661-349-11	o	PRINTED CIRCUIT BOARD, CN-1238
411	1-750-785-21	s	CONNECTOR (XLR TYPE) 3P
412	1-750-786-21	s	CONNECTOR (XLR TYPE) 3P
413	1-778-745-11	s	JACK, PIN 2P
414	1-956-152-11	o	HARNESS, SUB (AU-01)
415	1-956-153-11	o	HARNESS, SUB (AU-02)
416	1-956-154-11	o	HARNESS, SUB (AU-03)
417	2-280-622-01	o	SUPPORT (M3), HEXAGON 5.0 mm (For PU-84A)
418	3-172-089-01	o	HANDLE
419	3-603-484-01	o	HANDLE, PCB
420	3-718-661-01	o	SUPPORT, TC 9.0 mm (For EV-33)

CARD BOARD (2/3)

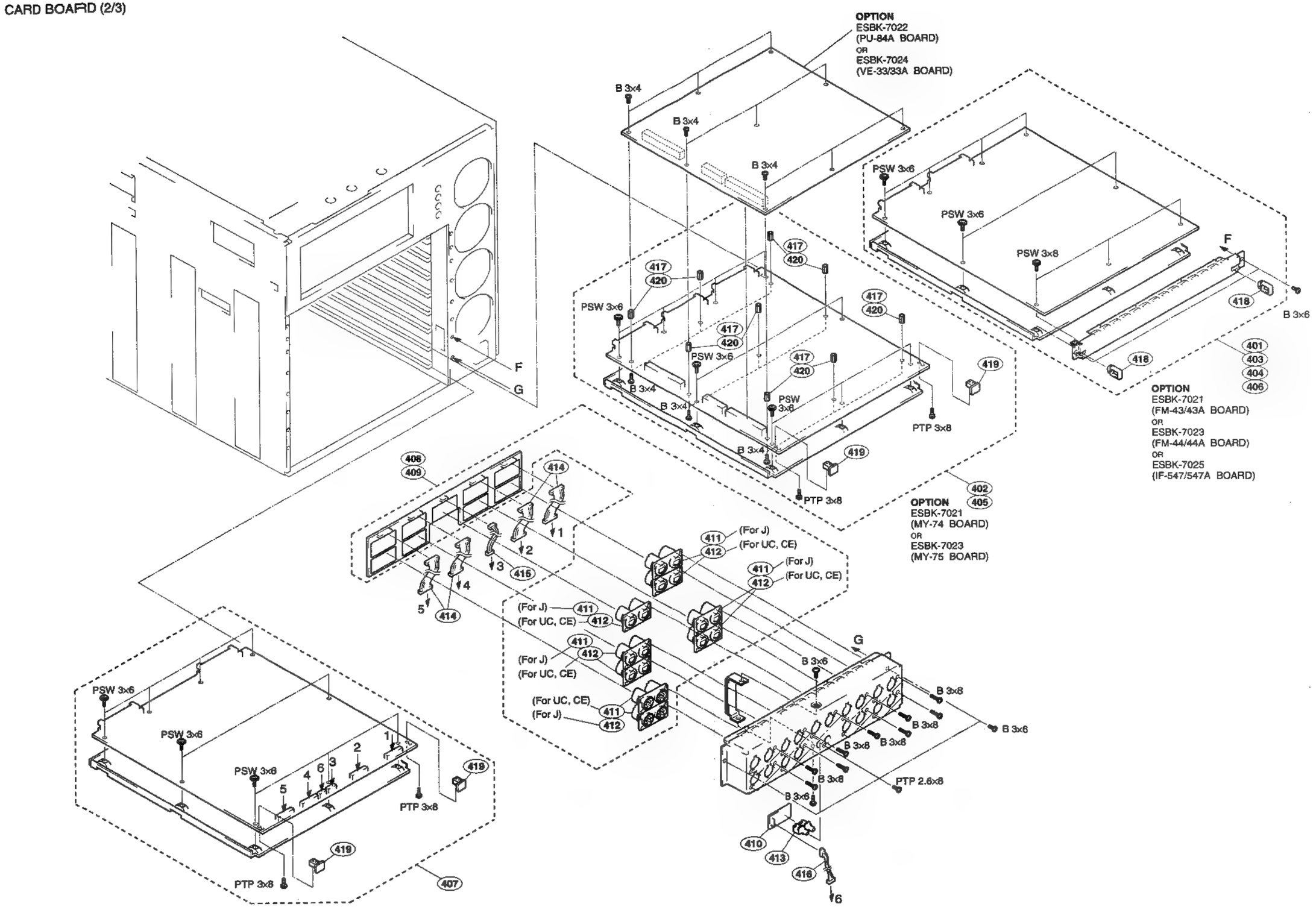

CARD BOARD (3/3)

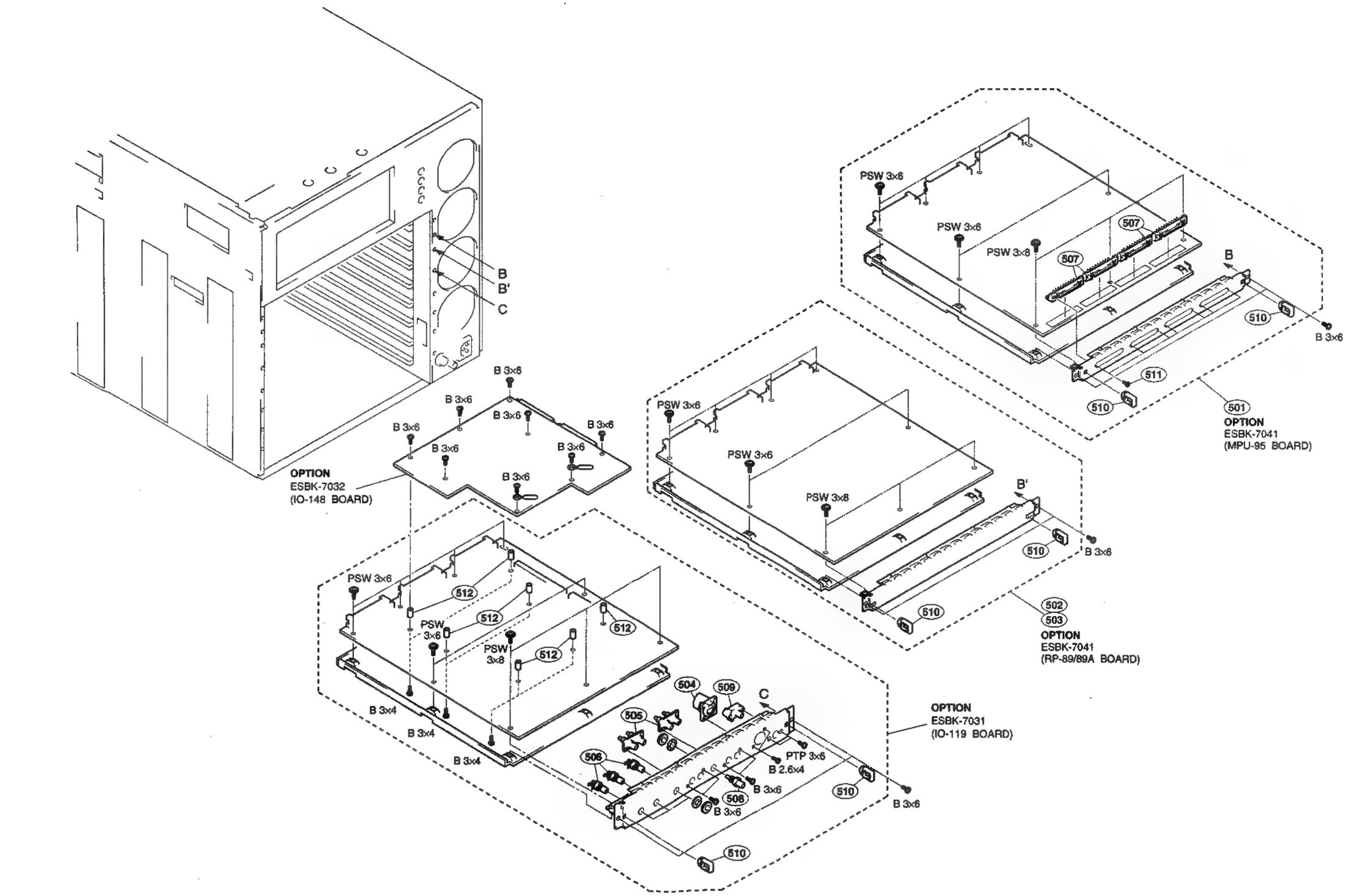

CARD BOARD (3/3)

No.	Parts No.	SP	Description
501	A-8311-015-A	o	MOUNTED CIRCUIT BOARD, MPU-95
502	A-8311-017-A	o	MOUNTED CIRCUIT BOARD, RP-89 (For J, UC)
503	A-8311-019-A	o	MOUNTED CIRCUIT BOARD, RP-89A (For CE)
504	1-568-006-11	s	CONNECTOR, XLR TYPE 3P
505	1-750-881-11	s	CONVERER, COAXIAL CONNECTOR
506	1-764-273-11	s	CONNECTOR, COAXIAL (BNC TYPE)
507	1-770-231-11	o	PIN, CONNECTOR (HALF PITCH) 50P
508	1-774-157-11	s	CONVERER, COAXIAL CONNECTOR
509	1-778-677-11	s	JACK, PIN (1P)
510	3-172-089-01	o	HANDLE
511	3-696-947-11	s	SCREW (B 2.5)
512	3-711-649-01	s	STUD

5-3. ELECTRICAL PARTS LIST

AD-115 BOARD(ES-7(UC/J))

Ref. No. or Q'ty	Part No.	SP	Description
1pc	A-8273-935-A	■	MOUNTED CIRCUIT BOARD, AD-115
1pc	3-172-089-01	o	HANDLE
1pc	7-621-770-87	s	SCREW +B 2.6x5
1pc	7-682-546-04	s	SCREW +B 3x5
1pc	7-682-947-01	■	SCREW +PSW 3x6
1pc	7-682-948-01	s	SCREW +PSW 3x8
1pc	7-685-145-11	s	SCREW +P 3x6 TYPE2 NON-SLIT
C100	1-128-551-11	s	ELECT 22uF 20% 63V
C101	1-163-235-11	■	CERAMIC, CHIP 22pF 5% 50V
C102	1-126-933-11	s	ELECT 100uF 20% 16V
C103	1-126-933-11	s	ELECT 100uF 20% 16V
C104-107	1-163-037-11	s	CERAMIC, CHIP 0.022uF 10% 25V
C108	1-163-038-91	s	CERAMIC, CHIP 0.1uF 25V
C109	1-126-967-11	■	ELECT 47uF 20% 50V
C110	1-126-967-11	s	ELECT 47uF 20% 50V
C111	1-163-038-91	■	CERAMIC, CHIP 0.1uF 25V
C112	1-124-903-11	s	ELECT 1uF 20% 50V
C113	1-163-275-11	■	CERAMIC, CHIP 0.001uF 5% 50V
C114	1-163-038-91	■	CERAMIC, CHIP 0.1uF 25V
C115	1-128-551-11	s	ELECT 22uF 20% 63V
C116	1-163-275-11	s	CERAMIC, CHIP 0.001uF 5% 50V
C117	1-128-551-11	s	ELECT 22uF 20% 63V
C118	1-128-551-11	s	ELECT 22uF 20% 63V
C119	1-163-038-91	s	CERAMIC, CHIP 0.1uF 25V
C120-125	1-126-967-11	s	ELECT 47uF 20% 50V
C126	1-128-551-11	s	ELECT 22uF 20% 63V
C127	1-128-551-11	s	ELECT 22uF 20% 63V
C128	1-128-551-11	■	ELECT 22uF 20% 63V
C129	1-126-964-11	s	ELECT 10uF 20% 50V
C130	1-163-231-11	s	CERAMIC, CHIP 15pF 5% 50V
C131	1-163-037-11	s	CERAMIC, CHIP 0.022uF 10% 25V
C132	1-163-120-00	s	CERAMIC, CHIP 130pF 5% 50V
C133	1-163-037-11	s	CERAMIC, CHIP 0.022uF 10% 25V
C134	1-126-933-11	s	ELECT 100uF 20% 16V
C135	1-163-037-11	s	CERAMIC, CHIP 0.022uF 10% 25V
C136	1-163-038-91	s	CERAMIC, CHIP 0.1uF 25V
C137	1-126-967-11	s	ELECT 47uF 20% 50V
C138	1-126-967-11	s	ELECT 47uF 20% 50V
C139	1-126-967-11	s	ELECT 47uF 20% 50V
C140	1-163-037-11	s	CERAMIC, CHIP 0.022uF 10% 25V
C141	1-126-967-11	s	ELECT 47uF 20% 50V
C142	1-126-967-11	s	ELECT 47uF 20% 50V
C143	1-126-967-11	s	ELECT 47uF 20% 50V
C144	1-126-925-11	s	ELECT 470uF 20% 10V
C145	1-131-347-00	s	TANTALUM 1uF 10% 35V
C146	1-163-037-11	■	CERAMIC, CHIP 0.022uF 10% 25V
C147	1-126-933-11	s	ELECT 100uF 20% 16V
C148	1-126-933-11	s	ELECT 100uF 20% 16V
C149	1-163-037-11	s	CERAMIC, CHIP 0.022uF 10% 25V
C150	1-126-933-11	s	ELECT 100uF 20% 16V
C151	1-163-037-11	s	CERAMIC, CHIP 0.022uF 10% 25V
C152	1-126-967-11	s	ELECT 47uF 20% 50V
C153	1-126-967-11	s	ELECT 47uF 20% 50V
C154	1-163-037-11	s	CERAMIC, CHIP 0.022uF 10% 25V
C155	1-163-037-11	s	CERAMIC, CHIP 0.022uF 10% 25V
C156	1-163-037-11	s	CERAMIC, CHIP 0.022uF 10% 25V
C157	1-126-933-11	■	ELECT 100uF 20% 16V
C158	1-126-933-11	s	ELECT 100uF 20% 16V

(AD-115 BOARD(ES-7(UC/J)))

Ref. No. or Q'ty	Part No.	SP	Description
C159	1-163-038-91	s	CERAMIC, CHIP 0.1uF 25V
C160	1-163-038-91	■	CERAMIC, CHIP 0.1uF 25V
C161	1-128-551-11	s	ELECT 22uF 20% 63V
C162	1-128-551-11	■	ELECT 22uF 20% 63V
C163	1-128-551-11	s	ELECT 22uF 20% 63V
C164	1-163-037-11	s	CERAMIC, CHIP 0.022uF 10% 25V
C165	1-128-551-11	s	ELECT 22uF 20% 63V
C166	1-128-551-11	s	ELECT 22uF 20% 63V
C167	1-128-551-11	s	ELECT 22uF 20% 63V
C168	1-126-933-11	■	ELECT 100uF 20% 16V
C169	1-126-933-11	s	ELECT 100uF 20% 16V
C170	1-126-933-11	s	ELECT 100uF 20% 16V
C171	1-163-251-11	s	CERAMIC, CHIP 100pF 5% 50V
C172	1-163-037-11	s	CERAMIC, CHIP 0.022uF 10% 25V
C173	1-128-551-11	■	ELECT 22uF 20% 63V
C174	1-128-551-11	s	ELECT 22uF 20% 63V
C175	1-163-037-11	s	CERAMIC, CHIP 0.022uF 10% 25V
C176	1-163-037-11	s	CERAMIC, CHIP 0.022uF 10% 25V
C177	1-163-037-11	s	CERAMIC, CHIP 0.022uF 10% 25V
C178	1-126-933-11	s	ELECT 100uF 20% 16V
C179	1-126-933-11	s	ELECT 100uF 20% 16V
C180	1-163-038-91	■	CERAMIC, CHIP 0.1uF 25V
C181	1-163-038-91	s	CERAMIC, CHIP 0.1uF 25V
C182	1-128-551-11	■	ELECT 22uF 20% 63V
C183	1-128-551-11	s	ELECT 22uF 20% 63V
C184	1-128-551-11	■	ELECT 22uF 20% 63V
C185	1-163-037-11	s	CERAMIC, CHIP 0.022uF 10% 25V
C186	1-128-551-11	s	ELECT 22uF 20% 63V
C187	1-128-551-11	■	ELECT 22uF 20% 63V
C188	1-128-551-11	s	ELECT 22uF 20% 63V
C189	1-126-933-11	s	ELECT 100uF 20% 16V
C190	1-126-933-11	s	ELECT 100uF 20% 16V
C191	1-126-933-11	■	ELECT 100uF 20% 16V
C192	1-163-251-11	s	CERAMIC, CHIP 100pF ■ 50V
C193	1-163-037-11	■	CERAMIC, CHIP 0.022uF 10% 25V
C194	1-128-551-11	s	ELECT 22uF 20% 63V
C195	1-128-551-11	s	ELECT 22uF 20% 63V
C196	1-163-037-11	■	CERAMIC, CHIP 0.022uF 10% 25V
C197	1-163-037-11	s	CERAMIC, CHIP 0.022uF 10% 25V
C198	1-163-037-11	s	CERAMIC, CHIP 0.022uF 10% 25V
C199	1-126-933-11	■	ELECT 100uF 20% 16V
C200	1-126-933-11	■	ELECT 100uF 20% 16V
C201	1-163-038-91	s	CERAMIC, CHIP 0.1uF 25V
C202	1-163-038-91	s	CERAMIC, CHIP 0.1uF 25V
C203	1-126-933-11	s	ELECT 100uF 20% 16V
C204	1-126-933-11	s	ELECT 100uF 20% 16V
C205	1-163-037-11	s	CERAMIC, CHIP 0.022uF 10% 25V
C206	1-163-229-11	s	CERAMIC, CHIP 12pF 5% 50V
C207	1-163-231-11	s	CERAMIC, CHIP 15pF ■ 50V
C208	1-163-087-00	■	CERAMIC, CHIP 4pF 50V
C209	1-163-038-91	s	CERAMIC, CHIP 0.1uF 25V
C210	1-163-037-11	s	CERAMIC, CHIP 0.022uF 10% 25V
C211	1-163-231-11	s	CERAMIC, CHIP 15pF 5% 50V
C212	1-126-964-11	■	ELECT 10uF 20% 50V
C213	1-163-038-91	■	CERAMIC, CHIP 0.1uF 25V
C214	1-164-232-11	■	CERAMIC, CHIP 0.01uF 10% 100V
C215	1-126-933-11	■	ELECT 100uF 20% 16V
C216	1-163-038-91	■	CERAMIC, CHIP 0.1uF 25V
C217	1-164-232-11	■	CERAMIC, CHIP 0.01uF 10% 100V

(AD-115 BOARD(ES-7(UC/J)))

Ref. No. or Q'ty	Part No.	SP	Description
C218	1-163-038-91	s	CERAMIC, CHIP 0.1uF 25V
C219	1-126-933-11	s	ELECT 100uF 20% 16V
C220	1-163-038-91	s	CERAMIC, CHIP 0.1uF 25V
C221	1-163-133-00	s	CERAMIC, CHIP 470pF 5% 50V
C222	1-163-038-91	■	CERAMIC, CHIP 0.1uF 25V
C223	1-126-964-11	s	ELECT 10uF 20% 50V
C224	1-163-038-91	s	CERAMIC, CHIP 0.1uF 25V
C225	1-126-933-11	s	ELECT 100uF 20% 16V
C226	1-126-933-11	s	ELECT 100uF 20% 16V
C227-237	1-163-038-91	■	CERAMIC, CHIP 0.1uF 25V
C238	1-126-967-11	s	ELECT 47uF 20% 50V
C239	1-128-551-11	s	ELECT 22uF 20% 63V
C240	1-128-551-11	s	ELECT 22uF 20% 63V
C241	1-126-967-11	s	ELECT 47uF 20% 50V
C242	1-163-038-91	s	CERAMIC, CHIP 0.1uF 25V
C243	1-163-037-11	s	CERAMIC, CHIP 0.022uF 10% 25V
C244	1-126-933-11	■	ELECT 100uF 20% 16V
C245	1-163-038-91	s	CERAMIC, CHIP 0.1uF 25V
C246	1-126-933-11	s	ELECT 100uF 20% 16V
C247	1-163-037-11	s	CERAMIC, CHIP 0.022uF 10% 25V
C248	1-163-037-11	s	CERAMIC, CHIP 0.022uF 10% 25V
C249	1-163-227-11	s	CERAMIC, CHIP 10pF 5% 50V
C250	1-163-121-00	s	CERAMIC, CHIP 150pF 5% 50V
C251	1-126-924-11	■	ELECT 330uF 20% 10V
C252	1-163-235-11	s	CERAMIC, CHIP 22pF 5% 50V
C253	1-163-038-91	s	CERAMIC, CHIP 0.1uF 25V
C254	1-163-087-00	■	CERAMIC, CHIP 4pF 50V
C255	1-163-227-11	s	CERAMIC, CHIP 10pF 5% 50V
C256	1-163-235-11	s	CERAMIC, CHIP 22pF 5% 50V
C257	1-163-038-91	s	CERAMIC, CHIP 0.1uF 25V
C258	1-163-235-11	s	CERAMIC, CHIP 22pF 5% 50V
C259	1-126-933-11	s	ELECT 100uF 20% 16V
C260	1-163-037-11	s	CERAMIC, CHIP 0.022uF 10% 25V
C261	1-126-933-11	s	ELECT 100uF 20% 16V
C262	1-126-933-11	s	ELECT 100uF 20% 16V
C263	1-163-038-91	s	CERAMIC, CHIP 0.1uF 25V
C264	1-163-038-91	■	CERAMIC, CHIP 0.1uF 25V
C265	1-163-038-91	■	CERAMIC, CHIP 0.1uF 25V
C266	1-126-933-11	s	ELECT 100uF 20% 16V
C267	1-126-933-11	s	ELECT 100uF 20% 16V
C268	1-163-239-11	s	CERAMIC, CHIP 33pF 5% 50V
C269	1-163-231-11	s	CERAMIC, CHIP 15pF 5% 50V
C270	1-163-038-91	s	CERAMIC, CHIP 0.1uF 25V
C271	1-163-251-11	s	CERAMIC, CHIP 100pF 5% 50V
C272	1-163-239-11	■	CERAMIC, CHIP 33pF 5% 50V
C273	1-163-251-11	s	CERAMIC, CHIP 100pF 5% 50V
C274	1-163-038-91	s	CERAMIC, CHIP 0.1uF 25V
C275	1-163-239-11	■	CERAMIC, CHIP 33pF 5% 50V
C276	1-163-038-91	s	CERAMIC, CHIP 0.1uF 25V
C277	1-163-038-91	s	CERAMIC, CHIP 0.1uF 25V
C278	1-163-038-91	s	CERAMIC, CHIP 0.1uF 25V
C279	1-163-121-00	s	CERAMIC, CHIP 150pF 5% 50V
C280	1-163-038-91	s	CERAMIC, CHIP 0.1uF 25V
C281	1-126-964-11	■	ELECT 10uF 20% 50V
C282	1-164-232-11	s	CERAMIC, CHIP 0.01uF 10% 100V
C283	1-163-038-91	■	CERAMIC, CHIP 0.1uF 25V
C284	1-163-809-11	■	CERAMIC, CHIP 0.047uF 10% 25V
C285	1-163-038-91	s	CERAMIC, CHIP 0.1uF 25V
C286	1-163-251-11	s	CERAMIC, CHIP 100pF 5% 50V

(AD-115 BOARD(ES-7(UC/J)))

Ref. No. or Q'ty	Part No.	SP	Description
C287	1-163-038-91	s	CERAMIC, CHIP 0.1uF 25V
C288	1-163-038-91	s	CERAMIC, CHIP 0.1uF 25V
C289	1-163-251-11	s	CERAMIC, CHIP 100pF 5% 50V
C290	1-124-903-11	s	ELECT 1uF 20% 50V
C291	1-163-038-91	s	CERAMIC, CHIP 0.1uF 25V
C292	1-126-933-11	s	ELECT 100uF 20% 16V
C293	1-163-038-91	s	CERAMIC, CHIP 0.1uF 25V
C294	1-164-232-11	s	CERAMIC, CHIP 0.01uF 10% 100V
C295	1-163-038-91	s	CERAMIC, CHIP 0.1uF 25V
C296	1-163-038-91	■	CERAMIC, CHIP 0.1uF 25V
C297	1-128-551-11	s	ELECT 22uF 20% 63V
C298	1-163-038-91	s	CERAMIC, CHIP 0.1uF 25V
C299	1-163-038-91	s	CERAMIC, CHIP 0.1uF 25V
C300	1-126-933-11	s	ELECT 100uF 20% 16V
C301	1-163-038-91	■	CERAMIC, CHIP 0.1uF 25V
C302	1-163-038-91	■	CERAMIC, CHIP 0.1uF 25V
C303	1-126-933-11	s	ELECT 100uF 20% 16V
C304	1-126-933-11	s	ELECT 100uF 20% 16V
C305	1-163-235-11	s	CERAMIC, CHIP 22pF 5% 50V
C306	1-163-235-11	s	CERAMIC, CHIP 22pF 5% 50V
C307	1-163-038-91	s	CERAMIC, CHIP 0.1uF 25V
C308	1-163-037-11	s	CERAMIC, CHIP 0.022uF 10% 25V
C309	1-126-967-11	s	ELECT 47uF 20% 50V
C310	1-126-967-11	■	ELECT 47uF 20% 50V
C311	1-126-933-11	■	ELECT 100uF 20% 16V
C312	1-163-038-91	s	CERAMIC, CHIP 0.1uF 25V
C313	1-163-038-91	s	CERAMIC, CHIP 0.1uF 25V
C314	1-163-038-91	s	CERAMIC, CHIP 0.1uF 25V
C315	1-126-967-11	s	ELECT 47uF 20% 50V
C316	1-126-967-11	s	ELECT 47uF 20% 50V
C317	1-163-038-91	s	CERAMIC, CHIP 0.1uF 25V
C318	1-163-038-91	■	CERAMIC, CHIP 0.1uF 25V
C319	1-163-038-91	s	CERAMIC, CHIP 0.1uF 25V
C320	1-126-967-11	s	ELECT 47uF 20% 50V
C321	1-163-038-91	■	CERAMIC, CHIP 0.1uF 25V
C322	1-126-967-11	s	ELECT 47uF 20% 50V
C323	1-126-933-11	s	ELECT 100uF 20% 16V
C324	1-163-038-91	s	CERAMIC, CHIP 0.1uF 25V
C326	1-163-239-11	s	CERAMIC, CHIP 33pF [illegible] 50V
C327	1-126-933-11	■	ELECT 100uF 20% 16V
C328	1-163-235-11	s	CERAMIC, CHIP 22pF [illegible] 50V
C329	1-163-231-11	■	CERAMIC, CHIP 15pF [illegible] 50V
C330	1-163-037-11	s	CERAMIC, CHIP 0.022uF 10% 25V
C331	1-163-037-11	s	CERAMIC, CHIP 0.022uF 10% 25V
C332	1-128-551-11	■	ELECT 22uF 20% 63V
C333	1-128-551-11	s	ELECT 22uF 20% 63V
C334	1-126-967-11	■	ELECT 47uF 20% 50V
C335	1-163-038-91	s	CERAMIC, CHIP 0.1uF 25V
C336	1-126-967-11	s	ELECT 47uF 20% 50V
C337	1-126-933-11	s	ELECT 100uF 20% 16V
C338	1-163-038-91	■	CERAMIC, CHIP 0.1uF 25V
C340	1-163-239-11	■	CERAMIC, CHIP 33pF 5% 50V
C341	1-126-933-11	■	ELECT 100uF 20% 16V
C342	1-163-235-11	s	CERAMIC, CHIP 22pF 5% 50V
C343	1-163-231-11	■	CERAMIC, CHIP 15pF [illegible] 50V
C344	1-163-037-11	■	CERAMIC, CHIP 0.022uF 10% 25V
C345	1-163-037-11	■	CERAMIC, CHIP 0.022uF 10% 25V
C346	1-128-551-11	s	ELECT 22uF 20% 63V
C347	1-128-551-11	s	ELECT 22uF 20% 63V

(AD-115 BOARD(ES-7(UC/J)))

Ref. No. or Q'ty	Part No.	SP	Description
C348	1-126-967-11	s	ELECT 47uF 20% 50V
C349	1-128-551-11	■	ELECT 22uF 20% 63V
C350	1-128-551-11	s	ELECT 22uF 20% 63V
C351	1-128-551-11	s	ELECT 22uF 20% 63V
C352	1-163-038-91	s	CERAMIC, CHIP 0.1uF 25V
C353	1-163-038-91	s	CERAMIC, CHIP 0.1uF 25V
C354	1-126-967-11	■	ELECT 47uF 20% 50V
C355-364	1-163-038-91	s	CERAMIC, CHIP 0.1uF 25V
C365	1-126-967-11	s	ELECT 47uF 20% 50V
C366	1-164-232-11	s	CERAMIC, CHIP 0.01uF 10% 100V
C367	1-164-232-11	■	CERAMIC, CHIP 0.01uF 10% 100V
C368	1-164-232-11	s	CERAMIC, CHIP 0.01uF 10% 100V
C369	1-163-038-91	s	CERAMIC, CHIP 0.1uF 25V
C370	1-163-037-11	s	CERAMIC, CHIP 0.022uF 10% 25V
C371	1-164-232-11	s	CERAMIC, CHIP 0.01uF 10% 100V
C372	1-163-037-11	■	CERAMIC, CHIP 0.022uF 10% 25V
C373	1-163-038-91	s	CERAMIC, CHIP 0.1uF 25V
C374	1-126-963-11	s	ELECT 4.7uF 20% 50V
C375	1-163-231-11	s	CERAMIC, CHIP 15pF 5% 50V
C376	1-163-038-91	s	CERAMIC, CHIP 0.1uF 25V
C377	1-126-967-11	■	ELECT 47uF 20% 50V
C378	1-126-967-11	■	ELECT 47uF 20% 50V
C379-382	1-163-038-91	s	CERAMIC, CHIP 0.1uF 25V
C400	1-126-967-11	s	ELECT 47uF 20% 50V
C401	1-126-964-11	s	ELECT 10uF 20% 50V
C402	1-163-038-91	s	CERAMIC, CHIP 0.1uF 25V
C403	1-163-038-91	s	CERAMIC, CHIP 0.1uF 25V
C404	1-163-251-11	s	CERAMIC, CHIP 100pF 5% 50V
C405	1-163-227-11	s	CERAMIC, CHIP 10pF 5% 50V
C406	1-163-133-00	s	CERAMIC, CHIP 470pF 5% 50V
C407-410	1-163-038-91	s	CERAMIC, CHIP 0.1uF 25V
C411	1-126-933-11	s	ELECT 100uF 20% 16V
C412-415	1-163-038-91	s	CERAMIC, CHIP 0.1uF 25V
C416	1-163-251-11	s	CERAMIC, CHIP 100pF 5% 50V
C417	1-163-251-11	■	CERAMIC, CHIP 100pF 5% 50V
C418	1-163-275-11	s	CERAMIC, CHIP 0.001uF 5% 50V
C419	1-163-251-11	s	CERAMIC, CHIP 100pF 5% 50V
C420	1-163-017-00	s	CERAMIC, CHIP 0.0047uF 5% 50V
C421-427	1-163-038-91	s	CERAMIC, CHIP 0.1uF 25V
C428	1-163-235-11	s	CERAMIC, CHIP 22pF 5% 50V
C429-438	1-163-038-91	s	CERAMIC, CHIP 0.1uF 25V
C439	1-163-251-11	s	CERAMIC, CHIP 100pF 5% 50V
C440	1-163-038-91	s	CERAMIC, CHIP 0.1uF 25V
C441	1-163-038-91	■	CERAMIC, CHIP 0.1uF 25V
C442	1-126-967-11	■	ELECT 47uF 20% 50V
C443	1-163-137-00	s	CERAMIC, CHIP 680pF 5% 50V
C444-448	1-163-038-91	s	CERAMIC, CHIP 0.1uF 25V
C449	1-126-967-11	■	ELECT 47uF 20% 50V
C450	1-163-038-91	s	CERAMIC, CHIP 0.1uF 25V
C451	1-163-275-11	s	CERAMIC, CHIP 0.001uF 5% 50V
C452	1-164-232-11	s	CERAMIC, CHIP 0.01uF 10% 100V
C453	1-163-038-91	s	CERAMIC, CHIP 0.1uF 25V
C454	1-164-232-11	s	CERAMIC, CHIP 0.01uF 10% 100V
C455	1-164-005-11	s	CERAMIC, CHIP 0.47uF 25V
C456-459	1-163-038-91	s	CERAMIC, CHIP 0.1uF 25V
C460	1-163-133-00	s	CERAMIC, CHIP 470pF ■ 50V
C461	1-163-038-91	s	CERAMIC, CHIP 0.1uF 25V
C462	1-163-239-11	s	CERAMIC, CHIP 33pF 5% 50V
C463	1-164-232-11	s	CERAMIC, CHIP 0.01uF 10% 100V

(AD-115 BOARD(ES-7(UC/J)))

Ref. No. or Q'ty	Part No.	SP	Description
C464	1-163-038-91	■	CERAMIC, CHIP 0.1uF 25V
C465	1-163-275-11	■	CERAMIC, CHIP 0.001uF 5% 50V
C466	1-163-038-91	■	CERAMIC, CHIP 0.1uF 25V
C467	1-163-038-91	s	CERAMIC, CHIP 0.1uF 25V
C468	1-163-038-91	s	CERAMIC, CHIP 0.1uF 25V
C469	1-163-037-11	s	CERAMIC, CHIP 0.022uF 10% 25V
C470	1-126-963-11	■	ELECT 4.7uF 20% 50V
C500	1-126-933-11	s	ELECT 100uF 20% 16V
C501	1-163-038-91	s	CERAMIC, CHIP 0.1uF 25V
C502	1-163-038-91	■	CERAMIC, CHIP 0.1uF 25V
C503	1-126-933-11	s	ELECT 100uF 20% 16V
C504	1-126-933-11	s	ELECT 100uF 20% 16V
C505	1-163-037-11	■	CERAMIC, CHIP 0.022uF 10% 25V
C506	1-163-229-11	s	CERAMIC, CHIP 12pF 5% 50V
C507	1-163-231-11	s	CERAMIC, CHIP 15pF 5% 50V
C508	1-163-087-00	s	CERAMIC, CHIP 4pF 50V
C509	1-163-038-91	s	CERAMIC, CHIP 0.1uF 25V
C510	1-163-037-11	s	CERAMIC, CHIP 0.022uF 10% 25V
C511	1-163-231-11	s	CERAMIC, CHIP 15pF 5% 50V
C512	1-126-964-11	s	ELECT 10uF 20% 50V
C513	1-163-038-91	■	CERAMIC, CHIP 0.1uF 25V
C514	1-164-232-11	■	CERAMIC, CHIP 0.01uF 10% 100V
C515	1-126-933-11	s	ELECT 100uF 20% 16V
C516	1-163-038-91	■	CERAMIC, CHIP 0.1uF 25V
C517	1-164-232-11	s	CERAMIC, CHIP 0.01uF 10% 100V
C518	1-163-038-91	s	CERAMIC, CHIP 0.1uF 25V
C519	1-126-933-11	■	ELECT 100uF 20% 16V
C520	1-163-038-91	s	CERAMIC, CHIP 0.1uF 25V
C521	1-163-133-00	s	CERAMIC, CHIP 470pF 5% 50V
C522	1-163-038-91	s	CERAMIC, CHIP 0.1uF 25V
C523	1-126-964-11	s	ELECT 10uF 20% 50V
C524	1-163-038-91	s	CERAMIC, CHIP 0.1uF 25V
C525	1-126-933-11	■	ELECT 100uF 20% 16V
C526	1-126-933-11	■	ELECT 100uF 20% 16V
C527-537	1-163-038-91	s	CERAMIC, CHIP 0.1uF 25V
C538	1-126-967-11	s	ELECT 47uF 20% 50V
C539	1-128-551-11	s	ELECT 22uF 20% 63V
C540	1-128-551-11	■	ELECT 22uF 20% 63V
C541	1-126-967-11	■	ELECT 47uF 20% 50V
C542	1-163-038-91	■	CERAMIC, CHIP 0.1uF 25V
C543	1-163-037-11	s	CERAMIC, CHIP 0.022uF 10% 25V
C544	1-126-933-11	s	ELECT 100uF 20% 16V
C545	1-163-038-91	s	CERAMIC, CHIP 0.1uF 25V
C546	1-163-037-11	s	CERAMIC, CHIP 0.022uF 10% 25V
C547	1-163-037-11	s	CERAMIC, CHIP 0.022uF 10% 25V
C548	1-126-933-11	s	ELECT 100uF 20% 16V
C549	1-163-227-11	s	CERAMIC, CHIP 10pF 5% 50V
C550	1-163-121-00	s	CERAMIC, CHIP 150pF 5% 50V
C551	1-126-924-11	■	ELECT 330uF 20% 10V
C552	1-163-235-11	s	CERAMIC, CHIP 22pF 5% 50V
C553	1-163-087-00	s	CERAMIC, CHIP 4pF 50V
C554	1-163-038-91	s	CERAMIC, CHIP 0.1uF 25V
C555	1-163-227-11	s	CERAMIC, CHIP 10pF 5% 50V
C556	1-163-235-11	s	CERAMIC, CHIP 22pF 5% 50V
C557	1-163-038-91	s	CERAMIC, CHIP 0.1uF 25V
C558	1-163-235-11	■	CERAMIC, CHIP 22pF 5% 50V
C559	1-126-933-11	s	ELECT 100uF 20% 16V
C560	1-163-037-11	s	CERAMIC, CHIP 0.022uF 10% 25V
C561	1-126-933-11	■	ELECT 100uF 20% 16V

(AD-115 BOARD(ES-7(UC/J)))

Ref. No. or Q'ty	Part No.	SP	Description
C562	1-126-933-11	s	ELECT 100uF 20% 16V
C563	1-163-038-91	s	CERAMIC, CHIP 0.1uF 25V
C564	1-163-038-91	s	CERAMIC, CHIP 0.1uF 25V
C565	1-163-038-91	s	CERAMIC, CHIP 0.1uF 25V
C566	1-126-933-11	s	ELECT 100uF 20% 16V
C567	1-126-933-11	s	ELECT 100uF 20% 16V
C568	1-163-239-11	■	CERAMIC, CHIP 33pF 5% 50V
C569	1-163-231-11	s	CERAMIC, CHIP 15pF 5% 50V
C570	1-163-038-91	s	CERAMIC, CHIP 0.1uF 25V
C571	1-163-251-11	■	CERAMIC, CHIP 100pF 5% 50V
C572	1-163-239-11	s	CERAMIC, CHIP 33pF 5% 50V
C573	1-163-251-11	s	CERAMIC, CHIP 100pF 5% 50V
C574	1-163-038-91	s	CERAMIC, CHIP 0.1uF 25V
C575	1-163-239-11	■	CERAMIC, CHIP 33pF 5% 50V
C576	1-163-038-91	s	CERAMIC, CHIP 0.1uF 25V
C577	1-163-038-91	s	CERAMIC, CHIP 0.1uF 25V
C578	1-163-038-91	■	CERAMIC, CHIP 0.1uF 25V
C579	1-163-121-00	■	CERAMIC, CHIP 150pF 5% 50V
C580	1-163-038-91	s	CERAMIC, CHIP 0.1uF 25V
C581	1-126-964-11	■	ELECT 10uF 20% 50V
C582	1-164-232-11	■	CERAMIC, CHIP 0.01uF 10% 100V
C583	1-163-038-91	s	CERAMIC, CHIP 0.1uF 25V
C584	1-163-809-11	s	CERAMIC, CHIP 0.047uF 10% 25V
C585	1-163-038-91	■	CERAMIC, CHIP 0.1uF 25V
C586	1-163-251-11	s	CERAMIC, CHIP 100pF 5% 50V
C587	1-163-038-91	s	CERAMIC, CHIP 0.1uF 25V
C588	1-163-038-91	s	CERAMIC, CHIP 0.1uF 25V
C589	1-163-251-11	s	CERAMIC, CHIP 100pF 5% 50V
C590	1-124-903-11	■	ELECT 1uF 20% 50V
C591	1-163-038-91	■	CERAMIC, CHIP 0.1uF 25V
C592	1-126-933-11	s	ELECT 100uF 20% 16V
C593	1-163-038-91	s	CERAMIC, CHIP 0.1uF 25V
C594	1-164-232-11	s	CERAMIC, CHIP 0.01uF 10% 100V
C595	1-163-038-91	s	CERAMIC, CHIP 0.1uF 25V
C596	1-163-038-91	■	CERAMIC, CHIP 0.1uF 25V
C597	1-163-038-91	■	CERAMIC, CHIP 0.1uF 25V
C598	1-128-551-11	s	ELECT 22uF 20% 63V
C599	1-163-038-91	s	CERAMIC, CHIP 0.1uF 25V
C600	1-126-933-11	s	ELECT 100uF 20% 16V
C601	1-163-038-91	s	CERAMIC, CHIP 0.1uF 25V
C602	1-163-038-91	s	CERAMIC, CHIP 0.1uF 25V
C603	1-126-933-11	s	ELECT 100uF 20% 16V
C604	1-126-933-11	s	ELECT 100uF 20% 16V
C605	1-163-235-11	s	CERAMIC, CHIP 22pF 5% 50V
C606	1-163-235-11	■	CERAMIC, CHIP 22pF 5% 50V
C607	1-163-038-91	s	CERAMIC, CHIP 0.1uF 25V
C608	1-163-037-11	s	CERAMIC, CHIP 0.022uF 10% 25V
C609	1-126-967-11	s	ELECT 47uF 20% 50V
C610	1-126-967-11	s	ELECT 47uF 20% 50V
C611	1-126-933-11	s	ELECT 100uF 20% 16V
C612	1-163-038-91	s	CERAMIC, CHIP 0.1uF 25V
C613	1-163-038-91	s	CERAMIC, CHIP 0.1uF 25V
C614	1-163-038-91	s	CERAMIC, CHIP 0.1uF 25V
C615	1-126-967-11	s	ELECT 47uF 20% 50V
C616	1-126-967-11	s	ELECT 47uF 20% 50V
C617	1-163-038-91	s	CERAMIC, CHIP 0.1uF 25V
C618	1-163-038-91	s	CERAMIC, CHIP 0.1uF 25V
C619	1-163-038-91	s	CERAMIC, CHIP 0.1uF 25V
C620	1-126-967-11	s	ELECT 47uF 20% 50V

(AD-115 BOARD(ES-7(UC/J)))

Ref. No. or Q'ty	Part No.	SP	Description
C621	1-163-038-91	■	CERAMIC, CHIP 0.1uF 25V
C622	1-126-967-11	s	ELECT 47uF 20% 50V
C623	1-126-933-11	■	ELECT 100uF 20% 16V
C624	1-163-038-91	s	CERAMIC, CHIP 0.1uF 25V
C625	1-163-239-11	s	CERAMIC, CHIP 33pF 5% 50V
C627	1-126-933-11	s	ELECT 100uF 20% 16V
C628	1-163-235-11	s	CERAMIC, CHIP 22pF 5% 50V
C629	1-163-231-11	■	CERAMIC, CHIP 15pF 5% 50V
C630	1-163-037-11	s	CERAMIC, CHIP 0.022uF 10% 25V
C631	1-163-037-11	s	CERAMIC, CHIP 0.022uF 10% 25V
C632	1-128-551-11	s	ELECT 22uF 20% 63V
C633	1-128-551-11	s	ELECT 22uF 20% 63V
C634	1-126-967-11	s	ELECT 47uF 20% 50V
C635	1-163-038-91	s	CERAMIC, CHIP 0.1uF 25V
C636	1-126-967-11	s	ELECT 47uF 20% 50V
C637	1-126-933-11	s	ELECT 100uF 20% 16V
C638	1-163-038-91	■	CERAMIC, CHIP 0.1uF 25V
C640	1-163-239-11	■	CERAMIC, CHIP 33pF ■ 50V
C641	1-126-933-11	s	ELECT 100uF 20% 16V
C642	1-163-235-11	s	CERAMIC, CHIP 22pF 5% 50V
C643	1-163-231-11	s	CERAMIC, CHIP 15pF 5% 50V
C644	1-163-037-11	s	CERAMIC, CHIP 0.022uF 10% 25V
C645	1-163-037-11	s	CERAMIC, CHIP 0.022uF 10% 25V
C646	1-128-551-11	s	ELECT 22uF 20% 63V
C647	1-128-551-11	s	ELECT 22uF 20% 63V
C648	1-126-967-11	s	ELECT 47uF 20% 50V
C649	1-128-551-11	■	ELECT 22uF 20% 63V
C650	1-128-551-11	s	ELECT 22uF 20% 63V
C651	1-128-551-11	■	ELECT 22uF 20% 63V
C652	1-163-038-91	s	CERAMIC, CHIP 0.1uF 25V
C653	1-163-038-91	■	CERAMIC, CHIP 0.1uF 25V
C654	1-126-967-11	s	ELECT 47uF 20% 50V
C655-664	1-163-038-91	s	CERAMIC, CHIP 0.1uF 25V
C665	1-126-967-11	■	ELECT 47uF 20% 50V
C666	1-164-232-11	s	CERAMIC, CHIP 0.01uF 10% 100V
C667	1-164-232-11	■	CERAMIC, CHIP 0.01uF 10% 100V
C668	1-164-232-11	s	CERAMIC, CHIP 0.01uF 10% 100V
C669	1-163-038-91	s	CERAMIC, CHIP 0.1uF 25V
C670	1-163-037-11	■	CERAMIC, CHIP 0.022uF 10% 25V
C671	1-164-232-11	s	CERAMIC, CHIP 0.01uF 10% 100V
C672	1-163-037-11	■	CERAMIC, CHIP 0.022uF 10% 25V
C673	1-163-038-91	s	CERAMIC, CHIP 0.1uF 25V
C674	1-126-963-11	s	ELECT 4.7uF 20% 50V
C675	1-163-231-11	s	CERAMIC, CHIP 15pF 5% 50V
C676	1-163-038-91	s	CERAMIC, CHIP 0.1uF 25V
C677	1-126-967-11	s	ELECT 47uF 20% 50V
C678	1-126-967-11	s	ELECT 47uF 20% 50V
C679-682	1-163-038-91	s	CERAMIC, CHIP 0.1uF 25V
C700	1-126-967-11	s	ELECT 47uF 20% 50V
C701	1-126-964-11	■	ELECT 10uF 20% 50V
C702	1-163-038-91	■	CERAMIC, CHIP 0.1uF 25V
C703	1-163-038-91	s	CERAMIC, CHIP 0.1uF 25V
C704	1-163-251-11	■	CERAMIC, CHIP 100pF 5% 50V
C705	1-163-227-11	■	CERAMIC, CHIP 10pF ■ 50V
C706	1-163-133-00	s	CERAMIC, CHIP 470pF 5% 50V
C707-710	1-163-038-91	s	CERAMIC, CHIP 0.1uF 25V
C711	1-126-933-11	s	ELECT 100uF 20% 16V
C712-715	1-163-038-91	■	CERAMIC, CHIP 0.1uF 25V
C716	1-163-251-11	s	CERAMIC, CHIP 100pF 5% 50V

(AD-115 BOARD(ES-7(UC/J)))

Ref. No. or Q'ty	Part No.	SP	Description
C717	1-163-251-11	s	CERAMIC, CHIP 100pF 5% 50V
C718	1-163-275-11	s	CERAMIC, CHIP 0.001uF 5% 50V
C719	1-163-251-11	s	CERAMIC, CHIP 100pF 5% 50V
C720	1-163-017-00	s	CERAMIC, CHIP 0.0047uF 5% 50V
C721	1-163-038-91	s	CERAMIC, CHIP 0.1uF 25V
C723-727	1-163-038-91	s	CERAMIC, CHIP 0.1uF 25V
C728	1-163-235-11	s	CERAMIC, CHIP 22pF 5% 50V
C729-738	1-163-038-91	s	CERAMIC, CHIP 0.1uF 25V
C739	1-163-251-11	s	CERAMIC, CHIP 100pF 5% 50V
C740	1-163-038-91	s	CERAMIC, CHIP 0.1uF 25V
C741	1-163-038-91	s	CERAMIC, CHIP 0.1uF 25V
C742	1-126-967-11	s	ELECT 47uF 20% 50V
C743	1-163-137-00	s	CERAMIC, CHIP 680pF 5% 50V
C744-748	1-163-038-91	s	CERAMIC, CHIP 0.1uF 25V
C749	1-126-967-11	s	ELECT 47uF 20% 50V
C750	1-163-038-91	■	CERAMIC, CHIP 0.1uF 25V
C751	1-163-275-11	■	CERAMIC, CHIP 0.001uF 5% 50V
C752	1-164-232-11	■	CERAMIC, CHIP 0.01uF 10% 100V
C753	1-163-038-91	s	CERAMIC, CHIP 0.1uF 25V
C754	1-164-232-11	■	CERAMIC, CHIP 0.01uF 10% 100V
C755	1-164-005-11	s	CERAMIC, CHIP 0.47uF 25V
C756-759	1-163-038-91	■	CERAMIC, CHIP 0.1uF 25V
C760	1-163-133-00	s	CERAMIC, CHIP 470pF 5% 50V
C761	1-163-038-91	s	CERAMIC, CHIP 0.1uF 25V
C762	1-163-239-11	s	CERAMIC, CHIP 33pF 5% 50V
C763	1-164-232-11	s	CERAMIC, CHIP 0.01uF 10% 100V
C764	1-163-038-91	s	CERAMIC, CHIP 0.1uF 25V
C765	1-163-275-11	■	CERAMIC, CHIP 0.001uF 5% 50V
C766	1-163-038-91	s	CERAMIC, CHIP 0.1uF 25V
C767	1-163-038-91	s	CERAMIC, CHIP 0.1uF 25V
C768	1-163-038-91	s	CERAMIC, CHIP 0.1uF 25V
C800	1-126-967-11	s	ELECT 47uF 20% 50V
C801	1-163-038-91	s	CERAMIC, CHIP 0.1uF 25V
C802	1-163-038-91	s	CERAMIC, CHIP 0.1uF 25V
C803	1-126-934-11	s	ELECT 220uF 20% 16V
C804	1-126-934-11	s	ELECT 220uF 20% 16V
C805	1-126-934-11	s	ELECT 220uF 20% 16V
C806	1-126-925-11	s	ELECT 470uF 20% 10V
C807-811	1-163-038-91	s	CERAMIC, CHIP 0.1uF 25V
C812	1-126-925-11	s	ELECT 470uF 20% 10V
C813	1-163-038-91	s	CERAMIC, CHIP 0.1uF 25V
C814	1-163-038-91	s	CERAMIC, CHIP 0.1uF 25V
C815	1-163-251-11	s	CERAMIC, CHIP 100pF 5% 50V
C816	1-163-038-91	s	CERAMIC, CHIP 0.1uF 25V
C817	1-163-038-91	s	CERAMIC, CHIP 0.1uF 25V
C818-821	1-126-934-11	s	ELECT 220uF 20% 16V
C822-826	1-163-038-91	■	CERAMIC, CHIP 0.1uF 25V
C827	1-163-251-11	s	CERAMIC, CHIP 100pF 5% 50V
C828-831	1-163-038-91	s	CERAMIC, CHIP 0.1uF 25V
C832-836	1-126-933-11	s	ELECT 100uF 20% 16V
C837-842	1-163-038-91	s	CERAMIC, CHIP 0.1uF 25V
C843	1-126-963-11	s	ELECT 4.7uF 20% 50V
C900	1-126-933-11	s	ELECT 100uF 20% 16V
C901	1-163-038-91	■	CERAMIC, CHIP 0.1uF 25V
C902	1-163-038-91	s	CERAMIC, CHIP 0.1uF 25V
C903	1-163-038-91	s	CERAMIC, CHIP 0.1uF 25V
C904	1-163-239-11	s	CERAMIC, CHIP 33pF 5% 50V
C905	1-163-038-91	s	CERAMIC, CHIP 0.1uF 25V
C906	1-163-239-11	s	CERAMIC, CHIP 33pF 5% 50V

(AD-115 BOARD(ES-7(UC/J)))

Ref. No. or Q'ty	Part No.	SP	Description
C907	1-163-251-11	s	CERAMIC, CHIP 100pF 5% 50V
C908	1-163-038-91	■	CERAMIC, CHIP 0.1uF 25V
C909	1-163-239-11	s	CERAMIC, CHIP 33pF 5% 50V
C910	1-126-967-11	s	ELECT 47uF 20% 50V
C911	1-163-239-11	s	CERAMIC, CHIP 33pF 5% 50V
C912	1-126-964-11	s	ELECT 10uF 20% 50V
C913	1-163-239-11	s	CERAMIC, CHIP 33pF 5% 50V
C914	1-163-038-91	s	CERAMIC, CHIP 0.1uF 25V
C915	1-163-121-00	s	CERAMIC, CHIP 150pF 5% 50V
C916	1-163-239-11	■	CERAMIC, CHIP 33pF 5% 50V
C917	1-163-251-11	s	CERAMIC, CHIP 100pF 5% 50V
C918-923	1-163-038-91	s	CERAMIC, CHIP 0.1uF 25V
C924	1-163-275-11	s	CERAMIC, CHIP 0.001uF 5% 50V
C925	1-163-251-11	s	CERAMIC, CHIP 100pF 5% 50V
C926	1-163-038-91	s	CERAMIC, CHIP 0.1uF 25V
C927	1-163-235-11	■	CERAMIC, CHIP 22pF 5% 50V
C928	1-163-275-11	s	CERAMIC, CHIP 0.001uF 5% 50V
C929	1-163-038-91	s	CERAMIC, CHIP 0.1uF 25V
C930	1-163-275-11	s	CERAMIC, CHIP 0.001uF 5% 50V
C931	1-164-232-11	s	CERAMIC, CHIP 0.01uF 10% 100V
C932	1-126-964-11	■	ELECT 10uF 20% 50V
C933	1-163-038-91	s	CERAMIC, CHIP 0.1uF 25V
C934	1-163-038-91	s	CERAMIC, CHIP 0.1uF 25V
C935	1-126-963-11	s	ELECT 4.7uF 20% 50V
C936	1-126-933-11	s	ELECT 100uF 20% 16V
C937	1-164-232-11	s	CERAMIC, CHIP 0.01uF 10% 100V
C938	1-124-903-11	s	ELECT 1uF 20% 50V
C939	1-163-809-11	s	CERAMIC, CHIP 0.047uF 10% 25V
C940	1-163-809-11	s	CERAMIC, CHIP 0.047uF 10% 25V
C941	1-163-038-91	s	CERAMIC, CHIP 0.1uF 25V
C942	1-163-037-11	s	CERAMIC, CHIP 0.022uF 10% 25V
C943	1-163-099-00	s	CERAMIC, CHIP 18pF 5% 50V
C944	1-164-232-11	s	CERAMIC, CHIP 0.01uF 10% 100V
C945	1-126-933-11	s	ELECT 100uF 20% 16V
C946	1-131-351-00	s	TANTALUM 4.7uF 10% 35V
C947	1-163-275-11	s	CERAMIC, CHIP 0.001uF 5% 50V
C948	1-163-275-11	s	CERAMIC, CHIP 0.001uF 5% 50V
C949	1-163-227-11	s	CERAMIC, CHIP 10pF 5% 50V
C950	1-164-232-11	s	CERAMIC, CHIP 0.01uF 10% 100V
C951	1-163-038-91	s	CERAMIC, CHIP 0.1uF 25V
C952	1-163-275-11	s	CERAMIC, CHIP 0.001uF ■ 50V
C954	1-163-237-11	s	CERAMIC, CHIP 27pF 5% 50V
C955	1-163-237-11	■	CERAMIC, CHIP 27pF 5% 50V
C956	1-126-967-11	s	ELECT 47uF 20% 50V
C957	1-126-967-11	■	ELECT 47uF 20% 50V
C958	1-163-231-11	s	CERAMIC, CHIP 15pF 5% 50V
C959	1-163-231-11	■	CERAMIC, CHIP 15pF ■ 50V
C960	1-163-239-11	s	CERAMIC, CHIP 33pF 5% 50V
C961	1-163-239-11	s	CERAMIC, CHIP 33pF 5% 50V
C964	1-126-933-11	■	ELECT 100uF 20% 16V
C965	1-126-933-11	s	ELECT 100uF 20% 16V
C966	1-163-235-11	■	CERAMIC, CHIP 22pF 5% 50V
C967	1-163-235-11	s	CERAMIC, CHIP 22pF 5% 50V
C968	1-163-037-11	s	CERAMIC, CHIP 0.022uF 10% 25V
C969	1-163-038-91	s	CERAMIC, CHIP 0.1uF 25V
C970	1-163-037-11	s	CERAMIC, CHIP 0.022uF 10% 25V
C971	1-163-038-91	■	CERAMIC, CHIP 0.1uF 25V
C972	1-126-933-11	s	ELECT 100uF 20% 16V
C973	1-126-933-11	■	ELECT 100uF 20% 16V

(AD-115 BOARD(ES-7(UC/J)))

Ref. No. or Q'ty	Part No.	SP	Description
C974	1-163-038-91	s	CERAMIC, CHIP 0.1uF 25V
C975	1-163-038-91	s	CERAMIC, CHIP 0.1uF 25V
C976	1-163-239-11	s	CERAMIC, CHIP 33pF 5% 50V
C977	1-163-038-91	s	CERAMIC, CHIP 0.1uF 25V
C978	1-163-239-11	s	CERAMIC, CHIP 33pF 5% 50V
C979	1-163-038-91	s	CERAMIC, CHIP 0.1uF 25V
C980	1-163-239-11	s	CERAMIC, CHIP 33pF 5% 50V
C981	1-126-967-11	s	ELECT 47uF 20% 50V
C982	1-163-239-11	s	CERAMIC, CHIP 33pF 5% 50V
C983	1-126-964-11	s	ELECT 10uF 20% 50V
C984	1-163-239-11	s	CERAMIC, CHIP 33pF 5% 50V
C985	1-163-038-91	s	CERAMIC, CHIP 0.1uF 25V
C986	1-163-121-00	s	CERAMIC, CHIP 150pF 5% 50V
C987	1-163-239-11	s	CERAMIC, CHIP 33pF 5% 50V
C988	1-163-251-11	s	CERAMIC, CHIP 100pF 5% 50V
C989	1-163-038-91	s	CERAMIC, CHIP 0.1uF 25V
C990	1-163-038-91	s	CERAMIC, CHIP 0.1uF 25V
C991	1-163-038-91	s	CERAMIC, CHIP 0.1uF 25V
C995	1-163-275-11	s	CERAMIC, CHIP 0.001uF 5% 50V
C996	1-163-251-11	s	CERAMIC, CHIP 100pF 5% 50V
C997	1-163-038-91	s	CERAMIC, CHIP 0.1uF 25V
C998	1-163-235-11	s	CERAMIC, CHIP 22pF 5% 50V
C999	1-163-038-91	■	CERAMIC, CHIP 0.1uF 25V
C1000	1-163-275-11	s	CERAMIC, CHIP 0.001uF 5% 50V
C1001	1-163-275-11	■	CERAMIC, CHIP 0.001uF 5% 50V
C1002	1-164-232-11	s	CERAMIC, CHIP 0.01uF 10% 100V
C1003	1-126-964-11	s	ELECT 10uF 20% 50V
C1004	1-163-038-91	s	CERAMIC, CHIP 0.1uF 25V
C1005	1-163-038-91	s	CERAMIC, CHIP 0.1uF 25V
C1006	1-126-963-11	s	ELECT 4.7uF 20% 50V
C1007	1-124-903-11	s	ELECT 1uF 20% 50V
C1008	1-126-933-11	■	ELECT 100uF 20% 16V
C1009	1-164-232-11	s	CERAMIC, CHIP 0.01uF 10% 100V
C1010	1-163-809-11	s	CERAMIC, CHIP 0.047uF 10% 25V
C1011	1-163-809-11	s	CERAMIC, CHIP 0.047uF 10% 25V
C1012	1-163-038-91	■	CERAMIC, CHIP 0.1uF 25V
C1013	1-164-232-11	s	CERAMIC, CHIP 0.01uF 10% 100V
C1014	1-163-038-91	s	CERAMIC, CHIP 0.1uF 25V
C1015	1-163-099-00	s	CERAMIC, CHIP 18pF 5% 50V
C1016	1-164-232-11	s	CERAMIC, CHIP 0.01uF 10% 100V
C1017	1-126-933-11	■	ELECT 100uF 20% 16V
C1018	1-131-351-00	s	TANTALUM 4.7uF 10% 35V
C1019	1-163-275-11	s	CERAMIC, CHIP 0.001uF 5% 50V
C1020	1-163-275-11	s	CERAMIC, CHIP 0.001uF 5% 50V
C1021	1-163-227-11	s	CERAMIC, CHIP 10pF 5% 50V
C1022	1-163-038-91	s	CERAMIC, CHIP 0.1uF 25V
C1023	1-163-275-11	s	CERAMIC, CHIP 0.001uF 5% 50V
C1025	1-163-237-11	s	CERAMIC, CHIP 27pF 5% 50V
C1026	1-163-237-11	s	CERAMIC, CHIP 27pF 5% 50V
C1027	1-126-967-11	s	ELECT 47uF 20% 50V
C1028	1-126-967-11	s	ELECT 47uF 20% 50V
C1029	1-163-231-11	s	CERAMIC, CHIP 15pF 5% 50V
C1030	1-163-231-11	■	CERAMIC, CHIP 15pF 5% 50V
C1031	1-163-239-11	s	CERAMIC, CHIP 33pF 5% 50V
C1032	1-163-239-11	s	CERAMIC, CHIP 33pF 5% 50V
C1035	1-126-933-11	s	ELECT 100uF 20% 16V
C1036	1-126-933-11	s	ELECT 100uF 20% 16V
C1037	1-163-235-11	s	CERAMIC, CHIP 22pF 5% 50V
C1038	1-163-235-11	s	CERAMIC, CHIP 22pF 5% 50V

(AD-115 BOARD(ES-7(UC/J)))

Ref. No. or Q'ty	Part No.	SP	Description
C1043	1-126-933-11	s	ELECT 100uF 20% 16V
C1044	1-126-933-11	s	ELECT 100uF 20% 16V
C1045	1-163-038-91	s	CERAMIC, CHIP 0.1uF 25V
C1046	1-163-038-91	s	CERAMIC, CHIP 0.1uF 25V
C1047	1-163-251-11	s	CERAMIC, CHIP 100pF 5% 50V
C1048-1051	1-163-227-11	s	CERAMIC, CHIP 10pF ■ 50V
C1052	1-163-038-91	s	CERAMIC, CHIP 0.1uF 25V
C1053	1-163-038-91	s	CERAMIC, CHIP 0.1uF 25V
C1054	1-163-224-11	s	CERAMIC, CHIP 7pF 50V
C1055	1-163-224-11	s	CERAMIC, CHIP 7pF 50V
C1056-1059	1-163-227-11	s	CERAMIC, CHIP 10pF 5% 50V
C1060	1-163-038-91	■	CERAMIC, CHIP 0.1uF 25V
C1061	1-163-038-91	s	CERAMIC, CHIP 0.1uF 25V
C1062	1-163-224-11	■	CERAMIC, CHIP 7pF 50V
C1063	1-163-224-11	■	CERAMIC, CHIP 7pF 50V
CN10	1-766-239-11	o	CONNECTOR, CIRCULAR 4P(S), FEMALE
CN11	1-774-965-11	o	CONNECTOR, 3-BNC, FEMALE
CN20	1-766-239-11	o	CONNECTOR, CIRCULAR 4P(S), FEMALE
CN21	1-774-965-11	o	CONNECTOR, 3-BNC, FEMALE
CN31	1-774-966-11	■	CONNECTOR, 4-BNC, FEMALE
CN40	1-766-239-11	o	CONNECTOR, CIRCULAR 4P(S), FEMALE
CN41	1-774-965-11	o	CONNECTOR, 3-BNC, FEMALE
CN501	1-778-261-11	o	CONNECTOR, BB 124P, MALE
CN503	1-778-261-11	o	CONNECTOR, BB 124P, MALE
CV200	1-141-373-11	■	CAP, TRIMMER, CHIP 10pF
CV500	1-141-373-11	■	CAP, TRIMMER, CHIP 10pF
D200-204	8-719-024-81	s	DIODE 1SS300-TE85L
D400	8-719-024-81	s	DIODE 1SS300-TE85L
D401	8-719-024-81	s	DIODE 1SS300-TE85L
D402	8-719-024-81	s	DIODE 1SS300-TE85L
D404	8-719-049-03	s	DIODE KV1851A-1
D405	8-719-049-03	■	DIODE KV1851A-1
D500-504	8-719-024-81	s	DIODE 1SS300-TE85L
D700	8-719-024-81	■	DIODE 1SS300-TE85L
D701	8-719-024-81	s	DIODE 1SS300-TE85L
D702	8-719-024-81	s	DIODE 1SS300-TE85L
D704	8-719-049-03	s	DIODE KV1851A-1
D705	8-719-049-03	s	DIODE KV1851A-1
FB100-137	1-500-184-11	s	BEAD, FERRITE
FB804	1-500-184-11	s	BEAD, FERRITE
FB805	1-500-184-11	s	BEAD, FERRITE
FB806-809	1-500-202-11	■	BEAD, FERRITE
FL200	1-239-085-11	s	FILTER, LOW-PASS
FL201	1-239-085-11	s	FILTER, LOW-PASS
FL202	1-239-085-11	s	FILTER, LOW-PASS
FL203	1-236-716-11	s	FILTER, LOW-PASS
FL204	1-233-248-11	s	FILTER, LOW-PASS
FL205	1-233-248-11	s	FILTER, LOW-PASS
FL300	1-233-614-11	s	FILTER, LOW-PASS
FL301	1-233-599-11	s	FILTER, LOW-PASS
FL302	1-233-599-11	s	FILTER, LOW-PASS
FL303	1-239-642-21	s	EMIFIL ARRAY, CHIP

(AD-115 BOARD(ES-7(UC/J)))

Ref. No. or Q'ty	Part No.	SP	Description
FL304	1-239-642-21	s	EMIFIL ARRAY, CHIP
FL400	1-239-642-21	s	EMIFIL ARRAY, CHIP
FL500	1-239-085-11	s	FILTER, LOW-PASS
FL501	1-239-085-11	s	FILTER, LOW-PASS
FL502	1-239-085-11	s	FILTER, LOW-PASS
FL503	1-236-716-11	■	FILTER, LOW-PASS
FL504	1-233-248-11	■	FILTER, LOW-PASS
FL505	1-233-248-11	■	FILTER, LOW-PASS
FL600	1-233-614-11	s	FILTER, LOW-PASS
FL601	1-233-599-11	s	FILTER, LOW-PASS
FL602	1-233-599-11	s	FILTER, LOW-PASS
FL603	1-239-642-21	■	EMIFIL ARRAY, CHIP
FL604	1-239-642-21	■	EMIFIL ARRAY, CHIP
FL700	1-239-642-21	s	EMIFIL ARRAY, CHIP
IC100	8-759-710-62	s	IC NJM2246M
IC101	8-759-710-62	s	IC NJM2246M
IC102	8-759-711-32	s	IC NJM2245M
IC103	8-759-711-32	s	IC NJM2245M
IC104	8-759-710-62	s	IC NJM2246M
IC105	8-759-710-62	s	IC NJM2246M
IC106	8-752-052-82	■	IC CXA1432M
IC107	8-759-710-62	s	IC NJM2246M
IC108	8-759-009-07	s	IC MC14053BF
IC109	8-759-711-32	s	IC NJM2245M
IC110	8-759-711-32	s	IC NJM2245M
IC111	8-759-711-32	s	IC NJM2245M
IC112	8-759-009-07	s	IC MC14053BF
IC113	8-759-711-32	s	IC NJM2245M
IC114	8-759-711-32	s	IC NJM2245M
IC115	8-759-711-32	■	IC NJM2245M
IC116	8-759-009-07	s	IC MC14053BF
IC117	8-759-514-57	s	IC BA7046F
IC118	8-759-710-12	s	IC NJM2230M
IC119	8-759-035-90	s	IC TC7S02F
IC120	8-759-987-27	s	IC LM1881M
IC125	8-759-925-76	s	IC SN74HC08ANS
IC200	8-759-111-69	s	IC UPC1037HA
IC201	8-752-334-55	s	IC CXD1175M
IC202	8-752-342-61	s	IC CXD2105AQ
IC203	8-759-256-44	■	IC NJM2235M-TE2
IC204	8-759-256-44	s	IC NJM2235M-TE2
IC205	8-759-234-77	s	IC TC4S66F
IC206	8-759-271-04	■	IC LT1252CS8
IC207	8-759-987-27	■	IC LM1881M
IC208	8-759-239-58	s	IC TC74HC221AF
IC209	8-759-983-69	■	IC LM358PS
IC210	8-759-925-90	s	IC SN74HC74ANS
IC211	8-759-926-07	s	IC SN74HC132ANS
IC212	8-759-710-86	s	IC NJM2233BM-T1
IC213	8-759-710-86	s	IC NJM2233BM-T1
IC214	8-759-239-58	s	IC TC74HC221AF
IC215	8-759-926-07	s	IC SN74HC132ANS
IC216	8-759-980-04	s	IC LM311PS
IC217	8-759-603-54	s	IC M51271FP
IC218	8-759-271-04	s	IC LT1252CS8
IC219	8-759-271-04	■	IC LT1252CS8
IC300	8-759-710-86	s	IC NJM2233BM-T1
IC301	8-759-271-04	s	IC LT1252CS8
IC302	8-759-908-15	s	IC TL431CLP

(AD-115 BOARD(ES-7(UC/J)))

Ref. No. or Q'ty	Part No.	SP	Description
IC303	8-759-981-48	s	IC NJM082M
IC304	8-759-710-86	s	IC NJM2233BM-T1
IC305	8-759-271-04	■	IC LT1252CS8
IC306	8-759-710-86	s	IC NJM2233BM-T1
IC307	8-759-271-04	s	IC LT1252CS8
IC308	8-759-925-74	s	IC TC74HC04ANS
IC309	8-759-926-82	s	IC SN74HC574ANS
IC310	8-759-926-82	■	IC SN74HC574ANS
IC311	8-759-926-82	s	IC SN74HC574ANS
IC312	8-759-926-82	s	IC SN74HC574ANS
IC313	8-759-515-12	s	IC SN74ALS574BNS
IC314	8-759-386-44	■	IC TLC5733IPW
IC315	8-759-926-82	s	IC SN74HC574ANS
IC316	8-759-515-12	■	IC SN74ALS574BNS
IC400	8-759-256-44	■	IC NJM2235M-TE2
IC401	8-759-980-04	s	IC LM311PS
IC402	8-759-987-27	s	IC LM1881M
IC403	8-759-239-58	s	IC TC74HC221AF
IC404	8-759-239-58	s	IC TC74HC221AF
IC405	8-759-239-58	■	IC TC74HC221AF
IC406	8-759-926-24	■	IC SN74HC164ANS
IC407	8-759-925-85	■	IC SN74HC32ANS
IC408	8-759-916-23	s	IC SN74HC27N
IC409	8-759-037-79	s	IC MC74HC163AF
IC410	8-759-037-79	s	IC MC74HC163AF
IC411	8-759-037-79	s	IC MC74HC163AF
IC412	8-759-925-78	s	IC SN74HC10ANS
IC413	8-759-925-74	s	IC TC74HC04ANS
IC414	8-759-925-81	s	IC SN74HC20ANS
IC415	8-759-927-46	s	IC SN74HC00ANS
IC416	8-759-981-48	■	IC NJM082M
IC417	8-759-981-48	s	IC NJM082M
IC418	8-759-926-48	■	IC SN74HC244NS
IC419	8-759-925-90	■	IC SN74HC74ANS
IC420	8-759-239-58	■	IC TC74HC221AF
IC421	8-759-926-29	■	IC SN74HC175ANS
IC422	8-759-926-24	■	IC SN74HC164ANS
IC423	8-759-927-46	■	IC SN74HC00ANS
IC424	8-759-239-58	s	IC TC74HC221AF
IC425	8-759-926-24	s	IC SN74HC164ANS
IC426	8-759-926-24	■	IC SN74HC164ANS
IC427	8-759-925-90	s	IC SN74HC74ANS
IC434	8-759-925-74	s	IC TC74HC04ANS
IC435	8-759-359-54	s	IC SN74ALS244CNS-E20
IC501	8-752-334-55	s	IC CXD1175M
IC502	8-752-342-61	s	IC CXD2105AQ
IC503	8-759-256-44	s	IC NJM2235M-TE2
IC504	8-759-256-44	s	IC NJM2235M-TE2
IC505	8-759-111-69	s	IC UPC1037HA
IC506	8-759-271-04	s	IC LT1252CS8
IC507	8-759-987-27	s	IC LM1881M
IC508	8-759-239-58	s	IC TC74HC221AF
IC509	8-759-234-77	s	IC TC4S66F
IC510	8-759-983-69	s	IC LM358PS
IC511	8-759-925-90	s	IC SN74HC74ANS
IC512	8-759-710-86	s	IC NJM2233BM-T1
IC513	8-759-710-86	s	IC NJM2233BM-T1
IC514	8-759-239-58	s	IC TC74HC221AF
IC515	8-759-926-07	s	IC SN74HC132ANS

(AD-115 BOARD (ES-7(UC/J)))

Ref. No. or Q'ty	Part No.	SP	Description
IC516	8-759-980-04	s	IC LM311PS
IC517	8-759-603-54	s	IC M51271FP
IC518	8-759-271-04	s	IC LT1252CS8
IC519	8-759-271-04	s	IC LT1252CS8
IC520	8-759-926-07	s	IC SN74HC132ANS
IC600	8-759-710-86	s	IC NJM2233BM-T1
IC601	8-759-271-04	■	IC LT1252CS8
IC602	8-759-908-15	s	IC TL431CLP
IC603	8-759-981-48	s	IC NJM082M
IC604	8-759-710-86	■	IC NJM2233BM-T1
IC605	8-759-271-04	s	IC LT1252CS8
IC606	8-759-710-86	s	IC NJM2233BM-T1
IC607	8-759-271-04	s	IC LT1252CS8
IC608	8-759-925-74	s	IC TC74HC04ANS
IC609	8-759-926-82	s	IC SN74HC574ANS
IC610	8-759-926-82	■	IC SN74HC574ANS
IC611	8-759-926-82	■	IC SN74HC574ANS
IC612	8-759-926-82	s	IC SN74HC574ANS
IC613	8-759-515-12	s	IC SN74ALS574BNS
IC614	8-759-386-44	s	IC TLC5733IPW
IC615	8-759-926-82	s	IC SN74HC574ANS
IC616	8-759-515-12	s	IC SN74ALS574BNS
IC700	8-759-256-44	s	IC NJM2235M-TE2
IC701	8-759-980-04	s	IC LM311PS
IC702	8-759-987-27	s	IC LM1881M
IC703	8-759-239-58	s	IC TC74HC221AF
IC704	8-759-239-58	s	IC TC74HC221AF
IC705	8-759-239-58	s	IC TC74HC221AF
IC706	8-759-926-24	s	IC SN74HC164ANS
IC707	8-759-925-74	s	IC TC74HC04ANS
IC708	8-759-925-85	s	IC SN74HC32ANS
IC709	8-759-037-79	s	IC MC74HC163AF
IC710	8-759-037-79	■	IC MC74HC163AF
IC711	8-759-037-79	s	IC MC74HC163AF
IC712	8-759-925-78	s	IC SN74HC10ANS
IC713	8-759-925-74	s	IC TC74HC04ANS
IC714	8-759-925-81	s	IC SN74HC20ANS
IC715	8-759-927-46	s	IC SN74HC00ANS
IC716	8-759-981-48	s	IC NJM082M
IC717	8-759-981-48	s	IC NJM082M
IC718	8-759-926-48	s	IC SN74HC244NS
IC719	8-759-925-90	s	IC SN74HC74ANS
IC720	8-759-239-58	s	IC TC74HC221AF
IC721	8-759-926-29	s	IC SN74HC175ANS
IC722	8-759-926-24	s	IC SN74HC164ANS
IC723	8-759-927-46	s	IC SN74HC00ANS
IC724	8-759-239-58	s	IC TC74HC221AF
IC725	8-759-926-24	s	IC SN74HC164ANS
IC726	8-759-926-24	s	IC SN74HC164ANS
IC727	8-759-925-90	s	IC SN74HC74ANS
IC800	8-759-157-17	s	IC PQ05SZ1U
IC801	8-759-157-17	s	IC PQ05SZ1U
IC802	8-759-701-59	s	IC NJM78M09FA
IC803	8-759-701-84	s	IC NJM7905FA
IC804	8-759-987-27	■	IC LM1881M
IC805	8-759-239-58	s	IC TC74HC221AF
IC806	8-759-927-12	s	IC SN74HCT244ANS
IC807	8-759-926-24	s	IC SN74HC164ANS
IC808	8-759-926-82	s	IC SN74HC574ANS

(AD-115 BOARD(ES-7(UC/J)))

Ref. No. or Q'ty	Part No.	SP	Description
IC809	8-759-925-90	s	IC SN74HC74ANS
IC810	8-759-926-24	s	IC SN74HC164ANS
IC811	8-759-926-82	s	IC SN74HC574ANS
IC812	8-759-035-93	■	IC TC7S32F-TE85L
L100	1-410-482-31	s	INDUCTOR 100uH
L101	1-410-482-31	s	INDUCTOR 100uH
L102	1-408-419-00	s	INDUCTOR 68uH
L103-111	1-410-482-31	s	INDUCTOR 100uH
L200	1-410-482-31	s	INDUCTOR 100uH
L201	1-410-482-31	s	INDUCTOR 100uH
L202	1-410-482-31	s	INDUCTOR 100uH
L203	1-410-478-11	s	INDUCTOR 47uH
L204	1-410-478-11	s	INDUCTOR 47uH
L205	1-410-478-11	s	INDUCTOR 47uH
L206	1-410-482-31	s	INDUCTOR 100uH
L207	1-410-470-11	s	INDUCTOR 10uH
L208	1-410-464-11	s	INDUCTOR 3.3uH
L209	1-410-482-31	s	INDUCTOR 100uH
L210	1-410-482-31	s	INDUCTOR 100uH
L211	1-410-478-11	s	INDUCTOR 47uH
L212	1-408-425-00	s	INDUCTOR 220uH
L213	1-408-425-00	s	INDUCTOR 220uH
L214	1-410-478-11	s	INDUCTOR 47uH
L215	1-410-478-11	s	INDUCTOR 47uH
L216	1-410-478-11	■	INDUCTOR 47uH
L217	1-408-429-00	s	INDUCTOR 470uH
L218	1-410-482-31	■	INDUCTOR 100uH
L219	1-408-414-00	■	INDUCTOR 27uH
L220	1-408-414-00	s	INDUCTOR 27uH
L221	1-410-478-11	s	INDUCTOR 47uH
L222	1-410-478-11	s	INDUCTOR 47uH
L223	1-410-482-31	s	INDUCTOR 100uH
L224	1-410-482-31	s	INDUCTOR 100uH
L300-305	1-410-482-31	s	INDUCTOR 100uH
L306	1-410-478-11	s	INDUCTOR 47uH
L307	1-408-397-00	s	INDUCTOR 1uH
L400	1-408-419-00	s	INDUCTOR 68uH
L401	1-410-478-11	s	INDUCTOR 47uH
L402	1-410-478-11	s	INDUCTOR 47uH
L403	1-408-397-00	s	INDUCTOR 1uH
L404	1-408-397-00	s	INDUCTOR 1uH
L500	1-410-478-11	s	INDUCTOR 47uH
L501	1-410-482-31	s	INDUCTOR 100uH
L502	1-410-482-31	s	INDUCTOR 100uH
L503	1-408-425-00	s	INDUCTOR 220uH
L504	1-408-425-00	s	INDUCTOR 220uH
L505	1-410-482-31	s	INDUCTOR 100uH
L506-511	1-410-478-11	s	INDUCTOR 47uH
L512	1-408-429-00	s	INDUCTOR 470uH
L513	1-410-482-31	s	INDUCTOR 100uH
L514	1-410-482-31	s	INDUCTOR 100uH
L515	1-408-414-00	s	INDUCTOR 27uH
L516	1-408-414-00	s	INDUCTOR 27uH
L517	1-410-478-11	s	INDUCTOR 47uH
L518	1-410-478-11	s	INDUCTOR 47uH
L519	1-410-470-11	s	INDUCTOR 10uH
L520	1-410-464-11	s	INDUCTOR 3.3uH
L521-524	1-410-482-31	s	INDUCTOR 100uH
L600-605	1-410-482-31	s	INDUCTOR 100uH

(AD-115 BOARD(ES-7(UC/J)))

Ref. No. or Q'ty	Part No.	SP	Description
L606	1-410-478-11	s	INDUCTOR 47uH
L607	1-408-397-00	s	INDUCTOR 1uH
L700	1-408-419-00	s	INDUCTOR 68uH
L701	1-410-478-11	■	INDUCTOR 47uH
L702	1-410-478-11	s	INDUCTOR 47uH
L703	1-408-397-00	s	INDUCTOR 1uH
L800-803	1-412-525-31	■	INDUCTOR 10uH
L804	1-410-482-31	■	INDUCTOR 100uH
L805	1-408-397-00	s	INDUCTOR 1uH
LV400	1-410-286-11	s	INDUCTOR, VAR 1uH
LV700	1-410-286-11	s	INDUCTOR, VAR 1uH
PS800 ⚠	1-532-675-21	s	LINK, IC 1.5A
PS801 ⚠	1-532-675-21	s	LINK, IC 1.5A
PS802 ⚠	1-532-675-21	■	LINK, IC 1.5A
PS803 ⚠	1-532-675-21	s	LINK, IC 1.5A
Q100	8-729-117-32	s	TRANSISTOR 2SC4177
Q101	8-729-117-32	s	TRANSISTOR 2SC4177
Q102	8-729-117-32	s	TRANSISTOR 2SC4177
Q103	8-729-140-63	■	TRANSISTOR 2SA1611-M5M6
Q104	8-729-140-63	■	TRANSISTOR 2SA1611-M5M6
Q105	8-729-117-32	s	TRANSISTOR 2SC4177
Q106	8-729-140-63	s	TRANSISTOR 2SA1611-M5M6
Q107	8-729-028-91	s	TRANSISTOR DTA144EUA-T106
Q108	8-729-029-14	s	TRANSISTOR DTC144EUA-T106
Q109	8-729-117-32	■	TRANSISTOR 2SC4177
Q110	8-729-117-32	■	TRANSISTOR 2SC4177
Q111	8-729-140-63	■	TRANSISTOR 2SA1611-M5M6
Q112	8-729-117-32	s	TRANSISTOR 2SC4177
Q113	8-729-117-32	s	TRANSISTOR 2SC4177
Q114	8-729-903-10	s	TRANSISTOR FMW1
Q115	8-729-902-96	s	TRANSISTOR FMS1
Q116-125	8-729-117-32	s	TRANSISTOR 2SC4177
Q126	8-729-907-26	s	TRANSISTOR IMX1
Q127-133	8-729-117-32	s	TRANSISTOR 2SC4177
Q134	8-729-907-26	s	TRANSISTOR IMX1
Q135-138	8-729-117-32	s	TRANSISTOR 2SC4177
Q200	8-729-140-63	■	TRANSISTOR 2SA1611-M5M6
Q201	8-729-117-32	s	TRANSISTOR 2SC4177
Q202	8-729-117-32	s	TRANSISTOR 2SC4177
Q203	8-729-117-32	■	TRANSISTOR 2SC4177
Q204	8-729-116-64	■	TRANSISTOR 2SK508-K51
Q205	8-729-904-41	s	TRANSISTOR FMY3
Q206	8-729-029-14	s	TRANSISTOR DTC144EUA-T106
Q207	8-729-029-14	■	TRANSISTOR DTC144EUA-T106
Q208	8-729-117-32	s	TRANSISTOR 2SC4177
Q209	8-729-117-32	s	TRANSISTOR 2SC4177
Q210	8-729-117-32	s	TRANSISTOR 2SC4177
Q211	8-729-140-63	s	TRANSISTOR 2SA1611-M5M6
Q212	8-729-117-32	s	TRANSISTOR 2SC4177
Q213	8-729-117-32	s	TRANSISTOR 2SC4177
Q214	8-729-140-63	s	TRANSISTOR 2SA1611-M5M6
Q215	8-729-117-32	s	TRANSISTOR 2SC4177
Q216	8-729-140-63	s	TRANSISTOR 2SA1611-M5M6
Q217	8-729-117-32	s	TRANSISTOR 2SC4177
Q218	8-729-117-32	s	TRANSISTOR 2SC4177
Q219	8-729-117-32	s	TRANSISTOR 2SC4177
Q220	8-729-140-63	s	TRANSISTOR 2SA1611-M5M6
Q221-225	8-729-117-32	s	TRANSISTOR 2SC4177

(AD-115 BOARD(ES-7(UC/J)))

Ref. No. or Q'ty	Part No.	SP	Description
Q226-229	8-729-140-63	■	TRANSISTOR 2SA1611-M5M6
Q230	8-729-117-32	■	TRANSISTOR 2SC4177
Q231	8-729-117-32	■	TRANSISTOR 2SC4177
Q232	8-729-117-32	■	TRANSISTOR 2SC4177
Q233	8-729-029-14	s	TRANSISTOR DTC144EUA-T106
Q300	8-729-117-32	s	TRANSISTOR 2SC4177
Q301	8-729-117-32	s	TRANSISTOR 2SC4177
Q302	8-729-140-63	■	TRANSISTOR 2SA1611-M5M6
Q303	8-729-117-32	■	TRANSISTOR 2SC4177
Q304	8-729-904-41	s	TRANSISTOR FMY3
Q305	8-729-117-32	s	TRANSISTOR 2SC4177
Q306	8-729-140-63	s	TRANSISTOR 2SA1611-M5M6
Q307	8-729-117-32	■	TRANSISTOR 2SC4177
Q308	8-729-117-32	s	TRANSISTOR 2SC4177
Q309	8-729-140-63	s	TRANSISTOR 2SA1611-M5M6
Q310	8-729-117-32	■	TRANSISTOR 2SC4177
Q311	8-729-117-32	s	TRANSISTOR 2SC4177
Q312	8-729-117-32	s	TRANSISTOR 2SC4177
Q313	8-729-140-63	■	TRANSISTOR 2SA1611-M5M6
Q314	8-729-117-32	■	TRANSISTOR 2SC4177
Q400	8-729-117-32	■	TRANSISTOR 2SC4177
Q401	8-729-117-32	s	TRANSISTOR 2SC4177
Q402	8-729-117-32	s	TRANSISTOR 2SC4177
Q403	8-729-140-63	s	TRANSISTOR 2SA1611-M5M6
Q404	8-729-117-32	■	TRANSISTOR 2SC4177
Q405	8-729-140-63	s	TRANSISTOR 2SA1611-M5M6
Q406	8-729-116-64	s	TRANSISTOR 2SK508-K51
Q407	8-729-117-32	s	TRANSISTOR 2SC4177
Q500	8-729-140-63	s	TRANSISTOR 2SA1611-M5M6
Q501	8-729-117-32	s	TRANSISTOR 2SC4177
Q502	8-729-117-32	■	TRANSISTOR 2SC4177
Q503	8-729-117-32	s	TRANSISTOR 2SC4177
Q504	8-729-116-64	s	TRANSISTOR 2SK508-K51
Q505	8-729-904-41	s	TRANSISTOR FMY3
Q506	8-729-029-14	s	TRANSISTOR DTC144EUA-T106
Q507	8-729-029-14	■	TRANSISTOR DTC144EUA-T106
Q508	8-729-117-32	s	TRANSISTOR 2SC4177
Q509	8-729-117-32	■	TRANSISTOR 2SC4177
Q510	8-729-117-32	s	TRANSISTOR 2SC4177
Q511	8-729-140-63	s	TRANSISTOR 2SA1611-M5M6
Q512	8-729-117-32	s	TRANSISTOR 2SC4177
Q513	8-729-117-32	s	TRANSISTOR 2SC4177
Q514	8-729-140-63	s	TRANSISTOR 2SA1611-M5M6
Q515	8-729-117-32	s	TRANSISTOR 2SC4177
Q516	8-729-140-63	s	TRANSISTOR 2SA1611-M5M6
Q517	8-729-117-32	s	TRANSISTOR 2SC4177
Q518	8-729-117-32	■	TRANSISTOR 2SC4177
Q519	8-729-117-32	■	TRANSISTOR 2SC4177
Q520	8-729-140-63	s	TRANSISTOR 2SA1611-M5M6
Q521-525	8-729-117-32	s	TRANSISTOR 2SC4177
Q526-529	8-729-140-63	s	TRANSISTOR 2SA1611-M5M6
Q530	8-729-117-32	s	TRANSISTOR 2SC4177
Q531	8-729-117-32	■	TRANSISTOR 2SC4177
Q532	8-729-117-32	s	TRANSISTOR 2SC4177
Q533	8-729-029-14	s	TRANSISTOR DTC144EUA-T106
Q600	8-729-117-32	■	TRANSISTOR 2SC4177
Q601	8-729-117-32	s	TRANSISTOR 2SC4177
Q602	8-729-140-63	■	TRANSISTOR 2SA1611-M5M6
Q603	8-729-117-32	s	TRANSISTOR 2SC4177

(AD-115 BOARD(ES-7(UC/J)))

Ref. No. or Q'ty	Part No.	SP	Description
Q604	8-729-904-41	s	TRANSISTOR FMY3
Q605	8-729-117-32	s	TRANSISTOR 2SC4177
Q606	8-729-140-63	s	TRANSISTOR 2SA1611-M5M6
Q607	8-729-117-32	s	TRANSISTOR 2SC4177
Q608	8-729-117-32	s	TRANSISTOR 2SC4177
Q609	8-729-140-63	s	TRANSISTOR 2SA1611-M5M6
Q610	8-729-117-32	s	TRANSISTOR 2SC4177
Q611	8-729-117-32	s	TRANSISTOR 2SC4177
Q612	8-729-117-32	s	TRANSISTOR 2SC4177
Q613	8-729-140-63	s	TRANSISTOR 2SA1611-M5M6
Q614	8-729-117-32	■	TRANSISTOR 2SC4177
Q700	8-729-117-32	■	TRANSISTOR 2SC4177
Q701	8-729-117-32	s	TRANSISTOR 2SC4177
Q702	8-729-117-32	s	TRANSISTOR 2SC4177
Q703	8-729-140-63	s	TRANSISTOR 2SA1611-M5M6
Q704	8-729-117-32	s	TRANSISTOR 2SC4177
Q705	8-729-140-63	s	TRANSISTOR 2SA1611-M5M6
Q706	8-729-116-64	s	TRANSISTOR 2SK508-K51
Q707	8-729-117-32	■	TRANSISTOR 2SC4177
Q800	8-729-117-32	s	TRANSISTOR 2SC4177
R100	1-216-023-00	s	METAL, CHIP 82 5% 1/10W
R101	1-216-013-00	s	METAL, CHIP 33 5% 1/10W
R102	1-216-013-00	s	METAL, CHIP 33 5% 1/10W
R103	1-216-057-00	■	METAL, CHIP 2.2k 5% 1/10W
R104	1-216-013-00	s	METAL, CHIP 33 5% 1/10W
R105	1-216-021-00	s	METAL, CHIP 68 5% 1/10W
R106	1-216-057-00	s	METAL, CHIP 2.2k 5% 1/10W
R107	1-216-021-00	s	METAL, CHIP 68 [illegible] 1/10W
R108	1-216-081-00	s	METAL, CHIP 22k [illegible] 1/10W
R109-114	1-216-624-11	s	METAL, CHIP 75 0.5% 1/10W
R115	1-216-081-00	s	METAL, CHIP 22k 5% 1/10W
R116	1-216-075-00	s	METAL, CHIP 12k 5% 1/10W
R117	1-216-073-00	s	METAL, CHIP 10k 5% 1/10W
R118	1-216-121-91	■	METAL, CHIP 1M 5% 1/10W
R120	1-216-059-00	s	METAL, CHIP 2.7k 5% 1/10W
R121	1-216-059-00	s	METAL, CHIP 2.7k 5% 1/10W
R122	1-216-687-11	■	METAL, CHIP 33k 0.5% 1/10W
R123	1-218-764-11	s	METAL, CHIP 330k 0.5% 1/10W
R124	1-216-073-00	s	METAL, CHIP 10k 5% 1/10W
R125	1-218-772-11	s	METAL, CHIP 680k 0.5% 1/10W
R127	1-216-295-91	s	RES, CHIP 0
R128	1-216-049-91	s	METAL, CHIP 1k [illegible] 1/10W
R129	1-216-033-00	s	METAL, CHIP 220 [illegible] 1/10W
R130	1-216-049-91	s	METAL, CHIP 1k 5% 1/10W
R131-142	1-216-033-00	s	METAL, CHIP 220 5% 1/10W
R143	1-216-049-91	s	METAL, CHIP 1k 5% 1/10W
R144	1-216-073-00	s	METAL, CHIP 10k [illegible] 1/10W
R145	1-216-627-11	s	METAL, CHIP 100 0.5% 1/10W
R146	1-216-649-11	s	METAL, CHIP 820 0.5% 1/10W
R147	1-216-625-11	s	METAL, CHIP 82 0.5% 1/10W
R148	1-216-624-11	■	METAL, CHIP 75 0.5% 1/10W
R149	1-216-624-11	s	METAL, CHIP 75 0.5% 1/10W
R150	1-216-624-11	s	METAL, CHIP 75 0.5% 1/10W
R151-156	1-216-663-11	s	METAL, CHIP 3.3k 0.5% 1/10W
R157	1-216-025-91	s	METAL, CHIP 100 5% 1/10W
R158	1-216-655-11	■	METAL, CHIP 1.5k 0.5% 1/10W
R159	1-216-639-11	s	METAL, CHIP 330 0.5% 1/10W
R160	1-216-603-11	s	METAL, CHIP 10 0.5% 1/10W
R161	1-216-651-11	s	METAL, CHIP 1k 0.5% 1/10W

(AD-115 BOARD(ES-7(UC/J)))

Ref. No. or Q'ty	Part No.	SP	Description
R162	1-216-049-91	s	METAL, CHIP 1k 5% 1/10W
R163	1-216-635-11	s	METAL, CHIP 220 0.5% 1/10W
R164	1-216-049-91	s	METAL, CHIP 1k 5% 1/10W
R165	1-208-625-11	s	METAL, CHIP 2.25k 0.1% 1/10W
R166	1-208-627-11	s	METAL, CHIP 4.41k 0.1% 1/16W
R167	1-208-630-11	s	METAL, CHIP 11.49 0.1% 1/10W
R168	1-216-625-11	s	METAL, CHIP 82 0.5% 1/10W
R169	1-216-049-91	■	METAL, CHIP 1k 5% 1/10W
R170	1-216-025-91	s	METAL, CHIP 100 5% 1/10W
R171	1-216-025-91	s	METAL, CHIP 100 [illegible] 1/10W
R172	1-208-774-11	■	METAL, CHIP 470 0.5% 1/10W
R173	1-216-057-00	s	METAL, CHIP 2.2k 5% 1/10W
R174	1-216-045-00	s	METAL, CHIP 680 5% 1/10W
R175	1-208-774-11	s	METAL, CHIP 470 0.5% 1/10W
R176	1-216-667-11	s	METAL, CHIP 4.7k 0.5% 1/10W
R177	1-216-627-11	s	METAL, CHIP 100 0.5% 1/10W
R178	1-216-651-11	s	METAL, CHIP 1k 0.5% 1/10W
R179	1-216-627-11	s	METAL, CHIP 100 0.5% 1/10W
R180	1-216-655-11	s	METAL, CHIP 1.5k 0.5% 1/10W
R181	1-216-057-00	s	METAL, CHIP 2.2k 5% 1/10W
R182	1-216-649-11	s	METAL, CHIP 820 0.5% 1/10W
R183	1-216-651-11	s	METAL, CHIP 1k 0.5% 1/10W
R184	1-216-057-00	s	METAL, CHIP 2.2k 5% 1/10W
R185	1-216-057-00	s	METAL, CHIP 2.2k 5% 1/10W
R186	1-216-651-11	s	METAL, CHIP 1k 0.5% 1/10W
R187	1-216-627-11	s	METAL, CHIP 100 0.5% 1/10W
R188	1-216-659-11	s	METAL, CHIP 2.2k 0.5% 1/10W
R189	1-216-057-00	s	METAL, CHIP 2.2k 5% 1/10W
R190	1-216-057-00	s	METAL, CHIP 2.2k [illegible] 1/10W
R191	1-216-627-11	s	METAL, CHIP 100 0.5% 1/10W
R192	1-216-659-11	s	METAL, CHIP 2.2k 0.5% 1/10W
R193	1-216-057-00	■	METAL, CHIP 2.2k 5% 1/10W
R194	1-216-057-00	s	METAL, CHIP 2.2k 5% 1/10W
R195	1-216-625-11	s	METAL, CHIP 82 0.5% 1/10W
R196	1-216-624-11	■	METAL, CHIP 75 0.5% 1/10W
R197	1-216-624-11	s	METAL, CHIP 75 0.5% 1/10W
R198	1-216-624-11	s	METAL, CHIP 75 0.5% 1/10W
R199	1-216-033-00	s	METAL, CHIP 220 5% 1/10W
R200	1-216-073-00	■	METAL, CHIP 10k [illegible] 1/10W
R201	1-216-025-91	s	METAL, CHIP 100 5% 1/10W
R202	1-216-049-91	s	METAL, CHIP 1k 5% 1/10W
R203	1-216-651-11	■	METAL, CHIP 1k 0.5% 1/10W
R204	1-208-800-11	s	METAL, CHIP 5.6k 0.5% 1/10W
R205	1-216-651-11	s	METAL, CHIP 1k 0.5% 1/10W
R206	1-216-009-00	s	METAL, CHIP 22 5% 1/10W
R207	1-216-041-00	■	METAL, CHIP 470 5% 1/10W
R208	1-216-673-11	s	METAL, CHIP 8.2k 0.5% 1/10W
R209	1-216-009-00	■	METAL, CHIP 22 5% 1/10W
R210	1-216-659-11	s	METAL, CHIP 2.2k 0.5% 1/10W
R211	1-216-639-11	s	METAL, CHIP 330 0.5% 1/10W
R212	1-216-677-11	s	METAL, CHIP 12k 0.5% 1/10W
R213	1-208-784-11	s	METAL, CHIP 1.2k 0.5% 1/10W
R214	1-216-659-11	s	METAL, CHIP 2.2k 0.5% 1/10W
R215	1-216-667-11	s	METAL, CHIP 4.7k 0.5% 1/10W
R216	1-208-822-11	s	METAL, CHIP 47k 0.5% 1/10W
R217	1-216-033-00	s	METAL, CHIP 220 5% 1/10W
R218	1-216-663-11	s	METAL, CHIP 3.3k 0.5% 1/10W
R219	1-216-687-11	■	METAL, CHIP 33k 0.5% 1/10W
R220	1-208-806-11	s	METAL, CHIP 10k 0.5% 1/10W

(AD-115 BOARD(ES-7(UC/J)))

Ref. No. or Q'ty	Part No.	SP	Description
R221	1-216-077-00	■	METAL, CHIP 15k 5% 1/10W
R222	1-216-651-11	s	METAL, CHIP 1k 0.5% 1/10W
R223	1-216-649-11	s	METAL, CHIP 820 0.5% 1/10W
R224	1-216-667-11	s	METAL, CHIP 4.7k 0.5% 1/10W
R225	1-216-624-11	s	METAL, CHIP 75 0.5% 1/10W
R226	1-216-631-11	s	METAL, CHIP 150 0.5% 1/10W
R227	1-216-025-91	s	METAL, CHIP 100 5% 1/10W
R228	1-208-814-11	s	METAL, CHIP 22k 0.5% 1/10W
R229	1-208-814-11	s	METAL, CHIP 22k 0.5% 1/10W
R230	1-216-025-91	s	METAL, CHIP 100 5% 1/10W
R231	1-216-667-11	s	METAL, CHIP 4.7k 0.5% 1/10W
R232	1-216-121-91	s	METAL, CHIP 1M 5% 1/10W
R233	1-216-637-11	s	METAL, CHIP 270 0.5% 1/10W
R234	1-216-671-11	s	METAL, CHIP 6.8k 0.5% 1/10W
R235	1-216-663-11	s	METAL, CHIP 3.3k 0.5% 1/10W
R236	1-216-657-11	s	METAL, CHIP 1.8k 0.5% 1/10W
R237	1-208-806-11	s	METAL, CHIP 10k 0.5% 1/10W
R238	1-216-667-11	s	METAL, CHIP 4.7k 0.5% 1/10W
R239	1-216-663-11	s	METAL, CHIP 3.3k 0.5% 1/10W
R240	1-216-667-11	s	METAL, CHIP 4.7k 0.5% 1/10W
R241	1-216-671-11	s	METAL, CHIP 6.8k 0.5% 1/10W
R242	1-216-033-00	■	METAL, CHIP 220 5% 1/10W
R243	1-216-033-00	s	METAL, CHIP 220 5% 1/10W
R244	1-216-065-00	s	METAL, CHIP 4.7k [illegible] 1/10W
R245	1-216-651-11	s	METAL, CHIP 1k 0.5% 1/10W
R246	1-216-651-11	■	METAL, CHIP 1k 0.5% 1/10W
R247	1-208-800-11	s	METAL, CHIP 5.6k 0.5% 1/10W
R248	1-208-800-11	s	METAL, CHIP 5.6k 0.5% 1/10W
R249	1-216-017-91	s	METAL, CHIP 47 5% 1/10W
R250	1-216-651-11	s	METAL, CHIP 1k 0.5% 1/10W
R251	1-216-017-91	■	METAL, CHIP 47 5% 1/10W
R252	1-216-651-11	■	METAL, CHIP 1k 0.5% 1/10W
R253	1-216-057-00	s	METAL, CHIP 2.2k 5% 1/10W
R254	1-216-057-00	s	METAL, CHIP 2.2k 5% 1/10W
R255	1-216-017-91	s	METAL, CHIP 47 5% 1/10W
R256	1-216-073-00	s	METAL, CHIP 10k 5% 1/10W
R257	1-216-057-00	■	METAL, CHIP 2.2k 5% 1/10W
R258	1-216-065-00	s	METAL, CHIP 4.7k 5% 1/10W
R259	1-216-025-91	■	METAL, CHIP 100 5% 1/10W
R260	1-216-651-11	s	METAL, CHIP 1k 0.5% 1/10W
R261	1-216-671-11	s	METAL, CHIP 6.8k 0.5% 1/10W
R263	1-216-651-11	s	METAL, CHIP 1k 0.5% 1/10W
R264	1-216-057-00	s	METAL, CHIP 2.2k [illegible] 1/10W
R265	1-216-021-00	s	METAL, CHIP 68 5% 1/10W
R267	1-208-774-11	s	METAL, CHIP 470 0.5% 1/10W
R269	1-216-642-11	s	METAL, CHIP 430 0.5% 1/10W
R270	1-208-774-11	■	METAL, CHIP 470 0.5% 1/10W
R271	1-216-651-11	s	METAL, CHIP 1k 0.5% 1/10W
R272	1-216-033-00	s	METAL, CHIP 220 5% 1/10W
R273	1-216-627-11	s	METAL, CHIP 100 0.5% 1/10W
R274	1-216-009-00	■	METAL, CHIP 22 5% 1/10W
R276	1-216-021-00	s	METAL, CHIP 68 5% 1/10W
R277	1-216-065-00	s	METAL, CHIP 4.7k 5% 1/10W
R278	1-216-651-11	s	METAL, CHIP 1k 0.5% 1/10W
R279	1-216-073-00	s	METAL, CHIP 10k 5% 1/10W
R280	1-216-650-11	s	METAL, CHIP 910 0.5% 1/10W
R281	1-216-651-11	s	METAL, CHIP 1k 0.5% 1/10W
R282	1-216-025-91	■	METAL, CHIP 100 5% 1/10W
R283	1-208-806-11	■	METAL, CHIP 10k 0.5% 1/10W

(AD-115 BOARD(ES-7(UC/J)))

Ref. No. or Q'ty	Part No.	SP	Description
R284	1-216-081-00	■	METAL, CHIP 22k 5% 1/10W
R285	1-216-083-00	s	METAL, CHIP 27k 5% 1/10W
R286	1-216-045-00	■	METAL, CHIP 680 [illegible] 1/10W
R287	1-216-659-11	s	METAL, CHIP 2.2k 0.5% 1/10W
R288	1-216-651-11	s	METAL, CHIP 1k 0.5% 1/10W
R289	1-216-663-11	s	METAL, CHIP 3.3k 0.5% 1/10W
R290	1-216-057-00	s	METAL, CHIP 2.2k 5% 1/10W
R291	1-216-699-11	s	METAL, CHIP 100k 0.5% 1/10W
R292	1-208-812-11	s	METAL, CHIP 18k 0.5% 1/10W
R293	1-216-073-00	s	METAL, CHIP 10k 5% 1/10W
R294	1-216-651-11	■	METAL, CHIP 1k 0.5% 1/10W
R295	1-216-049-91	s	METAL, CHIP 1k 5% 1/10W
R296	1-216-699-11	s	METAL, CHIP 100k 0.5% 1/10W
R297	1-216-057-00	s	METAL, CHIP 2.2k 5% 1/10W
R298	1-216-697-91	s	METAL, CHIP 82k 0.5% 1/10W
R299	1-216-635-11	s	METAL, CHIP 220 0.5% 1/10W
R300	1-216-073-00	s	METAL, CHIP 10k 5% 1/10W
R301	1-216-025-91	s	METAL, CHIP 100 5% 1/10W
R302	1-216-647-11	s	METAL, CHIP 680 0.5% 1/10W
R303	1-216-635-11	s	METAL, CHIP 220 0.5% 1/10W
R304	1-216-049-91	s	METAL, CHIP 1k 5% 1/10W
R305	1-216-603-11	■	METAL, CHIP 10 0.5% 1/10W
R306	1-216-627-11	■	METAL, CHIP 100 0.5% 1/10W
R307	1-216-659-11	s	METAL, CHIP 2.2k 0.5% 1/10W
R308	1-216-049-91	s	METAL, CHIP 1k 5% 1/10W
R309	1-216-639-11	s	METAL, CHIP 330 0.5% 1/10W
R310	1-216-025-91	s	METAL, CHIP 100 5% 1/10W
R311	1-216-639-11	s	METAL, CHIP 330 0.5% 1/10W
R312	1-216-057-00	s	METAL, CHIP 2.2k 5% 1/10W
R313	1-216-073-00	s	METAL, CHIP 10k 5% 1/10W
R314	1-216-049-91	s	METAL, CHIP 1k 5% 1/10W
R315	1-216-650-11	s	METAL, CHIP 910 0.5% 1/10W
R316	1-216-659-11	s	METAL, CHIP 2.2k 0.5% 1/10W
R317	1-216-033-00	s	METAL, CHIP 220 5% 1/10W
R318	1-216-077-00	s	METAL, CHIP 15k 5% 1/10W
R319	1-216-017-91	s	METAL, CHIP 47 5% 1/10W
R320	1-216-057-00	■	METAL, CHIP 2.2k 5% 1/10W
R321	1-216-033-00	s	METAL, CHIP 220 5% 1/10W
R323	1-216-651-11	s	METAL, CHIP 1k 0.5% 1/10W
R324	1-216-648-11	s	METAL, CHIP 750 0.5% 1/10W
R325	1-216-021-00	s	METAL, CHIP 68 5% 1/10W
R326	1-216-021-00	s	METAL, CHIP 68 [illegible] 1/10W
R327	1-216-081-00	s	METAL, CHIP 22k 5% 1/10W
R328	1-216-081-00	s	METAL, CHIP 22k 5% 1/10W
R329	1-216-073-00	s	METAL, CHIP 10k 5% 1/10W
R330	1-216-025-91	s	METAL, CHIP 100 [illegible] 1/10W
R331	1-216-647-11	s	METAL, CHIP 680 0.5% 1/10W
R332	1-216-651-11	s	METAL, CHIP 1k 0.5% 1/10W
R333	1-216-639-11	s	METAL, CHIP 330 0.5% 1/10W
R334	1-208-814-11	s	METAL, CHIP 22k 0.5% 1/10W
R335	1-216-057-00	s	METAL, CHIP 2.2k 5% 1/10W
R336	1-216-049-91	■	METAL, CHIP 1k 5% 1/10W
R337	1-208-814-11	s	METAL, CHIP 22k 0.5% 1/10W
R338	1-216-639-11	s	METAL, CHIP 330 0.5% 1/10W
R339	1-216-639-11	s	METAL, CHIP 330 0.5% 1/10W
R340	1-216-057-00	s	METAL, CHIP 2.2k 5% 1/10W
R341	1-216-073-00	s	METAL, CHIP 10k 5% 1/10W
R342	1-216-049-91	■	METAL, CHIP 1k 5% 1/10W
R343	1-216-650-11	s	METAL, CHIP 910 0.5% 1/10W

(AD-115 BOARD(ES-7(UC/J)))

Ref. No. or Q'ty	Part No.	SP	Description
R344	1-208-784-11	s	METAL, CHIP 1.2k 0.5% 1/10W
R345	1-216-073-00	s	METAL, CHIP 10k 5% 1/10W
R346	1-216-647-11	■	METAL, CHIP 680 0.5% 1/10W
R347	1-216-651-11	■	METAL, CHIP 1k 0.5% 1/10W
R348	1-216-639-11	s	METAL, CHIP 330 0.5% 1/10W
R349	1-208-814-11	s	METAL, CHIP 22k 0.5% 1/10W
R350	1-216-057-00	s	METAL, CHIP 2.2k 5% 1/10W
R351	1-216-049-91	■	METAL, CHIP 1k 5% 1/10W
R352	1-208-814-11	s	METAL, CHIP 22k 0.5% 1/10W
R353	1-216-639-11	s	METAL, CHIP 330 0.5% 1/10W
R354	1-216-639-11	s	METAL, CHIP 330 0.5% 1/10W
R355	1-216-057-00	s	METAL, CHIP 2.2k 5% 1/10W
R356	1-216-073-00	s	METAL, CHIP 10k 5% 1/10W
R357	1-216-049-91	s	METAL, CHIP 1k 5% 1/10W
R358	1-216-650-11	s	METAL, CHIP 910 0.5% 1/10W
R359	1-208-784-11	s	METAL, CHIP 1.2k 0.5% 1/10W
R360	1-216-021-00	s	METAL, CHIP 68 5% 1/10W
R361	1-216-021-00	s	METAL, CHIP 68 5% 1/10W
R362	1-216-021-00	s	METAL, CHIP 68 5% 1/10W
R363	1-216-295-91	s	RES, CHIP 0
R364	1-216-295-91	s	RES, CHIP 0
R365	1-216-295-91	s	RES, CHIP 0
R366	1-216-051-00	s	METAL, CHIP 1.2k 5% 1/10W
R367	1-216-051-00	s	METAL, CHIP 1.2k 5% 1/10W
R368	1-216-025-91	s	METAL, CHIP 100 5% 1/10W
R369	1-216-051-00	s	METAL, CHIP 1.2k 5% 1/10W
R370	1-216-025-91	s	METAL, CHIP 100 5% 1/10W
R371	1-216-647-11	s	METAL, CHIP 680 0.5% 1/10W
R372	1-216-659-11	s	METAL, CHIP 2.2k 0.5% 1/10W
R373	1-208-800-11	s	METAL, CHIP 5.6k 0.5% 1/10W
R400	1-216-699-11	s	METAL, CHIP 100k 0.5% 1/10W
R401	1-216-663-11	s	METAL, CHIP 3.3k 0.5% 1/10W
R402	1-216-663-11	s	METAL, CHIP 3.3k 0.5% 1/10W
R403	1-208-806-11	s	METAL, CHIP 10k 0.5% 1/10W
R404	1-208-774-11	■	METAL, CHIP 470 0.5% 1/10W
R405	1-208-806-11	s	METAL, CHIP 10k 0.5% 1/10W
R406	1-216-651-11	s	METAL, CHIP 1k 0.5% 1/10W
R407	1-216-699-11	■	METAL, CHIP 100k 0.5% 1/10W
R408	1-208-806-11	s	METAL, CHIP 10k 0.5% 1/10W
R409	1-216-659-11	■	METAL, CHIP 2.2k 0.5% 1/10W
R410	1-216-657-11	s	METAL, CHIP 1.8k 0.5% 1/10W
R411	1-216-659-11	s	METAL, CHIP 2.2k 0.5% 1/10W
R412	1-216-627-11	s	METAL, CHIP 100 0.5% 1/10W
R413	1-216-021-00	s	METAL, CHIP 68 5% 1/10W
R414	1-216-085-00	s	METAL, CHIP 33k 5% 1/10W
R415	1-218-772-11	s	METAL, CHIP 680k 0.5% 1/10W
R416	1-216-057-00	s	METAL, CHIP 2.2k 5% 1/10W
R417	1-216-687-11	s	METAL, CHIP 33k 0.5% 1/10W
R418	1-216-667-11	s	METAL, CHIP 4.7k 0.5% 1/10W
R419	1-216-689-11	s	METAL, CHIP 39k 0.5% 1/10W
R420	1-208-806-11	s	METAL, CHIP 10k 0.5% 1/10W
R422	1-216-295-91	s	RES, CHIP 0
R423	1-208-800-11	■	METAL, CHIP 5.6k 0.5% 1/10W
R424	1-208-814-11	s	METAL, CHIP 22k 0.5% 1/10W
R425	1-216-651-11	s	METAL, CHIP 1k 0.5% 1/10W
R427	1-216-651-11	■	METAL, CHIP 1k 0.5% 1/10W
R429	1-216-667-11	s	METAL, CHIP 4.7k 0.5% 1/10W
R430	1-208-806-11	s	METAL, CHIP 10k 0.5% 1/10W
R431	1-216-663-11	s	METAL, CHIP 3.3k 0.5% 1/10W

(AD-115 BOARD(ES-7(UC/J)))

Ref. No. or Q'ty	Part No.	SP	Description
R432	1-216-659-11	s	METAL, CHIP 2.2k 0.5% 1/10W
R433	1-216-659-11	s	METAL, CHIP 2.2k 0.5% 1/10W
R434	1-216-659-11	s	METAL, CHIP 2.2k 0.5% 1/10W
R435	1-216-663-11	■	METAL, CHIP 3.3k 0.5% 1/10W
R436	1-216-667-11	s	METAL, CHIP 4.7k 0.5% 1/10W
R437	1-218-756-11	s	METAL, CHIP 150k 0.5% 1/10W
R438	1-216-663-11	s	METAL, CHIP 3.3k 0.5% 1/10W
R439	1-208-810-11	s	METAL, CHIP 15k 0.5% 1/10W
R440	1-208-810-11	s	METAL, CHIP 15k 0.5% 1/10W
R441	1-216-659-11	s	METAL, CHIP 2.2k 0.5% 1/10W
R442	1-218-754-11	s	METAL, CHIP 120k 0.5% 1/10W
R443	1-216-001-00	s	METAL, CHIP 10 5% 1/10W
R444	1-218-760-11	s	METAL, CHIP 220k 0.5% 1/10W
R445	1-216-671-11	■	METAL, CHIP 6.8k 0.5% 1/10W
R446	1-208-814-11	s	METAL, CHIP 22k 0.5% 1/10W
R447	1-208-806-11	s	METAL, CHIP 10k 0.5% 1/10W
R448	1-216-667-11	s	METAL, CHIP 4.7k 0.5% 1/10W
R449	1-216-699-11	s	METAL, CHIP 100k 0.5% 1/10W
R450	1-216-635-11	s	METAL, CHIP 220 0.5% 1/10W
R451	1-208-814-11	s	METAL, CHIP 22k 0.5% 1/10W
R452	1-216-697-91	■	METAL, CHIP 82k 0.5% 1/10W
R453	1-208-814-11	s	METAL, CHIP 22k 0.5% 1/10W
R454	1-216-635-11	■	METAL, CHIP 220 0.5% 1/10W
R455	1-216-651-11	s	METAL, CHIP 1k 0.5% 1/10W
R456	1-218-760-11	s	METAL, CHIP 220k 0.5% 1/10W
R457	1-216-671-11	■	METAL, CHIP 6.8k 0.5% 1/10W
R458	1-216-001-00	s	METAL, CHIP 10 5% 1/10W
R460	1-216-001-00	s	METAL, CHIP 10 5% 1/10W
R461	1-216-001-00	s	METAL, CHIP 10 5% 1/10W
R463	1-216-033-00	■	METAL, CHIP 220 5% 1/10W
R500	1-216-073-00	■	METAL, CHIP 10k 5% 1/10W
R501	1-216-025-91	s	METAL, CHIP 100 5% 1/10W
R502	1-216-049-91	■	METAL, CHIP 1k ■ 1/10W
R503	1-216-651-11	■	METAL, CHIP 1k 0.5% 1/10W
R504	1-208-800-11	■	METAL, CHIP 5.6k 0.5% 1/10W
R505	1-216-651-11	s	METAL, CHIP 1k 0.5% 1/10W
R506	1-216-009-00	s	METAL, CHIP 22 5% 1/10W
R507	1-216-041-00	■	METAL, CHIP 470 5% 1/10W
R508	1-216-673-11	s	METAL, CHIP 8.2k 0.5% 1/10W
R509	1-216-009-00	■	METAL, CHIP 22 5% 1/10W
R510	1-216-659-11	s	METAL, CHIP 2.2k 0.5% 1/10W
R511	1-216-639-11	■	METAL, CHIP 330 0.5% 1/10W
R512	1-216-677-11	s	METAL, CHIP 12k 0.5% 1/10W
R513	1-208-784-11	s	METAL, CHIP 1.2k 0.5% 1/10W
R514	1-216-659-11	s	METAL, CHIP 2.2k 0.5% 1/10W
R515	1-216-667-11	s	METAL, CHIP 4.7k 0.5% 1/10W
R516	1-208-822-11	s	METAL, CHIP 47k 0.5% 1/10W
R517	1-216-033-00	s	METAL, CHIP 220 5% 1/10W
R518	1-216-663-11	s	METAL, CHIP 3.3k 0.5% 1/10W
R519	1-216-687-11	s	METAL, CHIP 33k 0.5% 1/10W
R520	1-208-806-11	s	METAL, CHIP 10k 0.5% 1/10W
R521	1-216-077-00	s	METAL, CHIP 15k ■ 1/10W
R522	1-216-651-11	s	METAL, CHIP 1k 0.5% 1/10W
R523	1-216-649-11	s	METAL, CHIP 820 0.5% 1/10W
R524	1-216-667-11	s	METAL, CHIP 4.7k 0.5% 1/10W
R525	1-216-624-11	■	METAL, CHIP 75 0.5% 1/10W
R526	1-216-631-11	s	METAL, CHIP 150 0.5% 1/10W
R527	1-216-025-91	s	METAL, CHIP 100 5% 1/10W
R528	1-208-814-11	s	METAL, CHIP 22k 0.5% 1/10W

(AD-115 BOARD(ES-7 (UC/J)))

Ref. No. or Q'ty	Part No.	SP	Description
R529	1-208-814-11	s	METAL, CHIP 22k 0.5% 1/10W
R530	1-216-025-91	s	METAL, CHIP 100 5% 1/10W
R531	1-216-667-11	■	METAL, CHIP 4.7k 0.5% 1/10W
R532	1-216-121-91	s	METAL, CHIP 1M 5% 1/10W
R533	1-216-637-11	s	METAL, CHIP 270 0.5% 1/10W
R534	1-216-671-11	s	METAL, CHIP 6.8k 0.5% 1/10W
R535	1-216-663-11	s	METAL, CHIP 3.3k 0.5% 1/10W
R536	1-216-657-11	s	METAL, CHIP 1.8k 0.5% 1/10W
R537	1-208-806-11	■	METAL, CHIP 10k 0.5% 1/10W
R538	1-216-667-11	s	METAL, CHIP 4.7k 0.5% 1/10W
R539	1-216-663-11	s	METAL, CHIP 3.3k 0.5% 1/10W
R540	1-216-667-11	s	METAL, CHIP 4.7k 0.5% 1/10W
R541	1-216-671-11	s	METAL, CHIP 6.8k 0.5% 1/10W
R542	1-216-033-00	s	METAL, CHIP 220 5% 1/10W
R543	1-216-033-00	■	METAL, CHIP 220 5% 1/10W
R544	1-216-065-00	s	METAL, CHIP 4.7k 5% 1/10W
R545	1-216-651-11	■	METAL, CHIP 1k 0.5% 1/10W
R546	1-216-651-11	s	METAL, CHIP 1k 0.5% 1/10W
R547	1-208-800-11	s	METAL, CHIP 5.6k 0.5% 1/10W
R548	1-208-800-11	s	METAL, CHIP 5.6k 0.5% 1/10W
R549	1-216-017-91	s	METAL, CHIP 47 5% 1/10W
R550	1-216-651-11	s	METAL, CHIP 1k 0.5% 1/10W
R551	1-216-619-11	s	METAL, CHIP 47 0.5% 1/10W
R552	1-216-651-11	s	METAL, CHIP 1k 0.5% 1/10W
R553	1-216-057-00	s	METAL, CHIP 2.2k 5% 1/10W
R554	1-216-057-00	s	METAL, CHIP 2.2k 5% 1/10W
R555	1-216-017-91	s	METAL, CHIP 47 5% 1/10W
R556	1-216-073-00	s	METAL, CHIP 10k 5% 1/10W
R557	1-216-057-00	■	METAL, CHIP 2.2k 5% 1/10W
R558	1-216-065-00	s	METAL, CHIP 4.7k 5% 1/10W
R559	1-216-025-91	s	METAL, CHIP 100 5% 1/10W
R560	1-216-651-11	s	METAL, CHIP 1k 0.5% 1/10W
R561	1-216-671-11	s	METAL, CHIP 6.8k 0.5% 1/10W
R563	1-216-651-11	s	METAL, CHIP 1k 0.5% 1/10W
R564	1-216-057-00	s	METAL, CHIP 2.2k 5% 1/10W
R565	1-216-021-00	s	METAL, CHIP [illegible] 5% 1/10W
R567	1-208-774-11	s	METAL, CHIP 470 0.5% 1/10W
R569	1-216-642-11	s	METAL, CHIP 430 0.5% 1/10W
R570	1-208-774-11	s	METAL, CHIP 470 0.5% 1/10W
R571	1-216-651-11	s	METAL, CHIP 1k 0.5% 1/10W
R572	1-216-647-11	s	METAL, CHIP 680 0.5% 1/10W
R573	1-216-635-11	s	METAL, CHIP 220 0.5% 1/10W
R574	1-216-627-11	s	METAL, CHIP 100 0.5% 1/10W
R575	1-216-009-00	s	METAL, CHIP 22 5% 1/10W
R577	1-216-021-00	s	METAL, CHIP 68 5% 1/10W
R578	1-216-065-00	s	METAL, CHIP 4.7k 5% 1/10W
R579	1-216-073-00	s	METAL, CHIP 10k 5% 1/10W
R580	1-216-651-11	s	METAL, CHIP 1k 0.5% 1/10W
R581	1-216-650-11	s	METAL, CHIP 910 0.5% 1/10W
R582	1-216-651-11	s	METAL, CHIP 1k 0.5% 1/10W
R583	1-216-025-91	s	METAL, CHIP 100 5% 1/10W
R584	1-208-806-11	s	METAL, CHIP 10k 0.5% 1/10W
R585	1-216-081-00	s	METAL, CHIP 22k 5% 1/10W
R586	1-216-083-00	s	METAL, CHIP 27k 5% 1/10W
R587	1-216-045-00	s	METAL, CHIP 680 5% 1/10W
R588	1-216-659-11	s	METAL, CHIP 2.2k 0.5% 1/10W
R589	1-216-651-11	s	METAL, CHIP 1k 0.5% 1/10W
R590	1-216-663-11	s	METAL, CHIP 3.3k 0.5% 1/10W
R591	1-216-057-00	s	METAL, CHIP 2.2k 5% 1/10W

(AD-115 BOARD(ES-7(UC/J)))

Ref. No. or Q'ty	Part No.	SP	Description
R592	1-216-699-11	s	METAL, CHIP 100k 0.5% 1/10W
R593	1-208-812-11	s	METAL, CHIP 18k 0.5% 1/10W
R594	1-216-073-00	s	METAL, CHIP 10k 5% 1/10W
R595	1-216-651-11	s	METAL, CHIP 1k 0.5% 1/10W
R596	1-216-049-91	s	METAL, CHIP 1k 5% 1/10W
R597	1-216-699-11	s	METAL, CHIP 100k 0.5% 1/10W
R598	1-216-057-00	■	METAL, CHIP 2.2k 5% 1/10W
R599	1-216-697-91	■	METAL, CHIP 82k 0.5% 1/10W
R600	1-216-073-00	■	METAL, CHIP 10k 5% 1/10W
R601	1-216-025-91	■	METAL, CHIP 100 [illegible] 1/10W
R602	1-216-647-11	s	METAL, CHIP 680 0.5% 1/10W
R603	1-216-635-11	■	METAL, CHIP 220 0.5% 1/10W
R604	1-216-049-91	■	METAL, CHIP 1k [illegible] 1/10W
R605	1-216-603-11	s	METAL, CHIP 10 0.5% 1/10W
R606	1-216-627-11	■	METAL, CHIP 100 0.5% 1/10W
R607	1-216-659-11	s	METAL, CHIP 2.2k 0.5% 1/10W
R608	1-216-049-91	s	METAL, CHIP 1k [illegible] 1/10W
R609	1-216-639-11	■	METAL, CHIP 330 0.5% 1/10W
R610	1-216-025-91	s	METAL, CHIP 100 5% 1/10W
R611	1-216-639-11	■	METAL, CHIP 330 0.5% 1/10W
R612	1-216-057-00	s	METAL, CHIP 2.2k 5% 1/10W
R613	1-216-073-00	s	METAL, CHIP 10k 5% 1/10W
R614	1-216-049-91	s	METAL, CHIP 1k [illegible] 1/10W
R615	1-216-650-11	s	METAL, CHIP 910 0.5% 1/10W
R616	1-216-659-11	s	METAL, CHIP 2.2k 0.5% 1/10W
R617	1-216-033-00	s	METAL, CHIP 220 5% 1/10W
R618	1-216-077-00	■	METAL, CHIP 15k 5% 1/10W
R619	1-216-017-91	s	METAL, CHIP 47 5% 1/10W
R620	1-216-057-00	s	METAL, CHIP 2.2k 5% 1/10W
R621	1-216-033-00	■	METAL, CHIP 220 5% 1/10W
R623	1-216-651-11	s	METAL, CHIP 1k 0.5% 1/10W
R624	1-216-648-11	s	METAL, CHIP 750 0.5% 1/10W
R625	1-216-021-00	■	METAL, CHIP [illegible] 5% 1/10W
R626	1-216-021-00	s	METAL, CHIP 68 5% 1/10W
R627	1-216-081-00	■	METAL, CHIP 22k 5% 1/10W
R628	1-216-081-00	s	METAL, CHIP 22k 5% 1/10W
R629	1-216-073-00	s	METAL, CHIP 10k 5% 1/10W
R630	1-216-025-91	s	METAL, CHIP 100 5% 1/10W
R631	1-216-647-11	s	METAL, CHIP 680 0.5% 1/10W
R632	1-216-651-11	s	METAL, CHIP 1k 0.5% 1/10W
R633	1-216-639-11	s	METAL, CHIP 330 0.5% 1/10W
R634	1-208-814-11	s	METAL, CHIP 22k 0.5% 1/10W
R635	1-216-057-00	s	METAL, CHIP 2.2k [illegible] 1/10W
R636	1-216-049-91	s	METAL, CHIP 1k 5% 1/10W
R637	1-208-814-11	s	METAL, CHIP 22k 0.5% 1/10W
R638	1-216-639-11	s	METAL, CHIP 330 0.5% 1/10W
R639	1-216-639-11	s	METAL, CHIP 330 0.5% 1/10W
R640	1-216-057-00	s	METAL, CHIP 2.2k 5% 1/10W
R641	1-216-073-00	s	METAL, CHIP 10k 5% 1/10W
R642	1-216-049-91	s	METAL, CHIP 1k 5% 1/10W
R643	1-216-650-11	s	METAL, CHIP 910 0.5% 1/10W
R644	1-208-784-11	s	METAL, CHIP 1.2k 0.5% 1/10W
R645	1-216-073-00	s	METAL, CHIP 10k 5% 1/10W
R646	1-216-647-11	s	METAL, CHIP 680 0.5% 1/10W
R647	1-216-651-11	s	METAL, CHIP 1k 0.5% 1/10W
R648	1-216-639-11	s	METAL, CHIP 330 0.5% 1/10W
R649	1-208-814-11	s	METAL, CHIP 22k 0.5% 1/10W
R650	1-216-057-00	s	METAL, CHIP 2.2k 5% 1/10W
R651	1-216-049-91	■	METAL, CHIP 1k 5% 1/10W

(AD-115 BOARD(ES-7(UC/J)))

Ref. No. or Q'ty	Part No.	SP	Description
R652	1-208-814-11	s	METAL, CHIP 22k 0.5% 1/10W
R653	1-216-639-11	■	METAL, CHIP 330 0.5% 1/10W
R654	1-216-639-11	s	METAL, CHIP 330 0.5% 1/10W
R655	1-216-057-00	s	METAL, CHIP 2.2k 5% 1/10W
R656	1-216-073-00	s	METAL, CHIP 10k 5% 1/10W
R657	1-216-049-91	s	METAL, CHIP 1k 5% 1/10W
R658	1-216-650-11	s	METAL, CHIP 910 0.5% 1/10W
R659	1-208-784-11	s	METAL, CHIP 1.2k 0.5% 1/10W
R660	1-216-021-00	■	METAL, CHIP 68 5% 1/10W
R661	1-216-021-00	s	METAL, CHIP 68 5% 1/10W
R662	1-216-021-00	s	METAL, CHIP 68 [illegible] 1/10W
R663	1-216-295-91	s	RES, CHIP 0
R664	1-216-295-91	s	RES, CHIP 0
R665	1-216-295-91	s	RES, CHIP 0
R666	1-216-051-00	s	METAL, CHIP 1.2k 5% 1/10W
R667	1-216-051-00	s	METAL, CHIP 1.2k 5% 1/10W
R668	1-216-025-91	s	METAL, CHIP 100 5% 1/10W
R669	1-216-051-00	s	METAL, CHIP 1.2k 5% 1/10W
R670	1-216-025-91	s	METAL, CHIP 100 5% 1/10W
R671	1-216-647-11	s	METAL, CHIP 680 0.5% 1/10W
R672	1-216-659-11	s	METAL, CHIP 2.2k 0.5% 1/10W
R673	1-208-800-11	s	METAL, CHIP 5.6k 0.5% 1/10W
R703	1-208-806-11	s	METAL, CHIP 10k 0.5% 1/10W
R704	1-208-774-11	s	METAL, CHIP 470 0.5% 1/10W
R705	1-208-806-11	s	METAL, CHIP 10k 0.5% 1/10W
R706	1-216-651-11	■	METAL, CHIP 1k 0.5% 1/10W
R707	1-216-699-11	s	METAL, CHIP 100k 0.5% 1/10W
R708	1-208-806-11	■	METAL, CHIP 10k 0.5% 1/10W
R709	1-216-659-11	■	METAL, CHIP 2.2k 0.5% 1/10W
R710	1-216-657-11	■	METAL, CHIP 1.8k 0.5% 1/10W
R711	1-216-659-11	s	METAL, CHIP 2.2k 0.5% 1/10W
R712	1-216-627-11	s	METAL, CHIP 100 0.5% 1/10W
R713	1-216-021-00	s	METAL, CHIP 68 5% 1/10W
R714	1-216-085-00	s	METAL, CHIP 33k 5% 1/10W
R715	1-218-772-11	s	METAL, CHIP 680k 0.5% 1/10W
R716	1-216-057-00	s	METAL, CHIP 2.2k 5% 1/10W
R717	1-216-687-11	s	METAL, CHIP 33k 0.5% 1/10W
R718	1-216-667-11	s	METAL, CHIP 4.7k 0.5% 1/10W
R719	1-216-689-11	s	METAL, CHIP 39k 0.5% 1/10W
R720	1-208-806-11	■	METAL, CHIP 10k 0.5% 1/10W
R722	1-216-295-91	s	RES, CHIP 0
R723	1-208-800-11	s	METAL, CHIP 5.6k 0.5% 1/10W
R724	1-208-814-11	s	METAL, CHIP 22k 0.5% 1/10W
R725	1-216-651-11	s	METAL, CHIP 1k 0.5% 1/10W
R727	1-216-651-11	s	METAL, CHIP 1k 0.5% 1/10W
R729	1-216-667-11	s	METAL, CHIP 4.7k 0.5% 1/10W
R730	1-208-806-11	s	METAL, CHIP 10k 0.5% 1/10W
R731	1-216-663-11	s	METAL, CHIP 3.3k 0.5% 1/10W
R732	1-216-659-11	s	METAL, CHIP 2.2k 0.5% 1/10W
R733	1-216-659-11	s	METAL, CHIP 2.2k 0.5% 1/10W
R734	1-216-659-11	s	METAL, CHIP 2.2k 0.5% 1/10W
R735	1-216-663-11	s	METAL, CHIP 3.3k 0.5% 1/10W
R736	1-216-667-11	s	METAL, CHIP 4.7k 0.5% 1/10W
R737	1-218-756-11	s	METAL, CHIP 150k 0.5% 1/10W
R738	1-216-663-11	s	METAL, CHIP 3.3k 0.5% 1/10W
R739	1-208-810-11	s	METAL, CHIP 15k 0.5% 1/10W
R740	1-208-810-11	■	METAL, CHIP 15k 0.5% 1/10W
R741	1-216-659-11	s	METAL, CHIP 2.2k 0.5% 1/10W
R742	1-218-754-11	s	METAL, CHIP 120k 0.5% 1/10W

(AD-115 BOARD(ES-7(UC/J)))

Ref. No. or Q'ty	Part No.	SP	Description
R743	1-216-001-00	■	METAL, CHIP 10 5% 1/10W
R744	1-218-760-11	s	METAL, CHIP 220k 0.5% 1/10W
R745	1-216-671-11	s	METAL, CHIP 6.8k 0.5% 1/10W
R746	1-208-814-11	s	METAL, CHIP 22k 0.5% 1/10W
R747	1-208-806-11	s	METAL, CHIP 10k 0.5% 1/10W
R748	1-216-667-11	s	METAL, CHIP 4.7k 0.5% 1/10W
R749	1-216-699-11	■	METAL, CHIP 100k 0.5% 1/10W
R750	1-216-635-11	s	METAL, CHIP 220 0.5% 1/10W
R751	1-208-814-11	s	METAL, CHIP 22k 0.5% 1/10W
R752	1-216-697-91	s	METAL, CHIP 82k 0.5% 1/10W
R753	1-208-814-11	s	METAL, CHIP 22k 0.5% 1/10W
R754	1-216-635-11	s	METAL, CHIP 220 0.5% 1/10W
R755	1-216-651-11	s	METAL, CHIP 1k 0.5% 1/10W
R756	1-218-760-11	■	METAL, CHIP 220k 0.5% 1/10W
R757	1-216-671-11	s	METAL, CHIP 6.8k 0.5% 1/10W
R758	1-216-001-00	■	METAL, CHIP 10 5% 1/10W
R760	1-216-001-00	s	METAL, CHIP 10 5% 1/10W
R761	1-216-001-00	s	METAL, CHIP 10 5% 1/10W
R763	1-216-033-00	s	METAL, CHIP 220 5% 1/10W
R801	1-216-081-00	s	METAL, CHIP 22k 5% 1/10W
R802	1-216-081-00	s	METAL, CHIP 22k 5% 1/10W
R803	1-216-057-00	s	METAL, CHIP 2.2k 5% 1/10W
R804	1-218-772-11	s	METAL, CHIP 680k 0.5% 1/10W
R805	1-216-659-11	■	METAL, CHIP 2.2k 0.5% 1/10W
R806	1-208-806-11	■	METAL, CHIP 10k 0.5% 1/10W
R808	1-216-041-00	s	METAL, CHIP 470 [illegible] 1/10W
R811	1-216-371-00	■	METAL 1.5 5% 2W
R900	1-216-033-00	s	METAL, CHIP 220 5% 1/10W
R901	1-216-033-00	■	METAL, CHIP 220 5% 1/10W
R903	1-216-033-00	■	METAL, CHIP 220 5% 1/10W
R904	1-216-033-00	■	METAL, CHIP 220 [illegible] 1/10W
R905	1-216-033-00	s	METAL, CHIP 220 [illegible] 1/10W
R906	1-216-049-91	s	METAL, CHIP 1k 5% 1/10W
R907	1-216-025-91	s	METAL, CHIP 100 5% 1/10W
R908	1-216-049-91	s	METAL, CHIP 1k 5% 1/10W
R909	1-216-025-91	s	METAL, CHIP 100 5% 1/10W
R910	1-216-049-91	■	METAL, CHIP 1k 5% 1/10W
R911	1-216-625-11	s	METAL, CHIP 82 0.5% 1/10W
R912	1-216-625-11	s	METAL, CHIP 82 0.5% 1/10W
R913	1-216-057-00	s	METAL, CHIP 2.2k 5% 1/10W
R914	1-216-657-11	s	METAL, CHIP 1.8k 0.5% 1/10W
R915	1-208-625-11	s	METAL, CHIP 2.25k 0.1% 1/10W
R916	1-208-630-11	s	METAL, CHIP 11.49 0.1% 1/10W
R917	1-216-657-11	s	METAL, CHIP 1.8k 0.5% 1/10W
R918	1-208-774-11	s	METAL, CHIP 470 0.5% 1/10W
R919	1-208-774-11	s	METAL, CHIP 470 0.5% 1/10W
R920	1-216-657-11	■	METAL, CHIP 1.8k 0.5% 1/10W
R921	1-208-774-11	s	METAL, CHIP 470 0.5% 1/10W
R922	1-216-648-11	s	METAL, CHIP 750 0.5% 1/10W
R924	1-216-033-00	s	METAL, CHIP 220 5% 1/10W
R925	1-216-049-91	■	METAL, CHIP 1k [illegible] 1/10W
R926	1-216-049-91	s	METAL, CHIP 1k 5% 1/10W
R927	1-216-650-11	s	METAL, CHIP 910 0.5% 1/10W
R928	1-216-627-11	s	METAL, CHIP 100 0.5% 1/10W
R929	1-216-659-11	s	METAL, CHIP 2.2k 0.5% 1/10W
R930	1-216-057-00	s	METAL, CHIP 2.2k [illegible] 1/10W
R931	1-216-627-11	s	METAL, CHIP 100 0.5% 1/10W
R932	1-216-659-11	s	METAL, CHIP 2.2k 0.5% 1/10W
R933	1-216-057-00	■	METAL, CHIP 2.2k 5% 1/10W

(AD-115 BOARD(ES-7(UC/J)))

Ref. No. or Q'ty	Part No.	SP	Description
R934	1-216-625-11	s	METAL, CHIP 82 0.5% 1/10W
R935	1-216-624-11	s	METAL, CHIP 75 0.5% 1/10W
R936	1-216-624-11	s	METAL, CHIP 75 0.5% 1/10W
R937	1-216-624-11	s	METAL, CHIP 75 0.5% 1/10W
R938-943	1-216-033-00	■	METAL, CHIP 220 5% 1/10W
R944	1-216-049-91	s	METAL, CHIP 1k 5% 1/10W
R945	1-216-025-91	s	METAL, CHIP 100 5% 1/10W
R946	1-216-049-91	s	METAL, CHIP 1k 5% 1/10W
R947	1-216-025-91	s	METAL, CHIP 100 ■ 1/10W
R948	1-216-049-91	s	METAL, CHIP 1k 5% 1/10W
R949	1-216-622-11	s	METAL, CHIP 62 0.5% 1/10W
R950	1-216-057-00	s	METAL, CHIP 2.2k 5% 1/10W
R951	1-208-623-11	s	METAL, CHIP 1.43k 0.1% 1/10W
R952	1-208-625-11	s	METAL, CHIP 2.25k 0.1% 1/10W
R953	1-208-627-11	■	METAL, CHIP 4.41k 0.1% 1/16W
R954	1-216-657-11	s	METAL, CHIP 1.8k 0.5% 1/10W
R955	1-208-774-11	s	METAL, CHIP 470 0.5% 1/10W
R956	1-208-774-11	s	METAL, CHIP 470 0.5% 1/10W
R957	1-216-657-11	s	METAL, CHIP 1.8k 0.5% 1/10W
R958	1-208-774-11	s	METAL, CHIP 470 0.5% 1/10W
R959	1-216-648-11	s	METAL, CHIP 750 0.5% 1/10W
R960	1-208-814-11	s	METAL, CHIP 22k 0.5% 1/10W
R961	1-216-033-00	s	METAL, CHIP 220 5% 1/10W
R962	1-216-049-91	s	METAL, CHIP 1k 5% 1/10W
R963	1-216-049-91	s	METAL, CHIP 1k 5% 1/10W
R964	1-216-650-11	s	METAL, CHIP 910 0.5% 1/10W
R965	1-216-627-11	■	METAL, CHIP 100 0.5% 1/10W
R966	1-216-659-11	s	METAL, CHIP 2.2k 0.5% 1/10W
R967	1-216-057-00	s	METAL, CHIP 2.2k 5% 1/10W
R968	1-216-627-11	s	METAL, CHIP 100 0.5% 1/10W
R969	1-216-659-11	s	METAL, CHIP 2.2k 0.5% 1/10W
R970	1-216-057-00	s	METAL, CHIP 2.2k 5% 1/10W
R971	1-216-651-11	s	METAL, CHIP 1k 0.5% 1/10W
R972	1-218-772-11	s	METAL, CHIP 680k 0.5% 1/10W
R973	1-216-659-11	s	METAL, CHIP 2.2k 0.5% 1/10W
R974	1-216-659-11	s	METAL, CHIP 2.2k 0.5% 1/10W
R975	1-216-659-11	s	METAL, CHIP 2.2k 0.5% 1/10W
R976	1-216-697-91	s	METAL, CHIP 82k 0.5% 1/10W
R977	1-208-806-11	■	METAL, CHIP 10k 0.5% 1/10W
R978	1-208-822-11	s	METAL, CHIP 47k 0.5% 1/10W
R979	1-216-687-11	s	METAL, CHIP 33k 0.5% 1/10W
R980	1-208-814-11	s	METAL, CHIP 22k 0.5% 1/10W
R981	1-218-760-11	s	METAL, CHIP 220k 0.5% 1/10W
R982	1-208-806-11	s	METAL, CHIP 10k 0.5% 1/10W
R983	1-216-025-91	s	METAL, CHIP 100 5% 1/10W
R984	1-208-806-11	s	METAL, CHIP 10k 0.5% 1/10W
R985	1-216-077-00	s	METAL, CHIP 15k ■ 1/10W
R986	1-216-065-00	s	METAL, CHIP 4.7k 5% 1/10W
R987	1-216-065-00	s	METAL, CHIP 4.7k 5% 1/10W
R988	1-208-774-11	s	METAL, CHIP 470 0.5% 1/10W
R989	1-216-655-11	s	METAL, CHIP 1.5k 0.5% 1/10W
R990	1-216-065-00	s	METAL, CHIP 4.7k 5% 1/10W
R991	1-208-806-11	s	METAL, CHIP 10k 0.5% 1/10W
R992	1-216-041-00	s	METAL, CHIP 470 5% 1/10W
R993	1-216-121-91	s	METAL, CHIP 1■ 5% 1/10W
R994	1-216-699-11	s	METAL, CHIP 100k 0.5% 1/10W
R995	1-216-663-11	s	METAL, CHIP 3.3k 0.5% 1/10W
R996	1-216-699-11	s	METAL, CHIP 100k 0.5% 1/10W
R997	1-216-651-11	s	METAL, CHIP 1k 0.5% 1/10W

(AD-115 BOARD(ES-7(UC/J)))

Ref. No. or Q'ty	Part No.	SP	Description
R998	1-216-697-91	s	METAL, CHIP 82k 0.5% 1/10W
R999	1-216-073-00	s	METAL, CHIP 10k 5% 1/10W
R1000	1-216-025-91	s	METAL, CHIP 100 5% 1/10W
R1001	1-216-687-11	s	METAL, CHIP 33k 0.5% 1/10W
R1002	1-216-033-00	s	METAL, CHIP 220 5% 1/10W
R1003	1-216-651-11	■	METAL, CHIP 1k 0.5% 1/10W
R1004	1-216-073-00	s	METAL, CHIP 10k ■ 1/10W
R1005	1-216-025-91	■	METAL, CHIP 100 5% 1/10W
R1006	1-216-049-91	s	METAL, CHIP 1k 5% 1/10W
R1007	1-218-764-11	■	METAL, CHIP 330k 0.5% 1/10W
R1008	1-208-800-11	s	METAL, CHIP 5.6k 0.5% 1/10W
R1009	1-216-689-11	s	METAL, CHIP 39k 0.5% 1/10W
R1010	1-216-651-11	s	METAL, CHIP 1k 0.5% 1/10W
R1011	1-216-663-11	s	METAL, CHIP 3.3k 0.5% 1/10W
R1012	1-208-806-11	■	METAL, CHIP 10k 0.5% 1/10W
R1013	1-216-673-11	s	METAL, CHIP 8.2k 0.5% 1/10W
R1014	1-218-760-11	s	METAL, CHIP 220k 0.5% 1/10W
R1015	1-216-682-11	■	METAL, CHIP 20k 0.5% 1/10W
R1016	1-208-800-11	s	METAL, CHIP 5.6k 0.5% 1/10W
R1017	1-216-673-11	s	METAL, CHIP 8.2k 0.5% 1/10W
R1018	1-216-073-00	s	METAL, CHIP 10k ■ 1/10W
R1019	1-216-697-91	■	METAL, CHIP 82k 0.5% 1/10W
R1020	1-216-659-11	■	METAL, CHIP 2.2k 0.5% 1/10W
R1021	1-216-651-11	s	METAL, CHIP 1k 0.5% 1/10W
R1022	1-216-667-11	s	METAL, CHIP 4.7k 0.5% 1/10W
R1023	1-218-768-11	■	METAL 470k 0.5% 1/10W
R1024	1-216-619-11	s	METAL, CHIP 47 0.5% 1/10W
R1025	1-216-648-11	s	METAL, CHIP 750 0.5% 1/10W
R1026	1-216-667-11	s	METAL, CHIP 4.7k 0.5% 1/10W
R1028	1-216-603-11	s	METAL, CHIP 10 0.5% 1/10W
R1029	1-216-699-11	s	METAL, CHIP 100k 0.5% 1/10W
R1030	1-216-682-11	s	METAL, CHIP 20k 0.5% 1/10W
R1031	1-216-603-11	s	METAL, CHIP 10 0.5% 1/10W
R1032	1-216-639-11	■	METAL, CHIP 330 0.5% 1/10W
R1033	1-208-814-11	s	METAL, CHIP 22k 0.5% 1/10W
R1034	1-216-025-91	■	METAL, CHIP 100 5% 1/10W
R1035	1-216-025-91	s	METAL, CHIP 100 5% 1/10W
R1036	1-216-696-11	s	METAL, CHIP 75k 0.5% 1/10W
R1037	1-216-057-00	s	METAL, CHIP 2.2k 5% 1/10W
R1038	1-216-057-00	s	METAL, CHIP 2.2k 5% 1/10W
R1039	1-216-651-11	s	METAL, CHIP 1k 0.5% 1/10W
R1040	1-216-651-11	s	METAL, CHIP 1k 0.5% 1/10W
R1041	1-208-812-11	■	METAL, CHIP 18k 0.5% 1/10W
R1042	1-208-812-11	s	METAL, CHIP 18k 0.5% 1/10W
R1043	1-216-651-11	s	METAL, CHIP 1k 0.5% 1/10W
R1044	1-216-651-11	s	METAL, CHIP 1k 0.5% 1/10W
R1045	1-216-081-00	■	METAL, CHIP 22k 5% 1/10W
R1046	1-216-083-00	s	METAL, CHIP 27k ■ 1/10W
R1047	1-216-081-00	■	METAL, CHIP 22k 5% 1/10W
R1048	1-216-083-00	s	METAL, CHIP 27k 5% 1/10W
R1049	1-216-065-00	s	METAL, CHIP 4.7k 5% 1/10W
R1050	1-216-065-00	s	METAL, CHIP 4.7k 5% 1/10W
R1051	1-216-065-00	s	METAL, CHIP 4.7k ■ 1/10W
R1052	1-216-651-11	■	METAL, CHIP 1k 0.5% 1/10W
R1053	1-216-065-00	s	METAL, CHIP 4.7k 5% 1/10W
R1054	1-216-651-11	s	METAL, CHIP 1k 0.5% 1/10W
R1055	1-216-651-11	s	METAL, CHIP 1k 0.5% 1/10W
R1056	1-216-651-11	s	METAL, CHIP 1k 0.5% 1/10W
R1057	1-216-650-11	■	METAL, CHIP 910 0.5% 1/10W

(AD-115 BOARD(ES-7(UC/J)))

Ref. No. or Q'ty	Part No.	SP	Description
R1058	1-216-650-11	s	METAL, CHIP 910 0.5% 1/10W
R1059	1-216-651-11	s	METAL, CHIP 1k 0.5% 1/10W
R1060	1-216-651-11	s	METAL, CHIP 1k 0.5% 1/10W
R1061	1-216-065-00	s	METAL, CHIP 4.7k 5% 1/10W
R1062	1-216-065-00	s	METAL, CHIP 4.7k 5% 1/10W
R1063	1-208-806-11	■	METAL, CHIP 10k 0.5% 1/10W
R1064	1-208-784-11	s	METAL, CHIP 1.2k 0.5% 1/10W
R1065	1-208-806-11	s	METAL, CHIP 10k 0.5% 1/10W
R1066	1-208-784-11	■	METAL, CHIP 1.2k 0.5% 1/10W
R1067	1-216-057-00	■	METAL, CHIP 2.2k 5% 1/10W
R1068	1-216-057-00	s	METAL, CHIP 2.2k 5% 1/10W
R1069	1-208-774-11	■	METAL, CHIP 470 0.5% 1/10W
R1070	1-208-774-11	■	METAL, CHIP 470 0.5% 1/10W
R1071	1-216-650-11	s	METAL, CHIP 910 0.5% 1/10W
R1072	1-208-767-11	s	METAL, CHIP 240 0.5% 1/10W
R1073	1-216-647-11	s	METAL, CHIP 680 0.5% 1/10W
R1074	1-216-649-11	■	METAL, CHIP 820 0.5% 1/10W
R1075	1-208-784-11	s	METAL, CHIP 1.2k 0.5% 1/10W
R1076	1-216-635-11	s	METAL, CHIP 220 0.5% 1/10W
R1077	1-216-651-11	s	METAL, CHIP 1k 0.5% 1/10W
R1078	1-218-772-11	s	METAL, CHIP 680k 0.5% 1/10W
R1079	1-216-659-11	s	METAL, CHIP 2.2k 0.5% 1/10W
R1080	1-216-659-11	■	METAL, CHIP 2.2k 0.5% 1/10W
R1081	1-216-659-11	■	METAL, CHIP 2.2k 0.5% 1/10W
R1082	1-216-697-91	s	METAL, CHIP 82k 0.5% 1/10W
R1083	1-208-806-11	■	METAL, CHIP 10k 0.5% 1/10W
R1084	1-208-822-11	s	METAL, CHIP 47k 0.5% 1/10W
R1085	1-216-687-11	s	METAL, CHIP 33k 0.5% 1/10W
R1086	1-208-814-11	■	METAL, CHIP 22k 0.5% 1/10W
R1087	1-218-760-11	s	METAL, CHIP 220k 0.5% 1/10W
R1088	1-208-806-11	s	METAL, CHIP 10k 0.5% 1/10W
R1089	1-216-025-91	s	METAL, CHIP 100 5% 1/10W
R1090	1-208-806-11	s	METAL, CHIP 10k 0.5% 1/10W
R1091	1-216-077-00	s	METAL, CHIP 15k 5% 1/10W
R1092	1-216-065-00	s	METAL, CHIP 4.7k 5% 1/10W
R1093	1-216-065-00	s	METAL, CHIP 4.7k 5% 1/10W
R1094	1-208-774-11	s	METAL, CHIP 470 0.5% 1/10W
R1095	1-216-655-11	s	METAL, CHIP 1.5k 0.5% 1/10W
R1096	1-216-065-00	■	METAL, CHIP 4.7k 5% 1/10W
R1097	1-208-806-11	s	METAL, CHIP 10k 0.5% 1/10W
R1098	1-216-041-00	s	METAL, CHIP 470 5% 1/10W
R1099	1-216-121-91	s	METAL, CHIP 1M 5% 1/10W
R1100	1-216-699-11	s	METAL, CHIP 100k 0.5% 1/10W
R1101	1-216-663-11	s	METAL, CHIP 3.3k 0.5% 1/10W
R1102	1-216-699-11	s	METAL, CHIP 100k 0.5% 1/10W
R1103	1-216-651-11	s	METAL, CHIP 1k 0.5% 1/10W
R1104	1-216-697-91	s	METAL, CHIP 82k 0.5% 1/10W
R1105	1-216-073-00	s	METAL, CHIP 10k ■ 1/10W
R1106	1-216-025-91	s	METAL, CHIP 100 5% 1/10W
R1107	1-216-687-11	s	METAL, CHIP 33k 0.5% 1/10W
R1108	1-216-033-00	s	METAL, CHIP 220 5% 1/10W
R1109	1-216-651-11	s	METAL, CHIP 1k 0.5% 1/10W
R1110	1-216-073-00	s	METAL, CHIP 10k 5% 1/10W
R1111	1-216-025-91	s	METAL, CHIP 100 5% 1/10W
R1112	1-216-049-91	■	METAL, CHIP 1k 5% 1/10W
R1113	1-218-764-11	s	METAL, CHIP 330k 0.5% 1/10W
R1114	1-208-800-11	s	METAL, CHIP 5.6k 0.5% 1/10W
R1115	1-216-689-11	s	METAL, CHIP 39k 0.5% 1/10W
R1116	1-216-651-11	s	METAL, CHIP 1k 0.5% 1/10W

(AD-115 BOARD(ES-7(UC/J)))

Ref. No. or Q'ty	Part No.	SP	Description
R1117	1-216-663-11	s	METAL, CHIP 3.3k 0.5% 1/10W
R1118	1-208-806-11	■	METAL, CHIP 10k 0.5% 1/10W
R1119	1-216-673-11	s	METAL, CHIP 8.2k 0.5% 1/10W
R1120	1-218-760-11	s	METAL, CHIP 220k 0.5% 1/10W
R1121	1-216-682-11	■	METAL, CHIP 20k 0.5% 1/10W
R1122	1-208-800-11	s	METAL, CHIP 5.6k 0.5% 1/10W
R1123	1-216-673-11	s	METAL, CHIP 8.2k 0.5% 1/10W
R1124	1-216-073-00	■	METAL, CHIP 10k 5% 1/10W
R1125	1-216-697-91	■	METAL, CHIP 82k 0.5% 1/10W
R1126	1-216-659-11	s	METAL, CHIP 2.2k 0.5% 1/10W
R1127	1-216-651-11	■	METAL, CHIP 1k 0.5% 1/10W
R1128	1-216-667-11	s	METAL, CHIP 4.7k 0.5% 1/10W
R1129	1-218-768-11	s	METAL, CHIP 470k 0.5% 1/10W
R1130	1-216-619-11	s	METAL, CHIP 47 0.5% 1/10W
R1131	1-216-667-11	■	METAL, CHIP 4.7k 0.5% 1/10W
R1132	1-216-648-11	s	METAL, CHIP 750 0.5% 1/10W
R1133	1-216-699-11	■	METAL, CHIP 100k 0.5% 1/10W
R1134	1-216-682-11	■	METAL, CHIP 20k 0.5% 1/10W
R1136	1-216-603-11	s	METAL, CHIP 10 0.5% 1/10W
R1137	1-216-639-11	s	METAL, CHIP 330 0.5% 1/10W
R1138	1-216-603-11	s	METAL, CHIP 10 0.5% 1/10W
R1139	1-208-814-11	s	METAL, CHIP 22k 0.5% 1/10W
R1140	1-216-696-11	■	METAL, CHIP 75k 0.5% 1/10W
R1141	1-216-025-91	■	METAL, CHIP 100 5% 1/10W
R1142	1-216-025-91	s	METAL, CHIP 100 5% 1/10W
R1143	1-216-057-00	■	METAL, CHIP 2.2k 5% 1/10W
R1144	1-216-057-00	■	METAL, CHIP 2.2k 5% 1/10W
R1145	1-216-651-11	s	METAL, CHIP 1k 0.5% 1/10W
R1146	1-208-812-11	s	METAL, CHIP 18k 0.5% 1/10W
R1147	1-216-651-11	■	METAL, CHIP 1k 0.5% 1/10W
R1148	1-208-812-11	s	METAL, CHIP 18k 0.5% 1/10W
R1149	1-216-651-11	s	METAL, CHIP 1k 0.5% 1/10W
R1150	1-216-651-11	s	METAL, CHIP 1k 0.5% 1/10W
R1151	1-216-081-00	s	METAL, CHIP 22k 5% 1/10W
R1152	1-216-083-00	s	METAL, CHIP 27k 5% 1/10W
R1153	1-216-081-00	s	METAL, CHIP 22k 5% 1/10W
R1154	1-216-083-00	s	METAL, CHIP 27k 5% 1/10W
R1155	1-216-065-00	■	METAL, CHIP 4.7k 5% 1/10W
R1156	1-216-065-00	s	METAL, CHIP 4.7k 5% 1/10W
R1157	1-216-065-00	s	METAL, CHIP 4.7k 5% 1/10W
R1158	1-216-651-11	s	METAL, CHIP 1k 0.5% 1/10W
R1159	1-216-065-00	s	METAL, CHIP 4.7k 5% 1/10W
R1160	1-216-651-11	s	METAL, CHIP 1k 0.5% 1/10W
R1161	1-216-651-11	s	METAL, CHIP 1k 0.5% 1/10W
R1162	1-216-651-11	■	METAL, CHIP 1k 0.5% 1/10W
R1163	1-216-650-11	■	METAL, CHIP 910 0.5% 1/10W
R1164	1-216-650-11	■	METAL, CHIP 910 0.5% 1/10W
R1165	1-216-651-11	s	METAL, CHIP 1k 0.5% 1/10W
R1166	1-216-651-11	s	METAL, CHIP 1k 0.5% 1/10W
R1167	1-216-065-00	■	METAL, CHIP 4.7k 5% 1/10W
R1168	1-216-065-00	■	METAL, CHIP 4.7k ■ 1/10W
R1169	1-208-806-11	s	METAL, CHIP 10k 0.5% 1/10W
R1170	1-208-784-11	s	METAL, CHIP 1.2k 0.5% 1/10W
R1171	1-208-806-11	s	METAL, CHIP 10k 0.5% 1/10W
R1172	1-208-784-11	s	METAL, CHIP 1.2k 0.5% 1/10W
R1173	1-216-057-00	s	METAL, CHIP 2.2k 5% 1/10W
R1174	1-216-057-00	s	METAL, CHIP 2.2k 5% 1/10W
R1175	1-208-774-11	s	METAL, CHIP 470 0.5% 1/10W
R1176	1-208-774-11	s	METAL, CHIP 470 0.5% 1/10W

(AD-115 BOARD(ES-7(UC/J)))

Ref. No. or Q'ty	Part No.	SP	Description
R1177	1-216-650-11	s	METAL, CHIP 910 0.5% 1/10W
R1178	1-208-767-11	s	METAL, CHIP 240 0.5% 1/10W
R1179	1-216-647-11	s	METAL, CHIP 680 0.5% 1/10W
R1180	1-216-649-11	s	METAL, CHIP 820 0.5% 1/10W
R1181	1-208-784-11	s	METAL, CHIP 1.2k 0.5% 1/10W
R1182	1-216-647-11	s	METAL, CHIP 680 0.5% 1/10W
R1183	1-216-065-00	■	METAL, CHIP 4.7k 5% 1/10W
R1184	1-216-687-11	s	METAL, CHIP 33k 0.5% 1/10W
R1185	1-216-049-91	s	METAL, CHIP 1k 5% 1/10W
R1186	1-216-655-11	s	METAL, CHIP 1.5k 0.5% 1/10W
R1187	1-216-659-11	■	METAL, CHIP 2.2k 0.5% 1/10W
R1188	1-216-053-00	s	METAL, CHIP 1.5k ■ 1/10W
R1189	1-216-053-00	■	METAL, CHIP 1.5k 5% 1/10W
R1190	1-216-065-00	s	METAL, CHIP 4.7k 5% 1/10W
R1191	1-216-687-11	s	METAL, CHIP 33k 0.5% 1/10W
R1192	1-216-049-91	s	METAL, CHIP 1k 5% 1/10W
R1193	1-216-655-11	s	METAL, CHIP 1.5k 0.5% 1/10W
R1194	1-216-659-11	s	METAL, CHIP 2.2k 0.5% 1/10W
R1195	1-216-053-00	s	METAL, CHIP 1.5k 5% 1/10W
R1196	1-216-053-00	s	METAL, CHIP 1.5k 5% 1/10W
RB300-303	1-239-430-11	■	RESISTOR BLOCK, CHIP 4.7kx4
RB304-307	1-233-448-11	s	RESISTOR BLOCK, CHIP 22x8
RB400	1-239-621-11	s	RESISTOR BLOCK, CHIP 22x4
RB600-603	1-239-430-11	s	RESISTOR BLOCK, CHIP 4.7kx4
RB604-607	1-233-448-11	s	RESISTOR BLOCK, CHIP 22x8
RB700	1-239-621-11	s	RESISTOR BLOCK, CHIP 22x4
RB802	1-239-430-11	s	RESISTOR BLOCK, CHIP 4.7kx4
RV101	1-241-758-11	s	RES, ADJ, METAL 100
RV104	1-241-758-11	s	RES, ADJ, METAL 100
RV107	1-241-758-11	s	RES, ADJ, METAL 100
RV200	1-241-763-11	s	RES, ADJ, METAL 4.7k
RV202	1-241-760-11	s	RES, ADJ, METAL 470
RV203	1-241-764-11	s	RES, ADJ, METAL 10k
RV204	1-241-761-11	s	RES, ADJ, METAL 1k
RV205	1-241-761-11	s	RES, ADJ, METAL 1k
RV206	1-241-760-11	s	RES, ADJ, METAL 470
RV300	1-241-760-11	s	RES, ADJ, METAL 470
RV302	1-241-760-11	s	RES, ADJ, METAL 470
RV304	1-241-760-11	s	RES, ADJ, METAL 470
RV306	1-241-762-11	s	RES, ADJ, METAL 2.2k
RV307	1-241-762-11	s	RES, ADJ, METAL 2.2k
RV400	1-241-763-11	s	RES, ADJ, METAL 4.7k
RV500	1-241-764-11	s	RES, ADJ, METAL 10k
RV501	1-241-763-11	s	RES, ADJ, METAL 4.7k
RV503	1-241-761-11	s	RES, ADJ, METAL 1k
RV504	1-241-761-11	s	RES, ADJ, METAL 1k
RV505	1-241-760-11	s	RES, ADJ, METAL 470
RV506	1-241-760-11	s	RES, ADJ, METAL 470
RV600	1-241-760-11	s	RES, ADJ, METAL 470
RV602	1-241-760-11	s	RES, ADJ, METAL 470
RV604	1-241-760-11	s	RES, ADJ, METAL 470
RV606	1-241-762-11	s	RES, ADJ, METAL 2.2k

(AD-115 BOARD(ES-7(UC/J)))

Ref. No. or Q'ty	Part No.	SP	Description
RV607	1-241-762-11	s	RES, ADJ, METAL 2.2k
RV700	1-241-763-11	s	RES, ADJ, METAL 4.7k
X200	1-579-994-12	s	CRYSTAL 14.31818MHz
X201	1-760-267-11	s	VCO, CRYSTAL 14.31818MHz
X500	1-579-994-12	s	CRYSTAL 14.31818MHz
X501	1-760-267-11	■	VCO, CRYSTAL 14.31818MHz

AD-115A BOARD(ES-7(CE))

Ref. No. or Q'ty	Part No.	SP	Description
1pc	A-8273-952-A	o	MOUNTED CIRCUIT BOARD, AD-115A
1pc	3-172-089-01	■	HANDLE
1pc	7-621-770-87	s	SCREW +B 2.6x5
1pc	7-682-546-04	s	SCREW +B 3x5
1pc	7-682-947-01	s	SCREW +PSW 3x6
1pc	7-682-948-01	s	SCREW +PSW 3x8
1pc	7-685-145-11	s	SCREW +P 3x6 TYPE2 NON-SLIT
C100	1-128-551-11	s	ELECT 22uF 20% 63V
C101	1-163-235-11	■	CERAMIC, CHIP 22pF 5% 50V
C102	1-126-933-11	s	ELECT 100uF 20% 16V
C103	1-126-933-11	s	ELECT 100uF 20% 16V
C104-107	1-163-037-11	s	CERAMIC, CHIP 0.022uF 10% 25V
C108	1-163-038-91	■	CERAMIC, CHIP 0.1uF 25V
C109	1-126-967-11	s	ELECT 47uF 20% 50V
C110	1-126-967-11	s	ELECT 47uF 20% 50V
C111	1-163-038-91	s	CERAMIC, CHIP 0.1uF 25V
C112	1-124-903-11	s	ELECT 1uF 20% 50V
C113	1-163-275-11	s	CERAMIC, CHIP 0.001uF 5% 50V
C114	1-163-038-91	s	CERAMIC, CHIP 0.1uF 25V
C115	1-128-551-11	s	ELECT 22uF 20% 63V
C116	1-163-275-11	s	CERAMIC, CHIP 0.001uF 5% 50V
C117	1-128-551-11	s	ELECT 22uF 20% 63V
C118	1-128-551-11	s	ELECT 22uF 20% 63V
C119	1-163-038-91	s	CERAMIC, CHIP 0.1uF 25V
C120-125	1-126-967-11	■	ELECT 47uF 20% 50V
C126	1-128-551-11	s	ELECT 22uF 20% 63V
C127	1-128-551-11	s	ELECT 22uF 20% 63V
C128	1-128-551-11	s	ELECT 22uF 20% 63V
C129	1-126-964-11	s	ELECT 10uF 20% 50V
C130	1-163-231-11	s	CERAMIC, CHIP 15pF 5% 50V
C131	1-163-037-11	s	CERAMIC, CHIP 0.022uF 10% 25V
C132	1-163-120-00	s	CERAMIC, CHIP 130pF 5% 50V
C133	1-163-037-11	s	CERAMIC, CHIP 0.022uF 10% 25V
C134	1-126-933-11	s	ELECT 100uF 20% 16V
C135	1-163-037-11	■	CERAMIC, CHIP 0.022uF 10% 25V
C136	1-163-038-91	■	CERAMIC, CHIP 0.1uF 25V
C137	1-126-967-11	s	ELECT 47uF 20% 50V
C138	1-126-967-11	s	ELECT 47uF 20% 50V
C139	1-126-967-11	s	ELECT 47uF 20% 50V
C140	1-163-037-11	s	CERAMIC, CHIP 0.022uF 10% 25V
C141	1-126-967-11	s	ELECT 47uF 20% 50V
C142	1-126-967-11	s	ELECT 47uF 20% 50V
C143	1-126-967-11	■	ELECT 47uF 20% 50V
C144	1-126-925-11	s	ELECT 470uF 20% 10V
C145	1-131-347-00	s	TANTALUM 1uF 10% 35V
C146	1-163-037-11	s	CERAMIC, CHIP 0.022uF 10% 25V
C147	1-126-933-11	s	ELECT 100uF 20% 16V
C148	1-126-933-11	s	ELECT 100uF 20% 16V
C149	1-163-037-11	s	CERAMIC, CHIP 0.022uF 10% 25V
C150	1-126-933-11	s	ELECT 100uF 20% 16V
C151	1-163-037-11	s	CERAMIC, CHIP 0.022uF 10% 25V
C152	1-126-967-11	s	ELECT 47uF 20% 50V
C153	1-126-967-11	s	ELECT 47uF 20% 50V
C154	1-163-037-11	s	CERAMIC, CHIP 0.022uF 10% 25V
C155	1-163-037-11	■	CERAMIC, CHIP 0.022uF 10% 25V
C156	1-163-037-11	s	CERAMIC, CHIP 0.022uF 10% 25V
C157	1-126-933-11	s	ELECT 100uF 20% 16V
C158	1-126-933-11	s	ELECT 100uF 20% 16V

(AD-115A BOARD(ES-7(CE)))

Ref. No. or Q'ty	Part No.	SP	Description
C159	1-163-038-91	■	CERAMIC, CHIP 0.1uF 25V
C160	1-163-038-91	s	CERAMIC, CHIP 0.1uF 25V
C161	1-128-551-11	s	ELECT 22uF 20% 63V
C162	1-128-551-11	s	ELECT 22uF 20% 63V
C163	1-128-551-11	s	ELECT 22uF 20% 63V
C164	1-163-037-11	s	CERAMIC, CHIP 0.022uF 10% 25V
C165	1-128-551-11	s	ELECT 22uF 20% 63V
C166	1-128-551-11	■	ELECT 22uF 20% 63V
C167	1-128-551-11	s	ELECT 22uF 20% 63V
C168	1-126-933-11	s	ELECT 100uF 20% 16V
C169	1-126-933-11	s	ELECT 100uF 20% 16V
C170	1-126-933-11	s	ELECT 100uF 20% 16V
C171	1-163-251-11	s	CERAMIC, CHIP 100pF 5% 50V
C172	1-163-037-11	■	CERAMIC, CHIP 0.022uF 10% 25V
C173	1-128-551-11	s	ELECT 22uF 20% 63V
C174	1-128-551-11	s	ELECT 22uF 20% 63V
C175	1-163-037-11	s	CERAMIC, CHIP 0.022uF 10% 25V
C176	1-163-037-11	■	CERAMIC, CHIP 0.022uF 10% 25V
C177	1-163-037-11	■	CERAMIC, CHIP 0.022uF 10% 25V
C178	1-126-933-11	■	ELECT 100uF 20% 16V
C179	1-126-933-11	s	ELECT 100uF 20% 16V
C180	1-163-038-91	s	CERAMIC, CHIP 0.1uF 25V
C181	1-163-038-91	s	CERAMIC, CHIP 0.1uF 25V
C182	1-128-551-11	s	ELECT 22uF 20% 63V
C183	1-128-551-11	■	ELECT 22uF 20% 63V
C184	1-128-551-11	s	ELECT 22uF 20% 63V
C185	1-163-037-11	■	CERAMIC, CHIP 0.022uF 10% 25V
C186	1-128-551-11	s	ELECT 22uF 20% 63V
C187	1-128-551-11	■	ELECT 22uF 20% 63V
C188	1-128-551-11	■	ELECT 22uF 20% 63V
C189	1-126-933-11	■	ELECT 100uF 20% 16V
C190	1-126-933-11	s	ELECT 100uF 20% 16V
C191	1-126-933-11	s	ELECT 100uF 20% 16V
C192	1-163-251-11	s	CERAMIC, CHIP 100pF 5% 50V
C193	1-163-037-11	s	CERAMIC, CHIP 0.022uF 10% 25V
C194	1-128-551-11	s	ELECT 22uF 20% 63V
C195	1-128-551-11	s	ELECT 22uF 20% 63V
C196	1-163-037-11	s	CERAMIC, CHIP 0.022uF 10% 25V
C197	1-163-037-11	s	CERAMIC, CHIP 0.022uF 10% 25V
C198	1-163-037-11	s	CERAMIC, CHIP 0.022uF 10% 25V
C199	1-126-933-11	s	ELECT 100uF 20% 16V
C200	1-126-933-11	■	ELECT 100uF 20% 16V
C201	1-163-038-91	■	CERAMIC, CHIP 0.1uF 25V
C202	1-163-038-91	■	CERAMIC, CHIP 0.1uF 25V
C203	1-126-933-11	s	ELECT 100uF 20% 16V
C204	1-126-933-11	s	ELECT 100uF 20% 16V
C205	1-163-037-11	s	CERAMIC, CHIP 0.022uF 10% 25V
C206	1-163-224-11	s	CERAMIC, CHIP 7pF 50V
C207	1-163-231-11	■	CERAMIC, CHIP 15pF 5% 50V
C208	1-163-087-00	s	CERAMIC, CHIP 4pF 50V
C209	1-163-038-91	s	CERAMIC, CHIP 0.1uF 25V
C210	1-163-037-11	s	CERAMIC, CHIP 0.022uF 10% 25V
C211	1-163-227-11	■	CERAMIC, CHIP 10pF 5% 50V
C212	1-126-964-11	s	ELECT 10uF 20% 50V
C213	1-163-038-91	s	CERAMIC, CHIP 0.1uF 25V
C214	1-164-232-11	s	CERAMIC, CHIP 0.01uF 10% 100V
C215	1-126-933-11	s	ELECT 100uF 20% 16V
C216	1-163-038-91	s	CERAMIC, CHIP 0.1uF 25V
C217	1-164-232-11	s	CERAMIC, CHIP 0.01uF 10% 100V

(AD-115A BOARD(ES-7(CE)))

Ref. No. or Q'ty	Part No.	SP	Description
C218	1-163-038-91	■	CERAMIC, CHIP 0.1uF 25V
C219	1-126-933-11	s	ELECT 100uF 20% 16V
C220	1-163-038-91	s	CERAMIC, CHIP 0.1uF 25V
C221	1-163-133-00	s	CERAMIC, CHIP 470pF 5% 50V
C222	1-163-038-91	■	CERAMIC, CHIP 0.1uF 25V
C223	1-126-964-11	s	ELECT 10uF 20% 50V
C224	1-163-038-91	s	CERAMIC, CHIP 0.1uF 25V
C225	1-126-933-11	s	ELECT 100uF 20% 16V
C226	1-126-933-11	s	ELECT 100uF 20% 16V
C227-237	1-163-038-91	s	CERAMIC, CHIP 0.1uF 25V
C238	1-126-967-11	s	ELECT 47uF 20% 50V
C239	1-128-551-11	s	ELECT 22uF 20% 63V
C240	1-128-551-11	s	ELECT 22uF 20% 63V
C241	1-126-967-11	s	ELECT 47uF 20% 50V
C242	1-163-038-91	s	CERAMIC, CHIP 0.1uF 25V
C243	1-163-037-11	s	CERAMIC, CHIP 0.022uF 10% 25V
C244	1-126-933-11	s	ELECT 100uF 20% 16V
C245	1-163-038-91	s	CERAMIC, CHIP 0.1uF 25V
C246	1-126-933-11	s	ELECT 100uF 20% 16V
C247	1-163-037-11	s	CERAMIC, CHIP 0.022uF 10% 25V
C248	1-163-037-11	■	CERAMIC, CHIP 0.022uF 10% 25V
C249	1-163-227-11	■	CERAMIC, CHIP 10pF 5% 50V
C250	1-163-121-00	■	CERAMIC, CHIP 150pF 5% 50V
C251	1-126-924-11	s	ELECT 330uF 20% 10V
C252	1-163-235-11	s	CERAMIC, CHIP 22pF 5% 50V
C253	1-163-038-91	s	CERAMIC, CHIP 0.1uF 25V
C254	1-163-087-00	■	CERAMIC, CHIP 4pF 50V
C255	1-163-227-11	■	CERAMIC, CHIP 10pF 5% 50V
C256	1-163-235-11	s	CERAMIC, CHIP 22pF 5% 50V
C257	1-163-038-91	s	CERAMIC, CHIP 0.1uF 25V
C258	1-163-235-11	s	CERAMIC, CHIP 22pF 5% 50V
C259	1-126-933-11	s	ELECT 100uF 20% 16V
C260	1-163-037-11	s	CERAMIC, CHIP 0.022uF 10% 25V
C261	1-126-933-11	s	ELECT 100uF 20% 16V
C262	1-126-933-11	s	ELECT 100uF 20% 16V
C263	1-163-038-91	s	CERAMIC, CHIP 0.1uF 25V
C264	1-163-038-91	s	CERAMIC, CHIP 0.1uF 25V
C265	1-163-038-91	s	CERAMIC, CHIP 0.1uF 25V
C266	1-126-933-11	s	ELECT 100uF 20% 16V
C267	1-126-933-11	s	ELECT 100uF 20% 16V
C268	1-163-239-11	s	CERAMIC, CHIP 33pF 5% 50V
C269	1-163-227-11	s	CERAMIC, CHIP 10pF 5% 50V
C270	1-163-038-91	s	CERAMIC, CHIP 0.1uF 25V
C271	1-163-251-11	s	CERAMIC, CHIP 100pF 5% 50V
C272	1-163-239-11	s	CERAMIC, CHIP 33pF 5% 50V
C273	1-163-251-11	s	CERAMIC, CHIP 100pF ■ 50V
C274	1-163-038-91	s	CERAMIC, CHIP 0.1uF 25V
C275	1-163-239-11	s	CERAMIC, CHIP 33pF ■ 50V
C276	1-163-038-91	s	CERAMIC, CHIP 0.1uF 25V
C277	1-163-038-91	s	CERAMIC, CHIP 0.1uF 25V
C278	1-163-038-91	s	CERAMIC, CHIP 0.1uF 25V
C279	1-163-121-00	s	CERAMIC, CHIP 150pF 5% 50V
C280	1-163-038-91	s	CERAMIC, CHIP 0.1uF 25V
C281	1-126-964-11	s	ELECT 10uF 20% 50V
C282	1-164-232-11	s	CERAMIC, CHIP 0.01uF 10% 100V
C283	1-163-038-91	■	CERAMIC, CHIP 0.1uF 25V
C284	1-163-809-11	s	CERAMIC, CHIP 0.047uF 10% 25V
C285	1-163-038-91	s	CERAMIC, CHIP 0.1uF 25V
C286	1-163-251-11	s	CERAMIC, CHIP 100pF 5% 50V

(AD-115A BOARD(ES-7(CE)))

Ref. No. or Q'ty	Part No.	SP	Description
C287	1-163-038-91	s	CERAMIC, CHIP 0.1uF 25V
C288	1-163-038-91	s	CERAMIC, CHIP 0.1uF 25V
C289	1-163-251-11	s	CERAMIC, CHIP 100pF 5% 50V
C290	1-124-903-11	■	ELECT 1uF 20% 50V
C291	1-163-038-91	s	CERAMIC, CHIP 0.1uF 25V
C292	1-126-933-11	■	ELECT 100uF 20% 16V
C293	1-163-038-91	s	CERAMIC, CHIP 0.1uF 25V
C294	1-164-232-11	s	CERAMIC, CHIP 0.01uF 10% 100V
C295	1-163-038-91	■	CERAMIC, CHIP 0.1uF 25V
C296	1-163-038-91	s	CERAMIC, CHIP 0.1uF 25V
C297	1-128-551-11	s	ELECT 22uF 20% 63V
C298	1-163-038-91	s	CERAMIC, CHIP 0.1uF 25V
C299	1-163-038-91	s	CERAMIC, CHIP 0.1uF 25V
C300	1-126-933-11	■	ELECT 100uF 20% 16V
C301	1-163-038-91	s	CERAMIC, CHIP 0.1uF 25V
C302	1-163-038-91	■	CERAMIC, CHIP 0.1uF 25V
C303	1-126-933-11	s	ELECT 100uF 20% 16V
C304	1-126-933-11	s	ELECT 100uF 20% 16V
C305	1-163-235-11	s	CERAMIC, CHIP 22pF 5% 50V
C306	1-163-235-11	s	CERAMIC, CHIP 22pF 5% 50V
C307	1-163-038-91	s	CERAMIC, CHIP 0.1uF 25V
C308	1-163-037-11	s	CERAMIC, CHIP 0.022uF 10% 25V
C309	1-126-967-11	s	ELECT 47uF 20% 50V
C310	1-126-967-11	■	ELECT 47uF 20% 50V
C311	1-126-933-11	■	ELECT 100uF 20% 16V
C312	1-163-038-91	s	CERAMIC, CHIP 0.1uF 25V
C313	1-163-038-91	■	CERAMIC, CHIP 0.1uF 25V
C314	1-163-038-91	s	CERAMIC, CHIP 0.1uF 25V
C315	1-126-967-11	■	ELECT 47uF 20% 50V
C316	1-126-967-11	s	ELECT 47uF 20% 50V
C317	1-163-038-91	■	CERAMIC, CHIP 0.1uF 25V
C318	1-163-038-91	s	CERAMIC, CHIP 0.1uF 25V
C319	1-163-038-91	■	CERAMIC, CHIP 0.1uF 25V
C320	1-126-967-11	■	ELECT 47uF 20% 50V
C321	1-163-038-91	s	CERAMIC, CHIP 0.1uF 25V
C322	1-126-967-11	s	ELECT 47uF 20% 50V
C323	1-126-933-11	■	ELECT 100uF 20% 16V
C324	1-163-038-91	s	CERAMIC, CHIP 0.1uF 25V
C326	1-163-239-11	s	CERAMIC, CHIP 33pF 5% 50V
C327	1-126-933-11	s	ELECT 100uF 20% 16V
C328	1-163-235-11	s	CERAMIC, CHIP 22pF 5% 50V
C329	1-163-231-11	■	CERAMIC, CHIP 15pF 5% 50V
C330	1-163-037-11	s	CERAMIC, CHIP 0.022uF 10% 25V
C331	1-163-037-11	s	CERAMIC, CHIP 0.022uF 10% 25V
C332	1-128-551-11	s	ELECT 22uF 20% 63V
C333	1-128-551-11	s	ELECT 22uF 20% 63V
C334	1-126-967-11	■	ELECT 47uF 20% 50V
C335	1-163-038-91	s	CERAMIC, CHIP 0.1uF 25V
C336	1-126-967-11	■	ELECT 47uF 20% 50V
C337	1-126-933-11	s	ELECT 100uF 20% 16V
C338	1-163-038-91	s	CERAMIC, CHIP 0.1uF 25V
C340	1-163-239-11	s	CERAMIC, CHIP 33pF 5% 50V
C341	1-126-933-11	s	ELECT 100uF 20% 16V
C342	1-163-235-11	s	CERAMIC, CHIP 22pF 5% 50V
C343	1-163-231-11	■	CERAMIC, CHIP 15pF 5% 50V
C344	1-163-037-11	s	CERAMIC, CHIP 0.022uF 10% 25V
C345	1-163-037-11	s	CERAMIC, CHIP 0.022uF 10% 25V
C346	1-128-551-11	■	ELECT 22uF 20% 63V
C347	1-128-551-11	s	ELECT 22uF 20% 63V

(AD-115A BOARD(ES-7(CE)))

Ref. No. or Q'ty	Part No.	SP	Description
C348	1-126-967-11	s	ELECT 47uF 20% 50V
C349	1-128-551-11	s	ELECT 22uF 20% 63V
C350	1-128-551-11	s	ELECT 22uF 20% 63V
C351	1-128-551-11	s	ELECT 22uF 20% 63V
C352	1-163-038-91	s	CERAMIC, CHIP 0.1uF 25V
C353	1-163-038-91	s	CERAMIC, CHIP 0.1uF 25V
C354	1-126-967-11	s	ELECT 47uF 20% 50V
C355-364	1-163-038-91	■	CERAMIC, CHIP 0.1uF 25V
C365	1-126-967-11	s	ELECT 47uF 20% 50V
C366	1-164-232-11	s	CERAMIC, CHIP 0.01uF 10% 100V
C367	1-164-232-11	s	CERAMIC, CHIP 0.01uF 10% 100V
C368	1-164-232-11	s	CERAMIC, CHIP 0.01uF 10% 100V
C369	1-163-038-91	s	CERAMIC, CHIP 0.1uF 25V
C370	1-163-037-11	s	CERAMIC, CHIP 0.022uF 10% 25V
C371	1-164-232-11	s	CERAMIC, CHIP 0.01uF 10% 100V
C372	1-163-037-11	s	CERAMIC, CHIP 0.022uF 10% 25V
C373	1-163-038-91	s	CERAMIC, CHIP 0.1uF 25V
C374	1-126-963-11	s	ELECT 4.7uF 20% 50V
C375	1-163-231-11	s	CERAMIC, CHIP 15pF 5% 50V
C376	1-163-038-91	s	CERAMIC, CHIP 0.1uF 25V
C377	1-126-967-11	s	ELECT 47uF 20% 50V
C378	1-126-967-11	s	ELECT 47uF 20% 50V
C379-382	1-163-038-91	s	CERAMIC, CHIP 0.1uF 25V
C400	1-126-967-11	s	ELECT 47uF 20% 50V
C401	1-126-964-11	s	ELECT 10uF 20% 50V
C402	1-163-038-91	■	CERAMIC, CHIP 0.1uF 25V
C403	1-163-038-91	s	CERAMIC, CHIP 0.1uF 25V
C404	1-163-251-11	s	CERAMIC, CHIP 100pF 5% 50V
C405	1-163-227-11	s	CERAMIC, CHIP 10pF 5% 50V
C406	1-163-133-00	■	CERAMIC, CHIP 470pF 5% 50V
C407-410	1-163-038-91	s	CERAMIC, CHIP 0.1uF 25V
C411	1-126-933-11	s	ELECT 100uF 20% 16V
C412-415	1-163-038-91	s	CERAMIC, CHIP 0.1uF 25V
C416	1-163-251-11	s	CERAMIC, CHIP 100pF 5% 50V
C417	1-163-251-11	s	CERAMIC, CHIP 100pF 5% 50V
C418	1-163-275-11	s	CERAMIC, CHIP 0.001uF 5% 50V
C419	1-163-251-11	s	CERAMIC, CHIP 100pF 5% 50V
C420	1-163-017-00	s	CERAMIC, CHIP 0.0047uF 5% 50V
C421-427	1-163-038-91	s	CERAMIC, CHIP 0.1uF 25V
C428	1-163-235-11	s	CERAMIC, CHIP 22pF 5% 50V
C429-438	1-163-038-91	s	CERAMIC, CHIP 0.1uF 25V
C439	1-163-251-11	s	CERAMIC, CHIP 100pF 5% 50V
C440	1-163-038-91	s	CERAMIC, CHIP 0.1uF 25V
C441	1-163-038-91	s	CERAMIC, CHIP 0.1uF 25V
C442	1-126-967-11	s	ELECT 47uF 20% 50V
C443	1-163-137-00	s	CERAMIC, CHIP 680pF 5% 50V
C444-448	1-163-038-91	s	CERAMIC, CHIP 0.1uF 25V
C449	1-126-967-11	s	ELECT 47uF 20% 50V
C450	1-163-038-91	s	CERAMIC, CHIP 0.1uF 25V
C451	1-163-275-11	s	CERAMIC, CHIP 0.001uF 5% 50V
C452	1-164-232-11	s	CERAMIC, CHIP 0.01uF 10% 100V
C453	1-163-038-91	s	CERAMIC, CHIP 0.1uF 25V
C454	1-164-232-11	■	CERAMIC, CHIP 0.01uF 10% 100V
C455	1-164-005-11	■	CERAMIC, CHIP 0.47uF 25V
C456-459	1-163-038-91	s	CERAMIC, CHIP 0.1uF 25V
C460	1-163-133-00	s	CERAMIC, CHIP 470pF 5% 50V
C461	1-163-038-91	s	CERAMIC, CHIP 0.1uF 25V
C462	1-163-239-11	■	CERAMIC, CHIP 33pF 5% 50V
C463	1-164-232-11	s	CERAMIC, CHIP 0.01uF 10% 100V

(AD-115A BOARD(ES-7(CE)))

Ref. No. or Q'ty	Part No.	SP	Description
C464	1-163-038-91	s	CERAMIC, CHIP 0.1uF 25V
C465	1-163-275-11	■	CERAMIC, CHIP 0.001uF ■ 50V
C466	1-163-038-91	s	CERAMIC, CHIP 0.1uF 25V
C467	1-163-038-91	s	CERAMIC, CHIP 0.1uF 25V
C468	1-163-038-91	s	CERAMIC, CHIP 0.1uF 25V
C469	1-163-037-11	s	CERAMIC, CHIP 0.022uF 10% 25V
C470	1-126-963-11	s	ELECT 4.7uF 20% 50V
C500	1-126-933-11	s	ELECT 100uF 20% 16V
C501	1-163-038-91	■	CERAMIC, CHIP 0.1uF 25V
C502	1-163-038-91	s	CERAMIC, CHIP 0.1uF 25V
C503	1-126-933-11	s	ELECT 100uF 20% 16V
C504	1-126-933-11	s	ELECT 100uF 20% 16V
C505	1-163-037-11	s	CERAMIC, CHIP 0.022uF 10% 25V
C506	1-163-224-11	s	CERAMIC, CHIP 7pF 50V
C507	1-163-231-11	s	CERAMIC, CHIP 15pF 5% 50V
C508	1-163-087-00	s	CERAMIC, CHIP 4pF 50V
C509	1-163-038-91	s	CERAMIC, CHIP 0.1uF 25V
C510	1-163-037-11	s	CERAMIC, CHIP 0.022uF 10% 25V
C511	1-163-227-11	s	CERAMIC, CHIP 10pF 5% 50V
C512	1-126-964-11	s	ELECT 10uF 20% 50V
C513	1-163-038-91	s	CERAMIC, CHIP 0.1uF 25V
C514	1-164-232-11	s	CERAMIC, CHIP 0.01uF 10% 100V
C515	1-126-933-11	■	ELECT 100uF 20% 16V
C516	1-163-038-91	■	CERAMIC, CHIP 0.1uF 25V
C517	1-164-232-11	s	CERAMIC, CHIP 0.01uF 10% 100V
C518	1-163-038-91	s	CERAMIC, CHIP 0.1uF 25V
C519	1-126-933-11	s	ELECT 100uF 20% 16V
C520	1-163-038-91	s	CERAMIC, CHIP 0.1uF 25V
C521	1-163-133-00	■	CERAMIC, CHIP 470pF ■ 50V
C522	1-163-038-91	■	CERAMIC, CHIP 0.1uF 25V
C523	1-126-964-11	s	ELECT 10uF 20% 50V
C524	1-163-038-91	s	CERAMIC, CHIP 0.1uF 25V
C525	1-126-933-11	s	ELECT 100uF 20% 16V
C526	1-126-933-11	s	ELECT 100uF 20% 16V
C527-537	1-163-038-91	s	CERAMIC, CHIP 0.1uF 25V
C538	1-126-967-11	s	ELECT 47uF 20% 50V
C539	1-128-551-11	s	ELECT 22uF 20% 63V
C540	1-128-551-11	■	ELECT 22uF 20% 63V
C541	1-126-967-11	■	ELECT 47uF 20% 50V
C542	1-163-038-91	s	CERAMIC, CHIP 0.1uF 25V
C543	1-163-037-11	s	CERAMIC, CHIP 0.022uF 10% 25V
C544	1-126-933-11	s	ELECT 100uF 20% 16V
C545	1-163-038-91	■	CERAMIC, CHIP 0.1uF 25V
C546	1-163-037-11	■	CERAMIC, CHIP 0.022uF 10% 25V
C547	1-163-037-11	■	CERAMIC, CHIP 0.022uF 10% 25V
C548	1-126-933-11	s	ELECT 100uF 20% 16V
C549	1-163-227-11	■	CERAMIC, CHIP 10pF 5% 50V
C550	1-163-121-00	s	CERAMIC, CHIP 150pF 5% 50V
C551	1-126-924-11	s	ELECT 330uF 20% 10V
C552	1-163-235-11	s	CERAMIC, CHIP 22pF 5% 50V
C553	1-163-087-00	s	CERAMIC, CHIP 4pF 50V
C554	1-163-038-91	s	CERAMIC, CHIP 0.1uF 25V
C555	1-163-227-11	s	CERAMIC, CHIP 10pF 5% 50V
C556	1-163-235-11	■	CERAMIC, CHIP 22pF 5% 50V
C557	1-163-038-91	■	CERAMIC, CHIP 0.1uF 25V
C558	1-163-235-11	s	CERAMIC, CHIP 22pF 5% 50V
C559	1-126-933-11	■	ELECT 100uF 20% 16V
C560	1-163-037-11	s	CERAMIC, CHIP 0.022uF 10% 25V
C561	1-126-933-11	s	ELECT 100uF 20% 16V

(AD-115A BOARD(ES-7(CE)))

Ref. No. or Q'ty	Part No.	SP	Description
C562	1-126-933-11	■	ELECT 100uF 20% 16V
C563	1-163-038-91	■	CERAMIC, CHIP 0.1uF 25V
C564	1-163-038-91	s	CERAMIC, CHIP 0.1uF 25V
C565	1-163-038-91	s	CERAMIC, CHIP 0.1uF 25V
C566	1-126-933-11	s	ELECT 100uF 20% 16V
C567	1-126-933-11	s	ELECT 100uF 20% 16V
C568	1-163-239-11	s	CERAMIC, CHIP 33pF ■ 50V
C569	1-163-227-11	s	CERAMIC, CHIP 10pF 5% 50V
C570	1-163-038-91	s	CERAMIC, CHIP 0.1uF 25V
C571	1-163-251-11	s	CERAMIC, CHIP 100pF 5% 50V
C572	1-163-239-11	s	CERAMIC, CHIP 33pF 5% 50V
C573	1-163-251-11	s	CERAMIC, CHIP 100pF 5% 50V
C574	1-163-038-91	s	CERAMIC, CHIP 0.1uF 25V
C575	1-163-239-11	■	CERAMIC, CHIP 33pF 5% 50V
C576	1-163-038-91	s	CERAMIC, CHIP 0.1uF 25V
C577	1-163-038-91	s	CERAMIC, CHIP 0.1uF 25V
C578	1-163-038-91	■	CERAMIC, CHIP 0.1uF 25V
C579	1-163-121-00	s	CERAMIC, CHIP 150pF 5% 50V
C580	1-163-038-91	s	CERAMIC, CHIP 0.1uF 25V
C581	1-126-964-11	s	ELECT 10uF 20% 50V
C582	1-164-232-11	■	CERAMIC, CHIP 0.01uF 10% 100V
C583	1-163-038-91	s	CERAMIC, CHIP 0.1uF 25V
C584	1-163-809-11	s	CERAMIC, CHIP 0.047uF 10% 25V
C585	1-163-038-91	■	CERAMIC, CHIP 0.1uF 25V
C586	1-163-251-11	s	CERAMIC, CHIP 100pF 5% 50V
C587	1-163-038-91	s	CERAMIC, CHIP 0.1uF 25V
C588	1-163-038-91	s	CERAMIC, CHIP 0.1uF 25V
C589	1-163-251-11	s	CERAMIC, CHIP 100pF 5% 50V
C590	1-124-903-11	s	ELECT 1uF 20% 50V
C591	1-163-038-91	s	CERAMIC, CHIP 0.1uF 25V
C592	1-126-933-11	■	ELECT 100uF 20% 16V
C593	1-163-038-91	■	CERAMIC, CHIP 0.1uF 25V
C594	1-164-232-11	s	CERAMIC, CHIP 0.01uF 10% 100V
C595	1-163-038-91	s	CERAMIC, CHIP 0.1uF 25V
C596	1-163-038-91	s	CERAMIC, CHIP 0.1uF 25V
C597	1-163-038-91	s	CERAMIC, CHIP 0.1uF 25V
C598	1-128-551-11	s	ELECT 22uF 20% 63V
C599	1-163-038-91	s	CERAMIC, CHIP 0.1uF 25V
C600	1-126-933-11	s	ELECT 100uF 20% 16V
C601	1-163-038-91	s	CERAMIC, CHIP 0.1uF 25V
C602	1-163-038-91	s	CERAMIC, CHIP 0.1uF 25V
C603	1-126-933-11	s	ELECT 100uF 20% 16V
C604	1-126-933-11	■	ELECT 100uF 20% 16V
C605	1-163-235-11	s	CERAMIC, CHIP 22pF 5% 50V
C606	1-163-235-11	■	CERAMIC, CHIP 22pF 5% 50V
C607	1-163-038-91	s	CERAMIC, CHIP 0.1uF 25V
C608	1-163-037-11	■	CERAMIC, CHIP 0.022uF 10% 25V
C609	1-126-967-11	s	ELECT 47uF 20% 50V
C610	1-126-967-11	s	ELECT 47uF 20% 50V
C611	1-126-933-11	s	ELECT 100uF 20% 16V
C612	1-163-038-91	s	CERAMIC, CHIP 0.1uF 25V
C613	1-163-038-91	s	CERAMIC, CHIP 0.1uF 25V
C614	1-163-038-91	s	CERAMIC, CHIP 0.1uF 25V
C615	1-126-967-11	s	ELECT 47uF 20% 50V
C616	1-126-967-11	s	ELECT 47uF 20% 50V
C617	1-163-038-91	■	CERAMIC, CHIP 0.1uF 25V
C618	1-163-038-91	s	CERAMIC, CHIP 0.1uF 25V
C619	1-163-038-91	s	CERAMIC, CHIP 0.1uF 25V
C620	1-126-967-11	s	ELECT 47uF 20% 50V

(AD-115A BOARD(ES-7(CE)))

Ref. No. or Q'ty	Part No.	SP	Description
C621	1-163-038-91	s	CERAMIC, CHIP 0.1uF 25V
C622	1-126-967-11	s	ELECT 47uF 20% 50V
C623	1-126-933-11	s	ELECT 100uF 20% 16V
C624	1-163-038-91	s	CERAMIC, CHIP 0.1uF 25V
C626	1-163-239-11	s	CERAMIC, CHIP 33pF 5% 50V
C627	1-126-933-11	s	ELECT 100uF 20% 16V
C628	1-163-235-11	s	CERAMIC, CHIP 22pF 5% 50V
C629	1-163-231-11	■	CERAMIC, CHIP 15pF 5% 50V
C630	1-163-037-11	s	CERAMIC, CHIP 0.022uF 10% 25V
C631	1-163-037-11	■	CERAMIC, CHIP 0.022uF 10% 25V
C632	1-128-551-11	■	ELECT 22uF 20% 63V
C633	1-128-551-11	■	ELECT 22uF 20% 63V
C634	1-126-967-11	s	ELECT 47uF 20% 50V
C635	1-163-038-91	s	CERAMIC, CHIP 0.1uF 25V
C636	1-126-967-11	s	ELECT 47uF 20% 50V
C637	1-126-933-11	■	ELECT 100uF 20% 16V
C638	1-163-038-91	■	CERAMIC, CHIP 0.1uF 25V
C640	1-163-239-11	s	CERAMIC, CHIP 33pF 5% 50V
C641	1-126-933-11	■	ELECT 100uF 20% 16V
C642	1-163-235-11	s	CERAMIC, CHIP 22pF 5% 50V
C643	1-163-231-11	s	CERAMIC, CHIP 15pF 5% 50V
C644	1-163-037-11	s	CERAMIC, CHIP 0.022uF 10% 25V
C645	1-163-037-11	s	CERAMIC, CHIP 0.022uF 10% 25V
C646	1-128-551-11	s	ELECT 22uF 20% 63V
C647	1-128-551-11	■	ELECT 22uF 20% 63V
C648	1-126-967-11	■	ELECT 47uF 20% 50V
C649	1-128-551-11	s	ELECT 22uF 20% 63V
C650	1-128-551-11	■	ELECT 22uF 20% 63V
C651	1-128-551-11	■	ELECT 22uF 20% 63V
C652	1-163-038-91	■	CERAMIC, CHIP 0.1uF 25V
C653	1-163-038-91	■	CERAMIC, CHIP 0.1uF 25V
C654	1-126-967-11	■	ELECT 47uF 20% 50V
C655-664	1-163-038-91	■	CERAMIC, CHIP 0.1uF 25V
C665	1-126-967-11	■	ELECT 47uF 20% 50V
C666	1-164-232-11	■	CERAMIC, CHIP 0.01uF 10% 100V
C667	1-164-232-11	s	CERAMIC, CHIP 0.01uF 10% 100V
C668	1-164-232-11	■	CERAMIC, CHIP 0.01uF 10% 100V
C669	1-163-038-91	s	CERAMIC, CHIP 0.1uF 25V
C670	1-163-037-11	■	CERAMIC, CHIP 0.022uF 10% 25V
C671	1-164-232-11	■	CERAMIC, CHIP 0.01uF 10% 100V
C672	1-163-037-11	■	CERAMIC, CHIP 0.022uF 10% 25V
C673	1-163-038-91	■	CERAMIC, CHIP 0.1uF 25V
C674	1-126-963-11	s	ELECT 4.7uF 20% 50V
C675	1-163-231-11	s	CERAMIC, CHIP 15pF 5% 50V
C676	1-163-038-91	■	CERAMIC, CHIP 0.1uF 25V
C677	1-126-967-11	■	ELECT 47uF 20% 50V
C678	1-126-967-11	s	ELECT 47uF 20% 50V
C679-682	1-163-038-91	■	CERAMIC, CHIP 0.1uF 25V
C700	1-126-967-11	s	ELECT 47uF 20% 50V
C701	1-126-964-11	s	ELECT 10uF 20% 50V
C702	1-163-038-91	s	CERAMIC, CHIP 0.1uF 25V
C703	1-163-038-91	■	CERAMIC, CHIP 0.1uF 25V
C704	1-163-251-11	■	CERAMIC, CHIP 100pF 5% 50V
C705	1-163-227-11	■	CERAMIC, CHIP 10pF 5% 50V
C706	1-163-133-00	s	CERAMIC, CHIP 470pF 5% 50V
C707-710	1-163-038-91	s	CERAMIC, CHIP 0.1uF 25V
C711	1-126-933-11	s	ELECT 100uF 20% 16V
C712-715	1-163-038-91	s	CERAMIC, CHIP 0.1uF 25V
C716	1-163-251-11	s	CERAMIC, CHIP 100pF 5% 50V

(AD-115A BOARD(ES-7(CE)))

Ref. No. or Q'ty	Part No.	SP	Description
C717	1-163-251-11	s	CERAMIC, CHIP 100pF 5% 50V
C718	1-163-275-11	s	CERAMIC, CHIP 0.001uF 5% 50V
C719	1-163-251-11	s	CERAMIC, CHIP 100pF 5% 50V
C720	1-163-017-00	s	CERAMIC, CHIP 0.0047uF [illegible] 50V
C721	1-163-038-91	s	CERAMIC, CHIP 0.1uF 25V
C723-727	1-163-038-91	s	CERAMIC, CHIP 0.1uF 25V
C728	1-163-235-11	s	CERAMIC, CHIP 22pF 5% 50V
C729-738	1-163-038-91	s	CERAMIC, CHIP 0.1uF 25V
C739	1-163-251-11	s	CERAMIC, CHIP 100pF 5% 50V
C740	1-163-038-91	■	CERAMIC, CHIP 0.1uF 25V
C741	1-163-038-91	s	CERAMIC, CHIP 0.1uF 25V
C742	1-126-967-11	s	ELECT 47uF 20% 50V
C743	1-163-137-00	s	CERAMIC, CHIP 680pF 5% 50V
C744-748	1-163-038-91	s	CERAMIC, CHIP 0.1uF 25V
C749	1-126-967-11	s	ELECT 47uF 20% 50V
C750	1-163-038-91	s	CERAMIC, CHIP 0.1uF 25V
C751	1-163-275-11	s	CERAMIC, CHIP 0.001uF 5% 50V
C752	1-164-232-11	■	CERAMIC, CHIP 0.01uF 10% 100V
C753	1-163-038-91	s	CERAMIC, CHIP 0.1uF 25V
C754	1-164-232-11	s	CERAMIC, CHIP 0.01uF 10% 100V
C755	1-164-005-11	s	CERAMIC, CHIP 0.47uF 25V
C756-759	1-163-038-91	■	CERAMIC, CHIP 0.1uF 25V
C760	1-163-133-00	s	CERAMIC, CHIP 470pF 5% 50V
C761	1-163-038-91	s	CERAMIC, CHIP 0.1uF 25V
C762	1-163-239-11	s	CERAMIC, CHIP 33pF 5% 50V
C763	1-164-232-11	s	CERAMIC, CHIP 0.01uF 10% 100V
C764	1-163-038-91	■	CERAMIC, CHIP 0.1uF 25V
C765	1-163-275-11	■	CERAMIC, CHIP 0.001uF 5% 50V
C766	1-163-038-91	s	CERAMIC, CHIP 0.1uF 25V
C767	1-163-038-91	s	CERAMIC, CHIP 0.1uF 25V
C768	1-163-038-91	s	CERAMIC, CHIP 0.1uF 25V
C800	1-126-967-11	s	ELECT 47uF 20% 50V
C801	1-163-038-91	s	CERAMIC, CHIP 0.1uF 25V
C802	1-163-038-91	s	CERAMIC, CHIP 0.1uF 25V
C803	1-126-934-11	s	ELECT 220uF 20% 16V
C804	1-126-934-11	s	ELECT 220uF 20% 16V
C805	1-126-934-11	s	ELECT 220uF 20% 16V
C806	1-126-925-11	s	ELECT 470uF 20% 10V
C807-811	1-163-038-91	s	CERAMIC, CHIP 0.1uF 25V
C812	1-126-925-11	s	ELECT 470uF 20% 10V
C813	1-163-038-91	s	CERAMIC, CHIP 0.1uF 25V
C814	1-163-038-91	s	CERAMIC, CHIP 0.1uF 25V
C815	1-163-251-11	■	CERAMIC, CHIP 100pF [illegible] 50V
C816	1-163-038-91	s	CERAMIC, CHIP 0.1uF 25V
C817	1-163-038-91	■	CERAMIC, CHIP 0.1uF 25V
C818-821	1-126-934-11	s	ELECT 220uF 20% 16V
C822-826	1-163-038-91	s	CERAMIC, CHIP 0.1uF 25V
C827	1-163-251-11	s	CERAMIC, CHIP 100pF 5% 50V
C828-831	1-163-038-91	s	CERAMIC, CHIP 0.1uF 25V
C832-836	1-126-933-11	s	ELECT 100uF 20% 16V
C837-842	1-163-038-91	s	CERAMIC, CHIP 0.1uF 25V
C843	1-126-963-11	s	ELECT 4.7uF 20% 50V
C900	1-126-933-11	s	ELECT 100uF 20% 16V
C901	1-163-038-91	s	CERAMIC, CHIP 0.1uF 25V
C902	1-163-038-91	s	CERAMIC, CHIP 0.1uF 25V
C903	1-163-038-91	s	CERAMIC, CHIP 0.1uF 25V
C904	1-163-239-11	s	CERAMIC, CHIP 33pF 5% 50V
C905	1-163-038-91	s	CERAMIC, CHIP 0.1uF 25V
C906	1-163-239-11	s	CERAMIC, CHIP 33pF 5% 50V

(AD-115A BOARD(ES-7(CE)))

Ref. No. or Q'ty	Part No.	SP	Description
C907	1-163-251-11	s	CERAMIC, CHIP 100pF [illegible] 50V
C908	1-163-038-91	s	CERAMIC, CHIP 0.1uF 25V
C909	1-163-239-11	■	CERAMIC, CHIP 33pF 5% 50V
C910	1-126-967-11	s	ELECT 47uF 20% 50V
C911	1-163-235-11	s	CERAMIC, CHIP 22pF 5% 50V
C912	1-126-964-11	s	ELECT 10uF 20% 50V
C913	1-163-239-11	■	CERAMIC, CHIP 33pF [illegible] 50V
C914	1-163-038-91	s	CERAMIC, CHIP 0.1uF 25V
C915	1-163-121-00	s	CERAMIC, CHIP 150pF 5% 50V
C916	1-163-239-11	■	CERAMIC, CHIP 33pF 5% 50V
C917	1-163-251-11	■	CERAMIC, CHIP 100pF 5% 50V
C918-923	1-163-038-91	s	CERAMIC, CHIP 0.1uF 25V
C924	1-163-275-11	s	CERAMIC, CHIP 0.001uF 5% 50V
C925	1-163-251-11	s	CERAMIC, CHIP 100pF 5% 50V
C926	1-163-038-91	s	CERAMIC, CHIP 0.1uF 25V
C927	1-163-235-11	s	CERAMIC, CHIP 22pF 5% 50V
C928	1-163-275-11	s	CERAMIC, CHIP 0.001uF 5% 50V
C929	1-163-038-91	■	CERAMIC, CHIP 0.1uF 25V
C930	1-163-275-11	s	CERAMIC, CHIP 0.001uF [illegible] 50V
C931	1-164-232-11	s	CERAMIC, CHIP 0.01uF 10% 100V
C932	1-126-964-11	s	ELECT 10uF 20% 50V
C933	1-163-038-91	s	CERAMIC, CHIP 0.1uF 25V
C934	1-163-038-91	s	CERAMIC, CHIP 0.1uF 25V
C935	1-126-963-11	■	ELECT 4.7uF 20% 50V
C936	1-126-933-11	s	ELECT 100uF 20% 16V
C937	1-164-232-11	s	CERAMIC, CHIP 0.01uF 10% 100V
C938	1-124-903-11	s	ELECT 1uF 20% 50V
C939	1-163-809-11	s	CERAMIC, CHIP 0.047uF 10% 25V
C940	1-163-809-11	s	CERAMIC, CHIP 0.047uF 10% 25V
C941	1-163-038-91	s	CERAMIC, CHIP 0.1uF 25V
C942	1-163-037-11	s	CERAMIC, CHIP 0.022uF 10% 25V
C943	1-163-224-11	s	CERAMIC, CHIP 7pF 50V
C944	1-163-038-91	s	CERAMIC, CHIP 0.1uF 25V
C945	1-126-933-11	■	ELECT 100uF 20% 16V
C946	1-131-351-00	s	TANTALUM 4.7uF 10% 35V
C947	1-163-275-11	s	CERAMIC, CHIP 0.001uF 5% 50V
C948	1-163-275-11	■	CERAMIC, CHIP 0.001uF 5% 50V
C949	1-163-227-11	■	CERAMIC, CHIP 10pF 5% 50V
C950	1-164-232-11	■	CERAMIC, CHIP 0.01uF 10% 100V
C951	1-163-038-91	s	CERAMIC, CHIP 0.1uF 25V
C952	1-163-275-11	■	CERAMIC, CHIP 0.001uF [illegible] 50V
C953	1-163-224-11	s	CERAMIC, CHIP 7pF 50V
C954	1-163-237-11	s	CERAMIC, CHIP 27pF 5% 50V
C955	1-163-237-11	s	CERAMIC, CHIP 27pF 5% 50V
C956	1-126-967-11	■	ELECT 47uF 20% 50V
C957	1-126-967-11	s	ELECT 47uF 20% 50V
C958	1-163-227-11	■	CERAMIC, CHIP 10pF 5% 50V
C959	1-163-227-11	s	CERAMIC, CHIP 10pF 5% 50V
C960	1-163-235-11	s	CERAMIC, CHIP 22pF 5% 50V
C961	1-163-235-11	s	CERAMIC, CHIP 22pF 5% 50V
C964	1-126-933-11	■	ELECT 100uF 20% 16V
C965	1-126-933-11	■	ELECT 100uF 20% 16V
C966	1-163-235-11	s	CERAMIC, CHIP 22pF [illegible] 50V
C967	1-163-235-11	s	CERAMIC, CHIP 22pF [illegible] 50V
C968	1-163-037-11	s	CERAMIC, CHIP 0.022uF 10% 25V
C969	1-163-038-91	s	CERAMIC, CHIP 0.1uF 25V
C970	1-163-037-11	■	CERAMIC, CHIP 0.022uF 10% 25V
C971	1-163-038-91	■	CERAMIC, CHIP 0.1uF 25V
C972	1-126-933-11	s	ELECT 100uF 20% 16V

(AD-115A BOARD(ES-7(CE)))

Ref. No. or Q'ty	Part No.	SP	Description
C973	1-126-933-11	■	ELECT 100uF 20% 16V
C974	1-163-038-91	s	CERAMIC, CHIP 0.1uF 25V
C975	1-163-038-91	s	CERAMIC, CHIP 0.1uF 25V
C976	1-163-239-11	■	CERAMIC, CHIP 33pF ■ 50V
C977	1-163-038-91	■	CERAMIC, CHIP 0.1uF 25V
C978	1-163-239-11	s	CERAMIC, CHIP 33pF 5% 50V
C979	1-163-038-91	s	CERAMIC, CHIP 0.1uF 25V
C980	1-163-239-11	s	CERAMIC, CHIP 33pF 5% 50V
C981	1-126-967-11	■	ELECT 47uF 20% 50V
C982	1-163-235-11	s	CERAMIC, CHIP 22pF 5% 50V
C983	1-126-964-11	s	ELECT 10uF 20% 50V
C984	1-163-239-11	s	CERAMIC, CHIP 33pF 5% 50V
C985	1-163-038-91	s	CERAMIC, CHIP 0.1uF 25V
C986	1-163-121-00	s	CERAMIC, CHIP 150pF 5% 50V
C987	1-163-239-11	■	CERAMIC, CHIP 33pF ■ 50V
C988	1-163-251-11	s	CERAMIC, CHIP 100pF 5% 50V
C989	1-163-038-91	s	CERAMIC, CHIP 0.1uF 25V
C995	1-163-275-11	s	CERAMIC, CHIP 0.001uF 5% 50V
C996	1-163-251-11	s	CERAMIC, CHIP 100pF 5% 50V
C997	1-163-038-91	s	CERAMIC, CHIP 0.1uF 25V
C998	1-163-235-11	s	CERAMIC, CHIP 22pF 5% 50V
C999	1-163-038-91	s	CERAMIC, CHIP 0.1uF 25V
C1000	1-163-275-11	s	CERAMIC, CHIP 0.001uF ■ 50V
C1001	1-163-275-11	s	CERAMIC, CHIP 0.001uF 5% 50V
C1002	1-164-232-11	s	CERAMIC, CHIP 0.01uF 10% 100V
C1003	1-126-964-11	s	ELECT 10uF 20% 50V
C1004	1-163-038-91	■	CERAMIC, CHIP 0.1uF 25V
C1005	1-163-038-91	s	CERAMIC, CHIP 0.1uF 25V
C1006	1-126-963-11	■	ELECT 4.7uF 20% 50V
C1007	1-124-903-11	s	ELECT 1uF 20% 50V
C1008	1-126-933-11	s	ELECT 100uF 20% 16V
C1009	1-164-232-11	■	CERAMIC, CHIP 0.01uF 10% 100V
C1010	1-163-809-11	s	CERAMIC, CHIP 0.047uF 10% 25V
C1011	1-163-809-11	s	CERAMIC, CHIP 0.047uF 10% 25V
C1015	1-163-224-11	s	CERAMIC, CHIP 7pF 50V
C1016	1-164-232-11	s	CERAMIC, CHIP 0.01uF 10% 100V
C1017	1-126-933-11	s	ELECT 100uF 20% 16V
C1018	1-131-351-00	s	TANTALUM 4.7uF 10% 35V
C1019	1-163-275-11	s	CERAMIC, CHIP 0.001uF 5% 50V
C1020	1-163-275-11	■	CERAMIC, CHIP 0.001uF 5% 50V
C1021	1-163-227-11	s	CERAMIC, CHIP 10pF 5% 50V
C1022	1-163-038-91	■	CERAMIC, CHIP 0.1uF 25V
C1023	1-163-275-11	s	CERAMIC, CHIP 0.001uF 5% 50V
C1024	1-163-224-11	s	CERAMIC, CHIP 7pF 50V
C1025	1-163-237-11	s	CERAMIC, CHIP 27pF 5% 50V
C1026	1-163-237-11	s	CERAMIC, CHIP 27pF ■■ 50V
C1027	1-126-967-11	s	ELECT 47uF 20% 50V
C1028	1-126-967-11	s	ELECT 47uF 20% 50V
C1029	1-163-227-11	s	CERAMIC, CHIP 10pF 5% 50V
C1030	1-163-227-11	s	CERAMIC, CHIP 10pF 5% 50V
C1031	1-163-235-11	s	CERAMIC, CHIP 22pF ■■ 50V
C1032	1-163-235-11	s	CERAMIC, CHIP 22pF 5% 50V
C1035	1-126-933-11	■	ELECT 100uF 20% 16V
C1036	1-126-933-11	s	ELECT 100uF 20% 16V
C1037	1-163-235-11	s	CERAMIC, CHIP 22pF 5% 50V
C1038	1-163-235-11	s	CERAMIC, CHIP 22pF 5% 50V
C1043	1-126-933-11	s	ELECT 100uF 20% 16V
C1044	1-126-933-11	s	ELECT 100uF 20% 16V
C1045	1-163-038-91	■	CERAMIC, CHIP 0.1uF 25V

(AD-115A BOARD(ES-7(CE)))

Ref. No. or Q'ty	Part No.	SP	Description
C1046	1-163-038-91	■	CERAMIC, CHIP 0.1uF 25V
C1047	1-163-251-11	s	CERAMIC, CHIP 100pF 5% 50V
C1048-1051	1-163-227-11	s	CERAMIC, CHIP 10pF 5% 50V
C1052	1-163-038-91	s	CERAMIC, CHIP 0.1uF 25V
C1053	1-163-038-91	s	CERAMIC, CHIP 0.1uF 25V
C1054	1-163-224-11	■	CERAMIC, CHIP 7pF 50V
C1055	1-163-224-11	s	CERAMIC, CHIP 7pF 50V
C1056-1059	1-163-227-11	■	CERAMIC, CHIP 10pF 5% 50V
C1060	1-163-038-91	s	CERAMIC, CHIP 0.1uF 25V
C1061	1-163-038-91	s	CERAMIC, CHIP 0.1uF 25V
C1062	1-163-224-11	s	CERAMIC, CHIP 7pF 50V
C1063	1-163-224-11	s	CERAMIC, CHIP 7pF 50V
CN10	1-766-239-11	o	CONNECTOR, CIRCULAR 4P(S), FEMALE
CN11	1-774-965-11	o	CONNECTOR, 3-BNC, FEMALE
CN20	1-766-239-11	o	CONNECTOR, CIRCULAR 4P(S), FEMALE
CN21	1-774-965-11	o	CONNECTOR, 3-BNC, FEMALE
CN31	1-774-966-11	o	CONNECTOR, 4-BNC, FEMALE
CN40	1-766-239-11	o	CONNECTOR, CIRCULAR 4P(S), FEMALE
CN41	1-774-965-11	o	CONNECTOR, 3-BNC, FEMALE
CN501	1-778-261-11	o	CONNECTOR, BB 124P, MALE
CN503	1-778-261-11	o	CONNECTOR, BB 124P, MALE
CV200	1-141-373-11	s	CAP, TRIMMER, CHIP 10pF
CV500	1-141-373-11	s	CAP, TRIMMER, CHIP 10pF
D200-204	8-719-024-81	s	DIODE 1SS300-TE85L
D400	8-719-024-81	s	DIODE 1SS300-TE85L
D401	8-719-024-81	s	DIODE 1SS300-TE85L
D402	8-719-024-81	s	DIODE 1SS300-TE85L
D404	8-719-049-03	s	DIODE KV1851A-1
D405	8-719-049-03	s	DIODE KV1851A-1
D500-504	8-719-024-81	s	DIODE 1SS300-TE85L
D700	8-719-024-81	■	DIODE 1SS300-TE85L
D701	8-719-024-81	■	DIODE 1SS300-TE85L
D702	8-719-024-81	■	DIODE 1SS300-TE85L
D704	8-719-049-03	s	DIODE KV1851A-1
D705	8-719-049-03	■	DIODE KV1851A-1
FB100-137	1-500-184-11	s	BEAD, FERRITE
FB804	1-500-184-11	s	BEAD, FERRITE
FB805	1-500-184-11	s	BEAD, FERRITE
FB806-809	1-500-202-11	s	BEAD, FERRITE
FL200	1-239-085-11	s	FILTER, LOW-PASS
FL201	1-239-085-11	s	FILTER, LOW-PASS
FL202	1-239-085-11	s	FILTER, LOW-PASS
FL203	1-236-716-11	s	FILTER, LOW-PASS
FL204	1-233-248-11	s	FILTER, LOW-PASS
FL205	1-233-248-11	s	FILTER, LOW-PASS
FL300	1-233-614-11	s	FILTER, LOW-PASS
FL301	1-233-599-11	s	FILTER, LOW-PASS
FL302	1-233-599-11	s	FILTER, LOW-PASS
FL303	1-239-642-21	s	EMIFIL ARRAY, CHIP
FL304	1-239-642-21	■	EMIFIL ARRAY, CHIP
FL400	1-239-642-21	s	EMIFIL ARRAY, CHIP
FL500	1-239-085-11	s	FILTER, LOW-PASS

(AD-115A BOARD (ES-7(CE)))

Ref. No. or Q'ty	Part No.	SP	Description
FL501	1-239-085-11	s	FILTER, LOW-PASS
FL502	1-239-085-11	s	FILTER, LOW-PASS
FL503	1-236-716-11	s	FILTER, LOW-PASS
FL504	1-233-248-11	s	FILTER, LOW-PASS
FL505	1-233-248-11	s	FILTER, LOW-PASS
FL600	1-233-614-11	s	FILTER, LOW-PASS
FL601	1-233-599-11	s	FILTER, LOW-PASS
FL602	1-233-599-11	s	FILTER, LOW-PASS
FL603	1-239-642-21	s	EMIFIL ARRAY, CHIP
FL604	1-239-642-21	s	EMIFIL ARRAY, CHIP
FL700	1-239-642-21	s	EMIFIL ARRAY, CHIP
IC100	8-759-710-62	s	IC NJM2246M
IC101	8-759-710-62	s	IC NJM2246M
IC102	8-759-711-32	s	IC NJM2245M
IC103	8-759-711-32	s	IC NJM2245M
IC104	8-759-710-62	s	IC NJM2246M
IC105	8-759-710-62	s	IC NJM2246M
IC106	8-752-052-82	s	IC CXA1432M
IC107	8-759-710-62	s	IC NJM2246M
IC108	8-759-009-07	s	IC MC14053BF
IC109	8-759-711-32	s	IC NJM2245M
IC110	8-759-711-32	s	IC NJM2245M
IC111	8-759-711-32	s	IC NJM2245M
IC112	8-759-009-07	s	IC MC14053BF
IC113	8-759-711-32	■	IC NJM2245M
IC114	8-759-711-32	s	IC NJM2245M
IC115	8-759-711-32	s	IC NJM2245M
IC116	8-759-009-07	s	IC MC14053BF
IC117	8-759-514-57	s	IC BA7046F
IC118	8-759-710-12	s	IC NJM2230M
IC119	8-759-035-90	s	IC TC7S02F
IC120	8-759-987-27	s	IC LM1881M
IC125	8-759-925-76	■	IC SN74HC08ANS
IC200	8-759-111-69	s	IC UPC1037HA
IC201	8-752-334-55	s	IC CXD1175M
IC202	8-752-342-61	s	IC CXD2105AQ
IC203	8-759-256-44	s	IC NJM2235M-TE2
IC204	8-759-256-44	s	IC NJM2235M-TE2
IC205	8-759-234-77	s	IC TC4S66F
IC206	8-759-271-04	s	IC LT1252CS8
IC207	8-759-987-27	s	IC LM1881M
IC208	8-759-239-58	s	IC TC74HC221AF
IC209	8-759-983-69	s	IC LM358PS
IC210	8-759-925-90	s	IC SN74HC74ANS
IC211	8-759-926-07	s	IC SN74HC132ANS
IC212	8-759-710-86	s	IC NJM2233BM-T1
IC213	8-759-710-86	s	IC NJM2233BM-T1
IC214	8-759-239-58	s	IC TC74HC221AF
IC215	8-759-926-07	s	IC SN74HC132ANS
IC216	8-759-980-04	■	IC LM311PS
IC217	8-759-603-54	s	IC M51271FP
IC218	8-759-271-04	s	IC LT1252CS8
IC219	8-759-271-04	s	IC LT1252CS8
IC222	8-759-231-32	s	IC TC7S00F
IC300	8-759-710-86	s	IC NJM2233BM-T1
IC301	8-759-271-04	s	IC LT1252CS8
IC302	8-759-908-15	s	IC TL431CLP
IC303	8-759-981-48	s	IC NJM082M

(AD-115A BOARD(ES-7(CE)))

Ref. No. or Q'ty	Part No.	SP	Description
IC304	8-759-710-86	s	IC NJM2233BM-T1
IC305	8-759-271-04	s	IC LT1252CS8
IC306	8-759-710-86	s	IC NJM2233BM-T1
IC307	8-759-271-04	s	IC LT1252CS8
IC308	8-759-925-74	s	IC TC74HC04ANS
IC309	8-759-926-82	s	IC SN74HC574ANS
IC310	8-759-926-82	s	IC SN74HC574ANS
IC311	8-759-926-82	s	IC SN74HC574ANS
IC312	8-759-926-82	s	IC SN74HC574ANS
IC313	8-759-515-12	■	IC SN74ALS574BNS
IC314	8-759-386-44	s	IC TLC5733IPW
IC315	8-759-926-82	s	IC SN74HC574ANS
IC316	8-759-515-12	s	IC SN74ALS574BNS
IC400	8-759-256-44	s	IC NJM2235M-TE2
IC401	8-759-980-04	s	IC LM311PS
IC402	8-759-987-27	s	IC LM1881M
IC403	8-759-239-58	■	IC TC74HC221AF
IC404	8-759-239-58	s	IC TC74HC221AF
IC405	8-759-239-58	s	IC TC74HC221AF
IC406	8-759-926-24	s	IC SN74HC164ANS
IC407	8-759-925-85	■	IC SN74HC32ANS
IC408	8-759-916-23	s	IC SN74HC27N
IC409	8-759-037-79	s	IC MC74HC163AF
IC410	8-759-037-79	s	IC MC74HC163AF
IC411	8-759-037-79	s	IC MC74HC163AF
IC412	8-759-925-78	■	IC SN74HC10ANS
IC413	8-759-925-74	s	IC TC74HC04ANS
IC414	8-759-925-81	s	IC SN74HC20ANS
IC415	8-759-927-46	s	IC SN74HC00ANS
IC416	8-759-981-48	s	IC NJM082M
IC417	8-759-981-48	s	IC NJM082M
IC418	8-759-926-48	■	IC SN74HC244NS
IC419	8-759-925-90	■	IC SN74HC74ANS
IC420	8-759-239-58	■	IC TC74HC221AF
IC421	8-759-926-29	s	IC SN74HC175ANS
IC422	8-759-926-24	s	IC SN74HC164ANS
IC423	8-759-927-46	s	IC SN74HC00ANS
IC424	8-759-239-58	s	IC TC74HC221AF
IC425	8-759-926-24	s	IC SN74HC164ANS
IC426	8-759-926-24	s	IC SN74HC164ANS
IC427	8-759-925-90	s	IC SN74HC74ANS
IC434	8-759-925-74	s	IC TC74HC04ANS
IC435	8-759-359-54	s	IC SN74ALS244CNS-E20
IC501	8-752-334-55	s	IC CXD1175M
IC502	8-752-342-61	s	IC CXD2105AQ
IC503	8-759-256-44	s	IC NJM2235M-TE2
IC504	8-759-256-44	s	IC NJM2235M-TE2
IC505	8-759-111-69	s	IC UPC1037HA
IC506	8-759-271-04	s	IC LT1252CS8
IC507	8-759-987-27	s	IC LM1881M
IC508	8-759-239-58	■	IC TC74HC221AF
IC509	8-759-234-77	s	IC TC4S66F
IC510	8-759-983-69	■	IC LM358PS
IC511	8-759-925-90	s	IC SN74HC74ANS
IC512	8-759-710-86	s	IC NJM2233BM-T1
IC513	8-759-710-86	s	IC NJM2233BM-T1
IC514	8-759-239-58	s	IC TC74HC221AF
IC515	8-759-926-07	s	IC SN74HC132ANS
IC516	8-759-980-04	■	IC LM311PS

(AD-115A BOARD(ES-7(CE)))

Ref. No. or Q'ty	Part No.	SP	Description
IC517	8-759-603-54	s	IC M51271FP
IC518	8-759-271-04	■	IC LT1252CS8
IC519	8-759-271-04	s	IC LT1252CS8
IC520	8-759-926-07	s	IC SN74HC132ANS
IC521	8-759-231-32	s	IC TC7S00F
IC600	8-759-710-86	s	IC NJM2233BM-T1
IC601	8-759-271-04	s	IC LT1252CS8
IC602	8-759-908-15	■	IC TL431CLP
IC603	8-759-981-48	s	IC NJM082M
IC604	8-759-710-86	s	IC NJM2233BM-T1
IC605	8-759-271-04	s	IC LT1252CS8
IC606	8-759-710-86	s	IC NJM2233BM-T1
IC607	8-759-271-04	■	IC LT1252CS8
IC608	8-759-925-74	s	IC TC74HC04ANS
IC609	8-759-926-82	s	IC SN74HC574ANS
IC610	8-759-926-82	s	IC SN74HC574ANS
IC611	8-759-926-82	s	IC SN74HC574ANS
IC612	8-759-926-82	s	IC SN74HC574ANS
IC613	8-759-515-12	■	IC SN74ALS574BNS
IC614	8-759-386-44	s	IC TLC5733IPM
IC615	8-759-926-82	s	IC SN74HC574ANS
IC616	8-759-515-12	s	IC SN74ALS574BNS
IC700	8-759-256-44	s	IC NJM2235M-TE2
IC701	8-759-980-04	s	IC LM311PS
IC702	8-759-987-27	s	IC LM1881M
IC703	8-759-239-58	s	IC TC74HC221AF
IC704	8-759-239-58	s	IC TC74HC221AF
IC705	8-759-239-58	s	IC TC74HC221AF
IC706	8-759-926-24	■	IC SN74HC164ANS
IC707	8-759-925-74	s	IC TC74HC04ANS
IC708	8-759-925-85	s	IC SN74HC32ANS
IC709	8-759-037-79	s	IC MC74HC163AF
IC710	8-759-037-79	s	IC MC74HC163AF
IC711	8-759-037-79	s	IC MC74HC163AF
IC712	8-759-925-78	s	IC SN74HC10ANS
IC713	8-759-925-74	s	IC TC74HC04ANS
IC714	8-759-925-81	s	IC SN74HC20ANS
IC715	8-759-927-46	s	IC SN74HC00ANS
IC716	8-759-981-48	s	IC NJM082M
IC717	8-759-981-48	■	IC NJM082M
IC718	8-759-926-48	s	IC SN74HC244NS
IC719	8-759-925-90	s	IC SN74HC74ANS
IC720	8-759-239-58	s	IC TC74HC221AF
IC721	8-759-926-29	s	IC SN74HC175ANS
IC722	8-759-926-24	s	IC SN74HC164ANS
IC723	8-759-927-46	s	IC SN74HC00ANS
IC724	8-759-239-58	s	IC TC74HC221AF
IC725	8-759-926-24	s	IC SN74HC164ANS
IC726	8-759-926-24	s	IC SN74HC164ANS
IC727	8-759-925-90	s	IC SN74HC74ANS
IC800	8-759-157-17	s	IC PQ05SZ1U
IC801	8-759-157-17	s	IC PQ05SZ1U
IC802	8-759-701-59	s	IC NJM78M09FA
IC803	8-759-701-84	s	IC NJM7905FA
IC804	8-759-987-27	s	IC LM1881M
IC805	8-759-239-58	s	IC TC74HC221AF
IC806	8-759-927-12	s	IC SN74HCT244ANS
IC807	8-759-926-24	s	IC SN74HC164ANS
IC808	8-759-926-82	s	IC SN74HC574ANS

(AD-115A BOARD(ES-7(CE)))

Ref. No. or Q'ty	Part No.	SP	Description
IC809	8-759-925-90	s	IC SN74HC74ANS
IC810	8-759-926-24	s	IC SN74HC164ANS
IC811	8-759-926-82	s	IC SN74HC574ANS
IC812	8-759-035-93	s	IC TC7S32F-TE85L
L100	1-410-482-31	s	INDUCTOR 100uH
L101	1-410-482-31	s	INDUCTOR 100uH
L102	1-408-419-00	s	INDUCTOR 68uH
L103-111	1-410-482-31	s	INDUCTOR 100uH
L200	1-410-482-31	s	INDUCTOR 100uH
L201	1-410-482-31	■	INDUCTOR 100uH
L202	1-410-482-31	■	INDUCTOR 100uH
L203	1-410-478-11	■	INDUCTOR 47uH
L204	1-410-478-11	s	INDUCTOR 47uH
L205	1-410-478-11	s	INDUCTOR 47uH
L206	1-410-482-31	s	INDUCTOR 100uH
L207	1-410-470-11	s	INDUCTOR 10uH
L208	1-410-464-11	■	INDUCTOR 3.3uH
L209	1-410-482-31	s	INDUCTOR 100uH
L210	1-410-482-31	s	INDUCTOR 100uH
L211	1-410-478-11	s	INDUCTOR 47uH
L212	1-408-425-00	s	INDUCTOR 220uH
L213	1-408-425-00	■	INDUCTOR 220uH
L214	1-410-478-11	■	INDUCTOR 47uH
L215	1-410-478-11	■	INDUCTOR 47uH
L216	1-410-478-11	s	INDUCTOR 47uH
L217	1-408-429-00	s	INDUCTOR 470uH
L218	1-410-482-31	s	INDUCTOR 100uH
L219	1-408-414-00	s	INDUCTOR 27uH
L220	1-408-414-00	s	INDUCTOR 27uH
L221	1-410-478-11	s	INDUCTOR 47uH
L222	1-410-478-11	■	INDUCTOR 47uH
L223	1-410-482-31	■	INDUCTOR 100uH
L224	1-410-482-31	s	INDUCTOR 100uH
L300-305	1-410-482-31	■	INDUCTOR 100uH
L306	1-410-478-11	s	INDUCTOR 47uH
L307	1-408-397-00	s	INDUCTOR 1uH
L400	1-408-419-00	s	INDUCTOR 68uH
L401	1-410-478-11	s	INDUCTOR 47uH
L402	1-410-478-11	s	INDUCTOR 47uH
L403	1-408-397-00	s	INDUCTOR 1uH
L404	1-408-397-00	s	INDUCTOR 1uH
L500	1-410-478-11	s	INDUCTOR 47uH
L501	1-410-482-31	s	INDUCTOR 100uH
L502	1-410-482-31	s	INDUCTOR 100uH
L503	1-408-425-00	s	INDUCTOR 220uH
L504	1-408-425-00	s	INDUCTOR 220uH
L505	1-410-482-31	s	INDUCTOR 100uH
L506-511	1-410-478-11	s	INDUCTOR 47uH
L512	1-408-429-00	s	INDUCTOR 470uH
L513	1-410-482-31	s	INDUCTOR 100uH
L514	1-410-482-31	s	INDUCTOR 100uH
L515	1-408-414-00	s	INDUCTOR 27uH
L516	1-408-414-00	s	INDUCTOR 27uH
L517	1-410-478-11	s	INDUCTOR 47uH
L518	1-410-478-11	s	INDUCTOR 47uH
L519	1-410-470-11	s	INDUCTOR 10uH
L520	1-410-464-11	s	INDUCTOR 3.3uH
L521	1-410-482-31	■	INDUCTOR 100uH
L522	1-410-482-31	■	INDUCTOR 100uH

(AD-115A BOARD(ES-7(CE)))

Ref. No. or Q'ty	Part No.	SP	Description
L523	1-410-482-31	s	INDUCTOR 100uH
L524	1-410-482-31	s	INDUCTOR 100uH
L600-605	1-410-482-31	■	INDUCTOR 100uH
L606	1-410-478-11	s	INDUCTOR 47uH
L607	1-408-397-00	s	INDUCTOR 1uH
L700	1-408-419-00	s	INDUCTOR 68uH
L701	1-410-478-11	s	INDUCTOR 47uH
L702	1-410-478-11	s	INDUCTOR 47uH
L703	1-408-397-00	s	INDUCTOR 1uH
L800-803	1-412-525-31	s	INDUCTOR 10uH
L804	1-410-482-31	s	INDUCTOR 100uH
L805	1-408-397-00	s	INDUCTOR 1uH
LV400	1-410-286-11	s	INDUCTOR, VAR 1uH
LV700	1-410-286-11	s	INDUCTOR, VAR 1uH
PS800 ⚠	1-532-675-21	s	LINK, IC 1.5A
PS801 ⚠	1-532-675-21	s	LINK, IC 1.5A
PS802 ⚠	1-532-675-21	■	LINK, IC 1.5A
PS803 ⚠	1-532-675-21	■	LINK, IC 1.5A
Q100	8-729-117-32	■	TRANSISTOR 2SC4177
Q101	8-729-117-32	s	TRANSISTOR 2SC4177
Q102	8-729-117-32	s	TRANSISTOR 2SC4177
Q103	8-729-140-63	■	TRANSISTOR 2SA1611-M5M6
Q104	8-729-140-63	s	TRANSISTOR 2SA1611-M5M6
Q105	8-729-117-32	s	TRANSISTOR 2SC4177
Q106	8-729-140-63	s	TRANSISTOR 2SA1611-M5M6
Q107	8-729-028-91	s	TRANSISTOR DTA144EUA-T106
Q108	8-729-029-14	■	TRANSISTOR DTC144EUA-T106
Q109	8-729-117-32	s	TRANSISTOR 2SC4177
Q110	8-729-117-32	s	TRANSISTOR 2SC4177
Q111	8-729-140-63	s	TRANSISTOR 2SA1611-M5M6
Q112	8-729-117-32	s	TRANSISTOR 2SC4177
Q113	8-729-117-32	s	TRANSISTOR 2SC4177
Q114	8-729-903-10	s	TRANSISTOR FMW1
Q115	8-729-902-96	■	TRANSISTOR FMS1
Q116-125	8-729-117-32	s	TRANSISTOR 2SC4177
Q126	8-729-907-26	s	TRANSISTOR IMX1
Q127-133	8-729-117-32	s	TRANSISTOR 2SC4177
Q134	8-729-907-26	s	TRANSISTOR IMX1
Q135-138	8-729-117-32	s	TRANSISTOR 2SC4177
Q200	8-729-140-63	■	TRANSISTOR 2SA1611-M5M6
Q201	8-729-117-32	s	TRANSISTOR 2SC4177
Q202	8-729-117-32	s	TRANSISTOR 2SC4177
Q203	8-729-117-32	s	TRANSISTOR 2SC4177
Q204	8-729-116-64	s	TRANSISTOR 2SK508-K51
Q205	8-729-904-41	s	TRANSISTOR FMY3
Q206	8-729-029-14	s	TRANSISTOR DTC144EUA-T106
Q207	8-729-029-14	s	TRANSISTOR DTC144EUA-T106
Q208	8-729-117-32	s	TRANSISTOR 2SC4177
Q209	8-729-117-32	s	TRANSISTOR 2SC4177
Q210	8-729-117-32	s	TRANSISTOR 2SC4177
Q211	8-729-140-63	s	TRANSISTOR 2SA1611-M5M6
Q212	8-729-117-32	s	TRANSISTOR 2SC4177
Q213	8-729-117-32	s	TRANSISTOR 2SC4177
Q214	8-729-140-63	s	TRANSISTOR 2SA1611-M5M6
Q215	8-729-117-32	s	TRANSISTOR 2SC4177
Q216	8-729-140-63	s	TRANSISTOR 2SA1611-M5M6

(AD-115A BOARD(ES-7(CE)))

Ref. No. or Q'ty	Part No.	SP	Description
Q217	8-729-117-32	s	TRANSISTOR 2SC4177
Q218	8-729-117-32	■	TRANSISTOR 2SC4177
Q219	8-729-117-32	■	TRANSISTOR 2SC4177
Q220	8-729-140-63	s	TRANSISTOR 2SA1611-M5M6
Q221-225	8-729-117-32	s	TRANSISTOR 2SC4177
Q226-229	8-729-140-63	s	TRANSISTOR 2SA1611-M5M6
Q230	8-729-117-32	s	TRANSISTOR 2SC4177
Q231	8-729-117-32	s	TRANSISTOR 2SC4177
Q232	8-729-117-32	s	TRANSISTOR 2SC4177
Q233	8-729-029-14	s	TRANSISTOR DTC144EUA-T106
Q300	8-729-117-32	s	TRANSISTOR 2SC4177
Q301	8-729-117-32	s	TRANSISTOR 2SC4177
Q302	8-729-140-63	s	TRANSISTOR 2SA1611-M5M6
Q303	8-729-117-32	s	TRANSISTOR 2SC4177
Q304	8-729-904-41	■	TRANSISTOR FMY3
Q305	8-729-117-32	s	TRANSISTOR 2SC4177
Q306	8-729-140-63	s	TRANSISTOR 2SA1611-M5M6
Q307	8-729-117-32	■	TRANSISTOR 2SC4177
Q308	8-729-117-32	s	TRANSISTOR 2SC4177
Q309	8-729-140-63	s	TRANSISTOR 2SA1611-M5M6
Q310	8-729-117-32	s	TRANSISTOR 2SC4177
Q311	8-729-117-32	s	TRANSISTOR 2SC4177
Q312	8-729-117-32	s	TRANSISTOR 2SC4177
Q313	8-729-140-63	■	TRANSISTOR 2SA1611-M5M6
Q314	8-729-117-32	s	TRANSISTOR 2SC4177
Q400	8-729-117-32	s	TRANSISTOR 2SC4177
Q401	8-729-117-32	s	TRANSISTOR 2SC4177
Q402	8-729-117-32	s	TRANSISTOR 2SC4177
Q403	8-729-140-63	s	TRANSISTOR 2SA1611-M5M6
Q404	8-729-117-32	s	TRANSISTOR 2SC4177
Q405	8-729-140-63	s	TRANSISTOR 2SA1611-M5M6
Q406	8-729-116-64	s	TRANSISTOR 2SK508-K51
Q407	8-729-117-32	s	TRANSISTOR 2SC4177
Q500	8-729-140-63	s	TRANSISTOR 2SA1611-M5M6
Q501	8-729-117-32	s	TRANSISTOR 2SC4177
Q502	8-729-117-32	■	TRANSISTOR 2SC4177
Q503	8-729-117-32	s	TRANSISTOR 2SC4177
Q504	8-729-116-64	s	TRANSISTOR 2SK508-K51
Q505	8-729-904-41	s	TRANSISTOR FMY3
Q506	8-729-029-14	■	TRANSISTOR DTC144EUA-T106
Q507	8-729-029-14	s	TRANSISTOR DTC144EUA-T106
Q508	8-729-117-32	s	TRANSISTOR 2SC4177
Q509	8-729-117-32	s	TRANSISTOR 2SC4177
Q510	8-729-117-32	s	TRANSISTOR 2SC4177
Q511	8-729-140-63	■	TRANSISTOR 2SA1611-M5M6
Q512	8-729-117-32	s	TRANSISTOR 2SC4177
Q513	8-729-117-32	■	TRANSISTOR 2SC4177
Q514	8-729-140-63	■	TRANSISTOR 2SA1611-M5M6
Q515	8-729-117-32	s	TRANSISTOR 2SC4177
Q516	8-729-140-63	■	TRANSISTOR 2SA1611-M5M6
Q517	8-729-117-32	s	TRANSISTOR 2SC4177
Q518	8-729-117-32	s	TRANSISTOR 2SC4177
Q519	8-729-117-32	■	TRANSISTOR 2SC4177
Q520	8-729-140-63	s	TRANSISTOR 2SA1611-M5M6
Q521-525	8-729-117-32	s	TRANSISTOR 2SC4177
Q526-529	8-729-140-63	s	TRANSISTOR 2SA1611-M5M6
Q530	8-729-117-32	■	TRANSISTOR 2SC4177
Q531	8-729-117-32	s	TRANSISTOR 2SC4177
Q532	8-729-117-32	s	TRANSISTOR 2SC4177

(AD-115A BOARD(ES-7(CE)))

Ref. No. or Q'ty	Part No.	SP	Description
Q533	8-729-029-14	s	TRANSISTOR DTC144EUA-T106
Q600	8-729-117-32	s	TRANSISTOR 2SC4177
Q601	8-729-117-32	s	TRANSISTOR 2SC4177
Q602	8-729-140-63	■	TRANSISTOR 2SA1611-M5M6
Q603	8-729-117-32	s	TRANSISTOR 2SC4177
Q604	8-729-904-41	s	TRANSISTOR FMY3
Q605	8-729-117-32	s	TRANSISTOR 2SC4177
Q606	8-729-140-63	s	TRANSISTOR 2SA1611-M5M6
Q607	8-729-117-32	s	TRANSISTOR 2SC4177
Q608	8-729-117-32	s	TRANSISTOR 2SC4177
Q609	8-729-140-63	■	TRANSISTOR 2SA1611-M5M6
Q610	8-729-117-32	s	TRANSISTOR 2SC4177
Q611	8-729-117-32	s	TRANSISTOR 2SC4177
Q612	8-729-117-32	s	TRANSISTOR 2SC4177
Q613	8-729-140-63	s	TRANSISTOR 2SA1611-M5M6
Q614	8-729-117-32	s	TRANSISTOR 2SC4177
Q700	8-729-117-32	s	TRANSISTOR 2SC4177
Q701	8-729-117-32	s	TRANSISTOR 2SC4177
Q702	8-729-117-32	s	TRANSISTOR 2SC4177
Q703	8-729-140-63	s	TRANSISTOR 2SA1611-M5M6
Q704	8-729-117-32	s	TRANSISTOR 2SC4177
Q705	8-729-140-63	s	TRANSISTOR 2SA1611-M5M6
Q706	8-729-116-64	■	TRANSISTOR 2SK508-K51
Q707	8-729-117-32	s	TRANSISTOR 2SC4177
Q800	8-729-117-32	■	TRANSISTOR 2SC4177
R100	1-216-023-00	s	METAL, CHIP 82 5% 1/10W
R101	1-216-013-00	s	METAL, CHIP 33 5% 1/10W
R102	1-216-013-00	s	METAL, CHIP 33 5% 1/10W
R103	1-216-057-00	s	METAL, CHIP 2.2k 5% 1/10W
R104	1-216-013-00	s	METAL, CHIP 33 5% 1/10W
R105	1-216-021-00	s	METAL, CHIP 68 5% 1/10W
R106	1-216-057-00	s	METAL, CHIP 2.2k 5% 1/10W
R107	1-216-021-00	s	METAL, CHIP 68 5% 1/10W
R108	1-216-081-00	s	METAL, CHIP 22k 5% 1/10W
R109-114	1-216-624-11	s	METAL, CHIP 75 0.5% 1/10W
R115	1-216-081-00	s	METAL, CHIP 22k 5% 1/10W
R116	1-216-075-00	s	METAL, CHIP 12k 5% 1/10W
R117	1-216-073-00	s	METAL, CHIP 10k 5% 1/10W
R118	1-216-121-91	s	METAL, CHIP 1M 5% 1/10W
R120	1-216-059-00	s	METAL, CHIP 2.7k 5% 1/10W
R121	1-216-059-00	s	METAL, CHIP 2.7k 5% 1/10W
R122	1-216-687-11	■	METAL, CHIP 33k 0.5% 1/10W
R123	1-218-764-11	s	METAL, CHIP 330k 0.5% 1/10W
R124	1-216-073-00	s	METAL, CHIP 10k 5% 1/10W
R125	1-218-772-11	s	METAL, CHIP 680k 0.5% 1/10W
R127	1-216-295-91	s	RES, CHIP 0
R128	1-216-049-91	s	METAL, CHIP 1k 5% 1/10W
R129	1-216-033-00	s	METAL, CHIP 220 5% 1/10W
R130	1-216-049-91	s	METAL, CHIP 1k 5% 1/10W
R131-142	1-216-033-00	s	METAL, CHIP 220 5% 1/10W
R143	1-216-049-91	s	METAL, CHIP 1k 5% 1/10W
R144	1-216-073-00	s	METAL, CHIP 10k 5% 1/10W
R145	1-216-627-11	s	METAL, CHIP 100 0.5% 1/10W
R146	1-216-649-11	s	METAL, CHIP 820 0.5% 1/10W
R147	1-216-625-11	s	METAL, CHIP 82 0.5% 1/10W
R148	1-216-624-11	■	METAL, CHIP 75 0.5% 1/10W
R149	1-216-624-11	s	METAL, CHIP 75 0.5% 1/10W
R150	1-216-624-11	s	METAL, CHIP 75 0.5% 1/10W
R151-156	1-216-663-11	s	METAL, CHIP 3.3k 0.5% 1/10W

(AD-115A BOARD(ES-7(CE)))

Ref. No. or Q'ty	Part No.	SP	Description
R157	1-216-025-91	■	METAL, CHIP 100 5% 1/10W
R158	1-216-655-11	s	METAL, CHIP 1.5k 0.5% 1/10W
R159	1-216-639-11	s	METAL, CHIP 330 0.5% 1/10W
R160	1-216-603-11	■	METAL, CHIP 10 0.5% 1/10W
R161	1-216-651-11	s	METAL, CHIP 1k 0.5% 1/10W
R162	1-216-049-91	s	METAL, CHIP 1k 5% 1/10W
R163	1-216-635-11	s	METAL, CHIP 220 0.5% 1/10W
R164	1-216-049-91	s	METAL, CHIP 1k 5% 1/10W
R165	1-208-625-11	s	METAL, CHIP 2.25k 0.1% 1/10W
R166	1-208-627-11	s	METAL, CHIP 4.41k 0.1% 1/16W
R167	1-208-630-11	s	METAL, CHIP 11.49 0.1% 1/10W
R168	1-216-625-11	s	METAL, CHIP 82 0.5% 1/10W
R169	1-216-049-91	s	METAL, CHIP 1k 5% 1/10W
R170	1-216-025-91	s	METAL, CHIP 100 5% 1/10W
R171	1-216-025-91	s	METAL, CHIP 100 5% 1/10W
R172	1-208-774-11	s	METAL, CHIP 470 0.5% 1/10W
R173	1-216-057-00	s	METAL, CHIP 2.2k 5% 1/10W
R174	1-216-045-00	s	METAL, CHIP 680 5% 1/10W
R175	1-208-774-11	s	METAL, CHIP 470 0.5% 1/10W
R176	1-216-667-11	■	METAL, CHIP 4.7k 0.5% 1/10W
R177	1-216-627-11	■	METAL, CHIP 100 0.5% 1/10W
R178	1-216-649-11	s	METAL, CHIP 820 0.5% 1/10W
R179	1-216-629-11	s	METAL, CHIP 120 0.5% 1/10W
R180	1-216-655-11	s	METAL, CHIP 1.5k 0.5% 1/10W
R181	1-216-057-00	s	METAL, CHIP 2.2k 5% 1/10W
R182	1-216-649-11	s	METAL, CHIP 820 0.5% 1/10W
R183	1-216-651-11	■	METAL, CHIP 1k 0.5% 1/10W
R184	1-216-057-00	s	METAL, CHIP 2.2k 5% 1/10W
R185	1-216-057-00	s	METAL, CHIP 2.2k 5% 1/10W
R186	1-216-651-11	s	METAL, CHIP 1k 0.5% 1/10W
R187	1-216-627-11	s	METAL, CHIP 100 0.5% 1/10W
R188	1-216-659-11	■	METAL, CHIP 2.2k 0.5% 1/10W
R189	1-216-057-00	s	METAL, CHIP 2.2k 5% 1/10W
R190	1-216-057-00	s	METAL, CHIP 2.2k 5% 1/10W
R191	1-216-627-11	s	METAL, CHIP 100 0.5% 1/10W
R192	1-216-659-11	s	METAL, CHIP 2.2k 0.5% 1/10W
R193	1-216-057-00	s	METAL, CHIP 2.2k 5% 1/10W
R194	1-216-057-00	s	METAL, CHIP 2.2k 5% 1/10W
R195	1-216-625-11	s	METAL, CHIP 82 0.5% 1/10W
R196	1-216-624-11	s	METAL, CHIP 75 0.5% 1/10W
R197	1-216-624-11	s	METAL, CHIP 75 0.5% 1/10W
R198	1-216-624-11	s	METAL, CHIP 75 0.5% 1/10W
R199	1-216-033-00	s	METAL, CHIP 220 5% 1/10W
R200	1-216-073-00	s	METAL, CHIP 10k 5% 1/10W
R201	1-216-025-91	■	METAL, CHIP 100 5% 1/10W
R202	1-216-049-91	s	METAL, CHIP 1k 5% 1/10W
R203	1-216-651-11	■	METAL, CHIP 1k 0.5% 1/10W
R204	1-208-800-11	s	METAL, CHIP 5.6k 0.5% 1/10W
R205	1-216-651-11	s	METAL, CHIP 1k 0.5% 1/10W
R206	1-216-009-00	s	METAL, CHIP 22 5% 1/10W
R207	1-216-041-00	s	METAL, CHIP 470 5% 1/10W
R208	1-216-673-11	■	METAL, CHIP 8.2k 0.5% 1/10W
R209	1-216-009-00	s	METAL, CHIP 22 5% 1/10W
R210	1-216-659-11	s	METAL, CHIP 2.2k 0.5% 1/10W
R211	1-216-649-11	s	METAL, CHIP 820 0.5% 1/10W
R212	1-216-677-11	■	METAL, CHIP 12k 0.5% 1/10W
R213	1-216-657-11	s	METAL, CHIP 1.8k 0.5% 1/10W
R214	1-216-659-11	s	METAL, CHIP 2.2k 0.5% 1/10W
R215	1-216-667-11	s	METAL, CHIP 4.7k 0.5% 1/10W

(AD-115A BOARD(ES-7(CE)))

Ref. No. or Q'ty	Part No.	SP	Description
R216	1-208-822-11	s	METAL, CHIP 47k 0.5% 1/10W
R217	1-216-033-00	s	METAL, CHIP 220 5% 1/10W
R218	1-216-663-11	s	METAL, CHIP 3.3k 0.5% 1/10W
R219	1-216-687-11	s	METAL, CHIP 33k 0.5% 1/10W
R220	1-208-806-11	s	METAL, CHIP 10k 0.5% 1/10W
R221	1-216-077-00	s	METAL, CHIP 15k 5% 1/10W
R222	1-216-651-11	s	METAL, CHIP 1k 0.5% 1/10W
R223	1-216-649-11	■	METAL, CHIP 820 0.5% 1/10W
R224	1-216-667-11	s	METAL, CHIP 4.7k 0.5% 1/10W
R225	1-216-624-11	s	METAL, CHIP 75 0.5% 1/10W
R226	1-216-641-11	s	METAL, CHIP 390 0.5% 1/10W
R227	1-216-025-91	■	METAL, CHIP 100 5% 1/10W
R228	1-208-814-11	s	METAL, CHIP 22k 0.5% 1/10W
R229	1-208-814-11	s	METAL, CHIP 22k 0.5% 1/10W
R231	1-216-667-11	s	METAL, CHIP 4.7k 0.5% 1/10W
R232	1-216-121-91	s	METAL, CHIP 1M [illegible] 1/10W
R233	1-216-637-11	s	METAL, CHIP 270 0.5% 1/10W
R234	1-216-671-11	s	METAL, CHIP 6.8k 0.5% 1/10W
R235	1-216-663-11	s	METAL, CHIP 3.3k 0.5% 1/10W
R236	1-216-657-11	■	METAL, CHIP 1.8k 0.5% 1/10W
R237	1-208-806-11	s	METAL, CHIP 10k 0.5% 1/10W
R238	1-216-667-11	s	METAL, CHIP 4.7k 0.5% 1/10W
R239	1-216-663-11	■	METAL, CHIP 3.3k 0.5% 1/10W
R240	1-216-667-11	■	METAL, CHIP 4.7k 0.5% 1/10W
R241	1-216-671-11	s	METAL, CHIP 6.8k 0.5% 1/10W
R242	1-216-033-00	■	METAL, CHIP 220 5% 1/10W
R243	1-216-033-00	■	METAL, CHIP 220 5% 1/10W
R244	1-216-065-00	s	METAL, CHIP 4.7k 5% 1/10W
R245	1-216-651-11	s	METAL, CHIP 1k 0.5% 1/10W
R246	1-216-651-11	■	METAL, CHIP 1k 0.5% 1/10W
R247	1-208-800-11	s	METAL, CHIP 5.6k 0.5% 1/10W
R248	1-208-800-11	s	METAL, CHIP 5.6k 0.5% 1/10W
R249	1-216-017-91	s	METAL, CHIP 47 5% 1/10W
R250	1-216-651-11	s	METAL, CHIP 1k 0.5% 1/10W
R251	1-216-017-91	s	METAL, CHIP 47 [illegible] 1/10W
R252	1-216-651-11	s	METAL, CHIP 1k 0.5% 1/10W
R253	1-216-057-00	s	METAL, CHIP 2.2k [illegible] 1/10W
R254	1-216-057-00	s	METAL, CHIP 2.2k 5% 1/10W
R255	1-216-017-91	s	METAL, CHIP 47 5% 1/10W
R256	1-216-073-00	s	METAL, CHIP 10k 5% 1/10W
R257	1-216-057-00	s	METAL, CHIP 2.2k 5% 1/10W
R258	1-216-065-00	s	METAL, CHIP 4.7k 5% 1/10W
R259	1-216-025-91	s	METAL, CHIP 100 5% 1/10W
R260	1-216-651-11	s	METAL, CHIP 1k 0.5% 1/10W
R261	1-208-800-11	s	METAL, CHIP 5.6k 0.5% 1/10W
R263	1-216-651-11	s	METAL, CHIP 1k 0.5% 1/10W
R264	1-216-057-00	s	METAL, CHIP 2.2k 5% 1/10W
R265	1-216-021-00	s	METAL, CHIP 68 5% 1/10W
R267	1-208-774-11	s	METAL, CHIP 470 0.5% 1/10W
R269	1-216-642-11	s	METAL, CHIP 430 0.5% 1/10W
R270	1-208-774-11	s	METAL, CHIP 470 0.5% 1/10W
R271	1-216-651-11	s	METAL, CHIP 1k 0.5% 1/10W
R272	1-216-033-00	s	METAL, CHIP 220 5% 1/10W
R273	1-216-627-11	s	METAL, CHIP 100 0.5% 1/10W
R274	1-216-009-00	s	METAL, CHIP 22 [illegible] 1/10W
R276	1-216-021-00	s	METAL, CHIP 68 5% 1/10W
R277	1-216-065-00	s	METAL, CHIP 4.7k [illegible] 1/10W
R278	1-216-651-11	s	METAL, CHIP 1k 0.5% 1/10W
R279	1-216-073-00	s	METAL, CHIP 10k 5% 1/10W

(AD-115A BOARD(ES-7(CE)))

Ref. No. or Q'ty	Part No.	SP	Description
R280	1-216-650-11	s	METAL, CHIP 910 0.5% 1/10W
R281	1-216-651-11	s	METAL, CHIP 1k 0.5% 1/10W
R282	1-216-025-91	■	METAL, CHIP 100 5% 1/10W
R283	1-208-806-11	s	METAL, CHIP 10k 0.5% 1/10W
R284	1-216-081-00	■	METAL, CHIP 22k [illegible] 1/10W
R285	1-216-083-00	s	METAL, CHIP 27k 5% 1/10W
R286	1-216-045-00	s	METAL, CHIP 680 5% 1/10W
R287	1-216-659-11	s	METAL, CHIP 2.2k 0.5% 1/10W
R288	1-216-651-11	s	METAL, CHIP 1k 0.5% 1/10W
R289	1-216-663-11	s	METAL, CHIP 3.3k 0.5% 1/10W
R290	1-216-057-00	s	METAL, CHIP 2.2k 5% 1/10W
R291	1-216-699-11	■	METAL, CHIP 100k 0.5% 1/10W
R292	1-208-812-11	s	METAL, CHIP 18k 0.5% 1/10W
R293	1-216-073-00	s	METAL, CHIP 10k [illegible] 1/10W
R294	1-216-651-11	s	METAL, CHIP 1k 0.5% 1/10W
R295	1-216-049-91	s	METAL, CHIP 1k 5% 1/10W
R296	1-216-699-11	s	METAL, CHIP 100k 0.5% 1/10W
R297	1-216-057-00	s	METAL, CHIP 2.2k 5% 1/10W
R298	1-216-697-91	■	METAL, CHIP 82k 0.5% 1/10W
R299	1-216-635-11	s	METAL, CHIP 220 0.5% 1/10W
R300	1-216-073-00	s	METAL, CHIP 10k [illegible] 1/10W
R301	1-216-025-91	s	METAL, CHIP 100 [illegible] 1/10W
R302	1-216-647-11	s	METAL, CHIP 680 0.5% 1/10W
R303	1-216-635-11	■	METAL, CHIP 220 0.5% 1/10W
R304	1-216-049-91	s	METAL, CHIP 1k 5% 1/10W
R305	1-216-603-11	s	METAL, CHIP 10 0.5% 1/10W
R306	1-216-627-11	s	METAL, CHIP 100 0.5% 1/10W
R307	1-216-659-11	■	METAL, CHIP 2.2k 0.5% 1/10W
R308	1-216-049-91	s	METAL, CHIP 1k [illegible] 1/10W
R309	1-216-639-11	s	METAL, CHIP 330 0.5% 1/10W
R310	1-216-025-91	s	METAL, CHIP 100 [illegible] 1/10W
R311	1-216-639-11	s	METAL, CHIP 330 0.5% 1/10W
R312	1-216-057-00	s	METAL, CHIP 2.2k 5% 1/10W
R313	1-216-073-00	■	METAL, CHIP 10k 5% 1/10W
R314	1-216-049-91	■	METAL, CHIP 1k 5% 1/10W
R315	1-216-650-11	■	METAL, CHIP 910 0.5% 1/10W
R316	1-216-659-11	s	METAL, CHIP 2.2k 0.5% 1/10W
R317	1-216-033-00	s	METAL, CHIP 220 5% 1/10W
R318	1-216-077-00	s	METAL, CHIP 15k 5% 1/10W
R319	1-216-017-91	s	METAL, CHIP 47 [illegible] 1/10W
R320	1-216-057-00	s	METAL, CHIP 2.2k 5% 1/10W
R321	1-216-033-00	s	METAL, CHIP 220 5% 1/10W
R323	1-216-651-11	s	METAL, CHIP 1k 0.5% 1/10W
R324	1-216-648-11	s	METAL, CHIP 750 0.5% 1/10W
R325	1-216-021-00	s	METAL, CHIP [illegible] [illegible] 1/10W
R326	1-216-021-00	s	METAL, CHIP 68 5% 1/10W
R327	1-216-081-00	s	METAL, CHIP 22k [illegible] 1/10W
R328	1-216-081-00	s	METAL, CHIP 22k 5% 1/10W
R329	1-216-073-00	s	METAL, CHIP 10k 5% 1/10W
R330	1-216-025-91	s	METAL, CHIP 100 5% 1/10W
R331	1-216-647-11	s	METAL, CHIP 680 0.5% 1/10W
R332	1-216-651-11	s	METAL, CHIP 1k 0.5% 1/10W
R333	1-216-639-11	s	METAL, CHIP 330 0.5% 1/10W
R334	1-208-814-11	s	METAL, CHIP 22k 0.5% 1/10W
R335	1-216-057-00	s	METAL, CHIP 2.2k 5% 1/10W
R336	1-216-049-91	s	METAL, CHIP 1k [illegible] 1/10W
R337	1-208-814-11	s	METAL, CHIP 22k 0.5% 1/10W
R338	1-216-639-11	s	METAL, CHIP 330 0.5% 1/10W
R339	1-216-639-11	s	METAL, CHIP 330 0.5% 1/10W

(AD-115A BOARD(ES-7(CE)))

Ref. No. or Q'ty	Part No.	SP	Description
R340	1-216-057-00	s	METAL, CHIP 2.2k 5% 1/10W
R341	1-216-073-00	■	METAL, CHIP 10k 5% 1/10W
R342	1-216-049-91	s	METAL, CHIP 1k 5% 1/10W
R343	1-216-650-11	s	METAL, CHIP 910 0.5% 1/10W
R344	1-216-659-11	s	METAL, CHIP 2.2k 0.5% 1/10W
R345	1-216-073-00	s	METAL, CHIP 10k 5% 1/10W
R346	1-216-647-11	■	METAL, CHIP 680 0.5% 1/10W
R347	1-216-651-11	s	METAL, CHIP 1k 0.5% 1/10W
R348	1-216-639-11	s	METAL, CHIP 330 0.5% 1/10W
R349	1-208-814-11	s	METAL, CHIP 22k 0.5% 1/10W
R350	1-216-057-00	s	METAL, CHIP 2.2k 5% 1/10W
R351	1-216-049-91	s	METAL, CHIP 1k 5% 1/10W
R352	1-208-814-11	s	METAL, CHIP 22k 0.5% 1/10W
R353	1-216-639-11	s	METAL, CHIP 330 0.5% 1/10W
R354	1-216-639-11	■	METAL, CHIP 330 0.5% 1/10W
R355	1-216-057-00	s	METAL, CHIP 2.2k 5% 1/10W
R356	1-216-073-00	s	METAL, CHIP 10k 5% 1/10W
R357	1-216-049-91	s	METAL, CHIP 1k 5% 1/10W
R358	1-216-650-11	s	METAL, CHIP 910 0.5% 1/10W
R359	1-216-659-11	s	METAL, CHIP 2.2k 0.5% 1/10W
R360	1-216-021-00	s	METAL, CHIP 68 5% 1/10W
R361	1-216-021-00	■	METAL, CHIP 68 ■ 1/10W
R362	1-216-021-00	s	METAL, CHIP 68 5% 1/10W
R363	1-216-295-91	s	RES, CHIP 0
R364	1-216-295-91	s	RES, CHIP 0
R365	1-216-295-91	s	RES, CHIP 0
R366	1-216-051-00	s	METAL, CHIP 1.2k 5% 1/10W
R367	1-216-051-00	s	METAL, CHIP 1.2k 5% 1/10W
R368	1-216-025-91	s	METAL, CHIP 100 5% 1/10W
R369	1-216-051-00	s	METAL, CHIP 1.2k 5% 1/10W
R370	1-216-025-91	s	METAL, CHIP 100 5% 1/10W
R371	1-216-647-11	s	METAL, CHIP 680 0.5% 1/10W
R372	1-216-659-11	s	METAL, CHIP 2.2k 0.5% 1/10W
R373	1-208-800-11	s	METAL, CHIP 5.6k 0.5% 1/10W
R400	1-216-699-11	s	METAL, CHIP 100k 0.5% 1/10W
R401	1-216-663-11	s	METAL, CHIP 3.3k 0.5% 1/10W
R402	1-216-663-11	s	METAL, CHIP 3.3k 0.5% 1/10W
R403	1-208-806-11	s	METAL, CHIP 10k 0.5% 1/10W
R404	1-208-774-11	s	METAL, CHIP 470 0.5% 1/10W
R405	1-208-806-11	s	METAL, CHIP 10k 0.5% 1/10W
R406	1-216-651-11	s	METAL, CHIP 1k 0.5% 1/10W
R407	1-216-699-11	s	METAL, CHIP 100k 0.5% 1/10W
R408	1-208-806-11	s	METAL, CHIP 10k 0.5% 1/10W
R409	1-216-659-11	s	METAL, CHIP 2.2k 0.5% 1/10W
R410	1-216-657-11	s	METAL, CHIP 1.8k 0.5% 1/10W
R411	1-216-659-11	s	METAL, CHIP 2.2k 0.5% 1/10W
R412	1-216-627-11	s	METAL, CHIP 100 0.5% 1/10W
R413	1-216-021-00	s	METAL, CHIP 68 5% 1/10W
R414	1-216-085-00	s	METAL, CHIP 33k 5% 1/10W
R415	1-218-772-11	s	METAL, CHIP 680k 0.5% 1/10W
R416	1-216-057-00	s	METAL, CHIP 2.2k 5% 1/10W
R417	1-216-687-11	■	METAL, CHIP 33k 0.5% 1/10W
R418	1-216-667-11	s	METAL, CHIP 4.7k 0.5% 1/10W
R419	1-216-689-11	s	METAL, CHIP 39k 0.5% 1/10W
R420	1-208-806-11	s	METAL, CHIP 10k 0.5% 1/10W
R422	1-216-295-91	s	RES, CHIP 0
R423	1-208-800-11	s	METAL, CHIP 5.6k 0.5% 1/10W
R424	1-208-814-11	s	METAL, CHIP 22k 0.5% 1/10W
R426	1-216-049-91	s	METAL, CHIP 1k 5% 1/10W

(AD-115A BOARD(ES-7(CE)))

Ref. No. or Q'ty	Part No.	SP	Description
R428	1-216-049-91	s	METAL, CHIP 1k 5% 1/10W
R429	1-216-667-11	s	METAL, CHIP 4.7k 0.5% 1/10W
R430	1-208-806-11	s	METAL, CHIP 10k 0.5% 1/10W
R431	1-216-663-11	s	METAL, CHIP 3.3k 0.5% 1/10W
R432	1-216-659-11	■	METAL, CHIP 2.2k 0.5% 1/10W
R433	1-216-659-11	s	METAL, CHIP 2.2k 0.5% 1/10W
R434	1-216-659-11	s	METAL, CHIP 2.2k 0.5% 1/10W
R435	1-216-663-11	s	METAL, CHIP 3.3k 0.5% 1/10W
R436	1-216-667-11	s	METAL, CHIP 4.7k 0.5% 1/10W
R437	1-218-756-11	s	METAL, CHIP 150k 0.5% 1/10W
R438	1-216-663-11	■	METAL, CHIP 3.3k 0.5% 1/10W
R439	1-208-810-11	s	METAL, CHIP 15k 0.5% 1/10W
R440	1-208-810-11	s	METAL, CHIP 15k 0.5% 1/10W
R441	1-216-659-11	s	METAL, CHIP 2.2k 0.5% 1/10W
R442	1-218-756-11	■	METAL, CHIP 150k 0.5% 1/10W
R443	1-216-001-00	s	METAL, CHIP 10 5% 1/10W
R444	1-218-760-11	s	METAL, CHIP 220k 0.5% 1/10W
R445	1-216-671-11	■	METAL, CHIP 6.8k 0.5% 1/10W
R446	1-208-814-11	■	METAL, CHIP 22k 0.5% 1/10W
R447	1-208-806-11	s	METAL, CHIP 10k 0.5% 1/10W
R448	1-216-667-11	s	METAL, CHIP 4.7k 0.5% 1/10W
R449	1-216-699-11	■	METAL, CHIP 100k 0.5% 1/10W
R450	1-216-635-11	s	METAL, CHIP 220 0.5% 1/10W
R451	1-208-814-11	s	METAL, CHIP 22k 0.5% 1/10W
R452	1-216-697-91	s	METAL, CHIP 82k 0.5% 1/10W
R453	1-208-814-11	■	METAL, CHIP 22k 0.5% 1/10W
R454	1-216-635-11	s	METAL, CHIP 220 0.5% 1/10W
R455	1-216-651-11	s	METAL, CHIP 1k 0.5% 1/10W
R456	1-218-760-11	s	METAL, CHIP 220k 0.5% 1/10W
R457	1-216-671-11	s	METAL, CHIP 6.8k 0.5% 1/10W
R458	1-216-001-00	s	METAL, CHIP 10 5% 1/10W
R460	1-216-001-00	■	METAL, CHIP 10 ■ 1/10W
R461	1-216-001-00	■	METAL, CHIP 10 ■ 1/10W
R463	1-216-033-00	■	METAL, CHIP 220 5% 1/10W
R500	1-216-073-00	■	METAL, CHIP 10k 5% 1/10W
R501	1-216-025-91	s	METAL, CHIP 100 5% 1/10W
R502	1-216-049-91	s	METAL, CHIP 1k 5% 1/10W
R503	1-216-651-11	s	METAL, CHIP 1k 0.5% 1/10W
R504	1-208-800-11	s	METAL, CHIP 5.6k 0.5% 1/10W
R505	1-216-651-11	s	METAL, CHIP 1k 0.5% 1/10W
R506	1-216-009-00	s	METAL, CHIP 22 5% 1/10W
R507	1-216-041-00	s	METAL, CHIP 470 5% 1/10W
R508	1-216-673-11	s	METAL, CHIP 8.2k 0.5% 1/10W
R509	1-216-009-00	s	METAL, CHIP 22 5% 1/10W
R510	1-216-659-11	s	METAL, CHIP 2.2k 0.5% 1/10W
R511	1-216-649-11	s	METAL, CHIP 820 0.5% 1/10W
R512	1-216-677-11	■	METAL, CHIP 12k 0.5% 1/10W
R513	1-216-657-11	■	METAL, CHIP 1.8k 0.5% 1/10W
R514	1-216-659-11	■	METAL, CHIP 2.2k 0.5% 1/10W
R515	1-216-667-11	s	METAL, CHIP 4.7k 0.5% 1/10W
R516	1-208-822-11	s	METAL, CHIP 47k 0.5% 1/10W
R517	1-216-033-00	s	METAL, CHIP 220 5% 1/10W
R518	1-216-663-11	s	METAL, CHIP 3.3k 0.5% 1/10W
R519	1-216-687-11	s	METAL, CHIP 33k 0.5% 1/10W
R520	1-208-806-11	s	METAL, CHIP 10k 0.5% 1/10W
R521	1-216-077-00	■	METAL, CHIP 15k 5% 1/10W
R522	1-216-651-11	■	METAL, CHIP 1k 0.5% 1/10W
R523	1-216-649-11	s	METAL, CHIP 820 0.5% 1/10W
R524	1-216-667-11	s	METAL, CHIP 4.7k 0.5% 1/10W

(AD-115A BOARD(ES-7(CE)))

Ref. No. or Q'ty	Part No.	SP	Description
R525	1-216-624-11	■	METAL, CHIP 75 0.5% 1/10W
R526	1-216-641-11	s	METAL, CHIP 390 0.5% 1/10W
R527	1-216-025-91	s	METAL, CHIP 100 5% 1/10W
R528	1-208-814-11	s	METAL, CHIP 22k 0.5% 1/10W
R529	1-208-814-11	s	METAL, CHIP 22k 0.5% 1/10W
R531	1-216-667-11	s	METAL, CHIP 4.7k 0.5% 1/10W
R532	1-216-121-91	s	METAL, CHIP 1M 5% 1/10W
R533	1-216-637-11	s	METAL, CHIP 270 0.5% 1/10W
R534	1-216-671-11	s	METAL, CHIP 6.8k 0.5% 1/10W
R535	1-216-663-11	s	METAL, CHIP 3.3k 0.5% 1/10W
R536	1-216-657-11	s	METAL, CHIP 1.8k 0.5% 1/10W
R537	1-208-806-11	s	METAL, CHIP 10k 0.5% 1/10W
R538	1-216-667-11	s	METAL, CHIP 4.7k 0.5% 1/10W
R539	1-216-663-11	s	METAL, CHIP 3.3k 0.5% 1/10W
R540	1-216-667-11	s	METAL, CHIP 4.7k 0.5% 1/10W
R541	1-216-671-11	s	METAL, CHIP 6.8k 0.5% 1/10W
R542	1-216-033-00	s	METAL, CHIP 220 5% 1/10W
R543	1-216-033-00	s	METAL, CHIP 220 5% 1/10W
R544	1-216-065-00	s	METAL, CHIP 4.7k 5% 1/10W
R545	1-216-651-11	s	METAL, CHIP 1k 0.5% 1/10W
R546	1-216-651-11	s	METAL, CHIP 1k 0.5% 1/10W
R547	1-208-800-11	s	METAL, CHIP 5.6k 0.5% 1/10W
R548	1-208-800-11	s	METAL, CHIP 5.6k 0.5% 1/10W
R549	1-216-017-91	s	METAL, CHIP 47 ■ 1/10W
R550	1-216-651-11	s	METAL, CHIP 1k 0.5% 1/10W
R551	1-216-619-11	■	METAL, CHIP 47 0.5% 1/10W
R552	1-216-651-11	s	METAL, CHIP 1k 0.5% 1/10W
R553	1-216-057-00	s	METAL, CHIP 2.2k 5% 1/10W
R554	1-216-057-00	s	METAL, CHIP 2.2k 5% 1/10W
R555	1-216-017-91	■	METAL, CHIP 47 5% 1/10W
R556	1-216-073-00	s	METAL, CHIP 10k 5% 1/10W
R557	1-216-057-00	s	METAL, CHIP 2.2k 5% 1/10W
R558	1-216-065-00	■	METAL, CHIP 4.7k 5% 1/10W
R559	1-216-025-91	s	METAL, CHIP 100 5% 1/10W
R560	1-216-651-11	s	METAL, CHIP 1k 0.5% 1/10W
R561	1-208-800-11	s	METAL, CHIP 5.6k 0.5% 1/10W
R563	1-216-651-11	s	METAL, CHIP 1k 0.5% 1/10W
R564	1-216-057-00	s	METAL, CHIP 2.2k ■ 1/10W
R565	1-216-021-00	s	METAL, CHIP 68 5% 1/10W
R567	1-208-774-11	s	METAL, CHIP 470 0.5% 1/10W
R569	1-216-642-11	s	METAL, CHIP 430 0.5% 1/10W
R570	1-208-774-11	s	METAL, CHIP 470 0.5% 1/10W
R571	1-216-651-11	s	METAL, CHIP 1k 0.5% 1/10W
R572	1-216-647-11	s	METAL, CHIP 680 0.5% 1/10W
R573	1-216-635-11	■	METAL, CHIP 220 0.5% 1/10W
R574	1-216-627-11	■	METAL, CHIP 100 0.5% 1/10W
R575	1-216-009-00	s	METAL, CHIP 22 ■ 1/10W
R577	1-216-021-00	s	METAL, CHIP 68 5% 1/10W
R578	1-216-065-00	s	METAL, CHIP 4.7k 5% 1/10W
R579	1-216-073-00	s	METAL, CHIP 10k 5% 1/10W
R580	1-216-651-11	s	METAL, CHIP 1k 0.5% 1/10W
R581	1-216-650-11	■	METAL, CHIP 910 0.5% 1/10W
R582	1-216-651-11	s	METAL, CHIP 1k 0.5% 1/10W
R583	1-216-025-91	s	METAL, CHIP 100 5% 1/10W
R584	1-208-806-11	s	METAL, CHIP 10k 0.5% 1/10W
R585	1-216-081-00	s	METAL, CHIP 22k 5% 1/10W
R586	1-216-083-00	s	METAL, CHIP 27k 5% 1/10W
R587	1-216-045-00	s	METAL, CHIP 680 5% 1/10W
R588	1-216-659-11	s	METAL, CHIP 2.2k 0.5% 1/10W

(AD-115A BOARD(ES-7(CE)))

Ref. No. or Q'ty	Part No.	SP	Description
R589	1-216-651-11	s	METAL, CHIP 1k 0.5% 1/10W
R590	1-216-663-11	s	METAL, CHIP 3.3k 0.5% 1/10W
R591	1-216-057-00	s	METAL, CHIP 2.2k 5% 1/10W
R592	1-216-699-11	s	METAL, CHIP 100k 0.5% 1/10W
R593	1-208-812-11	■	METAL, CHIP 18k 0.5% 1/10W
R594	1-216-073-00	s	METAL, CHIP 10k 5% 1/10W
R595	1-216-651-11	s	METAL, CHIP 1k 0.5% 1/10W
R596	1-216-049-91	■	METAL, CHIP 1k 5% 1/10W
R597	1-216-699-11	s	METAL, CHIP 100k 0.5% 1/10W
R598	1-216-057-00	s	METAL, CHIP 2.2k 5% 1/10W
R599	1-216-697-91	s	METAL, CHIP 82k 0.5% 1/10W
R600	1-216-073-00	s	METAL, CHIP 10k 5% 1/10W
R601	1-216-025-91	s	METAL, CHIP 100 5% 1/10W
R602	1-216-647-11	■	METAL, CHIP 680 0.5% 1/10W
R603	1-216-635-11	■	METAL, CHIP 220 0.5% 1/10W
R604	1-216-049-91	s	METAL, CHIP 1k 5% 1/10W
R605	1-216-603-11	■	METAL, CHIP 10 0.5% 1/10W
R606	1-216-627-11	s	METAL, CHIP 100 0.5% 1/10W
R607	1-216-659-11	s	METAL, CHIP 2.2k 0.5% 1/10W
R608	1-216-049-91	s	METAL, CHIP 1k ■ 1/10W
R609	1-216-639-11	■	METAL, CHIP 330 0.5% 1/10W
R610	1-216-025-91	s	METAL, CHIP 100 ■ 1/10W
R611	1-216-639-11	s	METAL, CHIP 330 0.5% 1/10W
R612	1-216-057-00	s	METAL, CHIP 2.2k ■ 1/10W
R613	1-216-073-00	s	METAL, CHIP 10k 5% 1/10W
R614	1-216-049-91	s	METAL, CHIP 1k ■ 1/10W
R615	1-216-650-11	■	METAL, CHIP 910 0.5% 1/10W
R616	1-216-659-11	s	METAL, CHIP 2.2k 0.5% 1/10W
R617	1-216-033-00	s	METAL, CHIP 220 ■ 1/10W
R618	1-216-077-00	s	METAL, CHIP 15k ■ 1/10W
R619	1-216-017-91	s	METAL, CHIP 47 5% 1/10W
R620	1-216-057-00	■	METAL, CHIP 2.2k 5% 1/10W
R621	1-216-033-00	s	METAL, CHIP 220 5% 1/10W
R623	1-216-651-11	s	METAL, CHIP 1k 0.5% 1/10W
R624	1-216-648-11	s	METAL, CHIP 750 0.5% 1/10W
R625	1-216-021-00	s	METAL, CHIP 68 5% 1/10W
R626	1-216-021-00	■	METAL, CHIP 68 ■ 1/10W
R627	1-216-081-00	s	METAL, CHIP 22k 5% 1/10W
R628	1-216-081-00	s	METAL, CHIP 22k 5% 1/10W
R629	1-216-073-00	s	METAL, CHIP 10k 5% 1/10W
R630	1-216-025-91	s	METAL, CHIP 100 ■ 1/10W
R631	1-216-647-11	s	METAL, CHIP 680 0.5% 1/10W
R632	1-216-651-11	s	METAL, CHIP 1k 0.5% 1/10W
R633	1-216-639-11	s	METAL, CHIP 330 0.5% 1/10W
R634	1-208-814-11	s	METAL, CHIP 22k 0.5% 1/10W
R635	1-216-057-00	s	METAL, CHIP 2.2k 5% 1/10W
R636	1-216-049-91	s	METAL, CHIP 1k 5% 1/10W
R637	1-208-814-11	s	METAL, CHIP 22k 0.5% 1/10W
R638	1-216-639-11	s	METAL, CHIP 330 0.5% 1/10W
R639	1-216-639-11	s	METAL, CHIP 330 0.5% 1/10W
R640	1-216-057-00	s	METAL, CHIP 2.2k ■ 1/10W
R641	1-216-073-00	s	METAL, CHIP 10k 5% 1/10W
R642	1-216-049-91	s	METAL, CHIP 1k 5% 1/10W
R643	1-216-650-11	s	METAL, CHIP 910 0.5% 1/10W
R644	1-216-659-11	s	METAL, CHIP 2.2k 0.5% 1/10W
R645	1-216-073-00	s	METAL, CHIP 10k ■ 1/10W
R646	1-216-647-11	s	METAL, CHIP 680 0.5% 1/10W
R647	1-216-651-11	s	METAL, CHIP 1k 0.5% 1/10W
R648	1-216-639-11	s	METAL, CHIP 330 0.5% 1/10W

(AD-115A BOARD(ES-7(CE)))

Ref. No. or Q'ty	Part No.	SP	Description
R649	1-208-814-11	s	METAL, CHIP 22k 0.5% 1/10W
R650	1-216-057-00	s	METAL, CHIP 2.2k 1/10W
R651	1-216-049-91		METAL, CHIP 1k 5% 1/10W
R652	1-208-814-11	s	METAL, CHIP 22k 0.5% 1/10W
R653	1-216-639-11	s	METAL, CHIP 330 0.5% 1/10W
R654	1-216-639-11	s	METAL, CHIP 330 0.5% 1/10W
R655	1-216-057-00	s	METAL, CHIP 2.2k 5% 1/10W
R656	1-216-073-00	s	METAL, CHIP 10k 5% 1/10W
R657	1-216-049-91	s	METAL, CHIP 1k 5% 1/10W
R658	1-216-650-11	s	METAL, CHIP 910 0.5% 1/10W
R659	1-216-659-11	s	METAL, CHIP 2.2k 0.5% 1/10W
R660	1-216-021-00	s	METAL, CHIP 68 5% 1/10W
R661	1-216-021-00	s	METAL, CHIP 68 1/10W
R662	1-216-021-00	s	METAL, CHIP 68 1/10W
R663	1-216-295-91	s	RES, CHIP 0
R664	1-216-295-91	s	RES, CHIP 0
R665	1-216-295-91	s	RES, CHIP 0
R666	1-216-051-00		METAL, CHIP 1.2k 5% 1/10W
R667	1-216-051-00	s	METAL, CHIP 1.2k 5% 1/10W
R668	1-216-025-91	s	METAL, CHIP 100 5% 1/10W
R669	1-216-051-00	s	METAL, CHIP 1.2k 5% 1/10W
R670	1-216-025-91	s	METAL, CHIP 100 5% 1/10W
R671	1-216-647-11	s	METAL, CHIP 680 0.5% 1/10W
R672	1-216-659-11	s	METAL, CHIP 2.2k 0.5% 1/10W
R673	1-208-800-11		METAL, CHIP 5.6k 0.5% 1/10W
R703	1-208-806-11	s	METAL, CHIP 10k 0.5% 1/10W
R704	1-208-774-11	s	METAL, CHIP 470 0.5% 1/10W
R705	1-208-806-11	s	METAL, CHIP 10k 0.5% 1/10W
R706	1-216-651-11	s	METAL, CHIP 1k 0.5% 1/10W
R707	1-216-699-11	s	METAL, CHIP 100k 0.5% 1/10W
R708	1-208-806-11	s	METAL, CHIP 10k 0.5% 1/10W
R709	1-216-659-11	s	METAL, CHIP 2.2k 0.5% 1/10W
R710	1-216-657-11	s	METAL, CHIP 1.8k 0.5% 1/10W
R711	1-216-659-11	s	METAL, CHIP 2.2k 0.5% 1/10W
R712	1-216-627-11	s	METAL, CHIP 100 0.5% 1/10W
R713	1-216-021-00		METAL, CHIP 68 5% 1/10W
R714	1-216-085-00		METAL, CHIP 33k 5% 1/10W
R715	1-218-772-11	s	METAL, CHIP 680k 0.5% 1/10W
R716	1-216-057-00	s	METAL, CHIP 2.2k 5% 1/10W
R717	1-216-687-11	s	METAL, CHIP 33k 0.5% 1/10W
R718	1-216-667-11	s	METAL, CHIP 4.7k 0.5% 1/10W
R719	1-216-689-11	s	METAL, CHIP 39k 0.5% 1/10W
R720	1-208-806-11	s	METAL, CHIP 10k 0.5% 1/10W
R722	1-216-295-91	s	RES, CHIP 0
R723	1-208-800-11	s	METAL, CHIP 5.6k 0.5% 1/10W
R724	1-208-814-11	s	METAL, CHIP 22k 0.5% 1/10W
R726	1-216-049-91	s	METAL, CHIP 1k 1/10W
R728	1-216-049-91	s	METAL, CHIP 1k 5% 1/10W
R729	1-216-667-11	s	METAL, CHIP 4.7k 0.5% 1/10W
R730	1-208-806-11	s	METAL, CHIP 10k 0.5% 1/10W
R731	1-216-663-11	s	METAL, CHIP 3.3k 0.5% 1/10W
R732	1-216-659-11	s	METAL, CHIP 2.2k 0.5% 1/10W
R733	1-216-659-11		METAL, CHIP 2.2k 0.5% 1/10W
R734	1-216-659-11	s	METAL, CHIP 2.2k 0.5% 1/10W
R735	1-216-663-11	s	METAL, CHIP 3.3k 0.5% 1/10W
R736	1-216-667-11	s	METAL, CHIP 4.7k 0.5% 1/10W
R737	1-218-756-11	s	METAL, CHIP 150k 0.5% 1/10W
R738	1-216-663-11	s	METAL, CHIP 3.3k 0.5% 1/10W
R739	1-208-810-11	s	METAL, CHIP 15k 0.5% 1/10W

(AD-115A BOARD(ES-7(CE)))

Ref. No. or Q'ty	Part No.	SP	Description
R740	1-208-810-11		METAL, CHIP 15k 0.5% 1/10W
R741	1-216-659-11	s	METAL, CHIP 2.2k 0.5% 1/10W
R742	1-218-756-11	s	METAL, CHIP 150k 0.5% 1/10W
R743	1-216-001-00	s	METAL, CHIP 10 1/10W
R744	1-218-760-11	s	METAL, CHIP 220k 0.5% 1/10W
R745	1-216-671-11	s	METAL, CHIP 6.8k 0.5% 1/10W
R746	1-208-814-11		METAL, CHIP 22k 0.5% 1/10W
R747	1-208-806-11	s	METAL, CHIP 10k 0.5% 1/10W
R748	1-216-667-11	s	METAL, CHIP 4.7k 0.5% 1/10W
R749	1-216-699-11	s	METAL, CHIP 100k 0.5% 1/10W
R750	1-216-635-11	s	METAL, CHIP 220 0.5% 1/10W
R751	1-208-814-11	s	METAL, CHIP 22k 0.5% 1/10W
R752	1-216-697-91	s	METAL, CHIP 82k 0.5% 1/10W
R753	1-208-814-11	s	METAL, CHIP 22k 0.5% 1/10W
R754	1-216-635-11	s	METAL, CHIP 220 0.5% 1/10W
R755	1-216-651-11	s	METAL, CHIP 1k 0.5% 1/10W
R756	1-218-760-11		METAL, CHIP 220k 0.5% 1/10W
R757	1-216-671-11	s	METAL, CHIP 6.8k 0.5% 1/10W
R758	1-216-001-00		METAL, CHIP 10 5% 1/10W
R760	1-216-001-00	s	METAL, CHIP 10 5% 1/10W
R761	1-216-001-00	s	METAL, CHIP 10 5% 1/10W
R763	1-216-033-00	s	METAL, CHIP 220 5% 1/10W
R801	1-216-081-00		METAL, CHIP 22k 1/10W
R802	1-216-081-00		METAL, CHIP 22k 5% 1/10W
R803	1-216-057-00	s	METAL, CHIP 2.2k 1/10W
R804	1-218-772-11	s	METAL, CHIP 680k 0.5% 1/10W
R805	1-216-659-11	s	METAL, CHIP 2.2k 0.5% 1/10W
R806	1-208-806-11	s	METAL, CHIP 10k 0.5% 1/10W
R808	1-216-041-00	s	METAL, CHIP 470 1/10W
R811	1-216-371-00		METAL 1.5 5% 2W
R900	1-216-033-00	s	METAL, CHIP 220 5% 1/10W
R901	1-216-033-00		METAL, CHIP 220 5% 1/10W
R903	1-216-033-00	s	METAL, CHIP 220 5% 1/10W
R904	1-216-033-00	s	METAL, CHIP 220 5% 1/10W
R905	1-216-033-00		METAL, CHIP 220 5% 1/10W
R906	1-216-049-91		METAL, CHIP 1k 5% 1/10W
R907	1-216-025-91	s	METAL, CHIP 100 1/10W
R908	1-216-049-91	s	METAL, CHIP 1k 5% 1/10W
R909	1-216-025-91	s	METAL, CHIP 100 5% 1/10W
R910	1-216-049-91	s	METAL, CHIP 1k 5% 1/10W
R911	1-216-625-11	s	METAL, CHIP 82 0.5% 1/10W
R912	1-216-625-11	s	METAL, CHIP 82 0.5% 1/10W
R913	1-216-057-00	s	METAL, CHIP 2.2k 1/10W
R914	1-216-657-11	s	METAL, CHIP 1.8k 0.5% 1/10W
R915	1-208-625-11		METAL, CHIP 2.25k 0.1% 1/10W
R916	1-208-630-11	s	METAL, CHIP 11.49 0.1% 1/10W
R917	1-216-657-11	s	METAL, CHIP 1.8k 0.5% 1/10W
R918	1-208-774-11	s	METAL, CHIP 470 0.5% 1/10W
R919	1-208-774-11	s	METAL, CHIP 470 0.5% 1/10W
R920	1-216-650-11		METAL, CHIP 910 0.5% 1/10W
R921	1-208-774-11	s	METAL, CHIP 470 0.5% 1/10W
R922	1-216-625-11	s	METAL, CHIP 82 0.5% 1/10W
R923	1-216-651-11	s	METAL, CHIP 1k 0.5% 1/10W
R924	1-216-033-00	s	METAL, CHIP 220 1/10W
R925	1-216-049-91	s	METAL, CHIP 1k 5% 1/10W
R926	1-216-049-91	s	METAL, CHIP 1k 5% 1/10W
R927	1-216-650-11	s	METAL, CHIP 910 0.5% 1/10W
R928	1-216-627-11	s	METAL, CHIP 100 0.5% 1/10W
R929	1-216-659-11	s	METAL, CHIP 2.2k 0.5% 1/10W

(AD-115A BOARD(ES-7(CE)))

Ref. No. or Q'ty	Part No.	SP	Description
R930	1-216-057-00	s	METAL, CHIP 2.2k ■ 1/10W
R931	1-216-627-11	s	METAL, CHIP 100 0.5% 1/10W
R932	1-216-659-11	s	METAL, CHIP 2.2k 0.5% 1/10W
R933	1-216-057-00	s	METAL, CHIP 2.2k 5% 1/10W
R934	1-216-625-11	s	METAL, CHIP 82 0.5% 1/10W
R935	1-216-624-11	s	METAL, CHIP 75 0.5% 1/10W
R936	1-216-624-11	s	METAL, CHIP 75 0.5% 1/10W
R937	1-216-624-11	s	METAL, CHIP 75 0.5% 1/10W
R938-943	1-216-033-00	s	METAL, CHIP 220 5% 1/10W
R944	1-216-049-91	■	METAL, CHIP 1k 5% 1/10W
R945	1-216-025-91	s	METAL, CHIP 100 5% 1/10W
R946	1-216-049-91	s	METAL, CHIP 1k 5% 1/10W
R947	1-216-025-91	s	METAL, CHIP 100 5% 1/10W
R948	1-216-049-91	s	METAL, CHIP 1k 5% 1/10W
R949	1-216-622-11	■	METAL, CHIP 62 0.5% 1/10W
R950	1-216-057-00	s	METAL, CHIP 2.2k 5% 1/10W
R951	1-208-623-11	s	METAL, CHIP 1.43k 0.1% 1/10W
R952	1-208-625-11	s	METAL, CHIP 2.25k 0.1% 1/10W
R953	1-208-627-11	s	METAL, CHIP 4.41k 0.1% 1/16W
R954	1-216-657-11	s	METAL, CHIP 1.8k 0.5% 1/10W
R955	1-208-774-11	s	METAL, CHIP 470 0.5% 1/10W
R956	1-208-774-11	s	METAL, CHIP 470 0.5% 1/10W
R957	1-216-650-11	■	METAL, CHIP 910 0.5% 1/10W
R958	1-208-774-11	■	METAL, CHIP 470 0.5% 1/10W
R959	1-216-625-11	s	METAL, CHIP 82 0.5% 1/10W
R960	1-216-651-11	s	METAL, CHIP 1k 0.5% 1/10W
R961	1-216-033-00	s	METAL, CHIP 220 5% 1/10W
R962	1-216-049-91	■	METAL, CHIP 1k 5% 1/10W
R963	1-216-049-91	■	METAL, CHIP 1k ■ 1/10W
R964	1-216-650-11	s	METAL, CHIP 910 0.5% 1/10W
R965	1-216-627-11	s	METAL, CHIP 100 0.5% 1/10W
R966	1-216-659-11	s	METAL, CHIP 2.2k 0.5% 1/10W
R967	1-216-057-00	s	METAL, CHIP 2.2k 5% 1/10W
R968	1-216-627-11	s	METAL, CHIP 100 0.5% 1/10W
R969	1-216-659-11	s	METAL, CHIP 2.2k 0.5% 1/10W
R970	1-216-057-00	s	METAL, CHIP 2.2k 5% 1/10W
R971	1-216-651-11	s	METAL, CHIP 1k 0.5% 1/10W
R972	1-218-772-11	s	METAL, CHIP 680k 0.5% 1/10W
R973	1-216-659-11	s	METAL, CHIP 2.2k 0.5% 1/10W
R974	1-216-659-11	s	METAL, CHIP 2.2k 0.5% 1/10W
R975	1-216-659-11	s	METAL, CHIP 2.2k 0.5% 1/10W
R976	1-216-697-91	s	METAL, CHIP 82k 0.5% 1/10W
R977	1-208-806-11	s	METAL, CHIP 10k 0.5% 1/10W
R978	1-208-822-11	s	METAL, CHIP 47k 0.5% 1/10W
R979	1-216-687-11	s	METAL, CHIP 33k 0.5% 1/10W
R980	1-208-814-11	s	METAL, CHIP 22k 0.5% 1/10W
R981	1-218-760-11	s	METAL, CHIP 220k 0.5% 1/10W
R982	1-208-806-11	s	METAL, CHIP 10k 0.5% 1/10W
R983	1-216-025-91	■	METAL, CHIP 100 5% 1/10W
R984	1-208-806-11	s	METAL, CHIP 10k 0.5% 1/10W
R985	1-216-077-00	s	METAL, CHIP 15k 5% 1/10W
R986	1-216-065-00	s	METAL, CHIP 4.7k 5% 1/10W
R987	1-216-065-00	s	METAL, CHIP 4.7k 5% 1/10W
R988	1-208-774-11	s	METAL, CHIP 470 0.5% 1/10W
R989	1-216-655-11	s	METAL, CHIP 1.5k 0.5% 1/10W
R990	1-216-065-00	s	METAL, CHIP 4.7k 5% 1/10W
R991	1-208-806-11	s	METAL, CHIP 10k 0.5% 1/10W
R992	1-216-041-00	s	METAL, CHIP 470 5% 1/10W
R993	1-216-121-91	s	METAL, CHIP 1M ■ 1/10W

(AD-115A BOARD(ES-7(CE)))

Ref. No. or Q'ty	Part No.	SP	Description
R994	1-216-699-11	s	METAL, CHIP 100k 0.5% 1/10W
R995	1-216-663-11	■	METAL, CHIP 3.3k 0.5% 1/10W
R996	1-216-699-11	s	METAL, CHIP 100k 0.5% 1/10W
R997	1-216-651-11	s	METAL, CHIP 1k 0.5% 1/10W
R998	1-216-697-91	■	METAL, CHIP 82k 0.5% 1/10W
R999	1-216-073-00	s	METAL, CHIP 10k 5% 1/10W
R1000	1-216-025-91	s	METAL, CHIP 100 ■ 1/10W
R1001	1-216-687-11	s	METAL, CHIP 33k 0.5% 1/10W
R1002	1-216-033-00	s	METAL, CHIP 220 5% 1/10W
R1003	1-216-651-11	s	METAL, CHIP 1k 0.5% 1/10W
R1004	1-216-073-00	■	METAL, CHIP 10k 5% 1/10W
R1005	1-216-025-91	s	METAL, CHIP 100 5% 1/10W
R1006	1-216-049-91	s	METAL, CHIP 1k ■ 1/10W
R1007	1-218-764-11	s	METAL, CHIP 330k 0.5% 1/10W
R1008	1-208-800-11	■	METAL, CHIP 5.6k 0.5% 1/10W
R1009	1-216-689-11	s	METAL, CHIP 39k 0.5% 1/10W
R1010	1-216-651-11	s	METAL, CHIP 1k 0.5% 1/10W
R1011	1-216-663-11	s	METAL, CHIP 3.3k 0.5% 1/10W
R1012	1-208-806-11	■	METAL, CHIP 10k 0.5% 1/10W
R1013	1-216-673-11	s	METAL, CHIP 8.2k 0.5% 1/10W
R1014	1-218-760-11	■	METAL, CHIP 220k 0.5% 1/10W
R1015	1-216-682-11	■	METAL, CHIP 20k 0.5% 1/10W
R1016	1-208-801-11	s	METAL, CHIP 6.2k 0.5% 1/10W
R1017	1-216-673-11	■	METAL, CHIP 8.2k 0.5% 1/10W
R1019	1-216-697-91	■	METAL, CHIP 82k 0.5% 1/10W
R1020	1-216-659-11	s	METAL, CHIP 2.2k 0.5% 1/10W
R1021	1-216-651-11	s	METAL, CHIP 1k 0.5% 1/10W
R1022	1-216-667-11	s	METAL, CHIP 4.7k 0.5% 1/10W
R1023	1-218-768-11	s	METAL, CHIP 470k 0.5% 1/10W
R1024	1-216-619-11	s	METAL, CHIP 47 0.5% 1/10W
R1025	1-216-648-11	■	METAL, CHIP 750 0.5% 1/10W
R1026	1-216-667-11	■	METAL, CHIP 4.7k 0.5% 1/10W
R1027	1-216-025-91	s	METAL, CHIP 100 5% 1/10W
R1028	1-216-603-11	s	METAL, CHIP 10 0.5% 1/10W
R1029	1-216-699-91	■	METAL, CHIP 100k 0.5% 1/10W
R1030	1-216-682-11	s	METAL, CHIP 20k 0.5% 1/10W
R1031	1-216-633-11	s	METAL, CHIP 180 0.5% 1/10W
R1032	1-216-639-11	s	METAL, CHIP 330 0.5% 1/10W
R1033	1-208-814-11	s	METAL, CHIP 22k 0.5% 1/10W
R1034	1-216-025-91	s	METAL, CHIP 100 5% 1/10W
R1035	1-216-025-91	s	METAL, CHIP 100 5% 1/10W
R1036	1-216-696-11	s	METAL, CHIP 75k 0.5% 1/10W
R1037	1-216-057-00	s	METAL, CHIP 2.2k 5% 1/10W
R1038	1-216-057-00	s	METAL, CHIP 2.2k 5% 1/10W
R1039	1-216-651-11	s	METAL, CHIP 1k 0.5% 1/10W
R1040	1-216-651-11	s	METAL, CHIP 1k 0.5% 1/10W
R1041	1-208-812-11	s	METAL, CHIP 18k 0.5% 1/10W
R1042	1-208-812-11	s	METAL, CHIP 18k 0.5% 1/10W
R1043	1-216-651-11	s	METAL, CHIP 1k 0.5% 1/10W
R1044	1-216-651-11	s	METAL, CHIP 1k 0.5% 1/10W
R1045	1-216-081-00	■	METAL, CHIP 22k ■ 1/10W
R1046	1-216-083-00	s	METAL, CHIP 27k 5% 1/10W
R1047	1-216-081-00	s	METAL, CHIP 22k 5% 1/10W
R1048	1-216-083-00	s	METAL, CHIP 27k 5% 1/10W
R1049	1-216-065-00	s	METAL, CHIP 4.7k ■ 1/10W
R1050	1-216-065-00	s	METAL, CHIP 4.7k ■ 1/10W
R1051	1-216-065-00	s	METAL, CHIP 4.7k 5% 1/10W
R1052	1-216-651-11	s	METAL, CHIP 1k 0.5% 1/10W
R1053	1-216-065-00	■	METAL, CHIP 4.7k 5% 1/10W

(AD-115A BOARD(ES-7(CE)))

Ref. No. or Q'ty	Part No.	SP	Description
R1054	1-216-651-11	s	METAL, CHIP 1k 0.5% 1/10W
R1055	1-216-651-11	s	METAL, CHIP 1k 0.5% 1/10W
R1056	1-216-651-11	s	METAL, CHIP 1k 0.5% 1/10W
R1057	1-216-650-11	s	METAL, CHIP 910 0.5% 1/10W
R1058	1-216-650-11	s	METAL, CHIP 910 0.5% 1/10W
R1059	1-216-651-11	■	METAL, CHIP 1k 0.5% 1/10W
R1060	1-216-651-11	s	METAL, CHIP 1k 0.5% 1/10W
R1061	1-216-065-00	s	METAL, CHIP 4.7k 5% 1/10W
R1062	1-216-065-00	s	METAL, CHIP 4.7k 5% 1/10W
R1063	1-216-674-11	■	METAL, CHIP 9.1k 0.5% 1/10W
R1064	1-208-784-11	s	METAL, CHIP 1.2k 0.5% 1/10W
R1065	1-216-674-11	s	METAL, CHIP 9.1k 0.5% 1/10W
R1066	1-208-784-11	s	METAL, CHIP 1.2k 0.5% 1/10W
R1067	1-216-057-00	s	METAL, CHIP 2.2k 5% 1/10W
R1068	1-216-057-00	s	METAL, CHIP 2.2k 5% 1/10W
R1069	1-208-774-11	s	METAL, CHIP 470 0.5% 1/10W
R1070	1-208-774-11	■	METAL, CHIP 470 0.5% 1/10W
R1071	1-216-650-11	s	METAL, CHIP 910 0.5% 1/10W
R1072	1-208-767-11	s	METAL, CHIP 240 0.5% 1/10W
R1073	1-216-647-11	s	METAL, CHIP 680 0.5% 1/10W
R1074	1-216-649-11	s	METAL, CHIP 820 0.5% 1/10W
R1075	1-216-651-11	■	METAL, CHIP 1k 0.5% 1/10W
R1076	1-216-635-11	s	METAL, CHIP 220 0.5% 1/10W
R1077	1-216-651-11	■	METAL, CHIP 1k 0.5% 1/10W
R1078	1-218-772-11	s	METAL, CHIP 680k 0.5% 1/10W
R1079	1-216-659-11	s	METAL, CHIP 2.2k 0.5% 1/10W
R1080	1-216-659-11	s	METAL, CHIP 2.2k 0.5% 1/10W
R1081	1-216-659-11	s	METAL, CHIP 2.2k 0.5% 1/10W
R1082	1-216-697-91	s	METAL, CHIP 82k 0.5% 1/10W
R1083	1-208-806-11	s	METAL, CHIP 10k 0.5% 1/10W
R1084	1-208-822-11	s	METAL, CHIP 47k 0.5% 1/10W
R1085	1-216-687-11	s	METAL, CHIP 33k 0.5% 1/10W
R1086	1-208-814-11	s	METAL, CHIP 22k 0.5% 1/10W
R1087	1-218-760-11	s	METAL, CHIP 220k 0.5% 1/10W
R1088	1-208-806-11	s	METAL, CHIP 10k 0.5% 1/10W
R1089	1-216-025-91	s	METAL, CHIP 100 5% 1/10W
R1090	1-208-806-11	s	METAL, CHIP 10k 0.5% 1/10W
R1091	1-216-077-00	s	METAL, CHIP 15k 5% 1/10W
R1092	1-216-065-00	s	METAL, CHIP 4.7k 5% 1/10W
R1093	1-216-065-00	s	METAL, CHIP 4.7k 5% 1/10W
R1094	1-208-774-11	■	METAL, CHIP 470 0.5% 1/10W
R1095	1-216-655-11	s	METAL, CHIP 1.5k 0.5% 1/10W
R1096	1-216-065-00	■	METAL, CHIP 4.7k [illegible] 1/10W
R1097	1-208-806-11	s	METAL, CHIP 10k 0.5% 1/10W
R1098	1-216-041-00	s	METAL, CHIP 470 5% 1/10W
R1099	1-216-121-91	s	METAL, CHIP 1M 5% 1/10W
R1100	1-216-699-11	s	METAL, CHIP 100k 0.5% 1/10W
R1101	1-216-663-11	s	METAL, CHIP 3.3k 0.5% 1/10W
R1102	1-216-699-11	s	METAL, CHIP 100k 0.5% 1/10W
R1103	1-216-651-11	s	METAL, CHIP 1k 0.5% 1/10W
R1104	1-216-697-91	s	METAL, CHIP 82k 0.5% 1/10W
R1105	1-216-073-00	s	METAL, CHIP 10k 5% 1/10W
R1106	1-216-025-91	s	METAL, CHIP 100 5% 1/10W
R1107	1-216-687-11	■	METAL, CHIP 33k 0.5% 1/10W
R1108	1-216-033-00	s	METAL, CHIP 220 5% 1/10W
R1109	1-216-651-11	s	METAL, CHIP 1k 0.5% 1/10W
R1110	1-216-073-00	s	METAL, CHIP 10k 5% 1/10W
R1111	1-216-025-91	s	METAL, CHIP 100 5% 1/10W
R1112	1-216-049-91	s	METAL, CHIP 1k 5% 1/10W

(AD-115A BOARD(ES-7(CE)))

Ref. No. or Q'ty	Part No.	SP	Description
R1113	1-218-764-11	s	METAL, CHIP 330k 0.5% 1/10W
R1114	1-208-800-11	s	METAL, CHIP 5.6k 0.5% 1/10W
R1115	1-216-689-11	s	METAL, CHIP 39k 0.5% 1/10W
R1116	1-216-651-11	s	METAL, CHIP 1k 0.5% 1/10W
R1117	1-216-663-11	■	METAL, CHIP 3.3k 0.5% 1/10W
R1118	1-208-806-11	s	METAL, CHIP 10k 0.5% 1/10W
R1119	1-216-673-11	s	METAL, CHIP 8.2k 0.5% 1/10W
R1120	1-218-760-11	s	METAL, CHIP 220k 0.5% 1/10W
R1121	1-216-682-11	s	METAL, CHIP 20k 0.5% 1/10W
R1122	1-208-801-11	■	METAL, CHIP 6.2k 0.5% 1/10W
R1123	1-216-673-11	s	METAL, CHIP 8.2k 0.5% 1/10W
R1125	1-216-697-91	s	METAL, CHIP 82k 0.5% 1/10W
R1126	1-216-659-11	s	METAL, CHIP 2.2k 0.5% 1/10W
R1127	1-216-651-11	s	METAL, CHIP 1k 0.5% 1/10W
R1128	1-216-667-11	s	METAL, CHIP 4.7k 0.5% 1/10W
R1129	1-218-768-11	s	METAL, CHIP 470k 0.5% 1/10W
R1130	1-216-619-11	s	METAL, CHIP 47 0.5% 1/10W
R1131	1-216-667-11	s	METAL, CHIP 4.7k 0.5% 1/10W
R1132	1-216-648-11	■	METAL, CHIP 750 0.5% 1/10W
R1133	1-216-699-91	■	METAL, CHIP 100k 0.5% 1/10W
R1134	1-216-682-11	s	METAL, CHIP 20k 0.5% 1/10W
R1135	1-216-025-91	s	METAL, CHIP 100 [illegible] 1/10W
R1136	1-216-603-11	s	METAL, CHIP 10 0.5% 1/10W
R1137	1-216-639-11	s	METAL, CHIP 330 0.5% 1/10W
R1138	1-216-633-11	■	METAL, CHIP 180 0.5% 1/10W
R1139	1-208-814-11	■	METAL, CHIP 22k 0.5% 1/10W
R1140	1-216-696-11	s	METAL, CHIP 75k 0.5% 1/10W
R1141	1-216-025-91	■	METAL, CHIP 100 5% 1/10W
R1142	1-216-025-91	s	METAL, CHIP 100 5% 1/10W
R1143	1-216-057-00	s	METAL, CHIP 2.2k 5% 1/10W
R1144	1-216-057-00	s	METAL, CHIP 2.2k [illegible] 1/10W
R1145	1-216-651-11	s	METAL, CHIP 1k 0.5% 1/10W
R1146	1-208-812-11	s	METAL, CHIP 18k 0.5% 1/10W
R1147	1-216-651-11	s	METAL, CHIP 1k 0.5% 1/10W
R1148	1-208-812-11	s	METAL, CHIP 18k 0.5% 1/10W
R1149	1-216-651-11	■	METAL, CHIP 1k 0.5% 1/10W
R1150	1-216-651-11	■	METAL, CHIP 1k 0.5% 1/10W
R1151	1-216-081-00	■	METAL, CHIP 22k [illegible] 1/10W
R1152	1-216-083-00	■	METAL, CHIP 27k [illegible] 1/10W
R1153	1-216-081-00	s	METAL, CHIP 22k [illegible] 1/10W
R1154	1-216-083-00	s	METAL, CHIP 27k 5% 1/10W
R1155	1-216-065-00	s	METAL, CHIP 4.7k 5% 1/10W
R1156	1-216-065-00	s	METAL, CHIP 4.7k 5% 1/10W
R1157	1-216-065-00	s	METAL, CHIP 4.7k 5% 1/10W
R1158	1-216-651-11	s	METAL, CHIP 1k 0.5% 1/10W
R1159	1-216-065-00	s	METAL, CHIP 4.7k 5% 1/10W
R1160	1-216-651-11	■	METAL, CHIP 1k 0.5% 1/10W
R1161	1-216-651-11	s	METAL, CHIP 1k 0.5% 1/10W
R1162	1-216-651-11	s	METAL, CHIP 1k 0.5% 1/10W
R1163	1-216-650-11	s	METAL, CHIP 910 0.5% 1/10W
R1164	1-216-650-11	s	METAL, CHIP 910 0.5% 1/10W
R1165	1-216-651-11	s	METAL, CHIP 1k 0.5% 1/10W
R1166	1-216-651-11	■	METAL, CHIP 1k 0.5% 1/10W
R1167	1-216-065-00	■	METAL, CHIP 4.7k 5% 1/10W
R1168	1-216-065-00	s	METAL, CHIP 4.7k [illegible] 1/10W
R1169	1-216-674-11	s	METAL, CHIP 9.1k 0.5% 1/10W
R1170	1-208-784-11	■	METAL, CHIP 1.2k 0.5% 1/10W
R1171	1-216-674-11	s	METAL, CHIP 9.1k 0.5% 1/10W
R1172	1-208-784-11	s	METAL, CHIP 1.2k 0.5% 1/10W

(AD-115A BOARD(ES-7(CE)))

Ref. No. or Q'ty	Part No.	SP	Description
R1173	1-216-057-00	s	METAL, CHIP 2.2k [illegible] 1/10W
R1174	1-216-057-00	s	METAL, CHIP 2.2k [illegible] 1/10W
R1175	1-208-774-11	s	METAL, CHIP 470 0.5% 1/10W
R1176	1-208-774-11	s	METAL, CHIP 470 0.5% 1/10W
R1177	1-216-650-11	s	METAL, CHIP 910 0.5% 1/10W
R1178	1-208-767-11	s	METAL, CHIP 240 0.5% 1/10W
R1179	1-216-647-11	s	METAL, CHIP 680 0.5% 1/10W
R1180	1-216-649-11	s	METAL, CHIP 820 0.5% 1/10W
R1181	1-216-651-11	s	METAL, CHIP 1k 0.5% 1/10W
R1182	1-216-647-11	s	METAL, CHIP 680 0.5% 1/10W
R1183	1-216-065-00	s	METAL, CHIP 4.7k 5% 1/10W
R1184	1-216-687-11	s	METAL, CHIP 33k 0.5% 1/10W
R1185	1-216-049-91	s	METAL, CHIP 1k 5% 1/10W
R1186	1-216-655-11	s	METAL, CHIP 1.5k 0.5% 1/10W
R1187	1-216-659-11	s	METAL, CHIP 2.2k 0.5% 1/10W
R1188	1-216-053-00	s	METAL, CHIP 1.5k 5% 1/10W
R1189	1-216-053-00	s	METAL, CHIP 1.5k 5% 1/10W
R1190	1-216-065-00	s	METAL, CHIP 4.7k 5% 1/10W
R1191	1-216-687-11	s	METAL, CHIP 33k 0.5% 1/10W
R1192	1-216-049-91	s	METAL, CHIP 1k [illegible] 1/10W
R1193	1-216-655-11	s	METAL, CHIP 1.5k 0.5% 1/10W
R1194	1-216-659-11	s	METAL, CHIP 2.2k 0.5% 1/10W
R1195	1-216-053-00	s	METAL, CHIP 1.5k [illegible] 1/10W
R1196	1-216-053-00	s	METAL, CHIP 1.5k [illegible] 1/10W
RB300-303	1-239-430-11	s	RESISTOR BLOCK, CHIP 4.7kx4
RB304-307	1-233-448-11	s	RESISTOR BLOCK, CHIP 22x8
RB400	1-239-621-11	s	RESISTOR BLOCK, CHIP 22x4
RB600-603	1-239-430-11	s	RESISTOR BLOCK, CHIP 4.7kx4
RB604-607	1-233-448-11	s	RESISTOR BLOCK, CHIP 22x8
RB700	1-239-621-11	s	RESISTOR BLOCK, CHIP 22x4
RB802	1-239-430-11	s	RESISTOR BLOCK, CHIP 4.7kx4
RV101	1-241-758-11	s	RES, ADJ, METAL 100
RV104	1-241-758-11	s	RES, ADJ, METAL 100
RV107	1-241-758-11	s	RES, ADJ, METAL 100
RV200	1-241-763-11	s	RES, ADJ, METAL 4.7k
RV202	1-241-760-11	s	RES, ADJ, METAL 470
RV203	1-241-764-11	s	RES, ADJ, METAL 10k
RV204	1-241-761-11	s	RES, ADJ, METAL 1k
RV205	1-241-761-11	s	RES, ADJ, METAL 1k
RV206	1-241-760-11	s	RES, ADJ, METAL 470
RV300	1-241-760-11	s	RES, ADJ, METAL 470
RV302	1-241-760-11	s	RES, ADJ, METAL 470
RV304	1-241-760-11	s	RES, ADJ, METAL 470
RV306	1-241-762-11	s	RES, ADJ, METAL 2.2k
RV307	1-241-762-11	s	RES, ADJ, METAL 2.2k
RV400	1-241-763-11	s	RES, ADJ, METAL 4.7k
RV500	1-241-764-11	s	RES, ADJ, METAL 10k
RV501	1-241-763-11	s	RES, ADJ, METAL 4.7k
RV503	1-241-761-11	s	RES, ADJ, METAL 1k
RV504	1-241-761-11	s	RES, ADJ, METAL 1k
RV505	1-241-760-11	s	RES, ADJ, METAL 470
RV506	1-241-760-11	s	RES, ADJ, METAL 470

(AD-115A BOARD(ES-7(CE)))

Ref. No. or Q'ty	Part No.	SP	Description
RV600	1-241-760-11	s	RES, ADJ, METAL 470
RV602	1-241-760-11	s	RES, ADJ, METAL 470
RV604	1-241-760-11	s	RES, ADJ, METAL 470
RV606	1-241-762-11	s	RES, ADJ, METAL 2.2k
RV607	1-241-762-11	s	RES, ADJ, METAL 2.2k
RV700	1-241-763-11	s	RES, ADJ, METAL 4.7k
X200	1-579-995-12	s	RESONATOR, CERAMIC 17.734475MHz
X201	1-760-268-11	s	VCO, CRYSTAL 17.734475MHz
X500	1-579-995-12	s	RESONATOR, CERAMIC 17.734475MHz
X501	1-760-268-11	s	VCO, CRYSTAL 17.734475MHz

AU-217 BOARD(ES-7(UC/J/CE))

Ref. No. or Q'ty	Part No.	SP	Description
1pc	A-8273-905-A	o	MOUNTED CIRCUIT BOARD, AU-217
9pcs	7-682-947-01	■	SCREW +PSW 3x6
2pcs	3-603-484-01	■	HANDLE,PCB
C1	1-135-159-21	s	TANTALUM, CHIP 10uF 10% 20V
C2-13	1-163-038-91	s	CERAMIC, CHIP 0.1uF 25V
C14-18	1-135-159-21	s	TANTALUM, CHIP 10uF 10% 20V
C19-26	1-163-038-91	s	CERAMIC, CHIP 0.1uF 25V
C27	1-111-111-11	s	ELECT 56uF 20% 50V
C28-33	1-163-038-91	s	CERAMIC, CHIP 0.1uF 25V
C34	1-164-232-11	s	CERAMIC, CHIP 0.01uF 10% 100V
C35	1-163-038-91	s	CERAMIC, CHIP 0.1uF 25V
C36	1-163-038-91	s	CERAMIC, CHIP 0.1uF 25V
C37	1-163-038-91	s	CERAMIC, CHIP 0.1uF 25V
C38	1-135-159-21	s	TANTALUM, CHIP 10uF 10% 20V
C39	1-163-038-91	s	CERAMIC, CHIP 0.1uF 25V
C40	1-135-159-21	s	TANTALUM, CHIP 10uF 10% 20V
C41	1-163-038-91	s	CERAMIC, CHIP 0.1uF 25V
C42	1-163-038-91	■	CERAMIC, CHIP 0.1uF 25V
C43	1-163-239-11	s	CERAMIC, CHIP 33pF 5% 50V
C44-60	1-163-038-91	s	CERAMIC, CHIP 0.1uF 25V
C62	1-163-038-91	s	CERAMIC, CHIP 0.1uF 25V
C63	1-111-111-11	s	ELECT 56uF 20% 50V
C64	1-163-038-91	s	CERAMIC, CHIP 0.1uF 25V
C65	1-163-038-91	s	CERAMIC, CHIP 0.1uF 25V
C66	1-135-159-21	s	TANTALUM, CHIP 10uF 10% 20V
C67	1-163-038-91	s	CERAMIC, CHIP 0.1uF 25V
C68	1-136-153-00	s	FILM 0.01uF 5% 50V
C69	1-163-235-11	s	CERAMIC, CHIP 22pF 5% 50V
C70	1-163-809-11	s	CERAMIC, CHIP 0.047uF 10% 25V
C71-91	1-163-038-91	s	CERAMIC, CHIP 0.1uF 25V
C92	1-163-229-11	s	CERAMIC, CHIP 12pF ■ 50V
C93	1-163-038-91	s	CERAMIC, CHIP 0.1uF 25V
C100-107	1-163-038-91	s	CERAMIC, CHIP 0.1uF 25V
C110-117	1-163-038-91	s	CERAMIC, CHIP 0.1uF 25V
C120-127	1-163-038-91	s	CERAMIC, CHIP 0.1uF 25V
C130-136	1-163-038-91	s	CERAMIC, CHIP 0.1uF 25V
C150-164	1-163-038-91	s	CERAMIC, CHIP 0.1uF 25V
C190-195	1-163-038-91	s	CERAMIC, CHIP 0.1uF 25V
C200	1-111-111-11	s	ELECT 56uF 20% 50V
C201	1-136-153-00	s	FILM 0.01uF 5% 50V
C202	1-111-085-11	■	ELECT 120uF 20% 35V
C203	1-162-673-11	s	CERAMIC 33pF 5% 50V
C204	1-111-111-11	s	ELECT 56uF 20% 50V
C205	1-136-153-00	s	FILM 0.01uF 5% 50V
C206	1-111-111-11	s	ELECT 56uF 20% 50V
C207	1-136-153-00	s	FILM 0.01uF 5% 50V
C208	1-136-153-00	s	FILM 0.01uF 5% 50V
C209	1-163-038-91	s	CERAMIC, CHIP 0.1uF 25V
C210	1-111-111-11	s	ELECT 56uF 20% 50V
C211	1-162-673-11	s	CERAMIC 33pF 5% 50V
C212	1-163-038-91	s	CERAMIC, CHIP 0.1uF 25V
C213	1-136-157-00	s	FILM 0.022uF 5% 50V
C214	1-128-357-11	s	ELECT 10uF 20% 16V
C215	1-136-153-00	s	FILM 0.01uF 5% 50V
C217	1-136-153-00	s	FILM 0.01uF 5% 50V
C218	1-136-153-00	■	FILM 0.01uF 5% 50V
C219	1-136-153-00	s	FILM 0.01uF 5% 50V
C220	1-163-038-91	s	CERAMIC, CHIP 0.1uF 25V

(AU-217 BOARD(ES-7(UC/J/CE)))

Ref. No. or Q'ty	Part No.	SP	Description
C221	1-128-357-11	s	ELECT 10uF 20% 16V
C222	1-136-159-00	s	FILM 0.033uF ■ 50V
C223	1-111-111-11	s	ELECT 56uF 20% 50V
C224	1-163-038-91	s	CERAMIC, CHIP 0.1uF 25V
C225	1-163-038-91	s	CERAMIC, CHIP 0.1uF 25V
C226	1-136-159-00	s	FILM 0.033uF ■ 50V
C227	1-111-111-11	s	ELECT 56uF 20% 50V
C228	1-136-153-00	s	FILM 0.01uF 5% 50V
C229	1-136-153-00	s	FILM 0.01uF ■ 50V
C230	1-162-673-11	s	CERAMIC 33pF 5% 50V
C231	1-111-111-11	s	ELECT 56uF 20% 50V
C232	1-136-153-00	s	FILM 0.01uF 5% 50V
C233	1-136-153-00	s	FILM 0.01uF 5% 50V
C234	1-111-111-11	s	ELECT 56uF 20% 50V
C235	1-163-038-91	s	CERAMIC, CHIP 0.1uF 25V
C236	1-162-673-11	s	CERAMIC 33pF ■ 50V
C237	1-136-157-00	s	FILM 0.022uF ■ 50V
C238	1-136-153-00	s	FILM 0.01uF 5% 50V
C240	1-136-153-00	s	FILM 0.01uF ■ 50V
C241	1-136-153-00	s	FILM 0.01uF 5% 50V
C242	1-136-153-00	s	FILM 0.01uF 5% 50V
C243	1-136-153-00	s	FILM 0.01uF 5% 50V
C244	1-111-111-11	s	ELECT 56uF 20% 50V
C245	1-111-085-11	■	ELECT 120uF 20% 35V
C246	1-163-038-91	■	CERAMIC, CHIP 0.1uF 25V
C300	1-111-111-11	s	ELECT 56uF 20% 50V
C301	1-136-153-00	s	FILM 0.01uF ■ 50V
C302	1-111-085-11	■	ELECT 120uF 20% 35V
C303	1-162-673-11	s	CERAMIC 33pF 5% 50V
C304	1-111-111-11	s	ELECT 56uF 20% 50V
C305	1-136-153-00	■	FILM 0.01uF 5% 50V
C306	1-111-111-11	s	ELECT 56uF 20% 50V
C307	1-136-153-00	s	FILM 0.01uF ■ 50V
C308	1-136-153-00	s	FILM 0.01uF ■ 50V
C309	1-163-038-91	s	CERAMIC, CHIP 0.1uF 25V
C310	1-111-111-11	s	ELECT 56uF 20% 50V
C311	1-162-673-11	■	CERAMIC 33pF 5% 50V
C312	1-163-038-91	s	CERAMIC, CHIP 0.1uF 25V
C313	1-136-157-00	s	FILM 0.022uF 5% 50V
C314	1-128-357-11	s	ELECT 10uF 20% 16V
C315	1-136-153-00	s	FILM 0.01uF 5% 50V
C317	1-136-153-00	■	FILM 0.01uF ■ 50V
C318	1-136-153-00	s	FILM 0.01uF ■ 50V
C319	1-136-153-00	s	FILM 0.01uF ■ 50V
C320	1-163-038-91	s	CERAMIC, CHIP 0.1uF 25V
C321	1-128-357-11	■	ELECT 10uF 20% 16V
C322	1-136-159-00	s	FILM 0.033uF 5% 50V
C323	1-111-111-11	s	ELECT 56uF 20% 50V
C324	1-163-038-91	s	CERAMIC, CHIP 0.1uF 25V
C325	1-163-038-91	s	CERAMIC, CHIP 0.1uF 25V
C326	1-136-159-00	■	FILM 0.033uF 5% 50V
C327	1-111-111-11	■	ELECT 56uF 20% 50V
C328	1-136-153-00	s	FILM 0.01uF ■ 50V
C329	1-136-153-00	s	FILM 0.01uF ■ 50V
C330	1-162-673-11	s	CERAMIC 33pF 5% 50V
C331	1-111-111-11	s	ELECT 56uF 20% 50V
C332	1-136-153-00	s	FILM 0.01uF ■ 50V
C333	1-136-153-00	s	FILM 0.01uF 5% 50V

(AU-217 BOARD(ES-7(UC/J/CE)))

Ref. No. or Q'ty	Part No.	SP	Description
C335	1-163-038-91	s	CERAMIC, CHIP 0.1uF 25V
C336	1-162-673-11	s	CERAMIC 33pF 5% 50V
C337	1-136-157-00	s	FILM 0.022uF 5% 50V
C338	1-136-153-00	s	FILM 0.01uF [illegible] 50V
C340	1-136-153-00	s	FILM 0.01uF 5% 50V
C341	1-136-153-00	s	FILM 0.01uF [illegible] 50V
C342	1-136-153-00	s	FILM 0.01uF 5% 50V
C343	1-136-153-00	s	FILM 0.01uF 5% 50V
C344	1-111-111-11	s	ELECT 56uF 20% 50V
C345	1-111-085-11	s	ELECT 120uF 20% 35V
C346	1-163-038-91	s	CERAMIC, CHIP 0.1uF 25V
C400	1-111-111-11	s	ELECT 56uF 20% 50V
C401	1-136-153-00	s	FILM 0.01uF 5% 50V
C402	1-111-085-11	s	ELECT 120uF 20% 35V
C403	1-162-673-11	s	CERAMIC 33pF [illegible] 50V
C404	1-111-111-11	s	ELECT 56uF 20% 50V
C405	1-136-153-00	s	FILM 0.01uF 5% 50V
C406	1-111-111-11	s	ELECT 56uF 20% 50V
C407	1-136-153-00	s	FILM 0.01uF 5% 50V
C408	1-136-153-00	s	FILM 0.01uF [illegible] 50V
C409	1-163-038-91	s	CERAMIC, CHIP 0.1uF 25V
C410	1-111-111-11	s	ELECT 56uF 20% 50V
C411	1-162-673-11	s	CERAMIC 33pF 5% 50V
C412	1-163-038-91	s	CERAMIC, CHIP 0.1uF 25V
C413	1-136-157-00	s	FILM 0.022uF 5% 50V
C414	1-128-357-11	s	ELECT 10uF 20% 16V
C415	1-136-153-00	s	FILM 0.01uF 5% 50V
C417	1-136-153-00	s	FILM 0.01uF 5% 50V
C418	1-136-153-00	s	FILM 0.01uF 5% 50V
C419	1-136-153-00	s	FILM 0.01uF 5% 50V
C420	1-163-038-91	s	CERAMIC, CHIP 0.1uF 25V
C421	1-128-357-11	s	ELECT 10uF 20% 16V
C422	1-136-159-00	s	FILM 0.033uF 5% 50V
C423	1-111-111-11	s	ELECT 56uF 20% 50V
C424	1-163-038-91	s	CERAMIC, CHIP 0.1uF 25V
C425	1-163-038-91	s	CERAMIC, CHIP 0.1uF 25V
C426	1-136-159-00	s	FILM 0.033uF [illegible] 50V
C427	1-111-111-11	s	ELECT 56uF 20% 50V
C428	1-136-153-00	s	FILM 0.01uF 5% 50V
C429	1-136-153-00	s	FILM 0.01uF 5% 50V
C430	1-162-673-11	s	CERAMIC 33pF 5% 50V
C431	1-111-111-11	s	ELECT 56uF 20% 50V
C432	1-136-153-00	s	FILM 0.01uF [illegible] 50V
C433	1-136-153-00	s	FILM 0.01uF 5% 50V
C434	1-111-111-11	s	ELECT 56uF 20% 50V
C435	1-163-038-91	s	CERAMIC, CHIP 0.1uF 25V
C436	1-162-673-11	s	CERAMIC 33pF 5% 50V
C437	1-136-157-00	s	FILM 0.022uF 5% 50V
C438	1-136-153-00	s	FILM 0.01uF [illegible] 50V
C440	1-136-153-00	s	FILM 0.01uF [illegible] 50V
C441	1-136-153-00	s	FILM 0.01uF 5% 50V
C442	1-136-153-00	s	FILM 0.01uF 5% 50V
C443	1-136-153-00	s	FILM 0.01uF 5% 50V
C444	1-111-111-11	s	ELECT 56uF 20% 50V
C445	1-111-085-11	s	ELECT 120uF 20% 35V
C446	1-163-038-91	s	CERAMIC, CHIP 0.1uF 25V
C500	1-111-111-11	s	ELECT 56uF 20% 50V
C501	1-136-153-00	s	FILM 0.01uF [illegible] 50V
C502	1-111-085-11	s	ELECT 120uF 20% 35V

(AU-217 BOARD(ES-7(UC/J/CE)))

Ref. No. or Q'ty	Part No.	SP	Description
C503	1-162-673-11	s	CERAMIC 33pF 5% 50V
C504	1-111-111-11	s	ELECT 56uF 20% 50V
C505	1-136-153-00	s	FILM 0.01uF 5% 50V
C506	1-111-111-11	s	ELECT 56uF 20% 50V
C507	1-136-153-00	s	FILM 0.01uF 5% 50V
C508	1-136-153-00	s	FILM 0.01uF [illegible] 50V
C509	1-163-038-91	s	CERAMIC, CHIP 0.1uF 25V
C510	1-111-111-11	s	ELECT 56uF 20% 50V
C511	1-162-673-11	s	CERAMIC 33pF 5% 50V
C512	1-163-038-91	s	CERAMIC, CHIP 0.1uF 25V
C513	1-136-157-00	s	FILM 0.022uF 5% 50V
C514	1-128-357-11	s	ELECT 10uF 20% 16V
C515	1-136-153-00	s	FILM 0.01uF [illegible] 50V
C517	1-136-153-00	s	FILM 0.01uF 5% 50V
C518	1-136-153-00	s	FILM 0.01uF 5% 50V
C519	1-136-153-00	s	FILM 0.01uF [illegible] 50V
C520	1-163-038-91	s	CERAMIC, CHIP 0.1uF 25V
C521	1-128-357-11	s	ELECT 10uF 20% 16V
C522	1-136-159-00	s	FILM 0.033uF 5% 50V
C523	1-111-111-11	s	ELECT 56uF 20% 50V
C524	1-163-038-91	s	CERAMIC, CHIP 0.1uF 25V
C525	1-163-038-91	s	CERAMIC, CHIP 0.1uF 25V
C526	1-136-159-00	s	FILM 0.033uF [illegible] 50V
C527	1-111-111-11	s	ELECT 56uF 20% 50V
C528	1-136-153-00	s	FILM 0.01uF 5% 50V
C529	1-136-153-00	s	FILM 0.01uF 5% 50V
C530	1-162-673-11	s	CERAMIC 33pF 5% 50V
C531	1-111-111-11	s	ELECT 56uF 20% 50V
C532	1-136-153-00	s	FILM 0.01uF 5% 50V
C533	1-136-153-00	s	FILM 0.01uF 5% 50V
C534	1-111-111-11	s	ELECT 56uF 20% 50V
C535	1-163-038-91	s	CERAMIC, CHIP 0.1uF 25V
C536	1-162-673-11	s	CERAMIC 33pF 5% 50V
C537	1-136-157-00	s	FILM 0.022uF 5% 50V
C538	1-136-153-00	s	FILM 0.01uF 5% 50V
C540	1-136-153-00	s	FILM 0.01uF 5% 50V
C541	1-136-153-00	s	FILM 0.01uF 5% 50V
C542	1-136-153-00	s	FILM 0.01uF [illegible] 50V
C543	1-136-153-00	s	FILM 0.01uF [illegible] 50V
C544	1-111-111-11	s	ELECT 56uF 20% 50V
C545	1-111-085-11	s	ELECT 120uF 20% 35V
C546	1-163-038-91	s	CERAMIC, CHIP 0.1uF 25V
C600	1-111-111-11	s	ELECT 56uF 20% 50V
C601	1-136-153-00	s	FILM 0.01uF 5% 50V
C602	1-111-085-11	s	ELECT 120uF 20% 35V
C603	1-162-673-11	s	CERAMIC 33pF [illegible] 50V
C604	1-111-111-11	s	ELECT 56uF 20% 50V
C605	1-136-153-00	s	FILM 0.01uF 5% 50V
C606	1-111-111-11	s	ELECT 56uF 20% 50V
C607	1-136-153-00	s	FILM 0.01uF 5% 50V
C608	1-136-153-00	s	FILM 0.01uF 5% 50V
C609	1-163-038-91	s	CERAMIC, CHIP 0.1uF 25V
C610	1-111-111-11	s	ELECT 56uF 20% 50V
C611	1-162-673-11	s	CERAMIC 33pF 5% 50V
C612	1-163-038-91	s	CERAMIC, CHIP 0.1uF 25V
C613	1-136-157-00	s	FILM 0.022uF 5% 50V
C614	1-128-357-11	s	ELECT 10uF 20% 16V
C615	1-136-153-00	s	FILM 0.01uF [illegible] 50V
C617	1-136-153-00	s	FILM 0.01uF [illegible] 50V

(AU-217 BOARD(ES-7(UC/J/CE)))

Ref. No. or Q'ty	Part No.	SP	Description
C618	1-136-153-00	■	FILM 0.01uF ■ 50V
C619	1-136-153-00	s	FILM 0.01uF 5% 50V
C620	1-163-038-91	s	CERAMIC, CHIP 0.1uF 25V
C621	1-128-357-11	s	ELECT 10uF 20% 16V
C622	1-136-159-00	s	FILM 0.033uF 5% 50V
C623	1-111-111-11	■	ELECT 56uF 20% 50V
C624	1-163-038-91	s	CERAMIC, CHIP 0.1uF 25V
C625	1-163-038-91	s	CERAMIC, CHIP 0.1uF 25V
C626	1-136-159-00	s	FILM 0.033uF 5% 50V
C627	1-111-111-11	s	ELECT 56uF 20% 50V
C628	1-136-153-00	■	FILM 0.01uF ■ 50V
C629	1-136-153-00	■	FILM 0.01uF ■ 50V
C630	1-162-673-11	s	CERAMIC 33pF 5% 50V
C631	1-111-111-11	s	ELECT 56uF 20% 50V
C632	1-136-153-00	s	FILM 0.01uF 5% 50V
C633	1-136-153-00	s	FILM 0.01uF 5% 50V
C634	1-111-111-11	s	ELECT 56uF 20% 50V
C635	1-163-038-91	s	CERAMIC, CHIP 0.1uF 25V
C636	1-162-673-11	s	CERAMIC 33pF 5% 50V
C637	1-136-157-00	s	FILM 0.022uF 5% 50V
C638	1-136-153-00	s	FILM 0.01uF 5% 50V
C640	1-136-153-00	s	FILM 0.01uF 5% 50V
C641	1-136-153-00	s	FILM 0.01uF ■ 50V
C642	1-136-153-00	s	FILM 0.01uF 5% 50V
C643	1-136-153-00	s	FILM 0.01uF 5% 50V
C644	1-111-111-11	s	ELECT 56uF 20% 50V
C645	1-111-085-11	s	ELECT 120uF 20% 35V
C646	1-163-038-91	s	CERAMIC, CHIP 0.1uF 25V
C700	1-136-153-00	s	FILM 0.01uF 5% 50V
C701	1-111-057-11	s	ELECT 120uF 20% 25V
C702	1-111-111-11	s	ELECT 56uF 20% 50V
C703	1-136-593-11	s	FILM 0.0033uF 1% 100V
C704	1-136-159-00	s	FILM 0.033uF ■ 50V
C705	1-111-111-11	s	ELECT 56uF 20% 50V
C706	1-111-204-11	s	ELECT 330uF 20% 35V
C707	1-162-673-11	s	CERAMIC 33pF 5% 50V
C708	1-111-057-11	s	ELECT 120uF 20% 25V
C709	1-136-153-00	s	FILM 0.01uF 5% 50V
C710	1-136-153-00	s	FILM 0.01uF 5% 50V
C711	1-136-593-11	s	FILM 0.0033uF 1% 100V
C712	1-111-204-11	s	ELECT 330uF 20% 35V
C713	1-136-593-11	s	FILM 0.0033uF 1% 100V
C714	1-111-111-11	s	ELECT 56uF 20% 50V
C715	1-136-153-00	s	FILM 0.01uF ■ 50V
C716	1-136-153-00	s	FILM 0.01uF 5% 50V
C717	1-111-057-11	s	ELECT 120uF 20% 25V
C718	1-111-057-11	s	ELECT 120uF 20% 25V
C719	1-163-038-91	s	CERAMIC, CHIP 0.1uF 25V
C720	1-136-153-00	s	FILM 0.01uF 5% 50V
C721	1-111-057-11	s	ELECT 120uF 20% 25V
C722	1-136-593-11	s	FILM 0.0033uF 1% 100V
C723	1-111-204-11	s	ELECT 330uF 20% 35V
C724	1-136-153-00	s	FILM 0.01uF 5% 50V
C725	1-162-673-11	s	CERAMIC 33pF 5% 50V
C726	1-111-057-11	s	ELECT 120uF 20% 25V
C727	1-136-153-00	s	FILM 0.01uF 5% 50V
C728	1-136-593-11	s	FILM 0.0033uF 1% 100V
C729	1-111-204-11	s	ELECT 330uF 20% 35V
C730	1-136-593-11	s	FILM 0.0033uF 1% 100V

(AU-217 BOARD(ES-7(UC/J/CE)))

Ref. No. or Q'ty	Part No.	SP	Description
C731	1-136-153-00	s	FILM 0.01uF ■ 50V
C732	1-136-153-00	s	FILM 0.01uF 5% 50V
C733	1-111-111-11	s	ELECT 56uF 20% 50V
C734	1-136-159-00	s	FILM 0.033uF ■ 50V
C735	1-111-057-11	■	ELECT 120uF 20% 25V
C736	1-111-111-11	■	ELECT 56uF 20% 50V
C737	1-136-593-11	s	FILM 0.0033uF ■ 100V
C738	1-136-159-00	s	FILM 0.033uF ■ 50V
C739	1-111-111-11	s	ELECT 56uF 20% 50V
C740	1-111-204-11	s	ELECT 330uF 20% 35V
C741	1-162-673-11	s	CERAMIC 33pF 5% 50V
C742	1-111-057-11	s	ELECT 120uF 20% 25V
C743	1-136-153-00	s	FILM 0.01uF 5% 50V
C744	1-136-153-00	s	FILM 0.01uF 5% 50V
C745	1-136-593-11	s	FILM 0.0033uF 1% 100V
C746	1-111-204-11	s	ELECT 330uF 20% 35V
C747	1-136-593-11	■	FILM 0.0033uF 1% 100V
C749	1-136-153-00	s	FILM 0.01uF ■ 50V
C750	1-136-159-00	s	FILM 0.033uF 5% 50V
C751	1-111-057-11	s	ELECT 120uF 20% 25V
C752	1-111-057-11	s	ELECT 120uF 20% 25V
C753	1-163-038-91	s	CERAMIC, CHIP 0.1uF 25V
C754	1-136-153-00	■	FILM 0.01uF 5% 50V
C755	1-111-057-11	s	ELECT 120uF 20% 25V
C756	1-136-593-11	s	FILM 0.0033uF 1% 100V
C757	1-111-204-11	s	ELECT 330uF 20% 35V
C758	1-136-153-00	s	FILM 0.01uF 5% 50V
C759	1-162-673-11	s	CERAMIC 33pF ■ 50V
C760	1-111-057-11	s	ELECT 120uF 20% 25V
C761	1-136-153-00	s	FILM 0.01uF 5% 50V
C762	1-136-593-11	s	FILM 0.0033uF 1% 100V
C763	1-111-204-11	■	ELECT 330uF 20% 35V
C764	1-136-593-11	s	FILM 0.0033uF 1% 100V
C765	1-136-153-00	s	FILM 0.01uF 5% 50V
C766	1-136-153-00	s	FILM 0.01uF 5% 50V
C767	1-111-111-11	s	ELECT 56uF 20% 50V
C768	1-163-038-91	■	CERAMIC, CHIP 0.1uF 25V
C769	1-136-153-00	s	FILM 0.01uF ■ 50V
C770	1-136-153-00	s	FILM 0.01uF ■ 50V
C771	1-111-111-11	s	ELECT 56uF 20% 50V
C772	1-111-111-11	s	ELECT 56uF 20% 50V
C773	1-111-111-11	■	ELECT 56uF 20% 50V
C774	1-111-111-11	s	ELECT 56uF 20% 50V
C775-780	1-136-153-00	s	FILM 0.01uF 5% 50V
C800	1-111-111-11	s	ELECT 56uF 20% 50V
C801	1-163-038-91	s	CERAMIC, CHIP 0.1uF 25V
C802	1-162-673-11	s	CERAMIC 33pF ■ 50V
C803	1-111-111-11	s	ELECT 56uF 20% 50V
C804	1-163-038-91	s	CERAMIC, CHIP 0.1uF 25V
C805	1-162-673-11	s	CERAMIC 33pF 5% 50V
C806	1-111-111-11	s	ELECT 56uF 20% 50V
C807	1-162-673-11	s	CERAMIC 33pF 5% 50V
C808	1-111-111-11	s	ELECT 56uF 20% 50V
C809	1-162-673-11	s	CERAMIC 33pF ■ 50V
C810	1-163-038-91	s	CERAMIC, CHIP 0.1uF 25V
C811	1-163-038-91	s	CERAMIC, CHIP 0.1uF 25V
C812	1-111-111-11	s	ELECT 56uF 20% 50V
C813	1-163-038-91	s	CERAMIC, CHIP 0.1uF 25V
C814	1-162-673-11	■	CERAMIC 33pF 5% 50V

(AU-217 BOARD(ES-7(UC/J/CE)))

Ref. No. or Q'ty	Part No.	SP	Description
C815	1-111-111-11	s	ELECT 56uF 20% 50V
C816	1-163-038-91	s	CERAMIC, CHIP 0.1uF 25V
C817	1-162-673-11	s	CERAMIC 33pF 5% 50V
C818	1-111-111-11	s	ELECT 56uF 20% 50V
C819	1-163-038-91	s	CERAMIC, CHIP 0.1uF 25V
C820	1-162-673-11	s	CERAMIC 33pF ■ 50V
C821	1-111-111-11	■	ELECT 56uF 20% 50V
C822	1-111-111-11	s	ELECT 56uF 20% 50V
C823	1-111-111-11	s	ELECT 56uF 20% 50V
C824	1-162-673-11	s	CERAMIC 33pF 5% 50V
C825	1-163-038-91	s	CERAMIC, CHIP 0.1uF 25V
C826	1-163-038-91	s	CERAMIC, CHIP 0.1uF 25V
C827	1-163-038-91	s	CERAMIC, CHIP 0.1uF 25V
C830	1-136-153-00	s	FILM 0.01uF 5% 50V
C831	1-111-111-11	s	ELECT 56uF 20% 50V
C832	1-136-153-00	s	FILM 0.01uF 5% 50V
C833	1-111-111-11	s	ELECT 56uF 20% 50V
C900	1-163-038-91	s	CERAMIC, CHIP 0.1uF 25V
C901	1-163-038-91	s	CERAMIC, CHIP 0.1uF 25V
C902	1-111-057-11	s	ELECT 120uF 20% 25V
C903	1-163-038-91	■	CERAMIC, CHIP 0.1uF 25V
C904	1-163-038-91	s	CERAMIC, CHIP 0.1uF 25V
C905	1-111-057-11	s	ELECT 120uF 20% 25V
C906	1-111-057-11	s	ELECT 120uF 20% 25V
C907	1-163-038-91	s	CERAMIC, CHIP 0.1uF 25V
C908	1-163-038-91	s	CERAMIC, CHIP 0.1uF 25V
C909	1-111-057-11	s	ELECT 120uF 20% 25V
C910	1-111-057-11	s	ELECT 120uF 20% 25V
C911	1-163-038-91	s	CERAMIC, CHIP 0.1uF 25V
C912	1-163-038-91	s	CERAMIC, CHIP 0.1uF 25V
C913	1-111-057-11	s	ELECT 120uF 20% 25V
C914	1-163-038-91	s	CERAMIC, CHIP 0.1uF 25V
C915	1-163-038-91	s	CERAMIC, CHIP 0.1uF 25V
C916	1-163-038-91	s	CERAMIC, CHIP 0.1uF 25V
C917	1-111-111-11	s	ELECT 56uF 20% 50V
C918	1-111-111-11	■	ELECT 56uF 20% 50V
CN1	1-506-474-11	s	CONNECTOR 9P, MALE
CN2	1-506-479-11	o	CONNECTOR 14P, MALE
CN800	1-506-479-11	■	CONNECTOR 14P, MALE
CN801	1-506-479-11	■	CONNECTOR 14P, MALE
CN802	1-506-472-11	s	CONNECTOR 7P, MALE
CN803	1-506-479-11	o	CONNECTOR 14P, MALE
CN804	1-506-479-11	o	CONNECTOR 14P, MALE
CN805	1-506-469-11	s	CONNECTOR 4P, MALE
CN901	1-778-261-11	o	CONNECTOR, BB 124P, MALE
CN903	1-778-261-11	o	CONNECTOR, BB 124P, MALE
CNI4	1-526-656-00	s	SOCKET, IC (DP) 20P
CNI5	1-526-662-21	o	SOCKET, IC (DP) 40P
CNI22	1-526-656-00	s	SOCKET, IC (DP) 20P
D1	8-719-800-76	s	DIODE 1SS226
D2	8-719-989-22	s	LED CL-150R-CD, RED
D3	8-719-989-22	s	LED CL-150R-CD, RED
D4	8-719-989-22	s	LED CL-150R-CD, RED
D5	8-719-989-22	s	LED CL-150R-CD, RED
D6	8-719-032-05	s	DIODE KV1460TL00
D200-207	8-719-941-23	s	DIODE DA204U
D208	8-719-911-19	s	DIODE 1SS119
D209	8-719-911-19	s	DIODE 1SS119

(AU-217 BOARD(ES-7(UC/J/CE)))

Ref. No. or Q'ty	Part No.	SP	Description
D300-307	8-719-941-23	s	DIODE DA204U
D308	8-719-911-19	s	DIODE 1SS119
D309	8-719-911-19	s	DIODE 1SS119
D400-407	8-719-941-23	s	DIODE DA204U
D408	8-719-911-19	s	DIODE 1SS119
D409	8-719-911-19	s	DIODE 1SS119
D500-507	8-719-941-23	s	DIODE DA204U
D508	8-719-911-19	s	DIODE 1SS119
D509	8-719-911-19	s	DIODE 1SS119
D600-607	8-719-941-23	s	DIODE DA204U
D608	8-719-911-19	s	DIODE 1SS119
D609	8-719-911-19	s	DIODE 1SS119
D700-705	8-719-911-19	s	DIODE 1SS119
D800-807	8-719-941-23	s	DIODE DA204U
D808	8-719-911-19	s	DIODE 1SS119
D809	8-719-911-19	s	DIODE 1SS119
D810	8-719-911-19	s	DIODE 1SS119
F900	⚠ 1-532-966-11	■	FUSE, 5A 125V
FB200	1-543-256-11	s	BEAD, FERRITE
FB201	1-543-256-11	s	BEAD, FERRITE
FB202	1-216-296-91	s	RES, CHIP 0
FB203	1-216-296-91	s	RES, CHIP 0
FB204	1-543-256-11	s	BEAD, FERRITE
FB205	1-543-256-11	s	BEAD, FERRITE
FB206	1-216-296-91	■	RES, CHIP 0
FB207-211	1-543-256-11	s	BEAD, FERRITE
FB300	1-543-256-11	s	BEAD, FERRITE
FB301	1-543-256-11	s	BEAD, FERRITE
FB302	1-216-296-91	■	RES, CHIP 0
FB303	1-216-296-91	■	RES, CHIP 0
FB304	1-543-256-11	s	BEAD, FERRITE
FB305	1-543-256-11	s	BEAD, FERRITE
FB306	1-216-296-91	s	RES, CHIP 0
FB307-311	1-543-256-11	s	BEAD, FERRITE
FB400	1-543-256-11	s	BEAD, FERRITE
FB401	1-543-256-11	s	BEAD, FERRITE
FB402	1-216-296-91	s	RES, CHIP 0
FB403	1-216-296-91	■	RES, CHIP 0
FB404	1-543-256-11	s	BEAD, FERRITE
FB405	1-543-256-11	s	BEAD, FERRITE
FB406	1-216-296-91	s	RES, CHIP 0
FB407-412	1-543-256-11	s	BEAD, FERRITE
FB500	1-543-256-11	s	BEAD, FERRITE
FB501	1-543-256-11	s	BEAD, FERRITE
FB502	1-216-296-91	s	RES, CHIP 0
FB503	1-216-296-91	s	RES, CHIP 0
FB504	1-543-256-11	s	BEAD, FERRITE
FB505	1-543-256-11	■	BEAD, FERRITE
FB506	1-216-296-91	s	RES, CHIP 0
FB507-512	1-543-256-11	■	BEAD, FERRITE
FB600	1-543-256-11	s	BEAD, FERRITE
FB601	1-543-256-11	s	BEAD, FERRITE
FB602	1-216-296-91	s	RES, CHIP 0

(AU-217 BOARD(ES-7(UC/J/CE)))

Ref. No. or Q'ty	Part No.	SP	Description
FB603	1-216-296-91	s	RES, CHIP 0
FB604	1-543-256-11	s	BEAD, FERRITE
FB605	1-543-256-11	s	BEAD, FERRITE
FB606	1-216-296-91	s	RES, CHIP 0
FB607-611	1-543-256-11	s	BEAD, FERRITE
FB700	1-543-256-11	s	BEAD, FERRITE
FB701	1-543-256-11	s	BEAD, FERRITE
FB702	1-543-256-11	s	BEAD, FERRITE
FB703	1-216-296-91	s	RES, CHIP ■
FB704	1-216-296-91	s	RES, CHIP 0
FB705	1-543-256-11	s	BEAD, FERRITE
FB706	1-543-256-11	■	BEAD, FERRITE
FB707	1-216-296-91	s	RES, CHIP 0
FB708	1-216-296-91	s	RES, CHIP 0
FB709	1-543-256-11	s	BEAD, FERRITE
IC1	8-759-099-76	s	IC TMP68301AFR-16
IC2	8-759-983-56	s	IC SN74AS138NS
IC3	8-759-983-56	■	IC SN74AS138NS
IC5	8-759-289-81	■	IC M27C1024-80XF1
IC6	8-752-364-81	s	IC CXK581000AM-70LL
IC7	8-752-364-81	s	IC CXK581000AM-70LL
IC8	8-752-364-81	s	IC CXK581000AM-70LL
IC9	8-752-364-81	s	IC CXK581000AM-70LL
IC10	8-759-385-51	s	IC IDT71321SA55J-TL
IC11	8-759-926-77	s	IC SN74HC541ANS
IC12	8-759-929-79	s	IC SN74LS05NS
IC13	8-759-925-80	s	IC SN74HC14ANS
IC14	8-759-925-90	s	IC SN74HC74ANS
IC15	8-759-936-32	s	IC SN74AS32NS
IC16	8-759-936-24	s	IC SN74AS04NS
IC17	8-759-936-32	s	IC SN74AS32NS
IC18	8-759-178-83	s	IC PST572FMT
IC19	8-759-521-15	s	IC MAX232CWE
IC20	8-759-154-60	s	IC UPD71055GB-10-3B4
IC21	8-759-008-13	s	IC MC74HC390F
IC23	8-759-250-81	s	IC TC5081AP
IC24	8-759-925-90	s	IC SN74HC74ANS
IC25	8-759-925-90	s	IC SN74HC74ANS
IC26	8-759-922-49	s	IC SN74LS74ANS
IC27	8-759-980-27	s	IC SN74ALS163BNS
IC28	8-759-980-27	s	IC SN74ALS163BNS
IC29	8-759-980-27	s	IC SN74ALS163BNS
IC30	8-759-980-27	s	IC SN74ALS163BNS
IC31	8-759-980-27	s	IC SN74ALS163BNS
IC32	8-759-929-97	s	IC SN74LS30NS
IC33	8-759-946-65	s	IC SN74ALS04BNS
IC34	8-759-973-85	s	IC SN74ALS74ANS
IC35	8-759-186-77	s	IC TC74VHC541F
IC36	8-759-186-77	s	IC TC74VHC541F
IC37	8-759-186-77	s	IC TC74VHC541F
IC38	8-759-934-27	■	IC SN74ALS138NS
IC39	8-759-934-27	s	IC SN74ALS138NS
IC40	8-759-929-97	s	IC SN74LS30NS
IC41	8-759-936-23	s	IC SN74AS02NS
IC42	8-759-927-29	s	IC SN74HCU04NS
IC43	8-759-250-81	s	IC TC5081AP
IC44	8-759-931-47	■	IC SN74LS628NS

(AU-217 BOARD(ES-7(UC/J/CE)))

Ref. No. or Q'ty	Part No.	SP	Description
IC45	8-759-398-30	s	IC YMF262-ME2
IC46	8-759-926-82	■	IC SN74HC574ANS
IC48	8-759-926-82	s	IC SN74HC574ANS
IC49	8-759-926-82	s	IC SN74HC574ANS
IC50	8-759-926-82	s	IC SN74HC574ANS
IC51	8-759-186-77	s	IC TC74VHC541F
IC52	8-759-186-77	s	IC TC74VHC541F
IC53	8-759-926-82	s	IC SN74HC574ANS
IC54	8-759-926-82	s	IC SN74HC574ANS
IC55	8-759-186-77	s	IC TC74VHC541F
IC56	8-759-186-77	s	IC TC74VHC541F
IC57	8-759-186-77	s	IC TC74VHC541F
IC70	8-759-930-57	s	IC SN74LS164NS
IC71	8-759-930-57	s	IC SN74LS164NS
IC72	8-759-503-05	s	IC SN74LS541NS
IC73	8-759-503-05	s	IC SN74LS541NS
IC74	8-759-930-58	s	IC SN74LS165ANS
IC75	8-759-930-58	s	IC SN74LS165ANS
IC76	8-759-980-27	s	IC SN74ALS163BNS
IC77	8-759-980-27	s	IC SN74ALS163BNS
IC78	8-759-930-57	s	IC SN74LS164NS
IC79	8-759-930-57	s	IC SN74LS164NS
IC81	8-759-926-82	s	IC SN74HC574ANS
IC82	8-759-926-82	s	IC SN74HC574ANS
IC83	8-759-930-58	s	IC SN74LS165ANS
IC84	8-759-930-58	s	IC SN74LS165ANS
IC85	8-759-926-17	s	IC SN74HC153ANS
IC86	8-759-926-17	s	IC SN74HC153ANS
IC90	8-759-926-82	s	IC SN74HC574ANS
IC100	8-752-352-30	s	IC CXD2705AQ
IC101	8-752-352-30	■	IC CXD2705AQ
IC102	8-752-352-30	s	IC CXD2705AQ
IC103	8-752-352-30	s	IC CXD2705AQ
IC104	8-752-352-30	s	IC CXD2705AQ
IC105	8-752-352-30	s	IC CXD2705AQ
IC106	8-759-503-05	s	IC SN74LS541NS
IC107	8-759-503-05	s	IC SN74LS541NS
IC110	8-752-352-30	s	IC CXD2705AQ
IC111	8-752-352-30	s	IC CXD2705AQ
IC112	8-752-352-30	s	IC CXD2705AQ
IC113	8-752-352-30	s	IC CXD2705AQ
IC114	8-752-352-30	s	IC CXD2705AQ
IC115	8-752-352-30	■	IC CXD2705AQ
IC116	8-759-503-05	s	IC SN74LS541NS
IC117	8-759-503-05	s	IC SN74LS541NS
IC120	8-752-352-30	s	IC CXD2705AQ
IC121	8-752-352-30	s	IC CXD2705AQ
IC122	8-752-352-30	s	IC CXD2705AQ
IC123	8-752-352-30	s	IC CXD2705AQ
IC124	8-752-352-30	s	IC CXD2705AQ
IC125	8-752-352-30	s	IC CXD2705AQ
IC126	8-759-503-05	■	IC SN74LS541NS
IC127	8-759-503-05	s	IC SN74LS541NS
IC130	8-759-043-67	s	IC CXD8307Q
IC131	8-752-352-30	s	IC CXD2705AQ
IC132	8-752-352-30	s	IC CXD2705AQ
IC133	8-752-352-30	s	IC CXD2705AQ
IC134	8-759-503-05	s	IC SN74LS541NS
IC135	8-759-278-02	s	IC MSM514256BL-70ZS

(AU-217 BOARD(ES-7(UC/J/CE)))

Ref. No. or Q'ty	Part No.	SP	Description
IC136	8-759-278-02	s	IC MSM514256BL-70ZS
IC200	8-759-708-05	s	IC NJM78L05A
IC201	8-759-982-03	s	IC RC5532DD
IC202	8-759-982-03	s	IC RC5532DD
IC203	8-759-925-90	s	IC SN74HC74ANS
IC204	8-759-634-51	s	IC M5218AP
IC208	8-759-989-42	s	IC AK5326-VP
IC209	8-759-982-03	s	IC RC5532DD
IC210	8-759-982-03	s	IC RC5532DD
IC212	8-759-700-65	s	IC NJM79L05A
IC300	8-759-708-05	s	IC NJM78L05A
IC301	8-759-982-03	■	IC RC5532DD
IC302	8-759-982-03	s	IC RC5532DD
IC303	8-759-925-90	s	IC SN74HC74ANS
IC304	8-759-634-51	s	IC M5218AP
IC308	8-759-989-42	s	IC AK5326-VP
IC309	8-759-982-03	s	IC RC5532DD
IC310	8-759-982-03	s	IC RC5532DD
IC312	8-759-700-65	s	IC NJM79L05A
IC400	8-759-708-05	s	IC NJM78L05A
IC401	8-759-982-03	s	IC RC5532DD
IC402	8-759-982-03	s	IC RC5532DD
IC403	8-759-925-90	s	IC SN74HC74ANS
IC404	8-759-634-51	■	IC M5218AP
IC408	8-759-989-42	■	IC AK5326-VP
IC409	8-759-982-03	s	IC RC5532DD
IC410	8-759-982-03	s	IC RC5532DD
IC412	8-759-700-65	s	IC NJM79L05A
IC500	8-759-708-05	s	IC NJM78L05A
IC501	8-759-982-03	■	IC RC5532DD
IC502	8-759-982-03	s	IC RC5532DD
IC503	8-759-925-90	s	IC SN74HC74ANS
IC504	8-759-634-51	s	IC M5218AP
IC508	8-759-989-42	s	IC AK5326-VP
IC509	8-759-982-03	■	IC RC5532DD
IC510	8-759-982-03	s	IC RC5532DD
IC512	8-759-700-65	s	IC NJM79L05A
IC600	8-759-708-05	s	IC NJM78L05A
IC601	8-759-982-03	s	IC RC5532DD
IC602	8-759-982-03	s	IC RC5532DD
IC603	8-759-925-90	s	IC SN74HC74ANS
IC604	8-759-634-51	s	IC M5218AP
IC608	8-759-989-42	■	IC AK5326-VP
IC609	8-759-982-03	s	IC RC5532DD
IC610	8-759-982-03	s	IC RC5532DD
IC612	8-759-700-65	■	IC NJM79L05A
IC700	8-759-634-51	s	IC M5218AP
IC701	8-759-708-05	■	IC NJM78L05A
IC702	8-759-982-03	■	IC RC5532DD
IC703	8-759-158-99	s	IC SSM-2142P
IC704	8-759-982-03	s	IC RC5532DD
IC705	8-759-348-81	s	IC SM5843AS1-E2
IC706	8-759-158-87	s	IC PCM69AP
IC707	8-759-158-99	s	IC SSM-2142P
IC708	8-759-982-03	s	IC RC5532DD
IC709	8-759-634-51	s	IC M5218AP
IC710	8-759-708-05	s	IC NJM78L05A
IC711	8-759-982-03	s	IC RC5532DD
IC712	8-759-158-99	s	IC SSM-2142P

(AU-217 BOARD(ES-7(UC/J/CE)))

Ref. No. or Q'ty	Part No.	SP	Description
IC713	8-759-982-03	s	IC RC5532DD
IC714	8-759-348-81	■	IC SM5843AS1-E2
IC715	8-759-158-87	s	IC PCM69AP
IC716	8-759-158-99	s	IC SSM-2142P
IC717	8-759-982-03	s	IC RC5532DD
IC718	8-759-929-73	s	IC SN74LS00NS
IC719	8-759-982-03	s	IC RC5532DD
IC720	8-759-982-03	s	IC RC5532DD
IC800	8-759-634-51	s	IC M5218AP
IC801	8-759-634-51	s	IC M5218AP
IC802	8-759-634-51	■	IC M5218AP
IC803	8-759-634-51	■	IC M5218AP
IC805	8-759-634-51	s	IC M5218AP
IC806	8-759-208-07	s	IC TC4051BFHB
IC807	8-759-208-07	■	IC TC4051BFHB
IC808	8-759-168-20	s	IC TA78L09S
IC809	8-759-700-68	s	IC NJM79L09A
IC900	8-759-939-92	s	IC SN74ALS541NS
IC901	8-759-329-82	s	IC SN74ALS00ANS-E05
IC902	8-759-926-77	s	IC SN74HC541ANS
IC903	8-759-926-77	s	IC SN74HC541ANS
IC904	8-759-926-49	s	IC SN74HC245NS
L1-5	1-410-478-11	s	INDUCTOR 47uH
L200	1-410-478-11	s	INDUCTOR 47uH
L300	1-410-478-11	■	INDUCTOR 47uH
L400	1-410-478-11	s	INDUCTOR 47uH
L500	1-410-478-11	s	INDUCTOR 47uH
L600	1-410-478-11	s	INDUCTOR 47uH
L700	1-410-478-11	s	INDUCTOR 47uH
L900	1-500-202-11	s	BEAD, FERRITE
L901	1-500-202-11	s	BEAD, FERRITE
L903-907	1-500-202-11	s	BEAD, FERRITE
Q200	8-729-027-31	s	TRANSISTOR DTA124EKA-T146
Q201	8-729-027-53	s	TRANSISTOR DTC124TKA-T146
Q202	8-729-027-53	s	TRANSISTOR DTC124TKA-T146
Q203	8-729-027-53	■	TRANSISTOR DTC124TKA-T146
Q204	8-729-027-53	s	TRANSISTOR DTC124TKA-T146
Q205	8-729-027-53	s	TRANSISTOR DTC124TKA-T146
Q300	8-729-027-31	s	TRANSISTOR DTA124EKA-T146
Q301-305	8-729-027-53	s	TRANSISTOR DTC124TKA-T146
Q400	8-729-027-31	s	TRANSISTOR DTA124EKA-T146
Q401-407	8-729-027-53	s	TRANSISTOR DTC124TKA-T146
Q408	8-729-027-31	s	TRANSISTOR DTA124EKA-T146
Q409	8-729-027-53	s	TRANSISTOR DTC124TKA-T146
Q500	8-729-027-31	s	TRANSISTOR DTA124EKA-T146
Q501-507	8-729-027-53	s	TRANSISTOR DTC124TKA-T146
Q508	8-729-027-31	■	TRANSISTOR DTA124EKA-T146
Q509	8-729-027-53	s	TRANSISTOR DTC124TKA-T146
Q600	8-729-027-31	s	TRANSISTOR DTA124EKA-T146
Q601-605	8-729-027-53	■	TRANSISTOR DTC124TKA-T146
Q701	8-729-027-53	■	TRANSISTOR DTC124TKA-T146
Q702	8-729-119-78	s	TRANSISTOR 2SC2785-HFE
Q801	8-729-027-53	s	TRANSISTOR DTC124TKA-T146
Q802	8-729-119-78	s	TRANSISTOR 2SC2785-HFE
R1	1-216-667-11	s	METAL, CHIP 4.7k 0.5% 1/10W
R2	1-216-651-11	s	METAL, CHIP 1k 0.5% 1/10W
R3	1-216-651-11	■	METAL, CHIP 1k 0.5% 1/10W
R4	1-216-667-11	s	METAL, CHIP 4.7k 0.5% 1/10W

(AU-217 BOARD(ES-7(UC/J/CE)))

Ref. No. or Q'ty	Part No.	SP	Description
R5	1-216-611-11	s	METAL, CHIP 22 0.5% 1/10W
R8	1-216-611-11	s	METAL, CHIP 22 0.5% 1/10W
R9	1-216-667-11	s	METAL, CHIP 4.7k 0.5% 1/10W
R10	1-216-667-11	s	METAL, CHIP 4.7k 0.5% 1/10W
R11	1-216-667-11	s	METAL, CHIP 4.7k 0.5% 1/10W
R12	1-216-667-11	s	METAL, CHIP 4.7k 0.5% 1/10W
R13	1-216-635-11	■	METAL, CHIP 220 0.5% 1/10W
R14	1-216-635-11	s	METAL, CHIP 220 0.5% 1/10W
R15	1-216-635-11	s	METAL, CHIP 220 0.5% 1/10W
R16	1-216-635-11	s	METAL, CHIP 220 0.5% 1/10W
R17	1-216-667-11	s	METAL, CHIP 4.7k 0.5% 1/10W
R18	1-216-667-11	s	METAL, CHIP 4.7k 0.5% 1/10W
R19	1-216-627-11	s	METAL, CHIP 100 0.5% 1/10W
R20	1-216-627-11	s	METAL, CHIP 100 0.5% 1/10W
R21	1-216-699-11	s	METAL, CHIP 100k 0.5% 1/10W
R22	1-208-784-11	s	METAL, CHIP 1.2k 0.5% 1/10W
R23	1-216-667-11	s	METAL, CHIP 4.7k 0.5% 1/10W
R24	1-216-667-11	s	METAL, CHIP 4.7k 0.5% 1/10W
R25	1-216-611-11	s	METAL, CHIP 22 0.5% 1/10W
R26	1-216-659-11	s	METAL, CHIP 2.2k 0.5% 1/10W
R27	1-208-806-11	■	METAL, CHIP 10k 0.5% 1/10W
R28	1-216-647-11	s	METAL, CHIP 680 0.5% 1/10W
R29	1-208-806-11	s	METAL, CHIP 10k 0.5% 1/10W
R30	1-216-667-11	s	METAL, CHIP 4.7k 0.5% 1/10W
R31	1-216-611-11	s	METAL, CHIP 22 0.5% 1/10W
R32	1-208-854-11	s	METAL, CHIP 1M 0.5% 1/10W
R33	1-216-667-11	s	METAL, CHIP 4.7k 0.5% 1/10W
R34	1-216-667-11	■	METAL, CHIP 4.7k 0.5% 1/10W
R35	1-216-667-11	s	METAL, CHIP 4.7k 0.5% 1/10W
R36	1-216-667-11	s	METAL, CHIP 4.7k 0.5% 1/10W
R37	1-216-663-11	s	METAL, CHIP 3.3k 0.5% 1/10W
R38	1-216-659-11	s	METAL, CHIP 2.2k 0.5% 1/10W
R150-164	1-208-854-11	s	METAL, CHIP 1M 0.5% 1/10W
R165-176	1-208-774-11	s	METAL, CHIP 470 0.5% 1/10W
R190-195	1-208-854-11	s	METAL, CHIP 1M 0.5% 1/10W
R200	1-208-806-11	s	METAL, CHIP 10k 0.5% 1/10W
R201	1-249-675-11	s	CARBON 1.2k [illegible] 1/2W
R202	1-249-675-11	s	CARBON 1.2k 5% 1/2W
R203	1-216-619-11	■	METAL, CHIP 47 0.5% 1/10W
R204	1-208-784-11	s	METAL, CHIP 1.2k 0.5% 1/10W
R205	1-216-659-11	s	METAL, CHIP 2.2k 0.5% 1/10W
R206	1-208-806-11	s	METAL, CHIP 10k 0.5% 1/10W
R207	1-208-806-11	s	METAL, CHIP 10k 0.5% 1/10W
R208	1-208-806-11	s	METAL, CHIP 10k 0.5% 1/10W
R209	1-216-627-11	s	METAL, CHIP 100 0.5% 1/10W
R210	1-216-627-11	s	METAL, CHIP 100 0.5% 1/10W
R211	1-208-806-11	s	METAL, CHIP 10k 0.5% 1/10W
R212	1-216-619-11	s	METAL, CHIP 47 0.5% 1/10W
R213	1-208-806-11	s	METAL, CHIP 10k 0.5% 1/10W
R216	1-216-619-11	s	METAL, CHIP 47 0.5% 1/10W
R217	1-216-667-11	s	METAL, CHIP 4.7k 0.5% 1/10W
R219	1-208-784-11	s	METAL, CHIP 1.2k 0.5% 1/10W
R220	1-216-699-11	s	METAL, CHIP 100k 0.5% 1/10W
R221	1-208-806-11	s	METAL, CHIP 10k 0.5% 1/10W
R222	1-208-806-11	s	METAL, CHIP 10k 0.5% 1/10W
R223	1-216-699-11	s	METAL, CHIP 100k 0.5% 1/10W
R224	1-216-667-11	s	METAL, CHIP 4.7k 0.5% 1/10W
R225	1-208-806-11	s	METAL, CHIP 10k 0.5% 1/10W
R226	1-216-699-11	s	METAL, CHIP 100k 0.5% 1/10W

(AU-217 BOARD(ES-7(UC/J/CE)))

Ref. No. or Q'ty	Part No.	SP	Description
R227	1-208-806-11	s	METAL, CHIP 10k 0.5% 1/10W
R228	1-208-806-11	s	METAL, CHIP 10k 0.5% 1/10W
R229	1-216-667-11	s	METAL, CHIP 4.7k 0.5% 1/10W
R230	1-216-699-11	s	METAL, CHIP 100k 0.5% 1/10W
R231	1-208-806-11	s	METAL, CHIP 10k 0.5% 1/10W
R232	1-216-667-11	s	METAL, CHIP 4.7k 0.5% 1/10W
R233	1-216-699-11	s	METAL, CHIP 100k 0.5% 1/10W
R234	1-208-806-11	s	METAL, CHIP 10k 0.5% 1/10W
R235	1-216-657-11	■	METAL, CHIP 1.8k 0.5% 1/10W
R236	1-216-699-11	■	METAL, CHIP 100k 0.5% 1/10W
R237	1-208-806-11	■	METAL, CHIP 10k 0.5% 1/10W
R238	1-249-675-11	s	CARBON 1.2k 5% 1/2W
R239	1-249-675-11	s	CARBON 1.2k 5% 1/2W
R240	1-216-619-11	s	METAL, CHIP 47 0.5% 1/10W
R241	1-208-784-11	s	METAL, CHIP 1.2k 0.5% 1/10W
R242	1-216-659-11	s	METAL, CHIP 2.2k 0.5% 1/10W
R243	1-216-611-11	s	METAL, CHIP 22 0.5% 1/10W
R244	1-208-806-11	s	METAL, CHIP 10k 0.5% 1/10W
R245	1-208-806-11	s	METAL, CHIP 10k 0.5% 1/10W
R246	1-208-806-11	s	METAL, CHIP 10k 0.5% 1/10W
R247	1-216-627-11	s	METAL, CHIP 100 0.5% 1/10W
R248	1-216-627-11	s	METAL, CHIP 100 0.5% 1/10W
R249	1-216-611-11	■	METAL, CHIP 22 0.5% 1/10W
R250	1-216-619-11	■	METAL, CHIP 47 0.5% 1/10W
R251	1-208-806-11	s	METAL, CHIP 10k 0.5% 1/10W
R252	1-216-611-11	s	METAL, CHIP 22 0.5% 1/10W
R255	1-216-619-11	■	METAL, CHIP 47 0.5% 1/10W
R256	1-208-784-11	■	METAL, CHIP 1.2k 0.5% 1/10W
R257	1-208-806-11	s	METAL, CHIP 10k 0.5% 1/10W
R258	1-216-611-11	s	METAL, CHIP 22 0.5% 1/10W
R260	1-216-699-11	s	METAL, CHIP 100k 0.5% 1/10W
R261	1-208-806-11	■	METAL, CHIP 10k 0.5% 1/10W
R262	1-208-806-11	s	METAL, CHIP 10k 0.5% 1/10W
R263	1-216-671-11	s	METAL, CHIP 6.8k 0.5% 1/10W
R264	1-216-663-11	s	METAL, CHIP 3.3k 0.5% 1/10W
R265	1-216-663-11	s	METAL, CHIP 3.3k 0.5% 1/10W
R266	1-216-295-91	■	RES, CHIP 0
R267	1-216-295-91	■	RES, CHIP 0
R300	1-208-806-11	■	METAL, CHIP 10k 0.5% 1/10W
R301	1-249-675-11	s	CARBON 1.2k 5% 1/2W
R302	1-249-675-11	s	CARBON 1.2k 5% 1/2W
R303	1-216-619-11	■	METAL, CHIP 47 0.5% 1/10W
R304	1-208-784-11	s	METAL, CHIP 1.2k 0.5% 1/10W
R305	1-216-659-11	■	METAL, CHIP 2.2k 0.5% 1/10W
R306	1-208-806-11	s	METAL, CHIP 10k 0.5% 1/10W
R307	1-208-806-11	■	METAL, CHIP 10k 0.5% 1/10W
R308	1-208-806-11	■	METAL, CHIP 10k 0.5% 1/10W
R309	1-216-627-11	s	METAL, CHIP 100 0.5% 1/10W
R310	1-216-627-11	■	METAL, CHIP 100 0.5% 1/10W
R311	1-208-806-11	s	METAL, CHIP 10k 0.5% 1/10W
R312	1-216-619-11	s	METAL, CHIP 47 0.5% 1/10W
R313	1-208-806-11	s	METAL, CHIP 10k 0.5% 1/10W
R316	1-216-619-11	■	METAL, CHIP 47 0.5% 1/10W
R317	1-216-667-11	s	METAL, CHIP 4.7k 0.5% 1/10W
R319	1-208-784-11	s	METAL, CHIP 1.2k 0.5% 1/10W
R320	1-216-699-11	s	METAL, CHIP 100k 0.5% 1/10W
R321	1-208-806-11	s	METAL, CHIP 10k 0.5% 1/10W
R322	1-208-806-11	s	METAL, CHIP 10k 0.5% 1/10W
R323	1-216-699-11	s	METAL, CHIP 100k 0.5% 1/10W

(AU-217 BOARD(ES-7(UC/J/CE)))

Ref. No. or Q'ty	Part No.	SP	Description
R324	1-216-667-11	s	METAL, CHIP 4.7k 0.5% 1/10W
R325	1-208-806-11	s	METAL, CHIP 10k 0.5% 1/10W
R326	1-216-699-11	s	METAL, CHIP 100k 0.5% 1/10W
R327	1-208-806-11	s	METAL, CHIP 10k 0.5% 1/10W
R328	1-208-806-11	s	METAL, CHIP 10k 0.5% 1/10W
R329	1-216-667-11	s	METAL, CHIP 4.7k 0.5% 1/10W
R330	1-216-699-11	s	METAL, CHIP 100k 0.5% 1/10W
R331	1-208-806-11	s	METAL, CHIP 10k 0.5% 1/10W
R332	1-216-667-11	s	METAL, CHIP 4.7k 0.5% 1/10W
R333	1-216-699-11	s	METAL, CHIP 100k 0.5% 1/10W
R334	1-208-806-11	s	METAL, CHIP 10k 0.5% 1/10W
R335	1-216-657-11	s	METAL, CHIP 1.8k 0.5% 1/10W
R336	1-216-699-11	s	METAL, CHIP 100k 0.5% 1/10W
R337	1-208-806-11	s	METAL, CHIP 10k 0.5% 1/10W
R338	1-249-675-11	s	CARBON 1.2k 5% 1/2W
R339	1-249-675-11	s	CARBON 1.2k 5% 1/2W
R340	1-216-619-11	s	METAL, CHIP 47 0.5% 1/10W
R341	1-208-784-11	s	METAL, CHIP 1.2k 0.5% 1/10W
R342	1-216-659-11	s	METAL, CHIP 2.2k 0.5% 1/10W
R343	1-216-611-11	s	METAL, CHIP 22 0.5% 1/10W
R344	1-208-806-11	s	METAL, CHIP 10k 0.5% 1/10W
R345	1-208-806-11	s	METAL, CHIP 10k 0.5% 1/10W
R346	1-208-806-11	s	METAL, CHIP 10k 0.5% 1/10W
R347	1-216-627-11	s	METAL, CHIP 100 0.5% 1/10W
R348	1-216-627-11	s	METAL, CHIP 100 0.5% 1/10W
R349	1-216-611-11	s	METAL, CHIP 22 0.5% 1/10W
R350	1-216-619-11	s	METAL, CHIP 47 0.5% 1/10W
R351	1-208-806-11	s	METAL, CHIP 10k 0.5% 1/10W
R352	1-216-611-11	s	METAL, CHIP 22 0.5% 1/10W
R355	1-216-619-11	s	METAL, CHIP 47 0.5% 1/10W
R356	1-208-784-11	s	METAL, CHIP 1.2k 0.5% 1/10W
R357	1-208-806-11	s	METAL, CHIP 10k 0.5% 1/10W
R358	1-216-611-11	s	METAL, CHIP 22 0.5% 1/10W
R360	1-216-699-11	s	METAL, CHIP 100k 0.5% 1/10W
R361	1-208-806-11	s	METAL, CHIP 10k 0.5% 1/10W
R362	1-208-806-11	■	METAL, CHIP 10k 0.5% 1/10W
R363	1-216-671-11	s	METAL, CHIP 6.8k 0.5% 1/10W
R364	1-216-663-11	s	METAL, CHIP 3.3k 0.5% 1/10W
R365	1-216-663-11	■	METAL, CHIP 3.3k 0.5% 1/10W
R366	1-216-295-91	s	RES, CHIP 0
R367	1-216-295-91	s	RES, CHIP 0
R400	1-208-806-11	s	METAL, CHIP 10k 0.5% 1/10W
R401	1-249-675-11	s	CARBON 1.2k 5% 1/2W
R402	1-249-675-11	■	CARBON 1.2k 5% 1/2W
R403	1-216-619-11	s	METAL, CHIP 47 0.5% 1/10W
R404	1-208-784-11	s	METAL, CHIP 1.2k 0.5% 1/10W
R405	1-216-659-11	s	METAL, CHIP 2.2k 0.5% 1/10W
R406	1-208-806-11	s	METAL, CHIP 10k 0.5% 1/10W
R407	1-208-806-11	s	METAL, CHIP 10k 0.5% 1/10W
R408	1-208-806-11	s	METAL, CHIP 10k 0.5% 1/10W
R409	1-216-627-11	s	METAL, CHIP 100 0.5% 1/10W
R410	1-216-627-11	■	METAL, CHIP 100 0.5% 1/10W
R411	1-208-806-11	s	METAL, CHIP 10k 0.5% 1/10W
R412	1-216-619-11	s	METAL, CHIP 47 0.5% 1/10W
R413	1-208-806-11	s	METAL, CHIP 10k 0.5% 1/10W
R414	1-208-806-11	s	METAL, CHIP 10k 0.5% 1/10W
R415	1-208-806-11	s	METAL, CHIP 10k 0.5% 1/10W
R416	1-216-619-11	s	METAL, CHIP 47 0.5% 1/10W
R417	1-216-667-11	s	METAL, CHIP 4.7k 0.5% 1/10W

(AU-217 BOARD(ES-7(UC/J/CE)))

Ref. No. or Q'ty	Part No.	SP	Description
R418	1-216-699-11	■	METAL, CHIP 100k 0.5% 1/10W
R419	1-208-784-11	s	METAL, CHIP 1.2k 0.5% 1/10W
R420	1-216-699-11	s	METAL, CHIP 100k 0.5% 1/10W
R421	1-208-806-11	s	METAL, CHIP 10k 0.5% 1/10W
R422	1-208-806-11	s	METAL, CHIP 10k 0.5% 1/10W
R423	1-216-699-11	■	METAL, CHIP 100k 0.5% 1/10W
R424	1-216-667-11	s	METAL, CHIP 4.7k 0.5% 1/10W
R425	1-208-806-11	s	METAL, CHIP 10k 0.5% 1/10W
R426	1-216-699-11	s	METAL, CHIP 100k 0.5% 1/10W
R427	1-208-806-11	s	METAL, CHIP 10k 0.5% 1/10W
R428	1-208-806-11	■	METAL, CHIP 10k 0.5% 1/10W
R429	1-216-667-11	■	METAL, CHIP 4.7k 0.5% 1/10W
R430	1-216-699-11	s	METAL, CHIP 100k 0.5% 1/10W
R431	1-208-806-11	■	METAL, CHIP 10k 0.5% 1/10W
R432	1-216-667-11	s	METAL, CHIP 4.7k 0.5% 1/10W
R433	1-216-699-11	s	METAL, CHIP 100k 0.5% 1/10W
R434	1-208-806-11	s	METAL, CHIP 10k 0.5% 1/10W
R435	1-216-657-11	■	METAL, CHIP 1.8k 0.5% 1/10W
R436	1-216-699-11	■	METAL, CHIP 100k 0.5% 1/10W
R437	1-208-806-11	s	METAL, CHIP 10k 0.5% 1/10W
R438	1-249-675-11	■	CARBON 1.2k 5% 1/2W
R439	1-249-675-11	s	CARBON 1.2k 5% 1/2W
R440	1-216-619-11	s	METAL, CHIP 47 0.5% 1/10W
R441	1-208-784-11	s	METAL, CHIP 1.2k 0.5% 1/10W
R442	1-216-659-11	s	METAL, CHIP 2.2k 0.5% 1/10W
R443	1-216-611-11	s	METAL, CHIP 22 0.5% 1/10W
R444	1-208-806-11	s	METAL, CHIP 10k 0.5% 1/10W
R445	1-208-806-11	s	METAL, CHIP 10k 0.5% 1/10W
R446	1-208-806-11	s	METAL, CHIP 10k 0.5% 1/10W
R447	1-216-627-11	s	METAL, CHIP 100 0.5% 1/10W
R448	1-216-627-11	s	METAL, CHIP 100 0.5% 1/10W
R449	1-216-611-11	s	METAL, CHIP 22 0.5% 1/10W
R450	1-216-619-11	s	METAL, CHIP 47 0.5% 1/10W
R451	1-208-806-11	s	METAL, CHIP 10k 0.5% 1/10W
R452	1-216-611-11	s	METAL, CHIP 22 0.5% 1/10W
R455	1-216-619-11	s	METAL, CHIP 47 0.5% 1/10W
R456	1-208-784-11	s	METAL, CHIP 1.2k 0.5% 1/10W
R457	1-208-806-11	s	METAL, CHIP 10k 0.5% 1/10W
R458	1-216-611-11	s	METAL, CHIP 22 0.5% 1/10W
R460	1-216-699-11	s	METAL, CHIP 100k 0.5% 1/10W
R461	1-208-806-11	s	METAL, CHIP 10k 0.5% 1/10W
R462	1-208-806-11	s	METAL, CHIP 10k 0.5% 1/10W
R463	1-216-671-11	s	METAL, CHIP 6.8k 0.5% 1/10W
R464	1-216-663-11	s	METAL, CHIP 3.3k 0.5% 1/10W
R465	1-216-663-11	s	METAL, CHIP 3.3k 0.5% 1/10W
R466	1-216-295-91	s	RES, CHIP 0
R467	1-216-295-91	s	RES, CHIP 0
R500	1-208-806-11	s	METAL, CHIP 10k 0.5% 1/10W
R501	1-249-675-11	s	CARBON 1.2k [illegible] 1/2W
R502	1-249-675-11	■	CARBON 1.2k 5% 1/2W
R503	1-216-619-11	s	METAL, CHIP 47 0.5% 1/10W
R504	1-208-784-11	s	METAL, CHIP 1.2k 0.5% 1/10W
R505	1-216-659-11	s	METAL, CHIP 2.2k 0.5% 1/10W
R506	1-208-806-11	■	METAL, CHIP 10k 0.5% 1/10W
R507	1-208-806-11	■	METAL, CHIP 10k 0.5% 1/10W
R508	1-208-806-11	■	METAL, CHIP 10k 0.5% 1/10W
R509	1-216-627-11	s	METAL, CHIP 100 0.5% 1/10W
R510	1-216-627-11	s	METAL, CHIP 100 0.5% 1/10W
R511	1-208-806-11	■	METAL, CHIP 10k 0.5% 1/10W

(AU-217 BOARD(ES-7(UC/J/CE)))

Ref. No. or Q'ty	Part No.	SP	Description
R512	1-216-619-11	■	METAL, CHIP 47 0.5% 1/10W
R513	1-208-806-11	s	METAL, CHIP 10k 0.5% 1/10W
R514	1-208-806-11	s	METAL, CHIP 10k 0.5% 1/10W
R515	1-208-806-11	s	METAL, CHIP 10k 0.5% 1/10W
R516	1-216-619-11	s	METAL, CHIP 47 0.5% 1/10W
R517	1-216-667-11	s	METAL, CHIP 4.7k 0.5% 1/10W
R518	1-216-699-11	s	METAL, CHIP 100k 0.5% 1/10W
R519	1-208-784-11	s	METAL, CHIP 1.2k 0.5% 1/10W
R520	1-216-699-11	s	METAL, CHIP 100k 0.5% 1/10W
R521	1-208-806-11	■	METAL, CHIP 10k 0.5% 1/10W
R522	1-208-806-11	s	METAL, CHIP 10k 0.5% 1/10W
R523	1-216-699-11	s	METAL, CHIP 100k 0.5% 1/10W
R524	1-216-667-11	s	METAL, CHIP 4.7k 0.5% 1/10W
R525	1-208-806-11	s	METAL, CHIP 10k 0.5% 1/10W
R526	1-216-699-11	s	METAL, CHIP 100k 0.5% 1/10W
R527	1-208-806-11	s	METAL, CHIP 10k 0.5% 1/10W
R528	1-208-806-11	■	METAL, CHIP 10k 0.5% 1/10W
R529	1-216-667-11	s	METAL, CHIP 4.7k 0.5% 1/10W
R530	1-216-699-11	s	METAL, CHIP 100k 0.5% 1/10W
R531	1-208-806-11	s	METAL, CHIP 10k 0.5% 1/10W
R532	1-216-667-11	■	METAL, CHIP 4.7k 0.5% 1/10W
R533	1-216-699-11	s	METAL, CHIP 100k 0.5% 1/10W
R534	1-208-806-11	s	METAL, CHIP 10k 0.5% 1/10W
R535	1-216-657-11	s	METAL, CHIP 1.8k 0.5% 1/10W
R536	1-216-699-11	s	METAL, CHIP 100k 0.5% 1/10W
R537	1-208-806-11	s	METAL, CHIP 10k 0.5% 1/10W
R538	1-249-675-11	s	CARBON 1.2k 5% 1/2W
R539	1-249-675-11	s	CARBON 1.2k 5% 1/2W
R540	1-216-619-11	s	METAL, CHIP 47 0.5% 1/10W
R541	1-208-784-11	s	METAL, CHIP 1.2k 0.5% 1/10W
R542	1-216-659-11	s	METAL, CHIP 2.2k 0.5% 1/10W
R543	1-216-611-11	s	METAL, CHIP 22 0.5% 1/10W
R544	1-208-806-11	s	METAL, CHIP 10k 0.5% 1/10W
R545	1-208-806-11	s	METAL, CHIP 10k 0.5% 1/10W
R546	1-208-806-11	■	METAL, CHIP 10k 0.5% 1/10W
R547	1-216-627-11	s	METAL, CHIP 100 0.5% 1/10W
R548	1-216-627-11	s	METAL, CHIP 100 0.5% 1/10W
R549	1-216-611-11	s	METAL, CHIP 22 0.5% 1/10W
R550	1-216-619-11	s	METAL, CHIP 47 0.5% 1/10W
R551	1-208-806-11	s	METAL, CHIP 10k 0.5% 1/10W
R552	1-216-611-11	s	METAL, CHIP 22 0.5% 1/10W
R555	1-216-619-11	s	METAL, CHIP 47 0.5% 1/10W
R556	1-208-784-11	s	METAL, CHIP 1.2k 0.5% 1/10W
R557	1-208-806-11	■	METAL, CHIP 10k 0.5% 1/10W
R558	1-216-611-11	s	METAL, CHIP 22 0.5% 1/10W
R560	1-216-699-11	s	METAL, CHIP 100k 0.5% 1/10W
R561	1-208-806-11	s	METAL, CHIP 10k 0.5% 1/10W
R562	1-208-806-11	s	METAL, CHIP 10k 0.5% 1/10W
R563	1-216-671-11	s	METAL, CHIP 6.8k 0.5% 1/10W
R564	1-216-663-11	s	METAL, CHIP 3.3k 0.5% 1/10W
R565	1-216-663-11	s	METAL, CHIP 3.3k 0.5% 1/10W
R566	1-216-295-91	s	RES, CHIP 0
R567	1-216-295-91	s	RES, CHIP 0
R600	1-208-806-11	s	METAL, CHIP 10k 0.5% 1/10W
R601	1-249-675-11	s	CARBON 1.2k 5% 1/2W
R602	1-249-675-11	■	CARBON 1.2k 5% 1/2W
R603	1-216-619-11	■	METAL, CHIP 47 0.5% 1/10W
R604	1-208-784-11	s	METAL, CHIP 1.2k 0.5% 1/10W
R605	1-216-659-11	s	METAL, CHIP 2.2k 0.5% 1/10W

(AU-217 BOARD(ES-7(UC/J/CE)))

Ref. No. or Q'ty	Part No.	SP	Description
R606	1-208-806-11	s	METAL, CHIP 10k 0.5% 1/10W
R607	1-208-806-11	s	METAL, CHIP 10k 0.5% 1/10W
R608	1-208-806-11	s	METAL, CHIP 10k 0.5% 1/10W
R609	1-216-627-11	■	METAL, CHIP 100 0.5% 1/10W
R610	1-216-627-11	s	METAL, CHIP 100 0.5% 1/10W
R611	1-208-806-11	s	METAL, CHIP 10k 0.5% 1/10W
R612	1-216-619-11	s	METAL, CHIP 47 0.5% 1/10W
R613	1-208-806-11	s	METAL, CHIP 10k 0.5% 1/10W
R616	1-216-619-11	s	METAL, CHIP 47 0.5% 1/10W
R617	1-216-667-11	s	METAL, CHIP 4.7k 0.5% 1/10W
R619	1-208-784-11	s	METAL, CHIP 1.2k 0.5% 1/10W
R620	1-216-699-11	s	METAL, CHIP 100k 0.5% 1/10W
R621	1-208-806-11	■	METAL, CHIP 10k 0.5% 1/10W
R622	1-208-806-11	s	METAL, CHIP 10k 0.5% 1/10W
R623	1-216-699-11	s	METAL, CHIP 100k 0.5% 1/10W
R624	1-216-667-11	s	METAL, CHIP 4.7k 0.5% 1/10W
R625	1-208-806-11	s	METAL, CHIP 10k 0.5% 1/10W
R626	1-216-699-11	s	METAL, CHIP 100k 0.5% 1/10W
R627	1-208-806-11	s	METAL, CHIP 10k 0.5% 1/10W
R628	1-208-806-11	s	METAL, CHIP 10k 0.5% 1/10W
R629	1-216-667-11	■	METAL, CHIP 4.7k 0.5% 1/10W
R630	1-216-699-11	s	METAL, CHIP 100k 0.5% 1/10W
R631	1-208-806-11	s	METAL, CHIP 10k 0.5% 1/10W
R632	1-216-667-11	s	METAL, CHIP 4.7k 0.5% 1/10W
R633	1-216-699-11	s	METAL, CHIP 100k 0.5% 1/10W
R634	1-208-806-11	s	METAL, CHIP 10k 0.5% 1/10W
R635	1-216-657-11	s	METAL, CHIP 1.8k 0.5% 1/10W
R636	1-216-699-11	s	METAL, CHIP 100k 0.5% 1/10W
R637	1-208-806-11	s	METAL, CHIP 10k 0.5% 1/10W
R638	1-249-675-11	s	CARBON 1.2k ■ 1/2W
R639	1-249-675-11	s	CARBON 1.2k ■ 1/2W
R640	1-216-619-11	s	METAL, CHIP 47 0.5% 1/10W
R641	1-208-784-11	s	METAL, CHIP 1.2k 0.5% 1/10W
R642	1-216-659-11	s	METAL, CHIP 2.2k 0.5% 1/10W
R643	1-216-611-11	s	METAL, CHIP 22 0.5% 1/10W
R644	1-208-806-11	s	METAL, CHIP 10k 0.5% 1/10W
R645	1-208-806-11	s	METAL, CHIP 10k 0.5% 1/10W
R646	1-208-806-11	s	METAL, CHIP 10k 0.5% 1/10W
R647	1-216-627-11	s	METAL, CHIP 100 0.5% 1/10W
R648	1-216-627-11	■	METAL, CHIP 100 0.5% 1/10W
R649	1-216-611-11	s	METAL, CHIP 22 0.5% 1/10W
R650	1-216-619-11	■	METAL, CHIP 47 0.5% 1/10W
R651	1-208-806-11	s	METAL, CHIP 10k 0.5% 1/10W
R652	1-216-611-11	s	METAL, CHIP 22 0.5% 1/10W
R655	1-216-619-11	s	METAL, CHIP 47 0.5% 1/10W
R656	1-208-784-11	s	METAL, CHIP 1.2k 0.5% 1/10W
R657	1-208-806-11	s	METAL, CHIP 10k 0.5% 1/10W
R658	1-216-611-11	■	METAL, CHIP 22 0.5% 1/10W
R660	1-216-699-11	s	METAL, CHIP 100k 0.5% 1/10W
R661	1-208-806-11	s	METAL, CHIP 10k 0.5% 1/10W
R662	1-208-806-11	s	METAL, CHIP 10k 0.5% 1/10W
R663	1-216-671-11	s	METAL, CHIP 6.8k 0.5% 1/10W
R664	1-216-663-11	s	METAL, CHIP 3.3k 0.5% 1/10W
R665	1-216-663-11	s	METAL, CHIP 3.3k 0.5% 1/10W
R666	1-216-295-91	s	RES, CHIP 0
R667	1-216-295-91	s	RES, CHIP 0
R700	1-216-651-11	s	METAL, CHIP 1k 0.5% 1/10W
R701	1-208-784-11	s	METAL, CHIP 1.2k 0.5% 1/10W
R702	1-208-784-11	s	METAL, CHIP 1.2k 0.5% 1/10W

(AU-217 BOARD(ES-7(UC/J/CE)))

Ref. No. or Q'ty	Part No.	SP	Description
R703	1-216-677-11	s	METAL, CHIP 12k 0.5% 1/10W
R704	1-208-774-11	s	METAL, CHIP 470 0.5% 1/10W
R705	1-208-784-11	s	METAL, CHIP 1.2k 0.5% 1/10W
R706	1-216-663-11	s	METAL, CHIP 3.3k 0.5% 1/10W
R707	1-216-619-11	s	METAL, CHIP 47 0.5% 1/10W
R708	1-216-699-11	s	METAL, CHIP 100k 0.5% 1/10W
R709	1-216-659-11	s	METAL, CHIP 2.2k 0.5% 1/10W
R710	1-208-784-11	s	METAL, CHIP 1.2k 0.5% 1/10W
R711	1-216-659-11	■	METAL, CHIP 2.2k 0.5% 1/10W
R712	1-216-699-11	s	METAL, CHIP 100k 0.5% 1/10W
R713	1-208-784-11	s	METAL, CHIP 1.2k 0.5% 1/10W
R714	1-216-619-11	■	METAL, CHIP 47 0.5% 1/10W
R715	1-216-651-11	s	METAL, CHIP 1k 0.5% 1/10W
R716	1-208-784-11	s	METAL, CHIP 1.2k 0.5% 1/10W
R717	1-208-784-11	■	METAL, CHIP 1.2k 0.5% 1/10W
R718	1-216-677-11	s	METAL, CHIP 12k 0.5% 1/10W
R719	1-208-774-11	s	METAL, CHIP 470 0.5% 1/10W
R720	1-208-784-11	s	METAL, CHIP 1.2k 0.5% 1/10W
R721	1-216-663-11	s	METAL, CHIP 3.3k 0.5% 1/10W
R722	1-216-619-11	s	METAL, CHIP 47 0.5% 1/10W
R723	1-216-699-11	s	METAL, CHIP 100k 0.5% 1/10W
R724	1-216-659-11	s	METAL, CHIP 2.2k 0.5% 1/10W
R725	1-208-784-11	s	METAL, CHIP 1.2k 0.5% 1/10W
R726	1-216-659-11	s	METAL, CHIP 2.2k 0.5% 1/10W
R727	1-216-699-11	s	METAL, CHIP 100k 0.5% 1/10W
R728	1-208-784-11	s	METAL, CHIP 1.2k 0.5% 1/10W
R729	1-216-619-11	s	METAL, CHIP 47 0.5% 1/10W
R730	1-216-651-11	■	METAL, CHIP 1k 0.5% 1/10W
R731	1-208-806-11	s	METAL, CHIP 10k 0.5% 1/10W
R732	1-208-784-11	s	METAL, CHIP 1.2k 0.5% 1/10W
R733	1-216-651-11	s	METAL, CHIP 1k 0.5% 1/10W
R734	1-208-784-11	■	METAL, CHIP 1.2k 0.5% 1/10W
R735	1-216-677-11	■	METAL, CHIP 12k 0.5% 1/10W
R736	1-208-774-11	■	METAL, CHIP 470 0.5% 1/10W
R737	1-208-784-11	s	METAL, CHIP 1.2k 0.5% 1/10W
R738	1-216-663-11	■	METAL, CHIP 3.3k 0.5% 1/10W
R739	1-216-619-11	■	METAL, CHIP 47 0.5% 1/10W
R740	1-216-699-11	■	METAL, CHIP 100k 0.5% 1/10W
R741	1-216-659-11	s	METAL, CHIP 2.2k 0.5% 1/10W
R742	1-208-784-11	s	METAL, CHIP 1.2k 0.5% 1/10W
R743	1-216-659-11	s	METAL, CHIP 2.2k 0.5% 1/10W
R744	1-216-699-11	s	METAL, CHIP 100k 0.5% 1/10W
R745	1-208-784-11	s	METAL, CHIP 1.2k 0.5% 1/10W
R746	1-216-619-11	s	METAL, CHIP 47 0.5% 1/10W
R747	1-216-651-11	s	METAL, CHIP 1k 0.5% 1/10W
R748	1-208-784-11	s	METAL, CHIP 1.2k 0.5% 1/10W
R749	1-208-784-11	s	METAL, CHIP 1.2k 0.5% 1/10W
R750	1-216-677-11	s	METAL, CHIP 12k 0.5% 1/10W
R751	1-208-774-11	s	METAL, CHIP 470 0.5% 1/10W
R752	1-208-784-11	s	METAL, CHIP 1.2k 0.5% 1/10W
R753	1-216-663-11	s	METAL, CHIP 3.3k 0.5% 1/10W
R754	1-216-619-11	s	METAL, CHIP 47 0.5% 1/10W
R755	1-216-699-11	s	METAL, CHIP 100k 0.5% 1/10W
R756	1-216-659-11	s	METAL, CHIP 2.2k 0.5% 1/10W
R757	1-208-784-11	s	METAL, CHIP 1.2k 0.5% 1/10W
R758	1-216-659-11	s	METAL, CHIP 2.2k 0.5% 1/10W
R759	1-216-699-11	s	METAL, CHIP 100k 0.5% 1/10W
R760	1-208-784-11	s	METAL, CHIP 1.2k 0.5% 1/10W
R761	1-216-619-11	s	METAL, CHIP 47 0.5% 1/10W

(AU-217 BOARD(ES-7(UC/J/CE)))

Ref. No. or Q'ty	Part No.	SP	Description
R762	1-216-667-11	s	METAL, CHIP 4.7k 0.5% 1/10W
R763	1-208-784-11	s	METAL, CHIP 1.2k 0.5% 1/10W
R764	1-216-667-11	s	METAL, CHIP 4.7k 0.5% 1/10W
R765	1-208-784-11	s	METAL, CHIP 1.2k 0.5% 1/10W
R766	1-216-667-11	■	METAL, CHIP 4.7k 0.5% 1/10W
R767	1-208-784-11	s	METAL, CHIP 1.2k 0.5% 1/10W
R768	1-216-667-11	s	METAL, CHIP 4.7k 0.5% 1/10W
R769-773	1-208-784-11	s	METAL, CHIP 1.2k 0.5% 1/10W
R800	1-208-806-11	s	METAL, CHIP 10k 0.5% 1/10W
R801	1-208-806-11	■	METAL, CHIP 10k 0.5% 1/10W
R802	1-208-784-11	s	METAL, CHIP 1.2k 0.5% 1/10W
R803	1-208-784-11	s	METAL, CHIP 1.2k 0.5% 1/10W
R804	1-208-806-11	s	METAL, CHIP 10k 0.5% 1/10W
R805	1-208-806-11	s	METAL, CHIP 10k 0.5% 1/10W
R806	1-216-651-11	s	METAL, CHIP 1k 0.5% 1/10W
R807	1-208-806-11	■	METAL, CHIP 10k 0.5% 1/10W
R808	1-208-806-11	■	METAL, CHIP 10k 0.5% 1/10W
R809	1-208-806-11	s	METAL, CHIP 10k 0.5% 1/10W
R810	1-216-651-11	s	METAL, CHIP 1k 0.5% 1/10W
R811	1-216-651-11	s	METAL, CHIP 1k 0.5% 1/10W
R812	1-208-806-11	s	METAL, CHIP 10k 0.5% 1/10W
R813	1-208-806-11	■	METAL, CHIP 10k 0.5% 1/10W
R814	1-208-806-11	s	METAL, CHIP 10k 0.5% 1/10W
R815	1-208-806-11	s	METAL, CHIP 10k 0.5% 1/10W
R816	1-208-784-11	s	METAL, CHIP 1.2k 0.5% 1/10W
R817	1-208-784-11	■	METAL, CHIP 1.2k 0.5% 1/10W
R818	1-208-806-11	s	METAL, CHIP 10k 0.5% 1/10W
R819	1-208-806-11	s	METAL, CHIP 10k 0.5% 1/10W
R820	1-216-651-11	s	METAL, CHIP 1k 0.5% 1/10W
R821	1-208-806-11	s	METAL, CHIP 10k 0.5% 1/10W
R822	1-208-806-11	s	METAL, CHIP 10k 0.5% 1/10W
R823	1-208-806-11	s	METAL, CHIP 10k 0.5% 1/10W
R824	1-216-651-11	s	METAL, CHIP 1k 0.5% 1/10W
R825	1-208-806-11	s	METAL, CHIP 10k 0.5% 1/10W
R826	1-216-651-11	s	METAL, CHIP 1k 0.5% 1/10W
R827	1-208-806-11	■	METAL, CHIP 10k 0.5% 1/10W
R828	1-208-806-11	s	METAL, CHIP 10k 0.5% 1/10W
R829	1-208-806-11	s	METAL, CHIP 10k 0.5% 1/10W
R830	1-208-784-11	s	METAL, CHIP 1.2k 0.5% 1/10W
R831	1-208-784-11	■	METAL, CHIP 1.2k 0.5% 1/10W
R832	1-208-806-11	s	METAL, CHIP 10k 0.5% 1/10W
R833	1-208-806-11	s	METAL, CHIP 10k 0.5% 1/10W
R834	1-216-651-11	s	METAL, CHIP 1k 0.5% 1/10W
R835	1-208-806-11	s	METAL, CHIP 10k 0.5% 1/10W
R836	1-208-806-11	s	METAL, CHIP 10k 0.5% 1/10W
R837	1-208-806-11	s	METAL, CHIP 10k 0.5% 1/10W
R838	1-216-651-11	s	METAL, CHIP 1k 0.5% 1/10W
R839-843	1-208-806-11	s	METAL, CHIP 10k 0.5% 1/10W
R844	1-208-784-11	■	METAL, CHIP 1.2k 0.5% 1/10W
R845	1-208-784-11	■	METAL, CHIP 1.2k 0.5% 1/10W
R846	1-208-806-11	s	METAL, CHIP 10k 0.5% 1/10W
R847	1-208-806-11	s	METAL, CHIP 10k 0.5% 1/10W
R848	1-216-651-11	s	METAL, CHIP 1k 0.5% 1/10W
R849	1-208-806-11	s	METAL, CHIP 10k 0.5% 1/10W
R850	1-208-806-11	s	METAL, CHIP 10k 0.5% 1/10W
R851	1-208-806-11	s	METAL, CHIP 10k 0.5% 1/10W
R852	1-216-627-11	s	METAL, CHIP 100 0.5% 1/10W
R853	1-216-659-11	s	METAL, CHIP 2.2k 0.5% 1/10W
R854	1-208-806-11	s	METAL, CHIP 10k 0.5% 1/10W

(AU-217 BOARD(ES-7(UC/J/CE)))

Ref. No. or Q'ty	Part No.	SP	Description
R855	1-216-651-11	s	METAL, CHIP 1k 0.5% 1/10W
R856	1-216-651-11	s	METAL, CHIP 1k 0.5% 1/10W
R857	1-208-806-11	s	METAL, CHIP 10k 0.5% 1/10W
R858	1-208-806-11	s	METAL, CHIP 10k 0.5% 1/10W
R859	1-216-627-11	■	METAL, CHIP 100 0.5% 1/10W
R860	1-216-659-11	s	METAL, CHIP 2.2k 0.5% 1/10W
R861	1-208-806-11	s	METAL, CHIP 10k 0.5% 1/10W
R862	1-216-627-11	s	METAL, CHIP 100 0.5% 1/10W
R863	1-216-627-11	s	METAL, CHIP 100 0.5% 1/10W
R864	1-216-667-11	s	METAL, CHIP 4.7k 0.5% 1/10W
R865	1-208-806-11	s	METAL, CHIP 10k 0.5% 1/10W
R866	1-216-651-11	s	METAL, CHIP 1k 0.5% 1/10W
R867	1-216-651-11	s	METAL, CHIP 1k 0.5% 1/10W
R868	1-208-806-11	■	METAL, CHIP 10k 0.5% 1/10W
R869	1-216-651-11	s	METAL, CHIP 1k 0.5% 1/10W
R870	1-208-806-11	■	METAL, CHIP 10k 0.5% 1/10W
R871	1-208-806-11	s	METAL, CHIP 10k 0.5% 1/10W
R904	1-216-631-11	s	METAL, CHIP 150 0.5% 1/10W
R907-915	1-216-611-11	s	METAL, CHIP 22 0.5% 1/10W
R1001-1005	1-247-855-11	s	CARBON 10k 5% 1/4W
RB1	1-239-306-11	s	RESISTOR BLOCK, CHIP 10kx8
RB2	1-239-306-11	s	RESISTOR BLOCK, CHIP 10kx8
RB3	1-239-189-11	s	RESISTOR BLOCK 22x8
RB4	1-239-305-11	s	RESISTOR BLOCK, CHIP 4.7kx8
RV200	1-237-518-21	s	RES, ADJ, METAL 10k
RV201	1-237-518-21	s	RES, ADJ, METAL 10k
RV300	1-237-518-21	s	RES, ADJ, METAL 10k
RV301	1-237-518-21	s	RES, ADJ, METAL 10k
RV400	1-237-518-21	s	RES, ADJ, METAL 10k
RV401	1-237-518-21	s	RES, ADJ, METAL 10k
RV500	1-237-518-21	s	RES, ADJ, METAL 10k
RV501	1-237-518-21	s	RES, ADJ, METAL 10k
RV600	1-237-518-21	s	RES, ADJ, METAL 10k
RV601	1-237-518-21	s	RES, ADJ, METAL 10k
RV700	1-237-518-21	s	RES, ADJ, METAL 10k
RV701	1-237-518-21	s	RES, ADJ, METAL 10k
RV702	1-237-518-21	s	RES, ADJ, METAL 10k
RV703	1-237-518-21	■	RES, ADJ, METAL 10k
RV800	1-237-518-21	s	RES, ADJ, METAL 10k
RV801	1-237-518-21	s	RES, ADJ, METAL 10k
RV802	1-237-518-21	s	RES, ADJ, METAL 10k
RV803	1-237-518-21	s	RES, ADJ, METAL 10k
RY700	1-515-716-11	s	RELAY
RY701	1-515-716-11	s	RELAY
RY702	1-515-716-11	s	RELAY
RY703	1-515-716-11	s	RELAY
RY800	1-515-716-11	s	RELAY
SW1	1-570-204-11	■	SWITCH, PUSH
X1	1-577-258-11	s	OSCILLATOR, CRYSTAL 32.00MHz
X2	1-567-698-11	s	CRYSTAL 24.576MHz
X3	1-577-170-11	s	OSCILLATOR, CRYSTAL 50.00MHz

BF-54 BOARD(ES-7(UC/J/CE))

Ref. No. or Q'ty	Part No.	SP	Description
1pc	A-8273-916-A	o	MOUNTED CIRCUIT BOARD, BF-54
3pcs	1-562-579-11	s	PLUG, SHORTING 2P
2pcs	7-685-871-01	s	SCREW +BVTT 3x6 (S)
C1-6	1-164-159-21	s	CERAMIC 0.1uF 50V
C7	1-126-786-11	■	ELECT 47uF 20% 16V
CN1	1-566-343-11	o	CONNECTOR, 40P, MALE
FL1-28	1-236-058-21	s	FILTER, NOISE
IC1	8-759-357-15	s	IC SN74ALS244CN
IC2	8-759-357-15	s	IC SN74ALS244CN
IC3	8-759-912-21	s	IC SN74ALS245AN
IC4	8-759-347-37	s	IC SN74ALS138AN
IC5	8-759-904-18	s	IC SN74ALS00AN
IC6	8-759-914-03	s	IC SN74LS06N
JP1	1-691-506-11	s	CONNECTOR 10P, MALE
JP2	1-691-506-11	s	CONNECTOR 10P, MALE
JP3	1-564-952-21	s	PIN, DIL 16P
R1	1-247-843-11	■	CARBON 3.3k 5% 1/4W
R2	1-249-427-11	s	CARBON 6.8k 5% 1/4W
R3	1-247-843-11	■	CARBON 3.3k 5% 1/4W
R4	1-249-427-11	s	CARBON 6.8k 5% 1/4W
R5	1-247-843-11	s	CARBON 3.3k 5% 1/4W
R6	1-249-427-11	s	CARBON 6.8k 5% 1/4W
R7	1-249-399-11	s	CARBON 33 5% 1/4W
R8	1-249-399-11	s	CARBON 33 5% 1/4W
R9	1-247-843-11	s	CARBON 3.3k 5% 1/4W
R10-31	1-249-399-11	s	CARBON 33 5% 1/4W
R34	1-247-843-11	s	CARBON 3.3k 5% 1/4W
R35	1-247-843-11	■	CARBON 3.3k 5% 1/4W
R36	1-247-843-11	s	CARBON 3.3k ■ 1/4W
R37	1-247-843-11	s	CARBON 3.3k 5% 1/4W

CN-1237 BOARD(ES-7(UC/J/CE))

Ref. No. or Q'ty	Part No.	SP	Description
Refer to the service manual of the ES-7.			

CN-1238 BOARD(ES-7(UC/J/CE))

Ref. No. or Q'ty	Part No.	SP	Description
Refer to the service manual of the ES-7.			

CN-1242 BOARD(ES-7(UC/J/CE))

Ref. No. or Q'ty	Part No.	SP	Description
Refer to the service manual of the ES-7.			

DA-95 BOARD(ES-7(UC/J))

Ref. No. or Q'ty	Part No.	SP	Description
1pc	A-8273-936-A	o	MOUNTED CIRCUIT BOARD, DA-95
1pc	1-163-038-91	s	CERAMIC, CHIP 0.1uF 25V
1pc	3-172-089-01	o	HANDLE
1pc	7-621-770-87	■	SCREW +B 2.6x5
1pc	7-682-546-04	s	SCREW +B 3x5
1pc	7-682-947-01	■	SCREW +PSW 3x6
1pc	7-682-948-01	s	SCREW +PSW 3x8
1pc	7-685-145-11	s	SCREW +P 3x6 TYPE2 NON-SLIT
5pcs	3-146-822-21	o	SPACER
5pcs	7-682-545-04	■	SCREW +B 3x4
1pc	7-621-773-87	s	SCREW +B 2.6x10
1pc	7-622-207-05	s	N 2.6, TYPE 2
C100	1-163-038-91	s	CERAMIC, CHIP 0.1uF 25V
C101	1-124-589-11	s	ELECT 47uF 20% 16V
C102	1-124-589-11	s	ELECT 47uF 20% 16V
C103	1-124-234-00	s	ELECT 22uF 20% 16V
C104	1-163-038-91	s	CERAMIC, CHIP 0.1uF 25V
C105	1-163-038-91	s	CERAMIC, CHIP 0.1uF 25V
C106	1-124-234-00	s	ELECT 22uF 20% 16V
C107	1-163-251-11	s	CERAMIC, CHIP 100pF ■ 50V
C108	1-163-251-11	s	CERAMIC, CHIP 100pF 5% 50V
C109	1-163-038-91	■	CERAMIC, CHIP 0.1uF 25V
C110	1-163-038-91	■	CERAMIC, CHIP 0.1uF 25V
C111	1-163-231-11	■	CERAMIC, CHIP 15pF 5% 50V
C112	1-163-038-91	s	CERAMIC, CHIP 0.1uF 25V
C113	1-163-038-91	s	CERAMIC, CHIP 0.1uF 25V
C114	1-164-232-11	s	CERAMIC, CHIP 0.01uF 10% 100V
C115	1-124-261-00	s	ELECT 10uF 20% 50V
C116	1-163-038-91	s	CERAMIC, CHIP 0.1uF 25V
C117	1-124-589-11	s	ELECT 47uF 20% 16V
C118	1-163-038-91	s	CERAMIC, CHIP 0.1uF 25V
C119	1-126-163-11	s	ELECT 4.7uF 20% 50V
C120	1-163-038-91	s	CERAMIC, CHIP 0.1uF 25V
C121	1-164-232-11	s	CERAMIC, CHIP 0.01uF 10% 100V
C122	1-124-261-00	s	ELECT 10uF 20% 50V
C123	1-124-234-00	s	ELECT 22uF 20% 16V
C124	1-163-038-91	s	CERAMIC, CHIP 0.1uF 25V
C125	1-163-038-91	s	CERAMIC, CHIP 0.1uF 25V
C126	1-163-038-91	s	CERAMIC, CHIP 0.1uF 25V
C127	1-126-163-11	s	ELECT 4.7uF 20% 50V
C128	1-163-037-11	s	CERAMIC, CHIP 0.022uF 10% 25V
C129	1-163-125-00	s	CERAMIC, CHIP 220pF 5% 50V
C130	1-163-038-91	s	CERAMIC, CHIP 0.1uF 25V
C131	1-126-163-11	s	ELECT 4.7uF 20% 50V
C132	1-163-038-91	s	CERAMIC, CHIP 0.1uF 25V
C133	1-163-038-91	s	CERAMIC, CHIP 0.1uF 25V
C134	1-124-589-11	s	ELECT 47uF 20% 16V
C135	1-163-038-91	s	CERAMIC, CHIP 0.1uF 25V
C136	1-164-232-11	s	CERAMIC, CHIP 0.01uF 10% 100V
C137	1-163-038-91	s	CERAMIC, CHIP 0.1uF 25V
C138	1-126-163-11	s	ELECT 4.7uF 20% 50V
C139	1-163-038-91	■	CERAMIC, CHIP 0.1uF 25V
C140	1-126-163-11	s	ELECT 4.7uF 20% 50V
C141	1-107-714-11	s	ELECT 10uF 20% 16V
C142	1-163-038-91	s	CERAMIC, CHIP 0.1uF 25V
C143	1-124-261-00	s	ELECT 10uF 20% 50V
C144	1-163-235-11	■	CERAMIC, CHIP 22pF 5% 50V
C145	1-163-038-91	■	CERAMIC, CHIP 0.1uF 25V

(DA-95 BOARD(ES-7(UC/J)))

Ref. No. or Q'ty	Part No.	SP	Description
C146	1-126-160-11	s	ELECT 1uF 20% 50V
C147	1-163-275-11	s	CERAMIC, CHIP 0.001uF 5% 50V
C148	1-124-261-00	s	ELECT 10uF 20% 50V
C149	1-124-261-00	■	ELECT 10uF 20% 50V
C150	1-163-038-91	s	CERAMIC, CHIP 0.1uF 25V
C151	1-163-038-91	s	CERAMIC, CHIP 0.1uF 25V
C152	1-124-589-11	s	ELECT 47uF 20% 16V
C153	1-163-038-91	s	CERAMIC, CHIP 0.1uF 25V
C154	1-124-589-11	s	ELECT 47uF 20% 16V
C155	1-163-037-11	s	CERAMIC, CHIP 0.022uF 10% 25V
C156	1-163-037-11	s	CERAMIC, CHIP 0.022uF 10% 25V
C157	1-163-038-91	s	CERAMIC, CHIP 0.1uF 25V
C158	1-124-589-11	s	ELECT 47uF 20% 16V
C159	1-163-038-91	s	CERAMIC, CHIP 0.1uF 25V
C160	1-163-243-11	s	CERAMIC, CHIP 47pF 5% 50V
C161	1-163-038-91	s	CERAMIC, CHIP 0.1uF 25V
C162	1-163-038-91	s	CERAMIC, CHIP 0.1uF 25V
C163	1-163-038-91	s	CERAMIC, CHIP 0.1uF 25V
C164	1-124-589-11	s	ELECT 47uF 20% 16V
C165	1-163-038-91	s	CERAMIC, CHIP 0.1uF 25V
C166	1-163-243-11	■	CERAMIC, CHIP 47pF 5% 50V
C167	1-163-038-91	s	CERAMIC, CHIP 0.1uF 25V
C168	1-163-038-91	s	CERAMIC, CHIP 0.1uF 25V
C169	1-163-251-11	■	CERAMIC, CHIP 100pF 5% 50V
C170	1-163-251-11	■	CERAMIC, CHIP 100pF 5% 50V
C171	1-163-227-11	s	CERAMIC, CHIP 10pF ■ 50V
C172	1-163-263-11	s	CERAMIC, CHIP 330pF 5% 50V
C173	1-163-227-11	s	CERAMIC, CHIP 10pF 5% 50V
C174	1-163-231-11	■	CERAMIC, CHIP 15pF 5% 50V
C175	1-163-227-11	s	CERAMIC, CHIP 10pF 5% 50V
C177	1-163-251-11	■	CERAMIC, CHIP 100pF 5% 50V
C178	1-163-220-11	s	CERAMIC, CHIP 3pF 50V
C179	1-126-163-11	s	ELECT 4.7uF 20% 50V
C180	1-163-037-11	s	CERAMIC, CHIP 0.022uF 10% 25V
C181	1-163-037-11	s	CERAMIC, CHIP 0.022uF 10% 25V
C182	1-163-251-11	s	CERAMIC, CHIP 100pF 5% 50V
C183	1-163-038-91	s	CERAMIC, CHIP 0.1uF 25V
C184	1-163-235-11	s	CERAMIC, CHIP 22pF 5% 50V
C185	1-163-275-11	■	CERAMIC, CHIP 0.001uF 5% 50V
C186	1-163-038-91	s	CERAMIC, CHIP 0.1uF 25V
C187	1-163-251-11	s	CERAMIC, CHIP 100pF 5% 50V
C188	1-163-038-91	s	CERAMIC, CHIP 0.1uF 25V
C189	1-124-234-00	s	ELECT 22uF 20% 16V
C190	1-163-038-91	s	CERAMIC, CHIP 0.1uF 25V
C191	1-163-038-91	s	CERAMIC, CHIP 0.1uF 25V
C192	1-124-234-00	s	ELECT 22uF 20% 16V
C193	1-163-038-91	s	CERAMIC, CHIP 0.1uF 25V
C194	1-163-038-91	s	CERAMIC, CHIP 0.1uF 25V
C195	1-164-232-11	s	CERAMIC, CHIP 0.01uF 10% 100V
C196	1-124-234-00	s	ELECT 22uF 20% 16V
C197	1-163-275-11	■	CERAMIC, CHIP 0.001uF 5% 50V
C198	1-163-038-91	s	CERAMIC, CHIP 0.1uF 25V
C199	1-163-037-11	s	CERAMIC, CHIP 0.022uF 10% 25V
C200	1-163-037-11	s	CERAMIC, CHIP 0.022uF 10% 25V
C201	1-126-163-11	s	ELECT 4.7uF 20% 50V
C202	1-163-037-11	■	CERAMIC, CHIP 0.022uF 10% 25V
C203	1-163-038-91	s	CERAMIC, CHIP 0.1uF 25V
C204	1-163-038-91	s	CERAMIC, CHIP 0.1uF 25V
C205	1-163-038-91	s	CERAMIC, CHIP 0.1uF 25V

(DA-95 BOARD(ES-7(UC/J)))

Ref. No. or Q'ty	Part No.	SP	Description
C206	1-163-037-11	s	CERAMIC, CHIP 0.022uF 10% 25V
C207	1-126-163-11	s	ELECT 4.7uF 20% 50V
C208	1-163-037-11	s	CERAMIC, CHIP 0.022uF 10% 25V
C209	1-163-038-91	■	CERAMIC, CHIP 0.1uF 25V
C210	1-163-038-91	■	CERAMIC, CHIP 0.1uF 25V
C211	1-163-038-91	s	CERAMIC, CHIP 0.1uF 25V
C212	1-163-037-11	■	CERAMIC, CHIP 0.022uF 10% 25V
C213-218	1-163-038-91	s	CERAMIC, CHIP 0.1uF 25V
C219	1-163-037-11	s	CERAMIC, CHIP 0.022uF 10% 25V
C220	1-163-037-11	s	CERAMIC, CHIP 0.022uF 10% 25V
C221	1-126-163-11	s	ELECT 4.7uF 20% 50V
C222	1-163-037-11	s	CERAMIC, CHIP 0.022uF 10% 25V
C223	1-163-038-91	s	CERAMIC, CHIP 0.1uF 25V
C224	1-124-589-11	s	ELECT 47uF 20% 16V
C225	1-163-038-91	s	CERAMIC, CHIP 0.1uF 25V
C226	1-163-038-91	■	CERAMIC, CHIP 0.1uF 25V
C227	1-163-038-91	■	CERAMIC, CHIP 0.1uF 25V
C228	1-164-232-11	■	CERAMIC, CHIP 0.01uF 10% 100V
C229	1-164-232-11	s	CERAMIC, CHIP 0.01uF 10% 100V
C230-239	1-163-038-91	s	CERAMIC, CHIP 0.1uF 25V
C300-311	1-163-038-91	s	CERAMIC, CHIP 0.1uF 25V
C312	1-163-251-11	s	CERAMIC, CHIP 100pF ■■ 50V
C313	1-163-251-11	■	CERAMIC, CHIP 100pF 5% 50V
C314	1-163-038-91	s	CERAMIC, CHIP 0.1uF 25V
C315	1-124-589-11	■	ELECT 47uF 20% 16V
C316	1-163-038-91	s	CERAMIC, CHIP 0.1uF 25V
C317	1-124-589-11	s	ELECT 47uF 20% 16V
C318	1-163-038-91	s	CERAMIC, CHIP 0.1uF 25V
C319	1-163-038-91	s	CERAMIC, CHIP 0.1uF 25V
C320	1-124-589-11	s	ELECT 47uF 20% 16V
C321-325	1-163-038-91	s	CERAMIC, CHIP 0.1uF 25V
C326	1-163-241-11	s	CERAMIC, CHIP 39pF 5% 50V
C327	1-163-038-91	■	CERAMIC, CHIP 0.1uF 25V
C328	1-163-243-11	s	CERAMIC, CHIP 47pF 5% 50V
C329	1-163-235-11	■	CERAMIC, CHIP 22pF 5% 50V
C330	1-163-038-91	s	CERAMIC, CHIP 0.1uF 25V
C331	1-124-261-00	s	ELECT 10uF 20% 50V
C332	1-163-038-91	s	CERAMIC, CHIP 0.1uF 25V
C333	1-163-038-91	■	CERAMIC, CHIP 0.1uF 25V
C334	1-163-038-91	s	CERAMIC, CHIP 0.1uF 25V
C335	1-163-038-91	s	CERAMIC, CHIP 0.1uF 25V
C336	1-124-589-11	s	ELECT 47uF 20% 16V
C337	1-124-589-11	s	ELECT 47uF 20% 16V
C338	1-163-038-91	s	CERAMIC, CHIP 0.1uF 25V
C339	1-163-038-91	s	CERAMIC, CHIP 0.1uF 25V
C340	1-163-038-91	s	CERAMIC, CHIP 0.1uF 25V
C341	1-163-038-91	s	CERAMIC, CHIP 0.1uF 25V
C342	1-163-239-11	s	CERAMIC, CHIP 33pF 5% 50V
C343	1-163-243-11	s	CERAMIC, CHIP 47pF 5% 50V
C344	1-163-243-11	s	CERAMIC, CHIP 47pF ■■ 50V
C345	1-163-038-91	s	CERAMIC, CHIP 0.1uF 25V
C346	1-163-038-91	s	CERAMIC, CHIP 0.1uF 25V
C347	1-163-235-11	s	CERAMIC, CHIP 22pF 5% 50V
C348	1-163-235-11	s	CERAMIC, CHIP 22pF 5% 50V
C349	1-163-038-91	s	CERAMIC, CHIP 0.1uF 25V
C350	1-124-261-00	■	ELECT 10uF 20% 50V
C351	1-163-038-91	s	CERAMIC, CHIP 0.1uF 25V
C352	1-163-038-91	s	CERAMIC, CHIP 0.1uF 25V
C353	1-163-038-91	s	CERAMIC, CHIP 0.1uF 25V

(DA-95 BOARD(ES-7(UC/J)))

Ref. No. or Q'ty	Part No.	SP	Description
C354	1-163-038-91	s	CERAMIC, CHIP 0.1uF 25V
C355	1-124-589-11	s	ELECT 47uF 20% 16V
C356	1-124-589-11	s	ELECT 47uF 20% 16V
C357	1-163-038-91	s	CERAMIC, CHIP 0.1uF 25V
C358	1-163-038-91	■	CERAMIC, CHIP 0.1uF 25V
C359	1-163-038-91	s	CERAMIC, CHIP 0.1uF 25V
C360	1-163-038-91	s	CERAMIC, CHIP 0.1uF 25V
C361	1-124-589-11	s	ELECT 47uF 20% 16V
C362	1-163-239-11	■	CERAMIC, CHIP 33pF 5% 50V
C363	1-163-243-11	s	CERAMIC, CHIP 47pF 5% 50V
C364	1-163-243-11	s	CERAMIC, CHIP 47pF 5% 50V
C365	1-163-038-91	s	CERAMIC, CHIP 0.1uF 25V
C366	1-163-038-91	s	CERAMIC, CHIP 0.1uF 25V
C367	1-163-235-11	■	CERAMIC, CHIP 22pF 5% 50V
C368	1-163-235-11	s	CERAMIC, CHIP 22pF 5% 50V
C369	1-163-038-91	s	CERAMIC, CHIP 0.1uF 25V
C370	1-124-261-00	s	ELECT 10uF 20% 50V
C371	1-163-038-91	■	CERAMIC, CHIP 0.1uF 25V
C372	1-163-038-91	s	CERAMIC, CHIP 0.1uF 25V
C373	1-163-038-91	s	CERAMIC, CHIP 0.1uF 25V
C374	1-163-038-91	■	CERAMIC, CHIP 0.1uF 25V
C375	1-124-589-11	s	ELECT 47uF 20% 16V
C376	1-124-589-11	s	ELECT 47uF 20% 16V
C377	1-163-038-91	s	CERAMIC, CHIP 0.1uF 25V
C378	1-163-038-91	s	CERAMIC, CHIP 0.1uF 25V
C379	1-163-038-91	s	CERAMIC, CHIP 0.1uF 25V
C380	1-163-125-00	s	CERAMIC, CHIP 220pF 5% 50V
C381	1-163-038-91	s	CERAMIC, CHIP 0.1uF 25V
C382	1-163-038-91	s	CERAMIC, CHIP 0.1uF 25V
C383	1-163-038-91	s	CERAMIC, CHIP 0.1uF 25V
C386	1-163-038-91	s	CERAMIC, CHIP 0.1uF 25V
C400	1-163-038-91	s	CERAMIC, CHIP 0.1uF 25V
C401	1-163-038-91	■	CERAMIC, CHIP 0.1uF 25V
C402	1-124-589-11	s	ELECT 47uF 20% 16V
C403	1-124-589-11	s	ELECT 47uF 20% 16V
C404-409	1-163-038-91	■	CERAMIC, CHIP 0.1uF 25V
C410	1-163-133-00	s	CERAMIC, CHIP 470pF 5% 50V
C411	1-126-160-11	s	ELECT 1uF 20% 50V
C412	1-163-038-91	s	CERAMIC, CHIP 0.1uF 25V
C413	1-163-038-91	s	CERAMIC, CHIP 0.1uF 25V
C414	1-124-257-00	s	ELECT 2.2uF 20% 50V
C415	1-163-038-91	s	CERAMIC, CHIP 0.1uF 25V
C416	1-124-589-11	s	ELECT 47uF 20% 16V
C417	1-124-589-11	s	ELECT 47uF 20% 16V
C418	1-163-038-91	s	CERAMIC, CHIP 0.1uF 25V
C419	1-163-037-11	s	CERAMIC, CHIP 0.022uF 10% 25V
C420	1-163-038-91	s	CERAMIC, CHIP 0.1uF 25V
C421	1-163-038-91	s	CERAMIC, CHIP 0.1uF 25V
C422	1-163-037-11	s	CERAMIC, CHIP 0.022uF 10% 25V
C423	1-163-037-11	s	CERAMIC, CHIP 0.022uF 10% 25V
C424	1-163-038-91	s	CERAMIC, CHIP 0.1uF 25V
C425	1-163-038-91	s	CERAMIC, CHIP 0.1uF 25V
C426	1-124-589-11	s	ELECT 47uF 20% 16V
C427	1-124-589-11	s	ELECT 47uF 20% 16V
C428	1-163-038-91	s	CERAMIC, CHIP 0.1uF 25V
C429	1-163-089-00	s	CERAMIC, CHIP 6pF 50V
C430	1-163-038-91	s	CERAMIC, CHIP 0.1uF 25V
C431	1-124-589-11	s	ELECT 47uF 20% 16V
C432-436	1-163-038-91	s	CERAMIC, CHIP 0.1uF 25V

(DA-95 BOARD(ES-7(UC/J)))

Ref. No. or Q'ty	Part No.	SP	Description
C437	1-126-160-11	s	ELECT 1uF 20% 50V
C438	1-163-038-91	s	CERAMIC, CHIP 0.1uF 25V
C439	1-163-038-91	s	CERAMIC, CHIP 0.1uF 25V
C440	1-163-133-00	s	CERAMIC, CHIP 470pF ■ 50V
C441	1-163-038-91	s	CERAMIC, CHIP 0.1uF 25V
C442	1-124-257-00	■	ELECT 2.2uF 20% 50V
C443	1-163-037-11	s	CERAMIC, CHIP 0.022uF 10% 25V
C444	1-163-038-91	s	CERAMIC, CHIP 0.1uF 25V
C445	1-163-038-91	s	CERAMIC, CHIP 0.1uF 25V
C446	1-124-589-11	■	ELECT 47uF 20% 16V
C447	1-163-038-91	s	CERAMIC, CHIP 0.1uF 25V
C448	1-163-038-91	s	CERAMIC, CHIP 0.1uF 25V
C449	1-163-038-91	s	CERAMIC, CHIP 0.1uF 25V
C450	1-124-589-11	s	ELECT 47uF 20% 16V
C451	1-163-038-91	■	CERAMIC, CHIP 0.1uF 25V
C452	1-163-038-91	s	CERAMIC, CHIP 0.1uF 25V
C453	1-163-038-91	s	CERAMIC, CHIP 0.1uF 25V
C454	1-163-038-91	s	CERAMIC, CHIP 0.1uF 25V
C455	1-124-261-00	s	ELECT 10uF 20% 50V
C456	1-163-038-91	■	CERAMIC, CHIP 0.1uF 25V
C457	1-126-160-11	s	ELECT 1uF 20% 50V
C458	1-163-038-91	s	CERAMIC, CHIP 0.1uF 25V
C459	1-163-133-00	■	CERAMIC, CHIP 470pF 5% 50V
C460	1-163-038-91	s	CERAMIC, CHIP 0.1uF 25V
C461	1-124-257-00	s	ELECT 2.2uF 20% 50V
C462	1-163-038-91	■	CERAMIC, CHIP 0.1uF 25V
C463	1-163-038-91	■	CERAMIC, CHIP 0.1uF 25V
C464	1-163-038-91	s	CERAMIC, CHIP 0.1uF 25V
C465	1-163-037-11	■	CERAMIC, CHIP 0.022uF 10% 25V
C466	1-124-589-11	s	ELECT 47uF 20% 16V
C467	1-163-037-11	s	CERAMIC, CHIP 0.022uF 10% 25V
C468-473	1-163-038-91	■	CERAMIC, CHIP 0.1uF 25V
C474	1-124-589-11	s	ELECT 47uF 20% 16V
C475	1-124-589-11	s	ELECT 47uF 20% 16V
C476	1-163-038-91	■	CERAMIC, CHIP 0.1uF 25V
C477	1-163-089-00	s	CERAMIC, CHIP 6pF 50V
C478	1-163-038-91	s	CERAMIC, CHIP 0.1uF 25V
C479	1-163-243-11	s	CERAMIC, CHIP 47pF 5% 50V
C480	1-163-038-91	s	CERAMIC, CHIP 0.1uF 25V
C481	1-163-227-11	s	CERAMIC, CHIP 10pF 5% 50V
C482	1-163-038-91	s	CERAMIC, CHIP 0.1uF 25V
C483	1-124-589-11	s	ELECT 47uF 20% 16V
C484	1-163-038-91	s	CERAMIC, CHIP 0.1uF 25V
C485	1-124-248-00	s	ELECT 22uF 20% 35V
C486	1-124-248-00	s	ELECT 22uF 20% 35V
C487-492	1-163-038-91	s	CERAMIC, CHIP 0.1uF 25V
C600	1-163-038-91	s	CERAMIC, CHIP 0.1uF 25V
C601	1-163-038-91	s	CERAMIC, CHIP 0.1uF 25V
C602	1-163-038-91	s	CERAMIC, CHIP 0.1uF 25V
C603	1-163-038-91	s	CERAMIC, CHIP 0.1uF 25V
C604	1-124-589-11	s	ELECT 47uF 20% 16V
C605	1-124-589-11	s	ELECT 47uF 20% 16V
C606-615	1-163-038-91	s	CERAMIC, CHIP 0.1uF 25V
C616	1-163-221-11	s	CERAMIC, CHIP 4pF 50V
C617	1-163-231-11	s	CERAMIC, CHIP 15pF 5% 50V
C618	1-163-231-11	s	CERAMIC, CHIP 15pF 5% 50V
C619	1-163-038-91	s	CERAMIC, CHIP 0.1uF 25V
C620	1-163-038-91	s	CERAMIC, CHIP 0.1uF 25V
C621	1-124-589-11	s	ELECT 47uF 20% 16V

(DA-95 BOARD(ES-7(UC/J)))

Ref. No. or Q'ty	Part No.	SP	Description
C622	1-124-589-11	■	ELECT 47uF 20% 16V
C623	1-163-038-91	s	CERAMIC, CHIP 0.1uF 25V
C624	1-163-038-91	s	CERAMIC, CHIP 0.1uF 25V
C625	1-163-038-91	s	CERAMIC, CHIP 0.1uF 25V
C626	1-124-589-11	s	ELECT 47uF 20% 16V
C627	1-163-038-91	s	CERAMIC, CHIP 0.1uF 25V
C628	1-163-038-91	s	CERAMIC, CHIP 0.1uF 25V
C629	1-124-589-11	s	ELECT 47uF 20% 16V
C630	1-163-235-11	s	CERAMIC, CHIP 22pF 5% 50V
C631	1-163-038-91	s	CERAMIC, CHIP 0.1uF 25V
C632	1-163-237-11	s	CERAMIC, CHIP 27pF 5% 50V
C633	1-163-038-91	s	CERAMIC, CHIP 0.1uF 25V
C634	1-163-038-91	s	CERAMIC, CHIP 0.1uF 25V
C635	1-163-038-91	s	CERAMIC, CHIP 0.1uF 25V
C636	1-163-038-91	s	CERAMIC, CHIP 0.1uF 25V
C637	1-126-160-11	■	ELECT 1uF 20% 50V
C638	1-163-133-00	■	CERAMIC, CHIP 470pF 5% 50V
C639	1-163-037-11	s	CERAMIC, CHIP 0.022uF 10% 25V
C640	1-124-257-00	s	ELECT 2.2uF 20% 50V
C641	1-124-589-11	s	ELECT 47uF 20% 16V
C642	1-163-038-91	■	CERAMIC, CHIP 0.1uF 25V
C643	1-124-589-11	s	ELECT 47uF 20% 16V
C644	1-163-235-11	■	CERAMIC, CHIP 22pF 5% 50V
C645	1-163-038-91	s	CERAMIC, CHIP 0.1uF 25V
C646	1-163-237-11	■	CERAMIC, CHIP 27pF 5% 50V
C648	1-163-038-91	s	CERAMIC, CHIP 0.1uF 25V
C649	1-163-038-91	s	CERAMIC, CHIP 0.1uF 25V
C650	1-163-038-91	s	CERAMIC, CHIP 0.1uF 25V
C651	1-163-038-91	■	CERAMIC, CHIP 0.1uF 25V
C652	1-126-160-11	s	ELECT 1uF 20% 50V
C653	1-163-133-00	s	CERAMIC, CHIP 470pF 5% 50V
C654	1-163-037-11	s	CERAMIC, CHIP 0.022uF 10% 25V
C655	1-124-257-00	s	ELECT 2.2uF 20% 50V
C656	1-163-038-91	s	CERAMIC, CHIP 0.1uF 25V
C657	1-163-038-91	s	CERAMIC, CHIP 0.1uF 25V
C658	1-163-251-11	■	CERAMIC, CHIP 100pF 5% 50V
C659-663	1-163-038-91	s	CERAMIC, CHIP 0.1uF 25V
C664	1-124-589-11	s	ELECT 47uF 20% 16V
C665	1-124-589-11	s	ELECT 47uF 20% 16V
C666	1-163-038-91	s	CERAMIC, CHIP 0.1uF 25V
C667	1-163-038-91	s	CERAMIC, CHIP 0.1uF 25V
C668	1-163-038-91	s	CERAMIC, CHIP 0.1uF 25V
C669	1-163-038-91	s	CERAMIC, CHIP 0.1uF 25V
C670	1-124-234-00	s	ELECT 22uF 20% 16V
C671	1-163-038-91	s	CERAMIC, CHIP 0.1uF 25V
C672	1-163-038-91	s	CERAMIC, CHIP 0.1uF 25V
C673	1-163-038-91	s	CERAMIC, CHIP 0.1uF 25V
C674	1-124-589-11	s	ELECT 47uF 20% 16V
C675	1-163-038-91	s	CERAMIC, CHIP 0.1uF 25V
C676	1-163-038-91	s	CERAMIC, CHIP 0.1uF 25V
C677	1-163-038-91	s	CERAMIC, CHIP 0.1uF 25V
C678	1-163-038-91	s	CERAMIC, CHIP 0.1uF 25V
C679	1-124-234-00	s	ELECT 22uF 20% 16V
C680	1-124-589-11	s	ELECT 47uF 20% 16V
C681	1-163-038-91	s	CERAMIC, CHIP 0.1uF 25V
C682	1-163-235-11	s	CERAMIC, CHIP 22pF ■ 50V
C683	1-163-038-91	s	CERAMIC, CHIP 0.1uF 25V
C684	1-124-234-00	s	ELECT 22uF 20% 16V
C685	1-164-232-11	s	CERAMIC, CHIP 0.01uF 10% 100V

(DA-95 BOARD(ES-7(UC/J)))

Ref. No. or Q'ty	Part No.	SP	Description
C686	1-163-038-91	s	CERAMIC, CHIP 0.1uF 25V
C687	1-163-038-91	■	CERAMIC, CHIP 0.1uF 25V
C688	1-131-352-00	s	TANTALUM 6.8uF 10% 35V
C689	1-163-038-91	s	CERAMIC, CHIP 0.1uF 25V
C690	1-163-099-00	■	CERAMIC, CHIP 18pF 5% 50V
C691	1-164-232-11	s	CERAMIC, CHIP 0.01uF 10% 100V
C692	1-163-038-91	s	CERAMIC, CHIP 0.1uF 25V
C693	1-163-038-91	s	CERAMIC, CHIP 0.1uF 25V
C694	1-124-589-11	■	ELECT 47uF 20% 16V
C695	1-131-352-00	s	TANTALUM 6.8uF 10% 35V
C696	1-163-038-91	s	CERAMIC, CHIP 0.1uF 25V
C697	1-124-589-11	s	ELECT 47uF 20% 16V
C698	1-124-589-11	s	ELECT 47uF 20% 16V
C699-703	1-163-038-91	s	CERAMIC, CHIP 0.1uF 25V
C704	1-163-113-00	s	CERAMIC, CHIP 68pF 5% 50V
C705	1-163-038-91	s	CERAMIC, CHIP 0.1uF 25V
C706	1-163-251-11	s	CERAMIC, CHIP 100pF 5% 50V
C707	1-163-235-11	s	CERAMIC, CHIP 22pF 5% 50V
C708	1-163-235-11	■	CERAMIC, CHIP 22pF ■ 50V
C709	1-163-235-11	s	CERAMIC, CHIP 22pF 5% 50V
C710	1-163-235-11	s	CERAMIC, CHIP 22pF 5% 50V
C711	1-163-251-11	s	CERAMIC, CHIP 100pF 5% 50V
C712	1-163-251-11	s	CERAMIC, CHIP 100pF 5% 50V
C713	1-163-251-11	s	CERAMIC, CHIP 100pF 5% 50V
C714	1-163-251-11	■	CERAMIC, CHIP 100pF 5% 50V
C715	1-124-465-00	s	ELECT 0.47uF 20% 50V
C716	1-126-160-11	■	ELECT 1uF 20% 50V
C717	1-124-234-00	s	ELECT 22uF 20% 16V
C718	1-163-235-11	s	CERAMIC, CHIP 22pF 5% 50V
C719	1-124-589-11	s	ELECT 47uF 20% 16V
C720	1-124-261-00	s	ELECT 10uF 20% 50V
C721	1-163-038-91	s	CERAMIC, CHIP 0.1uF 25V
C722	1-163-019-00	s	CERAMIC, CHIP 0.0068uF 10% 50V
C723	1-163-139-00	s	CERAMIC, CHIP 820pF 5% 50V
C724	1-126-160-11	s	ELECT 1uF 20% 50V
C725	1-163-245-11	s	CERAMIC, CHIP 56pF ■ 50V
C726	1-163-237-11	s	CERAMIC, CHIP 27pF ■ 50V
C727	1-163-222-11	s	CERAMIC, CHIP 5pF 50V
C728	1-164-232-11	s	CERAMIC, CHIP 0.01uF 10% 100V
C729	1-124-589-11	s	ELECT 47uF 20% 16V
C730	1-124-248-00	s	ELECT 22uF 20% 35V
C731	1-124-248-00	■	ELECT 22uF 20% 35V
C732-743	1-163-038-91	s	CERAMIC, CHIP 0.1uF 25V
C744	1-163-222-11	s	CERAMIC, CHIP 5pF 50V
C745	1-163-038-91	■	CERAMIC, CHIP 0.1uF 25V
C746	1-163-038-91	s	CERAMIC, CHIP 0.1uF 25V
C747	1-163-038-91	s	CERAMIC, CHIP 0.1uF 25V
C748	1-124-589-11	s	ELECT 47uF 20% 16V
C749	1-163-133-00	s	CERAMIC, CHIP 470pF ■ 50V
C800	1-124-589-11	■	ELECT 47uF 20% 16V
C801	1-124-589-11	s	ELECT 47uF 20% 16V
C802-806	1-163-038-91	s	CERAMIC, CHIP 0.1uF 25V
C807	1-124-589-11	s	ELECT 47uF 20% 16V
C808	1-163-038-91	s	CERAMIC, CHIP 0.1uF 25V
C809	1-124-589-11	s	ELECT 47uF 20% 16V
C810	1-124-234-00	s	ELECT 22uF 20% 16V
C811	1-163-038-91	s	CERAMIC, CHIP 0.1uF 25V
C812	1-126-160-11	■	ELECT 1uF 20% 50V
C813	1-163-251-11	s	CERAMIC, CHIP 100pF 5% 50V

(DA-95 BOARD(ES-7(UC/J)))

Ref. No. or Q'ty	Part No.	SP	Description
C814	1-163-038-91	s	CERAMIC, CHIP 0.1uF 25V
C815	1-163-037-11	s	CERAMIC, CHIP 0.022uF 10% 25V
C816	1-124-257-00	s	ELECT 2.2uF 20% 50V
C821-825	1-163-038-91	s	CERAMIC, CHIP 0.1uF 25V
C826	1-124-589-11	s	ELECT 47uF 20% 16V
C827	1-163-251-11	s	CERAMIC, CHIP 100pF ■ 50V
C828	1-124-261-00	s	ELECT 10uF 20% 50V
C829	1-163-038-91	s	CERAMIC, CHIP 0.1uF 25V
C830	1-163-038-91	s	CERAMIC, CHIP 0.1uF 25V
C831	1-163-038-91	s	CERAMIC, CHIP 0.1uF 25V
C832	1-163-038-91	s	CERAMIC, CHIP 0.1uF 25V
C833	1-124-234-00	■	ELECT 22uF 20% 16V
C834	1-163-038-91	s	CERAMIC, CHIP 0.1uF 25V
C835	1-163-038-91	s	CERAMIC, CHIP 0.1uF 25V
C836	1-163-038-91	s	CERAMIC, CHIP 0.1uF 25V
C837	1-124-589-11	s	ELECT 47uF 20% 16V
C838	1-163-038-91	s	CERAMIC, CHIP 0.1uF 25V
C839	1-124-589-11	s	ELECT 47uF 20% 16V
C840	1-163-038-91	s	CERAMIC, CHIP 0.1uF 25V
C841	1-124-589-11	s	ELECT 47uF 20% 16V
C842	1-163-038-91	s	CERAMIC, CHIP 0.1uF 25V
C843	1-163-235-11	s	CERAMIC, CHIP 22pF 5% 50V
C844	1-163-038-91	s	CERAMIC, CHIP 0.1uF 25V
C845	1-124-234-00	s	ELECT 22uF 20% 16V
C846	1-164-232-11	s	CERAMIC, CHIP 0.01uF 10% 100V
C847	1-163-038-91	s	CERAMIC, CHIP 0.1uF 25V
C848	1-163-038-91	s	CERAMIC, CHIP 0.1uF 25V
C849	1-163-038-91	■	CERAMIC, CHIP 0.1uF 25V
C850	1-131-352-00	s	TANTALUM 6.8uF 10% 35V
C851	1-124-589-11	s	ELECT 47uF 20% 16V
C852	1-163-038-91	■	CERAMIC, CHIP 0.1uF 25V
C853	1-163-038-91	s	CERAMIC, CHIP 0.1uF 25V
C854	1-163-099-00	s	CERAMIC, CHIP 18pF 5% 50V
C855	1-164-232-11	s	CERAMIC, CHIP 0.01uF 10% 100V
C856	1-163-038-91	s	CERAMIC, CHIP 0.1uF 25V
C857	1-131-352-00	s	TANTALUM 6.8uF 10% 35V
C858	1-163-038-91	s	CERAMIC, CHIP 0.1uF 25V
C859	1-163-038-91	s	CERAMIC, CHIP 0.1uF 25V
C860	1-124-589-11	s	ELECT 47uF 20% 16V
C861	1-124-589-11	s	ELECT 47uF 20% 16V
C862	1-163-038-91	s	CERAMIC, CHIP 0.1uF 25V
C863	1-163-038-91	s	CERAMIC, CHIP 0.1uF 25V
C867	1-163-113-00	s	CERAMIC, CHIP 68pF 5% 50V
C868	1-163-038-91	s	CERAMIC, CHIP 0.1uF 25V
C869	1-163-038-91	s	CERAMIC, CHIP 0.1uF 25V
C870	1-124-589-11	s	ELECT 47uF 20% 16V
C871	1-124-589-11	s	ELECT 47uF 20% 16V
C872	1-163-038-91	s	CERAMIC, CHIP 0.1uF 25V
C873	1-163-038-91	s	CERAMIC, CHIP 0.1uF 25V
C874	1-163-237-11	s	CERAMIC, CHIP 27pF 5% 50V
C875	1-163-038-91	s	CERAMIC, CHIP 0.1uF 25V
C876	1-163-038-91	s	CERAMIC, CHIP 0.1uF 25V
C877	1-124-589-11	s	ELECT 47uF 20% 16V
C878	1-163-234-11	s	CERAMIC, CHIP 20pF 5% 50V
C879	1-163-239-11	s	CERAMIC, CHIP 33pF 5% 50V
C880	1-124-261-00	s	ELECT 10uF 20% 50V
C904	1-163-038-91	s	CERAMIC, CHIP 0.1uF 25V
C905	1-126-933-11	s	ELECT 100uF 20% 16V
C906	1-163-038-91	s	CERAMIC, CHIP 0.1uF 25V

(DA-95 BOARD(ES-7(UC/J)))

Ref. No. or Q'ty	Part No.	SP	Description
C907	1-163-038-91	s	CERAMIC, CHIP 0.1uF 25V
C908	1-107-889-11	s	ELECT 220uF 20% 25V
C909	1-163-038-91	s	CERAMIC, CHIP 0.1uF 25V
C910	1-163-038-91	s	CERAMIC, CHIP 0.1uF 25V
C911	1-107-889-11	s	ELECT 220uF 20% 25V
C912	1-126-933-11	s	ELECT 100uF 20% 16V
C913	1-163-038-91	■	CERAMIC, CHIP 0.1uF 25V
C914	1-163-038-91	s	CERAMIC, CHIP 0.1uF 25V
C915	1-107-889-11	s	ELECT 220uF 20% 25V
C916	1-163-038-91	■	CERAMIC, CHIP 0.1uF 25V
C917	1-163-038-91	s	CERAMIC, CHIP 0.1uF 25V
C918	1-107-889-11	s	ELECT 220uF 20% 25V
C919	1-163-038-91	s	CERAMIC, CHIP 0.1uF 25V
C920	1-126-933-11	s	ELECT 100uF 20% 16V
C921	1-163-038-91	s	CERAMIC, CHIP 0.1uF 25V
C922	1-163-038-91	s	CERAMIC, CHIP 0.1uF 25V
C923	1-126-934-11	s	ELECT 220uF 20% 16V
C927	1-126-933-11	■	ELECT 100uF 20% 16V
C928	1-126-934-11	s	ELECT 220uF 20% 16V
C932	1-107-889-11	s	ELECT 220uF 20% 25V
C933	1-163-038-91	s	CERAMIC, CHIP 0.1uF 25V
C934	1-163-038-91	s	CERAMIC, CHIP 0.1uF 25V
CN514	1-766-794-11	o	CONNECTOR, DIN 64P, FEMALE
CN531	1-766-239-11	o	CONNECTOR, CIRCULAR 4P(S), FEMALE
CN532	1-774-965-11	o	CONNECTOR, 3-BNC, FEMALE
CN533	1-774-965-11	■	CONNECTOR, 3-BNC, FEMALE
CN534	1-766-239-11	o	CONNECTOR, CIRCULAR 4P(S), FEMALE
CN535	1-774-966-11	o	CONNECTOR, 4-BNC, FEMALE
CN536	1-774-965-11	o	CONNECTOR, 3-BNC, FEMALE
CN611	1-778-261-11	o	CONNECTOR, BB 124P, MALE
CN613	1-778-261-11	o	CONNECTOR, BB 124P, MALE
CNI124	1-526-816-21	s	SOCKET, IC (DP) 24P
D100	8-719-800-76	s	DIODE 1SS226
D101	8-719-800-76	s	DIODE 1SS226
D300	8-719-105-28	■	DIODE RD2.4M-B
D301	8-719-105-28	s	DIODE RD2.4M-B
D302	8-719-105-28	s	DIODE RD2.4M-B
D400	8-719-105-28	s	DIODE RD2.4M-B
D401	8-719-105-28	s	DIODE RD2.4M-B
D402	8-719-105-28	s	DIODE RD2.4M-B
D403	8-719-105-57	■	DIODE RD3.9M-B1
D602	8-719-800-76	s	DIODE 1SS226
D603	8-719-801-78	s	DIODE 1SS184
D604	8-719-801-78	■	DIODE 1SS184
D800	8-719-800-76	s	DIODE 1SS226
FB800	1-500-184-11	■	BEAD, FERRITE
FB801	1-500-184-11	s	BEAD, FERRITE
FB802	1-500-184-11	s	BEAD, FERRITE
FB803	1-500-184-11	s	BEAD, FERRITE
FB901-910	1-500-202-11	s	BEAD, FERRITE
FL100	1-239-642-21	s	EMIFIL ARRAY, CHIP
FL101	1-233-314-11	s	FILTER, NOISE, CHIP
FL102	1-233-314-11	s	FILTER, NOISE, CHIP
FL103	1-239-642-21	s	EMIFIL ARRAY, CHIP
FL104	1-239-642-21	s	EMIFIL ARRAY, CHIP

(DA-95 BOARD(ES-7(UC/J)))

Ref. No. or Q'ty	Part No.	SP	Description
FL300	1-233-614-11	s	FILTER, LOW-PASS
FL301	1-233-599-11	s	FILTER, LOW-PASS
FL302	1-233-599-11	s	FILTER, LOW-PASS
FL400-415	1-233-314-11	s	FILTER, NOISE, CHIP
FL600	1-235-758-11	s	FILTER, LOW-PASS
FL601	1-235-758-11	s	FILTER, LOW-PASS
FL602	1-235-161-00	s	FILTER, BANDPASS 3.58MHz
FL603	1-235-584-11	s	FILTER, LOW-PASS
FL604	1-235-161-00	s	FILTER, BANDPASS 3.58MHz
FL605	1-233-314-11	s	FILTER, NOISE, CHIP
FL606	1-233-314-11	s	FILTER, NOISE, CHIP
FL607	1-233-314-11	s	FILTER, NOISE, CHIP
FL608	1-233-314-11	s	FILTER, NOISE, CHIP
FL611	1-233-314-11	s	FILTER, NOISE, CHIP
FL614	1-233-314-11	■	FILTER, NOISE, CHIP
FL615	1-233-314-11	s	FILTER, NOISE, CHIP
FL616	1-233-314-11	s	FILTER, NOISE, CHIP
FL800	1-235-584-11	s	FILTER, LOW-PASS
FL801	1-235-161-00	s	FILTER, BANDPASS 3.58MHz
FL802	1-235-161-00	s	FILTER, BANDPASS 3.58MHz
FL803	1-235-786-11	s	FILTER, LOW-PASS
FL804	1-233-314-11	■	FILTER, NOISE, CHIP
FL806	1-233-314-11	s	FILTER, NOISE, CHIP
FL808	1-233-314-11	s	FILTER, NOISE, CHIP
FL810	1-233-314-11	■	FILTER, NOISE, CHIP
IC100	8-759-245-45	s	IC TA78L09F
IC101	8-759-987-27	s	IC LM1881M
IC102	8-759-515-09	s	IC SN74ALS374ANS
IC103	8-759-929-26	s	IC TL431CPS
IC104	8-759-929-21	s	IC TLC27L2CPS
IC105	8-759-239-34	s	IC TC74HC4538AF
IC106	8-752-335-47	s	IC CXD1216M
IC107	8-759-242-64	s	IC TC4W53F
IC108	8-759-926-44	s	IC SN74HC240ANS
IC109	8-752-332-67	s	IC CXD1217M
IC110	8-759-288-01	s	IC SM5828BP
IC111	8-759-926-67	s	IC SN74HC374ANS
IC112	8-759-926-67	s	IC SN74HC374ANS
IC113	8-759-926-67	s	IC SN74HC374ANS
IC114	8-759-925-74	s	IC TC74HC04ANS
IC115	8-759-515-09	s	IC SN74ALS374ANS
IC116	8-759-242-64	s	IC TC4W53F
IC117	8-759-239-58	s	IC TC74HC221AF
IC118	8-759-295-09	s	IC TLC2932IPW
IC119	8-759-981-48	s	IC NJM082M
IC121	8-759-037-79	s	IC MC74HC163AF
IC122	8-759-037-79	s	IC MC74HC163AF
IC123	8-759-037-79	s	IC MC74HC163AF
IC124	8-759-436-63	o	IC 20V8B-ES7-DA124V1.20
IC125	8-759-925-90	s	IC SN74HC74ANS
IC126	8-759-926-24	s	IC SN74HC164ANS
IC128	8-759-926-24	s	IC SN74HC164ANS
IC129	8-759-925-74	s	IC TC74HC04ANS
IC130	8-759-359-54	■	IC SN74ALS244CNS-E20
IC131	8-759-037-79	s	IC MC74HC163AF
IC132	8-759-037-79	s	IC MC74HC163AF
IC133	8-759-037-79	s	IC MC74HC163AF

(DA-95 BOARD(ES-7(UC/J)))

Ref. No. or Q'ty	Part No.	SP	Description
IC134	8-759-037-79	s	IC MC74HC163AF
IC135	8-759-925-74	s	IC TC74HC04ANS
IC136	8-759-926-67	s	IC SN74HC374ANS
IC137	8-759-925-90	s	IC SN74HC74ANS
IC138	8-759-037-79	s	IC MC74HC163AF
IC139	8-759-037-79	■	IC MC74HC163AF
IC140	8-759-927-46	■	IC SN74HC00ANS
IC141	8-759-926-48	s	IC SN74HC244NS
IC142	8-759-925-78	s	IC SN74HC10ANS
IC143	8-759-973-85	s	IC SN74ALS74ANS
IC144	8-759-925-76	s	IC SN74HC08ANS
IC145	8-759-925-74	s	IC TC74HC04ANS
IC147	8-759-934-41	■	IC SN74ALS240ANS
IC148	8-759-981-48	s	IC NJM082M
IC300	8-759-359-54	■	IC SN74ALS244CNS-E20
IC301	8-759-515-09	s	IC SN74ALS374ANS
IC302	8-759-515-09	s	IC SN74ALS374ANS
IC303	8-759-515-09	s	IC SN74ALS374ANS
IC304	8-759-925-90	s	IC SN74HC74ANS
IC305	8-759-099-38	s	IC SN74HCT374ANS-E05
IC306	8-759-099-38	s	IC SN74HCT374ANS-E05
IC307	8-759-099-38	s	IC SN74HCT374ANS-E05
IC308	8-759-099-38	s	IC SN74HCT374ANS-E05
IC309	8-759-099-38	■	IC SN74HCT374ANS-E05
IC310	8-759-099-38	s	IC SN74HCT374ANS-E05
IC311	8-759-099-38	s	IC SN74HCT374ANS-E05
IC312	8-752-032-93	■	IC CXA1260Q-Z
IC313	8-759-929-26	s	IC TL431CPS
IC314	8-752-052-82	s	IC CXA1432M
IC315	8-759-271-04	s	IC LT1252CS8
IC316	8-752-052-82	s	IC CXA1432M
IC317	8-759-271-04	■	IC LT1252CS8
IC318	8-752-052-82	s	IC CXA1432M
IC319	8-759-271-04	■	IC LT1252CS8
IC320	8-759-099-38	s	IC SN74HCT374ANS-E05
IC321	8-759-045-17	s	IC NJM79L05UA
IC322	8-759-245-45	s	IC TA78L09F
IC323	8-759-926-44	s	IC SN74HC240ANS
IC324	8-759-925-74	s	IC TC74HC04ANS
IC325	8-759-925-90	s	IC SN74HC74ANS
IC326	8-759-045-17	s	IC NJM79L05UA
IC327	8-759-045-17	s	IC NJM79L05UA
IC328	8-759-099-38	s	IC SN74HCT374ANS-E05
IC400	8-752-052-73	s	IC CXA1451M
IC401	8-759-242-64	■	IC TC4W53F
IC402	8-752-052-73	■	IC CXA1451M
IC403	8-752-052-73	■	IC CXA1451M
IC404	8-759-242-64	■	IC TC4W53F
IC405	8-752-052-73	s	IC CXA1451M
IC406	8-752-052-73	■	IC CXA1451M
IC407	8-759-242-64	s	IC TC4W53F
IC408	8-752-052-73	s	IC CXA1451M
IC409	8-759-245-45	s	IC TA78L09F
IC410	8-759-045-17	s	IC NJM79L05UA
IC411	8-759-045-17	s	IC NJM79L05UA
IC412	8-759-045-17	s	IC NJM79L05UA
IC600	8-759-242-64	s	IC TC4W53F
IC601	8-759-271-04	s	IC LT1252CS8
IC602	8-752-052-73	s	IC CXA1451M

(DA-95 BOARD(ES-7(UC/J)))

Ref. No. or Q'ty	Part No.	SP	Description
IC603	8-759-262-03	s	IC MC14577CF
IC604	8-759-906-59	s	IC CX22017
IC605	8-759-271-04	■	IC LT1252CS8
IC606	8-759-262-03	s	IC MC14577CF
IC607	8-759-245-45	s	IC TA78L09F
IC608	8-759-300-71	s	IC HD14053BFP
IC609	8-759-239-23	s	IC TC74HC86AF
IC610	8-759-902-88	■	IC SN74LS123NS
IC611	8-759-933-65	s	IC SN74LS244NS
IC612	8-759-285-16	s	IC LC74760M-9070-TLM
IC613	8-759-510-71	s	IC BA10358F
IC614	8-759-925-85	■	IC SN74HC32ANS
IC615	8-759-926-24	s	IC SN74HC164ANS
IC616	8-759-926-82	s	IC SN74HC574ANS
IC617	8-759-242-64	s	IC TC4W53F
IC618	8-759-262-03	s	IC MC14577CF
IC619	8-759-242-64	s	IC TC4W53F
IC800	8-759-906-59	s	IC CX22017
IC801	8-759-245-45	s	IC TA78L09F
IC802	8-759-300-71	s	IC HD14053BFP
IC803	8-759-239-23	■	IC TC74HC86AF
IC804	8-759-902-88	s	IC SN74LS123NS
IC805	8-752-052-82	s	IC CXA1432M
IC806	8-752-052-73	s	IC CXA1451M
IC807	8-752-052-73	s	IC CXA1451M
IC808	8-759-510-71	s	IC BA10358F
IC900	8-759-157-17	s	IC PQ05SZ1U
IC901	8-759-701-84	s	IC NJM7905FA
IC902	8-759-157-17	s	IC PQ05SZ1U
L100	1-410-478-11	s	INDUCTOR 47uH
L101	1-408-425-00	s	INDUCTOR 220uH
L102	1-410-482-31	■	INDUCTOR 100uH
L103	1-410-478-11	■	INDUCTOR 47uH
L104	1-410-478-11	s	INDUCTOR 47uH
L105	1-410-478-11	s	INDUCTOR 47uH
L106	1-408-413-00	s	INDUCTOR 22uH
L107	1-410-478-11	s	INDUCTOR 47uH
L108	1-410-478-11	s	INDUCTOR 47uH
L109	1-410-478-11	s	INDUCTOR 47uH
L111	1-410-470-11	s	INDUCTOR 10uH
L112-117	1-410-478-11	s	INDUCTOR 47uH
L118	1-408-413-00	s	INDUCTOR 22uH
L119	1-410-478-11	s	INDUCTOR 47uH
L300	1-408-413-00	s	INDUCTOR 22uH
L301	1-408-413-00	s	INDUCTOR 22uH
L302	1-410-478-11	s	INDUCTOR 47uH
L304	1-410-478-11	s	INDUCTOR 47uH
L306	1-410-478-11	s	INDUCTOR 47uH
L400	1-410-478-11	s	INDUCTOR 47uH
L402	1-410-478-11	s	INDUCTOR 47uH
L406	1-410-482-31	■	INDUCTOR 100uH
L407	1-410-478-11	s	INDUCTOR 47uH
L408	1-410-478-11	s	INDUCTOR 47uH
L600-610	1-410-478-11	s	INDUCTOR 47uH
L611	1-408-413-00	s	INDUCTOR 22uH
L612	1-408-406-00	■	INDUCTOR 5.6uH
L613	1-408-413-00	s	INDUCTOR 22uH
L614	1-410-478-11	s	INDUCTOR 47uH
L800	1-410-478-11	s	INDUCTOR 47uH

(DA-95 BOARD(ES-7(UC/J)))

Ref. No. or Q'ty	Part No.	SP	Description
L801	1-410-478-11	s	INDUCTOR 47uH
L803-809	1-410-478-11	s	INDUCTOR 47uH
L810	1-410-462-11	s	INDUCTOR 2.2uH
L901	1-412-525-31	s	INDUCTOR 10uH
L902	1-412-525-31	s	INDUCTOR 10uH
L903	1-412-525-31	s	INDUCTOR 10uH
L904	1-412-525-31	s	INDUCTOR 10uH
PS900 ⚠	1-532-637-00	s	LINK, IC 1.0A
PS901 ⚠	1-532-637-00	s	LINK, IC 1.0A
PS902 ⚠	1-532-637-00	s	LINK, IC 1.0A
PS903 ⚠	1-532-637-00	s	LINK, IC 1.0A
Q100-104	8-729-120-28	■	TRANSISTOR 2SC1623-L5L6
Q105	8-729-216-22	s	TRANSISTOR 2SA1162
Q106	8-729-216-22	s	TRANSISTOR 2SA1162
Q107	8-729-120-28	■	TRANSISTOR 2SC1623-L5L6
Q108	8-729-120-28	s	TRANSISTOR 2SC1623-L5L6
Q109	8-729-106-60	s	TRANSISTOR 2SB1115A
Q110	8-729-216-22	s	TRANSISTOR 2SA1162
Q300	8-729-120-28	s	TRANSISTOR 2SC1623-L5L6
Q301	8-729-120-28	s	TRANSISTOR 2SC1623-L5L6
Q302	8-729-216-22	s	TRANSISTOR 2SA1162
Q303-307	8-729-120-28	s	TRANSISTOR 2SC1623-L5L6
Q308	8-729-216-22	s	TRANSISTOR 2SA1162
Q309	8-729-216-22	s	TRANSISTOR 2SA1162
Q310-314	8-729-120-28	s	TRANSISTOR 2SC1623-L5L6
Q315	8-729-216-22	s	TRANSISTOR 2SA1162
Q316	8-729-216-22	■	TRANSISTOR 2SA1162
Q317	8-729-120-28	■	TRANSISTOR 2SC1623-L5L6
Q400	8-729-120-28	s	TRANSISTOR 2SC1623-L5L6
Q401	8-729-216-22	■	TRANSISTOR 2SA1162
Q402	8-729-120-28	s	TRANSISTOR 2SC1623-L5L6
Q403	8-729-907-26	s	TRANSISTOR IMX1
Q404	8-729-120-28	s	TRANSISTOR 2SC1623-L5L6
Q405	8-729-120-28	s	TRANSISTOR 2SC1623-L5L6
Q406	8-729-216-22	■	TRANSISTOR 2SA1162
Q407	8-729-216-22	s	TRANSISTOR 2SA1162
Q408	8-729-216-22	s	TRANSISTOR 2SA1162
Q409	8-729-120-28	■	TRANSISTOR 2SC1623-L5L6
Q410	8-729-216-22	s	TRANSISTOR 2SA1162
Q411	8-729-120-28	■	TRANSISTOR 2SC1623-L5L6
Q412	8-729-216-22	s	TRANSISTOR 2SA1162
Q413	8-729-216-22	s	TRANSISTOR 2SA1162
Q414	8-729-120-28	s	TRANSISTOR 2SC1623-L5L6
Q415	8-729-120-28	■	TRANSISTOR 2SC1623-L5L6
Q416	8-729-120-28	s	TRANSISTOR 2SC1623-L5L6
Q417	8-729-216-22	s	TRANSISTOR 2SA1162
Q418	8-729-120-28	s	TRANSISTOR 2SC1623-L5L6
Q419	8-729-907-26	s	TRANSISTOR IMX1
Q420	8-729-120-28	s	TRANSISTOR 2SC1623-L5L6
Q421	8-729-120-28	s	TRANSISTOR 2SC1623-L5L6
Q422	8-729-216-22	s	TRANSISTOR 2SA1162
Q423	8-729-216-22	s	TRANSISTOR 2SA1162
Q424	8-729-120-28	■	TRANSISTOR 2SC1623-L5L6
Q425	8-729-216-22	s	TRANSISTOR 2SA1162
Q426	8-729-907-26	■	TRANSISTOR IMX1
Q427	8-729-120-28	s	TRANSISTOR 2SC1623-L5L6
Q428	8-729-120-28	s	TRANSISTOR 2SC1623-L5L6
Q429	8-729-216-22	s	TRANSISTOR 2SA1162

(DA-95 BOARD(ES-7(UC/J)))

Ref. No. or Q'ty	Part No.	SP	Description
Q430	8-729-216-22	s	TRANSISTOR 2SA1162
Q431	8-729-120-28	s	TRANSISTOR 2SC1623-L5L6
Q432	8-729-216-22	s	TRANSISTOR 2SA1162
Q433	8-729-216-22	■	TRANSISTOR 2SA1162
Q434	8-729-120-28	■	TRANSISTOR 2SC1623-L5L6
Q435	8-729-120-28	s	TRANSISTOR 2SC1623-L5L6
Q436	8-729-120-28	s	TRANSISTOR 2SC1623-L5L6
Q437	8-729-120-28	s	TRANSISTOR 2SC1623-L5L6
Q438	8-729-907-26	s	TRANSISTOR IMX1
Q439	8-729-120-28	s	TRANSISTOR 2SC1623-L5L6
Q440	8-729-120-28	s	TRANSISTOR 2SC1623-L5L6
Q441	8-729-120-28	s	TRANSISTOR 2SC1623-L5L6
Q442	8-729-120-28	s	TRANSISTOR 2SC1623-L5L6
Q443	8-729-216-22	s	TRANSISTOR 2SA1162
Q444	8-729-120-28	s	TRANSISTOR 2SC1623-L5L6
Q445	8-729-120-28	s	TRANSISTOR 2SC1623-L5L6
Q446	8-729-216-22	s	TRANSISTOR 2SA1162
Q600	8-729-216-22	■	TRANSISTOR 2SA1162
Q604	8-729-120-28	■	TRANSISTOR 2SC1623-L5L6
Q605	8-729-216-22	s	TRANSISTOR 2SA1162
Q606	8-729-216-22	■	TRANSISTOR 2SA1162
Q607-612	8-729-120-28	s	TRANSISTOR 2SC1623-L5L6
Q613	8-729-216-22	s	TRANSISTOR 2SA1162
Q614	8-729-120-28	s	TRANSISTOR 2SC1623-L5L6
Q615	8-729-120-28	s	TRANSISTOR 2SC1623-L5L6
Q617	8-729-120-28	s	TRANSISTOR 2SC1623-L5L6
Q618	8-729-120-28	■	TRANSISTOR 2SC1623-L5L6
Q619	8-729-120-28	■	TRANSISTOR 2SC1623-L5L6
Q620	8-729-216-22	s	TRANSISTOR 2SA1162
Q621	8-729-216-22	s	TRANSISTOR 2SA1162
Q622	8-729-216-22	s	TRANSISTOR 2SA1162
Q623	8-729-120-28	s	TRANSISTOR 2SC1623-L5L6
Q624	8-729-216-22	s	TRANSISTOR 2SA1162
Q626	8-729-120-28	s	TRANSISTOR 2SC1623-L5L6
Q627	8-729-120-28	s	TRANSISTOR 2SC1623-L5L6
Q628	8-729-027-59	■	TRANSISTOR DTC144EKA-T146
Q629	8-729-120-28	s	TRANSISTOR 2SC1623-L5L6
Q630	8-729-216-22	s	TRANSISTOR 2SA1162
Q631	8-729-120-28	s	TRANSISTOR 2SC1623-L5L6
Q632	8-729-120-28	s	TRANSISTOR 2SC1623-L5L6
Q633	8-729-216-22	s	TRANSISTOR 2SA1162
Q634	8-729-120-28	s	TRANSISTOR 2SC1623-L5L6
Q635	8-729-120-28	s	TRANSISTOR 2SC1623-L5L6
Q636	8-729-120-28	s	TRANSISTOR 2SC1623-L5L6
Q637	8-729-120-28	s	TRANSISTOR 2SC1623-L5L6
Q638	8-729-216-22	s	TRANSISTOR 2SA1162
Q639	8-729-216-22	s	TRANSISTOR 2SA1162
Q640	8-729-216-22	s	TRANSISTOR 2SA1162
Q800	8-729-120-28	s	TRANSISTOR 2SC1623-L5L6
Q801	8-729-120-28	s	TRANSISTOR 2SC1623-L5L6
Q802	8-729-216-22	s	TRANSISTOR 2SA1162
Q803	8-729-216-22	s	TRANSISTOR 2SA1162
Q804	8-729-216-22	s	TRANSISTOR 2SA1162
Q807	8-729-120-28	s	TRANSISTOR 2SC1623-L5L6
Q808	8-729-120-28	s	TRANSISTOR 2SC1623-L5L6
Q809	8-729-027-59	s	TRANSISTOR DTC144EKA-T146
Q810	8-729-120-28	s	TRANSISTOR 2SC1623-L5L6
Q811	8-729-216-22	■	TRANSISTOR 2SA1162
Q812	8-729-120-28	■	TRANSISTOR 2SC1623-L5L6

(DA-95 BOARD(ES-7(UC/J)))

Ref. No. or Q'ty	Part No.	SP	Description
Q813	8-729-120-28	s	TRANSISTOR 2SC1623-L5L6
Q814	8-729-216-22	s	TRANSISTOR 2SA1162
Q815	8-729-120-28	s	TRANSISTOR 2SC1623-L5L6
Q816	8-729-216-22	s	TRANSISTOR 2SA1162
Q817	8-729-120-28	s	TRANSISTOR 2SC1623-L5L6
Q818	8-729-216-22	s	TRANSISTOR 2SA1162
R100	1-216-029-00	s	METAL, CHIP 150 5% 1/10W
R101	1-216-029-00	s	METAL, CHIP 150 5% 1/10W
R102	1-216-097-91	s	METAL, CHIP 100k 5% 1/10W
R103	1-216-097-91	s	METAL, CHIP 100k 5% 1/10W
R104	1-216-029-00	s	METAL, CHIP 150 5% 1/10W
R105	1-216-065-00	s	METAL, CHIP 4.7k 5% 1/10W
R106	1-216-057-00	s	METAL, CHIP 2.2k 5% 1/10W
R107	1-216-049-91	s	METAL, CHIP 1k 5% 1/10W
R108	1-216-065-00	s	METAL, CHIP 4.7k 5% 1/10W
R109	1-216-065-00	s	METAL, CHIP 4.7k 5% 1/10W
R110	1-216-117-00	s	METAL, CHIP 680k 5% 1/10W
R111	1-216-079-00	■	METAL, CHIP 18k 5% 1/10W
R112	1-216-073-00	s	METAL, CHIP 10k 5% 1/10W
R113	1-216-061-00	s	METAL, CHIP 3.3k 5% 1/10W
R114	1-216-057-00	■	METAL, CHIP 2.2k 5% 1/10W
R115	1-216-059-00	s	METAL, CHIP 2.7k 5% 1/10W
R116	1-216-093-00	■	METAL, CHIP 68k 5% 1/10W
R117	1-216-103-00	s	METAL, CHIP 180k 5% 1/10W
R118	1-216-053-00	s	METAL, CHIP 1.5k 5% 1/10W
R119	1-216-053-00	s	METAL, CHIP 1.5k 5% 1/10W
R120	1-216-059-00	s	METAL, CHIP 2.7k 5% 1/10W
R121	1-216-073-00	s	METAL, CHIP 10k 5% 1/10W
R122	1-216-081-00	■	METAL, CHIP 22k 5% 1/10W
R123	1-216-025-91	■	METAL, CHIP 100 5% 1/10W
R124	1-216-061-00	s	METAL, CHIP 3.3k 5% 1/10W
R125	1-216-039-00	s	METAL, CHIP 390 5% 1/10W
R126	1-216-073-00	s	METAL, CHIP 10k 5% 1/10W
R127	1-216-073-00	■	METAL, CHIP 10k 5% 1/10W
R128	1-216-063-91	s	METAL, CHIP 3.9k 5% 1/10W
R129	1-216-035-00	■	METAL, CHIP 270 5% 1/10W
R130	1-216-069-00	s	METAL, CHIP 6.8k 5% 1/10W
R131	1-216-033-00	s	METAL, CHIP 220 5% 1/10W
R132	1-216-077-00	■	METAL, CHIP 15k 5% 1/10W
R133	1-216-089-91	s	METAL, CHIP 47k 5% 1/10W
R134	1-216-065-00	s	METAL, CHIP 4.7k 5% 1/10W
R135	1-216-081-00	s	METAL, CHIP 22k 5% 1/10W
R137	1-216-065-00	s	METAL, CHIP 4.7k 5% 1/10W
R138	1-216-057-00	s	METAL, CHIP 2.2k 5% 1/10W
R139	1-216-061-00	s	METAL, CHIP 3.3k 5% 1/10W
R140	1-216-057-00	s	METAL, CHIP 2.2k 5% 1/10W
R141	1-216-069-00	s	METAL, CHIP 6.8k 5% 1/10W
R142	1-216-049-91	■	METAL, CHIP 1k 5% 1/10W
R143	1-216-049-91	■	METAL, CHIP 1k 5% 1/10W
R145	1-216-295-91	s	RES, CHIP 0
R146	1-216-085-00	s	METAL, CHIP 33k 5% 1/10W
R147	1-216-659-11	s	METAL, CHIP 2.2k 0.5% 1/10W
R148	1-216-049-91	s	METAL, CHIP 1k 5% 1/10W
R149	1-216-049-91	■	METAL, CHIP 1k 5% 1/10W
R150	1-216-295-91	s	RES, CHIP 0
R152	1-216-057-00	s	METAL, CHIP 2.2k 5% 1/10W
R154	1-216-065-00	s	METAL, CHIP 4.7k 5% 1/10W
R155	1-216-065-00	■	METAL, CHIP 4.7k 5% 1/10W

(DA-95 BOARD(ES-7(UC/J)))

Ref. No. or Q'ty	Part No.	SP	Description
R156	1-216-061-00	s	METAL, CHIP 3.3k 5% 1/10W
R157	1-216-057-00	s	METAL, CHIP 2.2k 5% 1/10W
R158	1-216-073-00	s	METAL, CHIP 10k 5% 1/10W
R159	1-216-085-00	s	METAL, CHIP 33k 5% 1/10W
R161	1-216-073-00	s	METAL, CHIP 10k 5% 1/10W
R162	1-216-073-00	s	METAL, CHIP 10k 5% 1/10W
R163	1-216-121-91	s	METAL, CHIP 1M 5% 1/10W
R164	1-216-121-91	s	METAL, CHIP 1M 5% 1/10W
R165	1-216-295-91	s	RES, CHIP 0
R167	1-216-017-91	s	METAL, CHIP 47 5% 1/10W
R168	1-216-065-00	s	METAL, CHIP 4.7k 5% 1/10W
R169	1-216-295-91	s	RES, CHIP 0
R170	1-216-017-91	s	METAL, CHIP 47 5% 1/10W
R172	1-216-057-00	s	METAL, CHIP 2.2k 5% 1/10W
R173	1-216-057-00	■	METAL, CHIP 2.2k 5% 1/10W
R175	1-216-041-00	s	METAL, CHIP 470 5% 1/10W
R176	1-216-041-00	s	METAL, CHIP 470 5% 1/10W
R177	1-216-041-00	s	METAL, CHIP 470 5% 1/10W
R178	1-216-041-00	s	METAL, CHIP 470 5% 1/10W
R179	1-216-295-91	s	RES, CHIP 0
R180	1-216-651-11	■	METAL, CHIP 1k 0.5% 1/10W
R181	1-216-611-11	s	METAL, CHIP 22 0.5% 1/10W
R182	1-208-784-11	s	METAL, CHIP 1.2k 0.5% 1/10W
R183	1-216-295-91	s	RES, CHIP 0
R184	1-216-635-11	s	METAL, CHIP 220 0.5% 1/10W
R185	1-216-049-91	s	METAL, CHIP 1k 5% 1/10W
R186	1-216-049-91	s	METAL, CHIP 1k 5% 1/10W
R187	1-216-053-00	s	METAL, CHIP 1.5k 5% 1/10W
R188	1-216-053-00	s	METAL, CHIP 1.5k 5% 1/10W
R189	1-216-053-00	s	METAL, CHIP 1.5k 5% 1/10W
R190	1-216-049-91	■	METAL, CHIP 1k 5% 1/10W
R191	1-216-033-00	s	METAL, CHIP 220 5% 1/10W
R192	1-216-017-91	s	METAL, CHIP 47 5% 1/10W
R193	1-216-045-00	s	METAL, CHIP 680 5% 1/10W
R194	1-216-651-11	s	METAL, CHIP 1k 0.5% 1/10W
R195	1-216-065-00	s	METAL, CHIP 4.7k 5% 1/10W
R196	1-216-049-91	s	METAL, CHIP 1k 5% 1/10W
R197	1-216-061-00	s	METAL, CHIP 3.3k 5% 1/10W
R198	1-216-053-00	s	METAL, CHIP 1.5k 5% 1/10W
R199	1-216-049-91	s	METAL, CHIP 1k 5% 1/10W
R200	1-216-029-00	s	METAL, CHIP 150 5% 1/10W
R201	1-216-009-00	s	METAL, CHIP 22 5% 1/10W
R202	1-216-009-00	s	METAL, CHIP 22 5% 1/10W
R203	1-216-009-00	s	METAL, CHIP 22 5% 1/10W
R204	1-216-065-00	s	METAL, CHIP 4.7k 5% 1/10W
R205	1-216-049-91	s	METAL, CHIP 1k 5% 1/10W
R206	1-216-065-00	■	METAL, CHIP 4.7k 5% 1/10W
R208	1-216-295-91	s	RES, CHIP 0
R209	1-216-057-00	■	METAL, CHIP 2.2k 5% 1/10W
R210	1-216-073-00	s	METAL, CHIP 10k 5% 1/10W
R211	1-216-065-00	s	METAL, CHIP 4.7k 5% 1/10W
R212	1-216-073-00	s	METAL, CHIP 10k 5% 1/10W
R213	1-216-061-00	s	METAL, CHIP 3.3k 5% 1/10W
R214	1-216-057-00	s	METAL, CHIP 2.2k 5% 1/10W
R215	1-216-097-91	s	METAL, CHIP 100k 5% 1/10W
R216	1-216-065-00	s	METAL, CHIP 4.7k 5% 1/10W
R217	1-216-061-00	s	METAL, CHIP 3.3k 5% 1/10W
R219	1-216-017-91	s	METAL, CHIP 47 5% 1/10W
R220	1-216-017-91	s	METAL, CHIP 47 5% 1/10W

(DA-95 BOARD(ES-7(UC/J)))

Ref. No. or Q'ty	Part No.	SP	Description
R221	1-216-659-11	s	METAL, CHIP 2.2k 0.5% 1/10W
R222	1-216-295-91	s	RES, CHIP 0
R223	1-216-295-91	s	RES, CHIP 0
R225	1-216-295-91	s	RES, CHIP 0
R227	1-216-017-91	s	METAL, CHIP 47 5% 1/10W
R228	1-216-017-91	s	METAL, CHIP 47 5% 1/10W
R229-234	1-216-009-00	■	METAL, CHIP 22 5% 1/10W
R235	1-216-295-91	s	RES, CHIP 0
R238	1-216-049-91	s	METAL, CHIP 1k 5% 1/10W
R240	1-216-295-91	■	RES, CHIP 0
R241	1-216-017-91	s	METAL, CHIP 47 5% 1/10W
R242	1-216-017-91	s	METAL, CHIP 47 5% 1/10W
R243	1-216-057-00	s	METAL, CHIP 2.2k 5% 1/10W
R244	1-216-057-00	■	METAL, CHIP 2.2k 5% 1/10W
R245	1-216-057-00	■	METAL, CHIP 2.2k 5% 1/10W
R246	1-216-057-00	s	METAL, CHIP 2.2k 5% 1/10W
R248	1-216-057-00	■	METAL, CHIP 2.2k 5% 1/10W
R249-257	1-216-295-91	s	RES, CHIP 0
R262	1-216-057-00	s	METAL, CHIP 2.2k 5% 1/10W
R263	1-216-057-00	s	METAL, CHIP 2.2k 5% 1/10W
R264	1-216-295-91	s	RES, CHIP 0
R265	1-216-057-00	s	METAL, CHIP 2.2k 5% 1/10W
R266	1-216-057-00	■	METAL, CHIP 2.2k 5% 1/10W
R267	1-216-057-00	s	METAL, CHIP 2.2k 5% 1/10W
R268	1-216-057-00	s	METAL, CHIP 2.2k 5% 1/10W
R269	1-216-295-91	s	RES, CHIP 0
R300	1-216-017-91	■	METAL, CHIP 47 5% 1/10W
R301	1-216-049-91	s	METAL, CHIP 1k 5% 1/10W
R302	1-216-049-91	s	METAL, CHIP 1k 5% 1/10W
R303	1-216-017-91	s	METAL, CHIP 47 5% 1/10W
R305	1-216-045-00	s	METAL, CHIP 680 5% 1/10W
R306	1-208-775-11	s	METAL, CHIP 510 0.5% 1/10W
R307	1-216-041-00	s	METAL, CHIP 470 5% 1/10W
R308	1-216-017-91	s	METAL, CHIP 47 5% 1/10W
R309	1-216-057-00	■	METAL, CHIP 2.2k 5% 1/10W
R310	1-216-017-91	s	METAL, CHIP 47 5% 1/10W
R311	1-216-049-91	s	METAL, CHIP 1k 5% 1/10W
R312	1-216-639-11	s	METAL, CHIP 330 0.5% 1/10W
R313	1-216-639-11	s	METAL, CHIP 330 0.5% 1/10W
R314	1-216-295-91	s	RES, CHIP 0
R315	1-216-065-00	s	METAL, CHIP 4.7k 5% 1/10W
R316	1-216-017-91	■	METAL, CHIP 47 5% 1/10W
R317	1-216-641-11	■	METAL, CHIP 390 0.5% 1/10W
R318	1-216-647-11	s	METAL, CHIP 680 0.5% 1/10W
R319	1-216-651-11	s	METAL, CHIP 1k 0.5% 1/10W
R320	1-216-033-00	s	METAL, CHIP 220 5% 1/10W
R321	1-216-295-91	s	RES, CHIP 0
R322	1-216-041-00	s	METAL, CHIP 470 5% 1/10W
R323	1-216-043-91	s	METAL, CHIP 560 5% 1/10W
R324	1-216-073-00	s	METAL, CHIP 10k 5% 1/10W
R325	1-216-049-91	s	METAL, CHIP 1k 5% 1/10W
R326	1-216-017-91	s	METAL, CHIP 47 5% 1/10W
R327	1-216-057-00	s	METAL, CHIP 2.2k 5% 1/10W
R328	1-216-017-91	s	METAL, CHIP 47 5% 1/10W
R329	1-216-049-91	s	METAL, CHIP 1k 5% 1/10W
R330	1-216-017-91	■	METAL, CHIP 47 5% 1/10W
R331	1-216-049-91	■	METAL, CHIP 1k 5% 1/10W
R332	1-216-639-11	s	METAL, CHIP 330 0.5% 1/10W
R333	1-216-073-00	s	METAL, CHIP 10k 5% 1/10W

(DA-95 BOARD(ES-7(UC/J)))

Ref. No. or Q'ty	Part No.	SP	Description
R334	1-216-041-00	s	METAL, CHIP 470 5% 1/10W
R335	1-216-049-91	s	METAL, CHIP 1k 5% 1/10W
R336	1-208-775-11	s	METAL, CHIP 510 0.5% 1/10W
R337	1-216-045-00	s	METAL, CHIP 680 5% 1/10W
R338	1-216-295-91	s	RES, CHIP 0
R339	1-216-639-11	s	METAL, CHIP 330 0.5% 1/10W
R340	1-216-065-00	s	METAL, CHIP 4.7k 5% 1/10W
R341	1-216-017-91	s	METAL, CHIP 47 [illegible] 1/10W
R342	1-216-635-11	s	METAL, CHIP 220 0.5% 1/10W
R343	1-216-647-11	s	METAL, CHIP 680 0.5% 1/10W
R344	1-216-651-11	s	METAL, CHIP 1k 0.5% 1/10W
R345	1-216-025-91	s	METAL, CHIP 100 5% 1/10W
R347	1-216-041-00	[illegible]	METAL, CHIP 470 5% 1/10W
R350	1-208-775-11	s	METAL, CHIP 510 0.5% 1/10W
R351	1-216-073-00	s	METAL, CHIP 10k 5% 1/10W
R352	1-216-049-91	s	METAL, CHIP 1k 5% 1/10W
R353	1-216-017-91	s	METAL, CHIP 47 5% 1/10W
R354	1-216-057-00	s	METAL, CHIP 2.2k 5% 1/10W
R355	1-216-017-91	s	METAL, CHIP 47 5% 1/10W
R356	1-216-049-91	[illegible]	METAL, CHIP 1k 5% 1/10W
R357	1-216-017-91	s	METAL, CHIP 47 5% 1/10W
R358	1-216-049-91	s	METAL, CHIP 1k 5% 1/10W
R359	1-216-639-11	s	METAL, CHIP 330 0.5% 1/10W
R360	1-216-073-00	[illegible]	METAL, CHIP 10k 5% 1/10W
R361	1-216-041-00	s	METAL, CHIP 470 5% 1/10W
R362	1-216-049-91	s	METAL, CHIP 1k 5% 1/10W
R363	1-208-775-11	s	METAL, CHIP 510 0.5% 1/10W
R364	1-216-045-00	s	METAL, CHIP 680 5% 1/10W
R365	1-216-295-91	s	RES, CHIP 0
R366	1-216-639-11	s	METAL, CHIP 330 0.5% 1/10W
R367	1-216-065-00	s	METAL, CHIP 4.7k 5% 1/10W
R368	1-216-017-91	s	METAL, CHIP 47 5% 1/10W
R369	1-216-635-11	s	METAL, CHIP 220 0.5% 1/10W
R370	1-216-647-11	s	METAL, CHIP 680 0.5% 1/10W
R371	1-216-651-11	[illegible]	METAL, CHIP 1k 0.5% 1/10W
R372	1-216-025-91	s	METAL, CHIP 100 [illegible] 1/10W
R374	1-216-041-00	s	METAL, CHIP 470 5% 1/10W
R377	1-208-775-11	s	METAL, CHIP 510 0.5% 1/10W
R378	1-216-073-00	[illegible]	METAL, CHIP 10k 5% 1/10W
R379	1-216-049-91	s	METAL, CHIP 1k 5% 1/10W
R382	1-216-295-91	[illegible]	RES, CHIP 0
R383	1-216-025-91	s	METAL, CHIP 100 5% 1/10W
R400	1-216-017-91	s	METAL, CHIP 47 5% 1/10W
R401	1-216-057-00	s	METAL, CHIP 2.2k 5% 1/10W
R402	1-216-017-91	s	METAL, CHIP 47 5% 1/10W
R403	1-216-045-00	[illegible]	METAL, CHIP 680 [illegible] 1/10W
R404	1-216-025-91	s	METAL, CHIP 100 5% 1/10W
R405	1-216-057-00	s	METAL, CHIP 2.2k 5% 1/10W
R406	1-216-049-91	s	METAL, CHIP 1k 5% 1/10W
R407	1-219-369-11	s	METAL, CHIP 1.4k 0.1% 1/10W
R408	1-219-370-11	s	METAL, CHIP 2.91k 0.1% 1/10W
R409	1-216-081-00	[illegible]	METAL, CHIP 22k [illegible] 1/10W
R410	1-216-049-91	s	METAL, CHIP 1k 5% 1/10W
R411	1-216-017-91	s	METAL, CHIP 47 5% 1/10W
R412	1-216-041-00	s	METAL, CHIP 470 5% 1/10W
R413	1-216-033-00	s	METAL, CHIP 220 5% 1/10W
R414	1-216-051-00	s	METAL, CHIP 1.2k 5% 1/10W
R415	1-216-041-00	s	METAL, CHIP 470 5% 1/10W
R416	1-216-057-00	s	METAL, CHIP 2.2k 5% 1/10W

(DA-95 BOARD(ES-7(UC/J)))

Ref. No. or Q'ty	Part No.	SP	Description
R417	1-216-033-00	s	METAL, CHIP 220 5% 1/10W
R419	1-216-053-00	s	METAL, CHIP 1.5k 5% 1/10W
R422	1-216-049-91	s	METAL, CHIP 1k [illegible] 1/10W
R423	1-216-049-91	s	METAL, CHIP 1k 5% 1/10W
R424	1-216-009-00	s	METAL, CHIP 22 5% 1/10W
R425	1-216-051-00	s	METAL, CHIP 1.2k 5% 1/10W
R426	1-216-049-91	s	METAL, CHIP 1k [illegible] 1/10W
R427	1-216-049-91	[illegible]	METAL, CHIP 1k [illegible] 1/10W
R428	1-216-065-00	s	METAL, CHIP 4.7k 5% 1/10W
R429	1-216-079-00	s	METAL, CHIP 18k [illegible] 1/10W
R430	1-216-017-91	[illegible]	METAL, CHIP 47 5% 1/10W
R431	1-216-049-91	[illegible]	METAL, CHIP 1k 5% 1/10W
R432	1-216-049-91	[illegible]	METAL, CHIP 1k 5% 1/10W
R433	1-216-033-00	s	METAL, CHIP 220 5% 1/10W
R434	1-216-049-91	s	METAL, CHIP 1k 5% 1/10W
R435	1-216-065-00	s	METAL, CHIP 4.7k 5% 1/10W
R436	1-216-631-11	s	METAL, CHIP 150 0.5% 1/10W
R437	1-216-057-00	s	METAL, CHIP 2.2k 5% 1/10W
R440	1-216-049-91	s	METAL, CHIP 1k 5% 1/10W
R441	1-216-049-91	s	METAL, CHIP 1k 5% 1/10W
R442	1-216-017-91	s	METAL, CHIP 47 [illegible] 1/10W
R443	1-216-049-91	s	METAL, CHIP 1k 5% 1/10W
R444	1-216-049-91	s	METAL, CHIP 1k [illegible] 1/10W
R445	1-216-033-00	[illegible]	METAL, CHIP 220 [illegible] 1/10W
R446	1-216-049-91	s	METAL, CHIP 1k 5% 1/10W
R447	1-216-073-00	s	METAL, CHIP 10k 5% 1/10W
R448	1-216-057-00	[illegible]	METAL, CHIP 2.2k [illegible] 1/10W
R449	1-216-049-91	s	METAL, CHIP 1k 5% 1/10W
R450	1-216-025-91	s	METAL, CHIP 100 [illegible] 1/10W
R451	1-216-025-91	s	METAL, CHIP 100 [illegible] 1/10W
R453	1-216-631-11	s	METAL, CHIP 150 0.5% 1/10W
R454	1-216-631-11	s	METAL, CHIP 150 0.5% 1/10W
R455	1-216-025-91	s	METAL, CHIP 100 5% 1/10W
R457	1-216-631-11	s	METAL, CHIP 150 0.5% 1/10W
R458	1-216-631-11	s	METAL, CHIP 150 0.5% 1/10W
R459	1-216-017-91	s	METAL, CHIP 47 [illegible] 1/10W
R460	1-216-057-00	s	METAL, CHIP 2.2k 5% 1/10W
R461	1-216-017-91	s	METAL, CHIP 47 5% 1/10W
R462	1-216-045-00	s	METAL, CHIP 680 5% 1/10W
R463	1-216-057-00	[illegible]	METAL, CHIP 2.2k 5% 1/10W
R464	1-216-049-91	s	METAL, CHIP 1k [illegible] 1/10W
R465	1-218-177-11	s	METAL, CHIP 1001 0.1% 1/16W
R466	1-219-368-11	s	METAL, CHIP 713.4 0.1% 1/10W
R467	1-216-017-91	s	METAL, CHIP 47 5% 1/10W
R468	1-216-041-00	s	METAL, CHIP 470 [illegible] 1/10W
R469	1-216-041-00	[illegible]	METAL, CHIP 470 5% 1/10W
R470	1-216-057-00	s	METAL, CHIP 2.2k [illegible] 1/10W
R471	1-216-041-00	s	METAL, CHIP 470 5% 1/10W
R472	1-216-057-00	s	METAL, CHIP 2.2k 5% 1/10W
R473	1-216-033-00	s	METAL, CHIP 220 5% 1/10W
R475	1-216-053-00	s	METAL, CHIP 1.5k 5% 1/10W
R478	1-216-049-91	s	METAL, CHIP 1k 5% 1/10W
R479	1-216-049-91	s	METAL, CHIP 1k 5% 1/10W
R480	1-216-009-00	s	METAL, CHIP 22 [illegible] 1/10W
R481	1-216-051-00	s	METAL, CHIP 1.2k 5% 1/10W
R482	1-216-049-91	s	METAL, CHIP 1k 5% 1/10W
R484	1-216-025-91	s	METAL, CHIP 100 [illegible] 1/10W
R485	1-216-025-91	s	METAL, CHIP 100 5% 1/10W
R487	1-216-037-00	[illegible]	METAL, CHIP 330 5% 1/10W

(DA-95 BOARD(ES-7(UC/J)))

Ref. No. or Q'ty	Part No.	SP	Description
R490	1-216-631-11	s	METAL, CHIP 150 0.5% 1/10W
R491	1-216-631-11	s	METAL, CHIP 150 0.5% 1/10W
R494	1-216-025-91	s	METAL, CHIP 100 5% 1/10W
R496	1-216-631-11	s	METAL, CHIP 150 0.5% 1/10W
R497	1-216-631-11	■	METAL, CHIP 150 0.5% 1/10W
R498	1-216-017-91	s	METAL, CHIP 47 5% 1/10W
R499	1-216-057-00	s	METAL, CHIP 2.2k 5% 1/10W
R500	1-216-017-91	s	METAL, CHIP 47 5% 1/10W
R501	1-216-045-00	s	METAL, CHIP 680 5% 1/10W
R502	1-218-177-11	s	METAL, CHIP 1001 0.1% 1/16W
R503	1-219-367-11	s	METAL, CHIP 564.3 0.1% 1/10W
R504	1-216-017-91	s	METAL, CHIP 47 5% 1/10W
R505	1-216-039-00	s	METAL, CHIP 390 5% 1/10W
R506	1-216-041-00	■	METAL, CHIP 470 5% 1/10W
R507	1-216-057-00	s	METAL, CHIP 2.2k 5% 1/10W
R508	1-216-039-00	s	METAL, CHIP 390 5% 1/10W
R509	1-216-057-00	s	METAL, CHIP 2.2k 5% 1/10W
R510	1-216-033-00	■	METAL, CHIP 220 5% 1/10W
R511	1-216-053-00	s	METAL, CHIP 1.5k 5% 1/10W
R515	1-216-049-91	s	METAL, CHIP 1k 5% 1/10W
R516	1-216-073-00	s	METAL, CHIP 10k ■ 1/10W
R517	1-216-049-91	s	METAL, CHIP 1k 5% 1/10W
R518	1-216-049-91	s	METAL, CHIP 1k 5% 1/10W
R519	1-216-009-00	s	METAL, CHIP 22 5% 1/10W
R520	1-216-051-00	s	METAL, CHIP 1.2k 5% 1/10W
R521	1-216-049-91	s	METAL, CHIP 1k 5% 1/10W
R523	1-216-025-91	s	METAL, CHIP 100 5% 1/10W
R524	1-216-025-91	s	METAL, CHIP 100 ■ 1/10W
R526	1-216-037-00	s	METAL, CHIP 330 5% 1/10W
R529	1-216-631-11	s	METAL, CHIP 150 0.5% 1/10W
R530	1-216-631-11	s	METAL, CHIP 150 0.5% 1/10W
R531	1-216-025-91	s	METAL, CHIP 100 5% 1/10W
R533	1-216-631-11	s	METAL, CHIP 150 0.5% 1/10W
R534	1-216-631-11	s	METAL, CHIP 150 0.5% 1/10W
R536	1-208-789-11	s	METAL, CHIP 2k 0.5% 1/10W
R537	1-216-651-11	s	METAL, CHIP 1k 0.5% 1/10W
R538	1-216-659-11	s	METAL, CHIP 2.2k 0.5% 1/10W
R539	1-216-635-11	■	METAL, CHIP 220 0.5% 1/10W
R540	1-216-659-11	■	METAL, CHIP 2.2k 0.5% 1/10W
R541	1-216-049-91	s	METAL, CHIP 1k 5% 1/10W
R542	1-216-049-91	s	METAL, CHIP 1k 5% 1/10W
R543	1-216-295-91	s	RES, CHIP 0
R544	1-216-639-11	s	METAL, CHIP 330 0.5% 1/10W
R545	1-216-057-00	s	METAL, CHIP 2.2k 5% 1/10W
R546	1-216-025-91	s	METAL, CHIP 100 5% 1/10W
R547	1-216-025-91	s	METAL, CHIP 100 5% 1/10W
R550	1-216-057-00	s	METAL, CHIP 2.2k 5% 1/10W
R551	1-216-033-00	s	METAL, CHIP 220 5% 1/10W
R553	1-216-049-91	s	METAL, CHIP 1k ■ 1/10W
R554	1-216-065-00	s	METAL, CHIP 4.7k 5% 1/10W
R555	1-216-049-91	s	METAL, CHIP 1k 5% 1/10W
R556	1-216-017-91	■	METAL, CHIP 47 5% 1/10W
R557	1-216-057-00	s	METAL, CHIP 2.2k ■ 1/10W
R558	1-216-017-91	s	METAL, CHIP 47 5% 1/10W
R559	1-216-057-00	s	METAL, CHIP 2.2k 5% 1/10W
R561	1-216-025-91	s	METAL, CHIP 100 5% 1/10W
R562	1-216-067-00	s	METAL, CHIP 5.6k 5% 1/10W
R563	1-216-049-91	s	METAL, CHIP 1k 5% 1/10W
R564	1-216-063-91	s	METAL, CHIP 3.9k 5% 1/10W

(DA-95 BOARD(ES-7(UC/J)))

Ref. No. or Q'ty	Part No.	SP	Description
R565	1-216-041-00	s	METAL, CHIP 470 5% 1/10W
R566	1-216-061-00	s	METAL, CHIP 3.3k 5% 1/10W
R567	1-216-057-00	s	METAL, CHIP 2.2k 5% 1/10W
R568	1-216-049-91	■	METAL, CHIP 1k 5% 1/10W
R569	1-216-067-00	s	METAL, CHIP 5.6k 5% 1/10W
R570	1-216-073-00	s	METAL, CHIP 10k 5% 1/10W
R571	1-216-057-00	■	METAL, CHIP 2.2k ■ 1/10W
R572	1-216-017-91	s	METAL, CHIP 47 5% 1/10W
R573	1-216-017-91	s	METAL, CHIP 47 5% 1/10W
R574	1-216-631-11	s	METAL, CHIP 150 0.5% 1/10W
R575	1-216-631-11	s	METAL, CHIP 150 0.5% 1/10W
R576	1-216-049-91	s	METAL, CHIP 1k 5% 1/10W
R577	1-216-067-00	s	METAL, CHIP 5.6k 5% 1/10W
R578	1-216-073-00	s	METAL, CHIP 10k 5% 1/10W
R579	1-216-057-00	■	METAL, CHIP 2.2k 5% 1/10W
R580	1-216-017-91	s	METAL, CHIP 47 5% 1/10W
R581	1-216-017-91	s	METAL, CHIP 47 ■ 1/10W
R582	1-216-631-11	s	METAL, CHIP 150 0.5% 1/10W
R583	1-216-631-11	s	METAL, CHIP 150 0.5% 1/10W
R584	1-216-049-91	s	METAL, CHIP 1k ■ 1/10W
R600	1-216-017-91	s	METAL, CHIP 47 5% 1/10W
R601	1-216-057-00	s	METAL, CHIP 2.2k 5% 1/10W
R602	1-216-017-91	s	METAL, CHIP 47 5% 1/10W
R603	1-216-650-11	■	METAL, CHIP 910 0.5% 1/10W
R604	1-216-049-91	■	METAL, CHIP 1k 5% 1/10W
R605	1-216-023-00	s	METAL, CHIP 82 5% 1/10W
R606	1-216-667-11	s	METAL, CHIP 4.7k 0.5% 1/10W
R610	1-216-667-11	s	METAL, CHIP 4.7k 0.5% 1/10W
R617	1-216-033-00	s	METAL, CHIP 220 5% 1/10W
R619	1-216-017-91	s	METAL, CHIP 47 ■ 1/10W
R621	1-216-647-91	s	METAL, CHIP 680 ■ 1/10W
R622	1-216-033-00	s	METAL, CHIP 220 ■ 1/10W
R623-628	1-216-631-11	s	METAL, CHIP 150 0.5% 1/10W
R629	1-216-047-91	s	METAL, CHIP 820 ■ 1/10W
R630	1-216-627-91	s	METAL, CHIP 100 5% 1/10W
R631	1-216-049-91	s	METAL, CHIP 1k 5% 1/10W
R632	1-216-057-00	s	METAL, CHIP 2.2k 5% 1/10W
R633	1-216-025-91	s	METAL, CHIP 100 ■ 1/10W
R634	1-216-650-11	s	METAL, CHIP 910 0.5% 1/10W
R635	1-216-021-00	s	METAL, CHIP 68 ■ 1/10W
R636	1-216-049-91	s	METAL, CHIP 1k 5% 1/10W
R637	1-216-073-00	s	METAL, CHIP 10k 5% 1/10W
R638	1-216-057-00	s	METAL, CHIP 2.2k 5% 1/10W
R639	1-216-650-11	s	METAL, CHIP 910 0.5% 1/10W
R640	1-216-021-00	s	METAL, CHIP ■ 5% 1/10W
R641	1-216-049-91	s	METAL, CHIP 1k 5% 1/10W
R642	1-216-017-91	s	METAL, CHIP 47 ■ 1/10W
R643	1-216-651-11	s	METAL, CHIP 1k 0.5% 1/10W
R644	1-216-049-91	s	METAL, CHIP 1k 5% 1/10W
R645	1-216-025-91	s	METAL, CHIP 100 5% 1/10W
R646	1-216-651-11	s	METAL, CHIP 1k 0.5% 1/10W
R647	1-216-651-11	■	METAL, CHIP 1k 0.5% 1/10W
R648	1-216-647-11	s	METAL, CHIP 680 0.5% 1/10W
R649	1-216-295-91	s	RES, CHIP 0
R650	1-216-651-11	s	METAL, CHIP 1k 0.5% 1/10W
R651	1-216-645-11	s	METAL, CHIP 560 0.5% 1/10W
R652	1-216-025-91	s	METAL, CHIP 100 5% 1/10W
R653	1-216-057-00	■	METAL, CHIP 2.2k 5% 1/10W
R654	1-216-057-00	■	METAL, CHIP 2.2k 5% 1/10W

(DA-95 BOARD(ES-7(UC/J)))

Ref. No. or Q'ty	Part No.	SP	Description
R656	1-216-295-91	s	RES, CHIP 0
R657	1-216-065-00	s	METAL, CHIP 4.7k 5% 1/10W
R658	1-216-053-00	s	METAL, CHIP 1.5k 5% 1/10W
R659	1-216-057-00	s	METAL, CHIP 2.2k 5% 1/10W
R660	1-216-025-91	s	METAL, CHIP 100 [illegible] 1/10W
R661	1-216-061-00	s	METAL, CHIP 3.3k 5% 1/10W
R662	1-216-029-00	s	METAL, CHIP 150 5% 1/10W
R663	1-216-057-00	s	METAL, CHIP 2.2k 5% 1/10W
R664	1-216-049-91	■	METAL, CHIP 1k [illegible] 1/10W
R665	1-216-009-00	■	METAL, CHIP 22 5% 1/10W
R666	1-216-089-91	s	METAL, CHIP 47k 5% 1/10W
R667	1-216-069-00	s	METAL, CHIP 6.8k 5% 1/10W
R668	1-216-069-00	s	METAL, CHIP 6.8k 5% 1/10W
R669	1-216-017-91	s	METAL, CHIP 47 5% 1/10W
R670	1-216-651-11	■	METAL, CHIP 1k 0.5% 1/10W
R671	1-216-049-91	s	METAL, CHIP 1k [illegible] 1/10W
R672	1-216-025-91	s	METAL, CHIP 100 5% 1/10W
R673	1-216-651-11	s	METAL, CHIP 1k 0.5% 1/10W
R674	1-216-651-11	s	METAL, CHIP 1k 0.5% 1/10W
R675	1-216-647-11	■	METAL, CHIP 680 0.5% 1/10W
R676	1-216-295-91	s	RES, CHIP 0
R677	1-216-651-11	■	METAL, CHIP 1k 0.5% 1/10W
R678	1-216-645-11	s	METAL, CHIP 560 0.5% 1/10W
R679	1-216-025-91	s	METAL, CHIP 100 5% 1/10W
R682	1-216-057-00	s	METAL, CHIP 2.2k 5% 1/10W
R683	1-208-784-11	s	METAL, CHIP 1.2k 0.5% 1/10W
R685	1-216-619-11	s	METAL, CHIP 47 0.5% 1/10W
R686	1-216-057-00	■	METAL, CHIP 2.2k 5% 1/10W
R687	1-216-061-00	s	METAL, CHIP 3.3k 5% 1/10W
R688	1-216-025-91	s	METAL, CHIP 100 5% 1/10W
R689	1-216-029-00	s	METAL, CHIP 150 5% 1/10W
R690	1-216-057-00	s	METAL, CHIP 2.2k 5% 1/10W
R691	1-216-049-91	s	METAL, CHIP 1k 5% 1/10W
R692	1-216-049-91	s	METAL, CHIP 1k 5% 1/10W
R693	1-216-009-00	s	METAL, CHIP 22 5% 1/10W
R694	1-216-699-11	s	METAL, CHIP 100k 0.5% 1/10W
R695	1-216-069-00	s	METAL, CHIP 6.8k 5% 1/10W
R696	1-216-069-00	s	METAL, CHIP 6.8k 5% 1/10W
R697	1-216-089-91	s	METAL, CHIP 47k 5% 1/10W
R698	1-216-067-00	s	METAL, CHIP 5.6k 5% 1/10W
R699	1-216-651-11	s	METAL, CHIP 1k 0.5% 1/10W
R700	1-216-295-91	s	RES, CHIP 0
R701	1-216-651-11	s	METAL, CHIP 1k 0.5% 1/10W
R702	1-208-775-11	s	METAL, CHIP 510 0.5% 1/10W
R703	1-216-057-00	s	METAL, CHIP 2.2k 5% 1/10W
R704	1-216-017-91	s	METAL, CHIP 47 [illegible] 1/10W
R705	1-216-613-91	s	METAL, CHIP 27 [illegible] 1/10W
R706	1-216-017-91	s	METAL, CHIP 47 5% 1/10W
R707	1-216-017-91	s	METAL, CHIP 47 5% 1/10W
R710	1-216-019-00	s	METAL, CHIP 56 5% 1/10W
R710	1-216-023-00	s	METAL, CHIP 82 5% 1/10W
R711	1-216-025-91	s	METAL, CHIP 100 5% 1/10W
R713	1-216-049-91	s	METAL, CHIP 1k 5% 1/10W
R714	1-216-073-00	s	METAL, CHIP 10k 5% 1/10W
R715	1-216-057-00	s	METAL, CHIP 2.2k 5% 1/10W
R716	1-216-025-91	s	METAL, CHIP 100 5% 1/10W
R717	1-216-049-91	s	METAL, CHIP 1k 5% 1/10W
R718	1-216-049-91	s	METAL, CHIP 1k 5% 1/10W
R719	1-216-650-11	s	METAL, CHIP 910 0.5% 1/10W

(DA-95 BOARD(ES-7(UC/J)))

Ref. No. or Q'ty	Part No.	SP	Description
R720	1-216-049-91	s	METAL, CHIP 1k 5% 1/10W
R721	1-216-651-11	s	METAL, CHIP 1k 0.5% 1/10W
R722	1-216-057-00	■	METAL, CHIP 2.2k 5% 1/10W
R723	1-216-651-11	s	METAL, CHIP 1k 0.5% 1/10W
R724	1-216-049-91	■	METAL, CHIP 1k 5% 1/10W
R725	1-216-295-91	s	RES, CHIP 0
R726	1-208-789-11	s	METAL, CHIP 2k 0.5% 1/10W
R728	1-216-051-00	s	METAL, CHIP 1.2k 5% 1/10W
R737	1-216-073-00	s	METAL, CHIP 10k [illegible] 1/10W
R738	1-216-057-00	s	METAL, CHIP 2.2k 5% 1/10W
R739	1-216-049-91	■	METAL, CHIP 1k [illegible] 1/10W
R740	1-216-033-00	■	METAL, CHIP 220 [illegible] 1/10W
R741	1-216-065-00	s	METAL, CHIP 4.7k 5% 1/10W
R742	1-216-073-00	s	METAL, CHIP 10k [illegible] 1/10W
R743	1-216-065-00	s	METAL, CHIP 4.7k 5% 1/10W
R744	1-216-065-00	s	METAL, CHIP 4.7k 5% 1/10W
R746	1-216-295-91	s	RES, CHIP 0
R747	1-216-295-91	■	RES, CHIP 0
R748	1-216-295-91	s	RES, CHIP 0
R750	1-216-065-00	s	METAL, CHIP 4.7k 5% 1/10W
R751	1-216-065-00	■	METAL, CHIP 4.7k [illegible] 1/10W
R752	1-216-057-00	s	METAL, CHIP 2.2k 5% 1/10W
R753	1-216-073-00	s	METAL, CHIP 10k 5% 1/10W
R754	1-216-085-00	s	METAL, CHIP 33k 5% 1/10W
R755	1-216-081-00	s	METAL, CHIP 22k 5% 1/10W
R756	1-216-049-91	s	METAL, CHIP 1k 5% 1/10W
R757	1-216-073-00	s	METAL, CHIP 10k 5% 1/10W
R758	1-216-025-91	s	METAL, CHIP 100 [illegible] 1/10W
R759	1-216-057-00	s	METAL, CHIP 2.2k 5% 1/10W
R760	1-216-049-91	s	METAL, CHIP 1k 5% 1/10W
R761	1-216-073-00	s	METAL, CHIP 10k 5% 1/10W
R762	1-216-073-00	s	METAL, CHIP 10k 5% 1/10W
R763	1-216-073-00	s	METAL, CHIP 10k 5% 1/10W
R764	1-216-049-91	s	METAL, CHIP 1k 5% 1/10W
R765	1-216-049-91	s	METAL, CHIP 1k 5% 1/10W
R766	1-216-065-00	■	METAL, CHIP 4.7k 5% 1/10W
R767	1-216-057-00	s	METAL, CHIP 2.2k 5% 1/10W
R768	1-216-651-11	s	METAL, CHIP 1k 0.5% 1/10W
R769	1-216-295-91	■	RES, CHIP 0
R770	1-216-651-11	s	METAL, CHIP 1k 0.5% 1/10W
R771	1-216-057-00	■	METAL, CHIP 2.2k 5% 1/10W
R772	1-216-649-11	s	METAL, CHIP 820 0.5% 1/10W
R773	1-216-645-11	s	METAL, CHIP 560 0.5% 1/10W
R774	1-216-057-00	s	METAL, CHIP 2.2k 5% 1/10W
R775	1-216-049-91	s	METAL, CHIP 1k 5% 1/10W
R776	1-216-057-00	■	METAL, CHIP 2.2k 5% 1/10W
R779	1-216-057-00	s	METAL, CHIP 2.2k [illegible] 1/10W
R780-785	1-216-025-91	s	METAL, CHIP 100 [illegible] 1/10W
R786	1-216-057-00	■	METAL, CHIP 2.2k [illegible] 1/10W
R787	1-216-065-00	s	METAL, CHIP 4.7k 5% 1/10W
R788	1-216-295-91	s	RES, CHIP 0
R789	1-216-057-00	■	METAL, CHIP 2.2k 5% 1/10W
R790	1-216-057-00	s	METAL, CHIP 2.2k 5% 1/10W
R791	1-216-652-11	s	METAL, CHIP 1.1k 0.5% 1/10W
R792	1-216-057-00	s	METAL, CHIP 2.2k [illegible] 1/10W
R793	1-216-053-00	s	METAL, CHIP 1.5k 5% 1/10W
R794	1-216-069-00	s	METAL, CHIP 6.8k 5% 1/10W
R796	1-216-033-00	s	METAL, CHIP 220 5% 1/10W
R797	1-216-049-91	■	METAL, CHIP 1k [illegible] 1/10W

(DA-95 BOARD(ES-7(UC/J)))

Ref. No. or Q'ty	Part No.	SP	Description
R798	1-216-045-00	s	METAL, CHIP 680 5% 1/10W
R799	1-216-049-91	■	METAL, CHIP 1k 5% 1/10W
R800	1-216-057-00	s	METAL, CHIP 2.2k 5% 1/10W
R801	1-216-049-91	s	METAL, CHIP 1k ■ 1/10W
R802	1-216-049-91	s	METAL, CHIP 1k 5% 1/10W
R803	1-216-651-11	■	METAL, CHIP 1k 0.5% 1/10W
R804	1-216-295-91	■	RES, CHIP 0
R805	1-216-049-91	s	METAL, CHIP 1k 5% 1/10W
R807	1-208-784-11	s	METAL, CHIP 1.2k 0.5% 1/10W
R808	1-216-049-91	s	METAL, CHIP 1k 5% 1/10W
R810	1-216-025-91	s	METAL, CHIP 100 5% 1/10W
R811	1-216-049-91	s	METAL, CHIP 1k 5% 1/10W
R815	1-216-049-91	s	METAL, CHIP 1k 5% 1/10W
R817	1-216-049-91	■	METAL, CHIP 1k 5% 1/10W
R818	1-216-049-91	s	METAL, CHIP 1k 5% 1/10W
R819	1-216-009-00	s	METAL, CHIP 22 ■ 1/10W
R820	1-208-822-11	s	METAL, CHIP 47k 0.5% 1/10W
R827	1-216-049-91	■	METAL, CHIP 1k 5% 1/10W
R829	1-216-089-91	s	METAL, CHIP 47k 5% 1/10W
R830	1-216-009-00	s	METAL, CHIP 22 5% 1/10W
R831	1-216-089-91	s	METAL, CHIP 47k 5% 1/10W
R832	1-216-067-00	s	METAL, CHIP 5.6k 5% 1/10W
R833	1-216-651-11	s	METAL, CHIP 1k 0.5% 1/10W
R834	1-216-651-11	s	METAL, CHIP 1k 0.5% 1/10W
R835	1-216-295-91	■	RES, CHIP 0
R836	1-216-057-00	s	METAL, CHIP 2.2k 5% 1/10W
R837	1-216-033-00	s	METAL, CHIP 220 ■ 1/10W
R838	1-216-073-00	s	METAL, CHIP 10k 5% 1/10W
R839	1-216-065-00	s	METAL, CHIP 4.7k 5% 1/10W
R840	1-216-295-91	s	RES, CHIP 0
R841	1-216-295-91	s	RES, CHIP 0
R844	1-216-065-00	s	METAL, CHIP 4.7k 5% 1/10W
R846	1-216-065-00	s	METAL, CHIP 4.7k 5% 1/10W
R847	1-216-065-00	s	METAL, CHIP 4.7k 5% 1/10W
R848	1-216-065-00	s	METAL, CHIP 4.7k 5% 1/10W
R849	1-216-057-00	s	METAL, CHIP 2.2k 5% 1/10W
R850	1-216-073-00	■	METAL, CHIP 10k 5% 1/10W
R851	1-216-085-00	s	METAL, CHIP 33k 5% 1/10W
R852	1-216-081-00	s	METAL, CHIP 22k 5% 1/10W
R853	1-216-049-91	s	METAL, CHIP 1k 5% 1/10W
R854	1-216-073-00	■	METAL, CHIP 10k 5% 1/10W
R855	1-216-025-91	s	METAL, CHIP 100 5% 1/10W
R856	1-216-057-00	■	METAL, CHIP 2.2k 5% 1/10W
R857	1-216-049-91	s	METAL, CHIP 1k 5% 1/10W
R858	1-216-073-00	s	METAL, CHIP 10k 5% 1/10W
R859	1-216-073-00	s	METAL, CHIP 10k 5% 1/10W
R860	1-216-073-00	s	METAL, CHIP 10k 5% 1/10W
R861	1-216-049-91	s	METAL, CHIP 1k 5% 1/10W
R862	1-216-049-91	s	METAL, CHIP 1k ■ 1/10W
R863	1-216-065-00	s	METAL, CHIP 4.7k 5% 1/10W
R864	1-216-057-00	s	METAL, CHIP 2.2k 5% 1/10W
R865	1-216-651-11	s	METAL, CHIP 1k 0.5% 1/10W
R866	1-216-651-11	s	METAL, CHIP 1k 0.5% 1/10W
R867	1-216-295-91	s	RES, CHIP 0
R868	1-216-057-00	s	METAL, CHIP 2.2k 5% 1/10W
R869	1-216-047-91	s	METAL, CHIP 820 ■ 1/10W
R870	1-216-043-91	s	METAL, CHIP 560 5% 1/10W
R871	1-216-057-00	s	METAL, CHIP 2.2k 5% 1/10W
R872	1-216-057-00	s	METAL, CHIP 2.2k ■ 1/10W

(DA-95 BOARD(ES-7(UC/J)))

Ref. No. or Q'ty	Part No.	SP	Description
R873	1-216-049-91	s	METAL, CHIP 1k 5% 1/10W
R874	1-216-055-00	s	METAL, CHIP 1.8k 5% 1/10W
R875	1-216-634-11	s	METAL, CHIP 200 0.5% 1/10W
R876	1-216-057-00	s	METAL, CHIP 2.2k 5% 1/10W
R878	1-216-057-00	s	METAL, CHIP 2.2k 5% 1/10W
R879	1-216-049-91	s	METAL, CHIP 1k ■ 1/10W
R880	1-216-651-11	■	METAL, CHIP 1k 0.5% 1/10W
R881	1-216-651-11	s	METAL, CHIP 1k 0.5% 1/10W
R882	1-216-025-91	s	METAL, CHIP 100 5% 1/10W
R883	1-216-057-00	s	METAL, CHIP 2.2k ■ 1/10W
R885	1-216-047-91	s	METAL, CHIP 820 5% 1/10W
R886	1-216-049-91	■	METAL, CHIP 1k 5% 1/10W
R889	1-216-049-91	■	METAL, CHIP 1k 5% 1/10W
R890	1-216-057-00	s	METAL, CHIP 2.2k 5% 1/10W
R891	1-216-051-00	s	METAL, CHIP 1.2k 5% 1/10W
R892	1-208-774-11	s	METAL, CHIP 470 0.5% 1/10W
R893	1-216-651-11	■	METAL, CHIP 1k 0.5% 1/10W
R894	1-216-025-91	s	METAL, CHIP 100 5% 1/10W
R895	1-216-647-11	s	METAL, CHIP 680 0.5% 1/10W
R896	1-216-045-00	■	METAL, CHIP 680 5% 1/10W
R897	1-216-073-00	s	METAL, CHIP 10k 5% 1/10W
R898	1-216-631-11	s	METAL, CHIP 150 0.5% 1/10W
R899	1-216-631-11	s	METAL, CHIP 150 0.5% 1/10W
R900	1-216-049-91	s	METAL, CHIP 1k 5% 1/10W
R901	1-216-059-00	■	METAL, CHIP 2.7k 5% 1/10W
R902	1-216-057-00	s	METAL, CHIP 2.2k 5% 1/10W
R903	1-208-817-11	s	METAL, CHIP 30k 0.5% 1/10W
R904	1-216-073-00	s	METAL, CHIP 10k 5% 1/10W
R906	1-216-017-91	s	METAL, CHIP 47 ■ 1/10W
R907	1-216-017-91	■	METAL, CHIP 47 ■ 1/10W
R908-923	1-216-631-11	s	METAL, CHIP 150 0.5% 1/10W
RB102	1-239-426-11	s	RESISTOR BLOCK, CHIP 2.2kx4
RB300	1-239-426-11	s	RESISTOR BLOCK, CHIP 2.2kx4
RB301	1-239-426-11	■	RESISTOR BLOCK, CHIP 2.2kx4
RB302	1-239-426-11	s	RESISTOR BLOCK, CHIP 2.2kx4
RB303	1-239-426-11	s	RESISTOR BLOCK, CHIP 2.2kx4
RB902	1-239-426-11	s	RESISTOR BLOCK, CHIP 2.2kx4
RB903	1-239-426-11	■	RESISTOR BLOCK, CHIP 2.2kx4
RB906	1-239-426-11	s	RESISTOR BLOCK, CHIP 2.2kx4
RB907	1-239-426-11	s	RESISTOR BLOCK, CHIP 2.2kx4
RV100	1-237-500-21	s	RES, ADJ, METAL 1k
RV101	1-241-760-11	s	RES, ADJ, METAL 470
RV300	1-241-761-11	s	RES, ADJ, METAL 1k
RV301	1-241-759-21	■	RES, ADJ, METAL 220
RV302	1-241-761-11	s	RES, ADJ, METAL 1k
RV303	1-241-759-21	s	RES, ADJ, METAL 220
RV401	1-241-759-21	s	RES, ADJ, METAL 220
RV402	1-241-759-21	s	RES, ADJ, METAL 220
RV403	1-241-759-21	s	RES, ADJ, METAL 220
RV404	1-241-758-11	■	RES, ADJ, METAL 100
RV405	1-241-760-11	s	RES, ADJ, METAL 470
RV406	1-241-758-11	s	RES, ADJ, METAL 100
RV409	1-241-760-11	s	RES, ADJ, METAL 470
RV410	1-241-760-11	s	RES, ADJ, METAL 470
RV604	1-241-760-11	s	RES, ADJ, METAL 470
RV605	1-241-763-11	s	RES, ADJ, METAL 4.7k
RV606	1-241-763-11	■	RES, ADJ, METAL 4.7k
RV607	1-241-759-21	s	RES, ADJ, METAL 220

(DA-95 BOARD(ES-7(UC/J)))

Ref. No. or Q'ty	Part No.	SP	Description
RV608	1-241-759-21	s	RES, ADJ, METAL 220
RV609	1-241-760-11	s	RES, ADJ, METAL 470
RV611	1-237-501-21	s	RES, ADJ, METAL 2k
RV612	1-241-762-11	s	RES, ADJ, METAL 2.2k
RV613	1-241-763-11	s	RES, ADJ, METAL 4.7k
RV800	1-241-760-11	s	RES, ADJ, METAL 470
RV804	1-237-501-21	s	RES, ADJ, METAL 2k
RV805	1-241-762-11	s	RES, ADJ, METAL 2.2k
RV807	1-241-760-11	s	RES, ADJ, METAL 470
S100	1-571-098-11	s	SWITCH, SLIDE
S101	1-553-925-00	s	SWITCH, DIGITAL
S102	1-553-925-00	s	SWITCH, DIGITAL
S103	1-553-925-00	s	SWITCH, DIGITAL
S600	1-554-399-00	s	SWITCH, TOGGLE
S601	1-570-373-12	s	SWITCH, SLIDE
S801	1-570-373-12	s	SWITCH, SLIDE
X100	1-760-267-11	■	VCO, CRYSTAL 14.31818MHz
X101	1-760-267-11	s	VCO, CRYSTAL 14.31818MHz
X102	1-760-275-11	s	VCO, CRYSTAL 27.00MHz
X600	1-579-994-12	s	CRYSTAL 14.31818MHz

DA-95A BOARD(ES-7(CE))

Ref. No. or Q'ty	Part No.	SP	Description
1pc	A-3273-953-A	o	MOUNTED CIRCUIT BOARD, DA-95A
1pc	1-163-038-91	s	CERAMIC, CHIP 0.1uF 25V
1pc	3-172-089-01	o	HANDLE
1pc	7-621-770-87	s	SCREW +B 2.6x5
1pc	7-682-546-04	s	SCREW +B 3x5
1pc	7-682-947-01	■	SCREW +PSW 3x6
1pc	7-682-948-01	■	SCREW +PSW 3x8
1pc	7-685-145-11	s	SCREW +P 3x6 TYPE2 NON-SLIT
5pcs	3-146-822-21	o	SPACER
5pcs	7-682-545-04	s	SCREW +B 3x4
1pc	7-621-773-87	s	SCREW +B 2.6x10
1pc	7-622-207-05	s	■ 2.6, TYPE 2
C100	1-163-038-91	■	CERAMIC, CHIP 0.1uF 25V
C101	1-124-589-11	s	ELECT 47uF 20% 16V
C102	1-124-589-11	■	ELECT 47uF 20% 16V
C103	1-124-234-00	s	ELECT 22uF 20% 16V
C104	1-163-038-91	s	CERAMIC, CHIP 0.1uF 25V
C105	1-163-038-91	s	CERAMIC, CHIP 0.1uF 25V
C106	1-124-234-00	■	ELECT 22uF 20% 16V
C107	1-163-251-11	s	CERAMIC, CHIP 100pF ■ 50V
C108	1-163-251-11	s	CERAMIC, CHIP 100pF 5% 50V
C109	1-163-038-91	s	CERAMIC, CHIP 0.1uF 25V
C110	1-163-038-91	s	CERAMIC, CHIP 0.1uF 25V
C111	1-163-231-11	s	CERAMIC, CHIP 15pF 5% 50V
C112	1-163-038-91	s	CERAMIC, CHIP 0.1uF 25V
C113	1-163-038-91	s	CERAMIC, CHIP 0.1uF 25V
C114	1-164-232-11	s	CERAMIC, CHIP 0.01uF 10% 100V
C115	1-124-261-00	s	ELECT 10uF 20% 50V
C116	1-163-038-91	s	CERAMIC, CHIP 0.1uF 25V
C117	1-124-589-11	■	ELECT 47uF 20% 16V
C118	1-163-038-91	s	CERAMIC, CHIP 0.1uF 25V
C119	1-126-163-11	s	ELECT 4.7uF 20% 50V
C120	1-163-038-91	s	CERAMIC, CHIP 0.1uF 25V
C121	1-164-232-11	s	CERAMIC, CHIP 0.01uF 10% 100V
C122	1-124-261-00	s	ELECT 10uF 20% 50V
C123	1-124-234-00	s	ELECT 22uF 20% 16V
C124	1-163-038-91	■	CERAMIC, CHIP 0.1uF 25V
C125	1-163-038-91	■	CERAMIC, CHIP 0.1uF 25V
C126	1-163-038-91	■	CERAMIC, CHIP 0.1uF 25V
C127	1-126-163-11	s	ELECT 4.7uF 20% 50V
C128	1-163-037-11	s	CERAMIC, CHIP 0.022uF 10% 25V
C129	1-163-125-00	s	CERAMIC, CHIP 220pF 5% 50V
C130	1-163-038-91	s	CERAMIC, CHIP 0.1uF 25V
C131	1-126-163-11	s	ELECT 4.7uF 20% 50V
C132	1-163-038-91	s	CERAMIC, CHIP 0.1uF 25V
C133	1-163-038-91	s	CERAMIC, CHIP 0.1uF 25V
C134	1-124-589-11	s	ELECT 47uF 20% 16V
C135	1-163-038-91	■	CERAMIC, CHIP 0.1uF 25V
C136	1-164-232-11	s	CERAMIC, CHIP 0.01uF 10% 100V
C137	1-163-038-91	s	CERAMIC, CHIP 0.1uF 25V
C138	1-126-163-11	s	ELECT 4.7uF 20% 50V
C139	1-163-038-91	s	CERAMIC, CHIP 0.1uF 25V
C141	1-107-714-11	s	ELECT 10uF 20% 16V
C142	1-163-038-91	s	CERAMIC, CHIP 0.1uF 25V
C143	1-124-261-00	s	ELECT 10uF 20% 50V
C144	1-163-235-11	s	CERAMIC, CHIP 22pF 5% 50V
C145	1-163-038-91	s	CERAMIC, CHIP 0.1uF 25V
C146	1-124-257-00	■	ELECT 2.2uF 20% 50V

(DA-95A BOARD(ES-7(CE)))

Ref. No. or Q'ty	Part No.	SP	Description
C147	1-163-275-11	s	CERAMIC, CHIP 0.001uF 5% 50V
C148	1-124-261-00	s	ELECT 10uF 20% 50V
C149	1-124-261-00	s	ELECT 10uF 20% 50V
C150	1-163-038-91	s	CERAMIC, CHIP 0.1uF 25V
C151	1-163-038-91	s	CERAMIC, CHIP 0.1uF 25V
C152	1-124-589-11	s	ELECT 47uF 20% 16V
C153	1-163-038-91	s	CERAMIC, CHIP 0.1uF 25V
C154	1-124-589-11	■	ELECT 47uF 20% 16V
C155	1-163-037-11	s	CERAMIC, CHIP 0.022uF 10% 25V
C156	1-163-037-11	s	CERAMIC, CHIP 0.022uF 10% 25V
C157	1-163-038-91	s	CERAMIC, CHIP 0.1uF 25V
C158	1-124-589-11	s	ELECT 47uF 20% 16V
C159	1-163-038-91	s	CERAMIC, CHIP 0.1uF 25V
C160	1-163-243-11	s	CERAMIC, CHIP 47pF 5% 50V
C161	1-163-038-91	s	CERAMIC, CHIP 0.1uF 25V
C162	1-163-038-91	s	CERAMIC, CHIP 0.1uF 25V
C163	1-163-038-91	s	CERAMIC, CHIP 0.1uF 25V
C164	1-124-589-11	s	ELECT 47uF 20% 16V
C165	1-163-038-91	s	CERAMIC, CHIP 0.1uF 25V
C166	1-163-243-11	s	CERAMIC, CHIP 47pF 5% 50V
C167	1-163-038-91	s	CERAMIC, CHIP 0.1uF 25V
C168	1-163-038-91	s	CERAMIC, CHIP 0.1uF 25V
C169	1-163-251-11	s	CERAMIC, CHIP 100pF 5% 50V
C170	1-163-251-11	s	CERAMIC, CHIP 100pF 5% 50V
C171	1-163-227-11	s	CERAMIC, CHIP 10pF 5% 50V
C172	1-163-263-11	■	CERAMIC, CHIP 330pF 5% 50V
C173	1-163-227-11	s	CERAMIC, CHIP 10pF 5% 50V
C174	1-163-231-11	s	CERAMIC, CHIP 15pF 5% 50V
C175	1-163-227-11	s	CERAMIC, CHIP 10pF 5% 50V
C177	1-163-251-11	■	CERAMIC, CHIP 100pF 5% 50V
C178	1-163-220-11	s	CERAMIC, CHIP 3pF 50V
C179	1-126-163-11	s	ELECT 4.7uF 20% 50V
C180	1-163-037-11	s	CERAMIC, CHIP 0.022uF 10% 25V
C181	1-163-037-11	■	CERAMIC, CHIP 0.022uF 10% 25V
C182	1-163-251-11	s	CERAMIC, CHIP 100pF 5% 50V
C183	1-163-038-91	■	CERAMIC, CHIP 0.1uF 25V
C184	1-163-235-11	s	CERAMIC, CHIP 22pF 5% 50V
C185	1-163-275-11	s	CERAMIC, CHIP 0.001uF 5% 50V
C186	1-163-038-91	s	CERAMIC, CHIP 0.1uF 25V
C187	1-163-251-11	s	CERAMIC, CHIP 100pF 5% 50V
C188	1-163-038-91	s	CERAMIC, CHIP 0.1uF 25V
C189	1-124-234-00	■	ELECT 22uF 20% 16V
C190	1-163-038-91	s	CERAMIC, CHIP 0.1uF 25V
C191	1-163-038-91	s	CERAMIC, CHIP 0.1uF 25V
C192	1-124-234-00	s	ELECT 22uF 20% 16V
C193	1-163-038-91	s	CERAMIC, CHIP 0.1uF 25V
C194	1-163-038-91	s	CERAMIC, CHIP 0.1uF 25V
C195	1-164-232-11	s	CERAMIC, CHIP 0.01uF 10% 100V
C196	1-124-234-00	s	ELECT 22uF 20% 16V
C197	1-163-275-11	s	CERAMIC, CHIP 0.001uF 5% 50V
C198	1-163-038-91	s	CERAMIC, CHIP 0.1uF 25V
C199	1-163-037-11	s	CERAMIC, CHIP 0.022uF 10% 25V
C200	1-163-037-11	s	CERAMIC, CHIP 0.022uF 10% 25V
C201	1-126-163-11	s	ELECT 4.7uF 20% 50V
C202	1-163-037-11	s	CERAMIC, CHIP 0.022uF 10% 25V
C203	1-163-038-91	s	CERAMIC, CHIP 0.1uF 25V
C204	1-163-038-91	s	CERAMIC, CHIP 0.1uF 25V
C205	1-163-038-91	s	CERAMIC, CHIP 0.1uF 25V
C206	1-163-037-11	s	CERAMIC, CHIP 0.022uF 10% 25V

(DA-95A BOARD(ES-7(CE)))

Ref. No. or Q'ty	Part No.	SP	Description
C207	1-126-163-11	s	ELECT 4.7uF 20% 50V
C208	1-163-037-11	s	CERAMIC, CHIP 0.022uF 10% 25V
C209	1-163-038-91	■	CERAMIC, CHIP 0.1uF 25V
C210	1-163-038-91	s	CERAMIC, CHIP 0.1uF 25V
C211	1-163-038-91	s	CERAMIC, CHIP 0.1uF 25V
C212	1-163-037-11	s	CERAMIC, CHIP 0.022uF 10% 25V
C213-218	1-163-038-91	s	CERAMIC, CHIP 0.1uF 25V
C219	1-163-037-11	s	CERAMIC, CHIP 0.022uF 10% 25V
C220	1-163-037-11	■	CERAMIC, CHIP 0.022uF 10% 25V
C221	1-126-163-11	s	ELECT 4.7uF 20% 50V
C222	1-163-037-11	s	CERAMIC, CHIP 0.022uF 10% 25V
C223	1-163-038-91	s	CERAMIC, CHIP 0.1uF 25V
C224	1-124-589-11	s	ELECT 47uF 20% 16V
C225	1-163-038-91	■	CERAMIC, CHIP 0.1uF 25V
C226	1-163-038-91	s	CERAMIC, CHIP 0.1uF 25V
C227	1-163-038-91	s	CERAMIC, CHIP 0.1uF 25V
C228	1-164-232-11	s	CERAMIC, CHIP 0.01uF 10% 100V
C229	1-164-232-11	■	CERAMIC, CHIP 0.01uF 10% 100V
C230-239	1-163-038-91	s	CERAMIC, CHIP 0.1uF 25V
C300-311	1-163-038-91	■	CERAMIC, CHIP 0.1uF 25V
C312	1-163-251-11	■	CERAMIC, CHIP 100pF 5% 50V
C313	1-163-251-11	s	CERAMIC, CHIP 100pF 5% 50V
C314	1-163-038-91	■	CERAMIC, CHIP 0.1uF 25V
C315	1-124-589-11	s	ELECT 47uF 20% 16V
C316	1-163-038-91	s	CERAMIC, CHIP 0.1uF 25V
C317	1-124-589-11	s	ELECT 47uF 20% 16V
C318	1-163-038-91	s	CERAMIC, CHIP 0.1uF 25V
C319	1-163-038-91	s	CERAMIC, CHIP 0.1uF 25V
C320	1-124-589-11	s	ELECT 47uF 20% 16V
C321-325	1-163-038-91	s	CERAMIC, CHIP 0.1uF 25V
C326	1-163-241-11	s	CERAMIC, CHIP 39pF 5% 50V
C327	1-163-038-91	■	CERAMIC, CHIP 0.1uF 25V
C328	1-163-243-11	s	CERAMIC, CHIP 47pF 5% 50V
C329	1-163-235-11	s	CERAMIC, CHIP 22pF [illegible] 50V
C330	1-163-038-91	■	CERAMIC, CHIP 0.1uF 25V
C331	1-124-261-00	s	ELECT 10uF 20% 50V
C332	1-163-038-91	s	CERAMIC, CHIP 0.1uF 25V
C333	1-163-038-91	■	CERAMIC, CHIP 0.1uF 25V
C334	1-163-038-91	s	CERAMIC, CHIP 0.1uF 25V
C335	1-163-038-91	s	CERAMIC, CHIP 0.1uF 25V
C336	1-124-589-11	s	ELECT 47uF 20% 16V
C337	1-124-589-11	s	ELECT 47uF 20% 16V
C338	1-163-038-91	s	CERAMIC, CHIP 0.1uF 25V
C339	1-163-038-91	s	CERAMIC, CHIP 0.1uF 25V
C340	1-163-038-91	s	CERAMIC, CHIP 0.1uF 25V
C341	1-163-038-91	s	CERAMIC, CHIP 0.1uF 25V
C342	1-163-239-11	s	CERAMIC, CHIP 33pF [illegible] 50V
C343	1-163-243-11	s	CERAMIC, CHIP 47pF [illegible] 50V
C344	1-163-243-11	s	CERAMIC, CHIP 47pF [illegible] 50V
C345	1-163-038-91	s	CERAMIC, CHIP 0.1uF 25V
C346	1-163-038-91	s	CERAMIC, CHIP 0.1uF 25V
C347	1-163-235-11	s	CERAMIC, CHIP 22pF 5% 50V
C348	1-163-235-11	s	CERAMIC, CHIP 22pF 5% 50V
C349	1-163-038-91	s	CERAMIC, CHIP 0.1uF 25V
C350	1-124-261-00	■	ELECT 10uF 20% 50V
C351	1-163-038-91	s	CERAMIC, CHIP 0.1uF 25V
C352	1-163-038-91	s	CERAMIC, CHIP 0.1uF 25V
C353	1-163-038-91	s	CERAMIC, CHIP 0.1uF 25V
C354	1-163-038-91	s	CERAMIC, CHIP 0.1uF 25V

(DA-95A BOARD(ES-7 (CE)))

Ref. No. or Q'ty	Part No.	SP	Description
C355	1-124-589-11	s	ELECT 47uF 20% 16V
C356	1-124-589-11	s	ELECT 47uF 20% 16V
C357	1-163-038-91	s	CERAMIC, CHIP 0.1uF 25V
C358	1-163-038-91	s	CERAMIC, CHIP 0.1uF 25V
C359	1-163-038-91	s	CERAMIC, CHIP 0.1uF 25V
C360	1-163-038-91	s	CERAMIC, CHIP 0.1uF 25V
C361	1-124-589-11	s	ELECT 47uF 20% 16V
C362	1-163-239-11	s	CERAMIC, CHIP 33pF 5% 50V
C363	1-163-243-11	s	CERAMIC, CHIP 47pF 5% 50V
C364	1-163-243-11	s	CERAMIC, CHIP 47pF 5% 50V
C365	1-163-038-91	s	CERAMIC, CHIP 0.1uF 25V
C366	1-163-038-91	■	CERAMIC, CHIP 0.1uF 25V
C367	1-163-235-11	s	CERAMIC, CHIP 22pF 5% 50V
C368	1-163-235-11	s	CERAMIC, CHIP 22pF 5% 50V
C369	1-163-038-91	s	CERAMIC, CHIP 0.1uF 25V
C370	1-124-261-00	s	ELECT 10uF 20% 50V
C371	1-163-038-91	s	CERAMIC, CHIP 0.1uF 25V
C372	1-163-038-91	s	CERAMIC, CHIP 0.1uF 25V
C373	1-163-038-91	■	CERAMIC, CHIP 0.1uF 25V
C374	1-163-038-91	s	CERAMIC, CHIP 0.1uF 25V
C375	1-124-589-11	s	ELECT 47uF 20% 16V
C376	1-124-589-11	s	ELECT 47uF 20% 16V
C377	1-163-038-91	s	CERAMIC, CHIP 0.1uF 25V
C378	1-163-038-91	s	CERAMIC, CHIP 0.1uF 25V
C379	1-163-038-91	s	CERAMIC, CHIP 0.1uF 25V
C380	1-163-125-00	s	CERAMIC, CHIP 220pF 5% 50V
C381	1-163-038-91	s	CERAMIC, CHIP 0.1uF 25V
C382	1-163-038-91	s	CERAMIC, CHIP 0.1uF 25V
C383	1-163-038-91	s	CERAMIC, CHIP 0.1uF 25V
C386	1-163-038-91	s	CERAMIC, CHIP 0.1uF 25V
C400	1-163-038-91	s	CERAMIC, CHIP 0.1uF 25V
C401	1-163-038-91	s	CERAMIC, CHIP 0.1uF 25V
C402	1-124-589-11	s	ELECT 47uF 20% 16V
C403	1-124-589-11	s	ELECT 47uF 20% 16V
C404-409	1-163-038-91	s	CERAMIC, CHIP 0.1uF 25V
C410	1-163-133-00	s	CERAMIC, CHIP 470pF 5% 50V
C411	1-126-160-11	s	ELECT 1uF 20% 50V
C412	1-163-038-91	s	CERAMIC, CHIP 0.1uF 25V
C413	1-163-038-91	s	CERAMIC, CHIP 0.1uF 25V
C414	1-124-257-00	s	ELECT 2.2uF 20% 50V
C415	1-163-038-91	s	CERAMIC, CHIP 0.1uF 25V
C416	1-124-589-11	s	ELECT 47uF 20% 16V
C417	1-124-589-11	s	ELECT 47uF 20% 16V
C418	1-163-038-91	s	CERAMIC, CHIP 0.1uF 25V
C419	1-163-037-11	■	CERAMIC, CHIP 0.022uF 10% 25V
C420	1-163-038-91	s	CERAMIC, CHIP 0.1uF 25V
C421	1-163-038-91	s	CERAMIC, CHIP 0.1uF 25V
C422	1-163-037-11	s	CERAMIC, CHIP 0.022uF 10% 25V
C423	1-163-037-11	s	CERAMIC, CHIP 0.022uF 10% 25V
C424	1-163-038-91	s	CERAMIC, CHIP 0.1uF 25V
C425	1-163-038-91	s	CERAMIC, CHIP 0.1uF 25V
C426	1-124-589-11	s	ELECT 47uF 20% 16V
C427	1-124-589-11	s	ELECT 47uF 20% 16V
C428	1-163-038-91	s	CERAMIC, CHIP 0.1uF 25V
C429	1-163-085-00	s	CERAMIC, CHIP 2pF 50V
C430	1-163-038-91	s	CERAMIC, CHIP 0.1uF 25V
C431	1-124-589-11	s	ELECT 47uF 20% 16V
C432-436	1-163-038-91	s	CERAMIC, CHIP 0.1uF 25V
C437	1-126-160-11	■	ELECT 1uF 20% 50V

(DA-95A BOARD(ES-7(CE)))

Ref. No. or Q'ty	Part No.	SP	Description
C438	1-163-038-91	s	CERAMIC, CHIP 0.1uF 25V
C439	1-163-038-91	s	CERAMIC, CHIP 0.1uF 25V
C440	1-163-133-00	s	CERAMIC, CHIP 470pF 5% 50V
C441	1-163-038-91	s	CERAMIC, CHIP 0.1uF 25V
C442	1-124-257-00	s	ELECT 2.2uF 20% 50V
C443	1-163-037-11	s	CERAMIC, CHIP 0.022uF 10% 25V
C444	1-163-038-91	s	CERAMIC, CHIP 0.1uF 25V
C445	1-163-038-91	s	CERAMIC, CHIP 0.1uF 25V
C446	1-124-589-11	s	ELECT 47uF 20% 16V
C447	1-163-038-91	■	CERAMIC, CHIP 0.1uF 25V
C448	1-163-038-91	■	CERAMIC, CHIP 0.1uF 25V
C449	1-163-038-91	s	CERAMIC, CHIP 0.1uF 25V
C450	1-124-589-11	s	ELECT 47uF 20% 16V
C451	1-163-038-91	s	CERAMIC, CHIP 0.1uF 25V
C452	1-163-038-91	s	CERAMIC, CHIP 0.1uF 25V
C453	1-163-038-91	s	CERAMIC, CHIP 0.1uF 25V
C454	1-163-038-91	s	CERAMIC, CHIP 0.1uF 25V
C455	1-124-261-00	s	ELECT 10uF 20% 50V
C456	1-163-038-91	s	CERAMIC, CHIP 0.1uF 25V
C457	1-126-160-11	■	ELECT 1uF 20% 50V
C458	1-163-038-91	s	CERAMIC, CHIP 0.1uF 25V
C459	1-163-133-00	s	CERAMIC, CHIP 470pF 5% 50V
C460	1-163-038-91	s	CERAMIC, CHIP 0.1uF 25V
C461	1-124-257-00	s	ELECT 2.2uF 20% 50V
C462	1-163-038-91	s	CERAMIC, CHIP 0.1uF 25V
C463	1-163-038-91	s	CERAMIC, CHIP 0.1uF 25V
C464	1-163-038-91	s	CERAMIC, CHIP 0.1uF 25V
C465	1-163-037-11	s	CERAMIC, CHIP 0.022uF 10% 25V
C466	1-124-589-11	■	ELECT 47uF 20% 16V
C467	1-163-037-11	■	CERAMIC, CHIP 0.022uF 10% 25V
C468-473	1-163-038-91	s	CERAMIC, CHIP 0.1uF 25V
C474	1-124-589-11	■	ELECT 47uF 20% 16V
C475	1-124-589-11	■	ELECT 47uF 20% 16V
C476	1-163-038-91	s	CERAMIC, CHIP 0.1uF 25V
C477	1-163-089-00	s	CERAMIC, CHIP 6pF 50V
C478	1-163-038-91	s	CERAMIC, CHIP 0.1uF 25V
C479	1-163-251-11	s	CERAMIC, CHIP 100pF 5% 50V
C480	1-163-038-91	■	CERAMIC, CHIP 0.1uF 25V
C481	1-163-227-11	■	CERAMIC, CHIP 10pF [illegible] 50V
C482	1-163-038-91	■	CERAMIC, CHIP 0.1uF 25V
C483	1-124-589-11	s	ELECT 47uF 20% 16V
C484	1-163-038-91	s	CERAMIC, CHIP 0.1uF 25V
C485	1-124-248-00	s	ELECT 22uF 20% 35V
C486	1-124-248-00	s	ELECT 22uF 20% 35V
C487-492	1-163-038-91	s	CERAMIC, CHIP 0.1uF 25V
C600	1-163-038-91	s	CERAMIC, CHIP 0.1uF 25V
C601	1-163-038-91	s	CERAMIC, CHIP 0.1uF 25V
C602	1-163-038-91	s	CERAMIC, CHIP 0.1uF 25V
C603	1-163-038-91	s	CERAMIC, CHIP 0.1uF 25V
C604	1-124-589-11	s	ELECT 47uF 20% 16V
C605	1-124-589-11	■	ELECT 47uF 20% 16V
C606-615	1-163-038-91	s	CERAMIC, CHIP 0.1uF 25V
C616	1-163-221-11	s	CERAMIC, CHIP 4pF 50V
C617	1-163-231-11	s	CERAMIC, CHIP 15pF 5% 50V
C618	1-163-231-11	■	CERAMIC, CHIP 15pF 5% 50V
C619	1-163-038-91	s	CERAMIC, CHIP 0.1uF 25V
C620	1-163-038-91	s	CERAMIC, CHIP 0.1uF 25V
C621	1-124-589-11	s	ELECT 47uF 20% 16V
C622	1-124-589-11	s	ELECT 47uF 20% 16V

(DA-95A BOARD(ES-7(CE)))

Ref. No. or Q'ty	Part No.	SP	Description
C623	1-163-038-91	s	CERAMIC, CHIP 0.1uF 25V
C624	1-163-038-91	s	CERAMIC, CHIP 0.1uF 25V
C625	1-163-038-91	s	CERAMIC, CHIP 0.1uF 25V
C626	1-124-589-11	s	ELECT 47uF 20% 16V
C627	1-163-038-91	s	CERAMIC, CHIP 0.1uF 25V
C628	1-163-038-91	s	CERAMIC, CHIP 0.1uF 25V
C629	1-124-589-11	s	ELECT 47uF 20% 16V
C630	1-163-235-11	s	CERAMIC, CHIP 22pF 5% 50V
C631	1-163-038-91	■	CERAMIC, CHIP 0.1uF 25V
C632	1-163-237-11	s	CERAMIC, CHIP 27pF 5% 50V
C633	1-163-038-91	s	CERAMIC, CHIP 0.1uF 25V
C634	1-163-038-91	■	CERAMIC, CHIP 0.1uF 25V
C635	1-163-038-91	s	CERAMIC, CHIP 0.1uF 25V
C636	1-163-038-91	s	CERAMIC, CHIP 0.1uF 25V
C637	1-126-160-11	s	ELECT 1uF 20% 50V
C638	1-163-133-00	s	CERAMIC, CHIP 470pF 5% 50V
C639	1-163-037-11	s	CERAMIC, CHIP 0.022uF 10% 25V
C640	1-124-257-00	s	ELECT 2.2uF 20% 50V
C641	1-124-589-11	s	ELECT 47uF 20% 16V
C642	1-163-038-91	■	CERAMIC, CHIP 0.1uF 25V
C643	1-124-589-11	s	ELECT 47uF 20% 16V
C644	1-163-235-11	s	CERAMIC, CHIP 22pF 5% 50V
C645	1-163-038-91	s	CERAMIC, CHIP 0.1uF 25V
C646	1-163-237-11	s	CERAMIC, CHIP 27pF 5% 50V
C647	1-124-589-11	s	ELECT 47uF 20% 16V
C648	1-163-038-91	s	CERAMIC, CHIP 0.1uF 25V
C649	1-163-038-91	s	CERAMIC, CHIP 0.1uF 25V
C650	1-163-038-91	s	CERAMIC, CHIP 0.1uF 25V
C651	1-163-038-91	s	CERAMIC, CHIP 0.1uF 25V
C652	1-126-160-11	s	ELECT 1uF 20% 50V
C653	1-163-133-00	s	CERAMIC, CHIP 470pF 5% 50V
C654	1-163-037-11	s	CERAMIC, CHIP 0.022uF 10% 25V
C655	1-124-257-00	s	ELECT 2.2uF 20% 50V
C656	1-163-038-91	s	CERAMIC, CHIP 0.1uF 25V
C657	1-163-038-91	s	CERAMIC, CHIP 0.1uF 25V
C658	1-163-251-11	s	CERAMIC, CHIP 100pF 5% 50V
C659-663	1-163-038-91	s	CERAMIC, CHIP 0.1uF 25V
C664	1-124-589-11	■	ELECT 47uF 20% 16V
C665	1-124-589-11	s	ELECT 47uF 20% 16V
C666	1-163-038-91	s	CERAMIC, CHIP 0.1uF 25V
C667	1-163-038-91	s	CERAMIC, CHIP 0.1uF 25V
C668	1-163-038-91	s	CERAMIC, CHIP 0.1uF 25V
C669	1-163-038-91	s	CERAMIC, CHIP 0.1uF 25V
C670	1-124-234-00	s	ELECT 22uF 20% 16V
C671	1-163-038-91	s	CERAMIC, CHIP 0.1uF 25V
C672	1-163-038-91	s	CERAMIC, CHIP 0.1uF 25V
C673	1-163-038-91	s	CERAMIC, CHIP 0.1uF 25V
C674	1-124-589-11	s	ELECT 47uF 20% 16V
C675	1-163-038-91	s	CERAMIC, CHIP 0.1uF 25V
C676	1-163-038-91	s	CERAMIC, CHIP 0.1uF 25V
C677	1-163-038-91	s	CERAMIC, CHIP 0.1uF 25V
C678	1-163-038-91	s	CERAMIC, CHIP 0.1uF 25V
C679	1-124-234-00	s	ELECT 22uF 20% 16V
C680	1-124-589-11	s	ELECT 47uF 20% 16V
C681	1-163-038-91	s	CERAMIC, CHIP 0.1uF 25V
C682	1-163-235-11	s	CERAMIC, CHIP 22pF 5% 50V
C683	1-163-038-91	s	CERAMIC, CHIP 0.1uF 25V
C684	1-124-234-00	s	ELECT 22uF 20% 16V
C685	1-164-232-11	s	CERAMIC, CHIP 0.01uF 10% 100V

(DA-95A BOARD(ES-7(CE)))

Ref. No. or Q'ty	Part No.	SP	Description
C686	1-163-038-91	s	CERAMIC, CHIP 0.1uF 25V
C687	1-163-038-91	s	CERAMIC, CHIP 0.1uF 25V
C688	1-131-352-00	s	TANTALUM 6.8uF 10% 35V
C689	1-163-038-91	s	CERAMIC, CHIP 0.1uF 25V
C690	1-163-099-00	s	CERAMIC, CHIP 18pF 5% 50V
C691	1-164-232-11	s	CERAMIC, CHIP 0.01uF 10% 100V
C692	1-163-038-91	s	CERAMIC, CHIP 0.1uF 25V
C693	1-163-038-91	s	CERAMIC, CHIP 0.1uF 25V
C694	1-124-589-11	s	ELECT 47uF 20% 16V
C695	1-131-352-00	s	TANTALUM 6.8uF 10% 35V
C696	1-163-038-91	■	CERAMIC, CHIP 0.1uF 25V
C697	1-124-589-11	s	ELECT 47uF 20% 16V
C698	1-124-589-11	s	ELECT 47uF 20% 16V
C699-703	1-163-038-91	s	CERAMIC, CHIP 0.1uF 25V
C704	1-163-113-00	s	CERAMIC, CHIP 68pF [illegible] 50V
C705	1-163-038-91	s	CERAMIC, CHIP 0.1uF 25V
C706	1-163-251-11	s	CERAMIC, CHIP 100pF [illegible] 50V
C707	1-163-235-11	s	CERAMIC, CHIP 22pF 5% 50V
C708	1-163-235-11	■	CERAMIC, CHIP 22pF 5% 50V
C709	1-163-235-11	■	CERAMIC, CHIP 22pF [illegible] 50V
C710	1-163-235-11	s	CERAMIC, CHIP 22pF [illegible] 50V
C711	1-163-251-11	■	CERAMIC, CHIP 100pF 5% 50V
C712	1-163-251-11	s	CERAMIC, CHIP 100pF [illegible] 50V
C713	1-163-251-11	s	CERAMIC, CHIP 100pF [illegible] 50V
C714	1-163-251-11	s	CERAMIC, CHIP 100pF 5% 50V
C715	1-124-465-00	s	ELECT 0.47uF 20% 50V
C716	1-126-160-11	■	ELECT 1uF 20% 50V
C717	1-124-234-00	■	ELECT 22uF 20% 16V
C718	1-163-235-11	s	CERAMIC, CHIP 22pF [illegible] 50V
C719	1-124-589-11	s	ELECT 47uF 20% 16V
C720	1-124-261-00	s	ELECT 10uF 20% 50V
C721	1-163-038-91	s	CERAMIC, CHIP 0.1uF 25V
C722	1-163-019-00	s	CERAMIC, CHIP 0.0068uF 10% 50V
C723	1-163-139-00	s	CERAMIC, CHIP 820pF 5% 50V
C724	1-126-160-11	s	ELECT 1uF 20% 50V
C725	1-163-245-11	s	CERAMIC, CHIP 56pF [illegible] 50V
C726	1-163-237-11	■	CERAMIC, CHIP 27pF 5% 50V
C727	1-163-222-11	s	CERAMIC, CHIP 5pF 50V
C728	1-164-232-11	s	CERAMIC, CHIP 0.01uF 10% 100V
C729	1-124-589-11	s	ELECT 47uF 20% 16V
C730	1-124-248-00	s	ELECT 22uF 20% 35V
C731	1-124-248-00	s	ELECT 22uF 20% 35V
C732-743	1-163-038-91	s	CERAMIC, CHIP 0.1uF 25V
C744	1-163-222-11	■	CERAMIC, CHIP 5pF 50V
C745	1-163-038-91	s	CERAMIC, CHIP 0.1uF 25V
C746	1-163-038-91	s	CERAMIC, CHIP 0.1uF 25V
C747	1-163-038-91	s	CERAMIC, CHIP 0.1uF 25V
C748	1-124-589-11	■	ELECT 47uF 20% 16V
C749	1-163-133-00	s	CERAMIC, CHIP 470pF 5% 50V
C800	1-124-589-11	s	ELECT 47uF 20% 16V
C801	1-124-589-11	s	ELECT 47uF 20% 16V
C802-806	1-163-038-91	s	CERAMIC, CHIP 0.1uF 25V
C807	1-124-589-11	■	ELECT 47uF 20% 16V
C808	1-163-038-91	s	CERAMIC, CHIP 0.1uF 25V
C809	1-124-589-11	s	ELECT 47uF 20% 16V
C810	1-124-234-00	s	ELECT 22uF 20% 16V
C811	1-163-038-91	s	CERAMIC, CHIP 0.1uF 25V
C812	1-126-160-11	s	ELECT 1uF 20% 50V
C813	1-163-251-11	s	CERAMIC, CHIP 100pF 5% 50V

(DA-95A BOARD(ES-7 (CE)))

Ref. No. or Q'ty	Part No.	SP	Description
C814	1-163-038-91	s	CERAMIC, CHIP 0.1uF 25V
C815	1-163-037-11	s	CERAMIC, CHIP 0.022uF 10% 25V
C816	1-124-257-00	s	ELECT 2.2uF 20% 50V
C817	1-126-160-11	■	ELECT 1uF 20% 50V
C818	1-163-251-11	■	CERAMIC, CHIP 100pF 5% 50V
C819	1-163-037-11	s	CERAMIC, CHIP 0.022uF 10% 25V
C820	1-124-257-00	■	ELECT 2.2uF 20% 50V
C821-825	1-163-038-91	s	CERAMIC, CHIP 0.1uF 25V
C826	1-124-589-11	s	ELECT 47uF 20% 16V
C827	1-163-251-11	s	CERAMIC, CHIP 100pF 5% 50V
C828	1-124-261-00	■	ELECT 10uF 20% 50V
C829	1-163-038-91	s	CERAMIC, CHIP 0.1uF 25V
C830	1-163-038-91	s	CERAMIC, CHIP 0.1uF 25V
C831	1-163-038-91	s	CERAMIC, CHIP 0.1uF 25V
C832	1-163-038-91	s	CERAMIC, CHIP 0.1uF 25V
C833	1-124-234-00	s	ELECT 22uF 20% 16V
C834	1-163-038-91	s	CERAMIC, CHIP 0.1uF 25V
C835	1-163-038-91	s	CERAMIC, CHIP 0.1uF 25V
C836	1-163-038-91	■	CERAMIC, CHIP 0.1uF 25V
C837	1-124-589-11	■	ELECT 47uF 20% 16V
C838	1-163-038-91	s	CERAMIC, CHIP 0.1uF 25V
C839	1-124-589-11	s	ELECT 47uF 20% 16V
C840	1-163-038-91	s	CERAMIC, CHIP 0.1uF 25V
C841	1-124-589-11	s	ELECT 47uF 20% 16V
C842	1-163-038-91	s	CERAMIC, CHIP 0.1uF 25V
C843	1-163-235-11	s	CERAMIC, CHIP 22pF 5% 50V
C844	1-163-038-91	s	CERAMIC, CHIP 0.1uF 25V
C845	1-124-234-00	■	ELECT 22uF 20% 16V
C846	1-164-232-11	s	CERAMIC, CHIP 0.01uF 10% 100V
C847	1-163-038-91	s	CERAMIC, CHIP 0.1uF 25V
C848	1-163-038-91	s	CERAMIC, CHIP 0.1uF 25V
C849	1-163-038-91	s	CERAMIC, CHIP 0.1uF 25V
C850	1-131-352-00	s	TANTALUM 6.8uF 10% 35V
C851	1-124-589-11	s	ELECT 47uF 20% 16V
C852	1-163-038-91	s	CERAMIC, CHIP 0.1uF 25V
C853	1-163-038-91	s	CERAMIC, CHIP 0.1uF 25V
C854	1-163-099-00	s	CERAMIC, CHIP 18pF 5% 50V
C855	1-164-232-11	■	CERAMIC, CHIP 0.01uF 10% 100V
C856	1-163-038-91	■	CERAMIC, CHIP 0.1uF 25V
C857	1-131-352-00	s	TANTALUM 6.8uF 10% 35V
C858	1-163-038-91	s	CERAMIC, CHIP 0.1uF 25V
C859	1-163-038-91	s	CERAMIC, CHIP 0.1uF 25V
C860	1-124-589-11	s	ELECT 47uF 20% 16V
C861	1-124-589-11	s	ELECT 47uF 20% 16V
C862	1-163-038-91	s	CERAMIC, CHIP 0.1uF 25V
C863	1-163-038-91	s	CERAMIC, CHIP 0.1uF 25V
C867	1-163-113-00	s	CERAMIC, CHIP 68pF 5% 50V
C868	1-163-038-91	s	CERAMIC, CHIP 0.1uF 25V
C869	1-163-038-91	s	CERAMIC, CHIP 0.1uF 25V
C870	1-124-589-11	s	ELECT 47uF 20% 16V
C871	1-124-589-11	s	ELECT 47uF 20% 16V
C872	1-163-038-91	■	CERAMIC, CHIP 0.1uF 25V
C873	1-163-038-91	s	CERAMIC, CHIP 0.1uF 25V
C875	1-163-038-91	s	CERAMIC, CHIP 0.1uF 25V
C876	1-163-038-91	s	CERAMIC, CHIP 0.1uF 25V
C877	1-124-589-11	s	ELECT 47uF 20% 16V
C878	1-163-234-11	s	CERAMIC, CHIP 20pF 5% 50V
C879	1-163-239-11	s	CERAMIC, CHIP 33pF 5% 50V
C880	1-124-261-00	s	ELECT 10uF 20% 50V

(DA-95A BOARD(ES-7(CE)))

Ref. No. or Q'ty	Part No.	SP	Description
C904	1-163-038-91	s	CERAMIC, CHIP 0.1uF 25V
C905	1-126-933-11	s	ELECT 100uF 20% 16V
C906	1-163-038-91	s	CERAMIC, CHIP 0.1uF 25V
C907	1-163-038-91	s	CERAMIC, CHIP 0.1uF 25V
C908	1-107-889-11	s	ELECT 220uF 20% 25V
C909	1-163-038-91	s	CERAMIC, CHIP 0.1uF 25V
C910	1-163-038-91	s	CERAMIC, CHIP 0.1uF 25V
C911	1-107-889-11	s	ELECT 220uF 20% 25V
C912	1-126-933-11	s	ELECT 100uF 20% 16V
C913	1-163-038-91	■	CERAMIC, CHIP 0.1uF 25V
C914	1-163-038-91	s	CERAMIC, CHIP 0.1uF 25V
C915	1-107-889-11	s	ELECT 220uF 20% 25V
C916	1-163-038-91	s	CERAMIC, CHIP 0.1uF 25V
C917	1-163-038-91	s	CERAMIC, CHIP 0.1uF 25V
C918	1-107-889-11	s	ELECT 220uF 20% 25V
C919	1-163-038-91	s	CERAMIC, CHIP 0.1uF 25V
C920	1-126-933-11	s	ELECT 100uF 20% 16V
C921	1-163-038-91	s	CERAMIC, CHIP 0.1uF 25V
C922	1-163-038-91	s	CERAMIC, CHIP 0.1uF 25V
C923	1-126-934-11	s	ELECT 220uF 20% 16V
C927	1-126-933-11	s	ELECT 100uF 20% 16V
C928	1-126-934-11	■	ELECT 220uF 20% 16V
C932	1-107-889-11	s	ELECT 220uF 20% 25V
C933	1-163-038-91	s	CERAMIC, CHIP 0.1uF 25V
C934	1-163-038-91	s	CERAMIC, CHIP 0.1uF 25V
CN514	1-766-794-11	o	CONNECTOR, DIN 64P, FEMALE
CN531	1-766-239-11	o	CONNECTOR, CIRCULAR 4P(S), FEMALE
CN532	1-774-965-11	o	CONNECTOR, 3-BNC, FEMALE
CN533	1-774-965-11	o	CONNECTOR, 3-BNC, FEMALE
CN534	1-766-239-11	o	CONNECTOR, CIRCULAR 4P(S), FEMALE
CN535	1-774-966-11	o	CONNECTOR, 4-BNC, FEMALE
CN536	1-774-965-11	o	CONNECTOR, 3-BNC, FEMALE
CN611	1-778-261-11	o	CONNECTOR, BB 124P, MALE
CN613	1-778-261-11	o	CONNECTOR, [redacted] 124P, MALE
CNI124	1-526-816-21	■	SOCKET, IC (DP) 24P
D100	8-719-800-76	s	DIODE 1SS226
D101	8-719-800-76	s	DIODE 1SS226
D300	8-719-105-28	s	DIODE RD2.4M-B
D301	8-719-105-28	■	DIODE RD2.4M-B
D302	8-719-105-28	s	DIODE RD2.4M-B
D400	8-719-105-28	s	DIODE RD2.4M-B
D401	8-719-105-28	s	DIODE RD2.4M-B
D402	8-719-105-28	s	DIODE RD2.4M-B
D403	8-719-105-57	■	DIODE RD3.9M-B1
D602	8-719-800-76	s	DIODE 1SS226
D603	8-719-801-78	■	DIODE 1SS184
D604	8-719-801-78	s	DIODE 1SS184
D800	8-719-800-76	s	DIODE 1SS226
FB800	1-500-184-11	s	BEAD, FERRITE
FB801	1-500-184-11	s	BEAD, FERRITE
FB802	1-500-184-11	s	BEAD, FERRITE
FB803	1-500-184-11	■	BEAD, FERRITE
FB901-910	1-500-202-11	s	BEAD, FERRITE
FL100	1-239-642-21	s	EMIFIL ARRAY, CHIP
FL101	1-233-314-11	s	FILTER, NOISE, CHIP
FL102	1-233-314-11	■	FILTER, NOISE, CHIP

(DA-95A BOARD(ES-7(CE)))

Ref. No. or Q'ty	Part No.	SP	Description
FL103	1-239-642-21	s	EMIFIL ARRAY, CHIP
FL104	1-239-642-21	s	EMIFIL ARRAY, CHIP
FL300	1-233-614-11	s	FILTER, LOW-PASS
FL301	1-233-599-11	s	FILTER, LOW-PASS
FL302	1-233-599-11	s	FILTER, LOW-PASS
FL400-415	1-233-314-11	s	FILTER, NOISE, CHIP
FL600	1-235-758-11	s	FILTER, LOW-PASS
FL601	1-235-758-11	s	FILTER, LOW-PASS
FL602	1-235-181-00	s	FILTER, BANDPASS 4.43MHz
FL603	1-235-584-11	s	FILTER, LOW-PASS
FL604	1-235-181-00	s	FILTER, BANDPASS 4.43MHz
FL605	1-233-314-11	s	FILTER, NOISE, CHIP
FL606	1-233-314-11	s	FILTER, NOISE, CHIP
FL607	1-233-314-11	s	FILTER, NOISE, CHIP
FL608	1-233-314-11	s	FILTER, NOISE, CHIP
FL611	1-233-314-11	s	FILTER, NOISE, CHIP
FL614	1-233-314-11	s	FILTER, NOISE, CHIP
FL615	1-233-314-11	■	FILTER, NOISE, CHIP
FL616	1-233-314-11	s	FILTER, NOISE, CHIP
FL800	1-235-584-11	s	FILTER, LOW-PASS
FL801	1-235-181-00	s	FILTER, BANDPASS 4.43MHz
FL802	1-235-181-00	s	FILTER, BANDPASS 4.43MHz
FL803	1-235-584-11	s	FILTER, LOW-PASS
FL804	1-233-314-11	s	FILTER, NOISE, CHIP
FL806	1-233-314-11	s	FILTER, NOISE, CHIP
FL808	1-233-314-11	s	FILTER, NOISE, CHIP
FL810	1-233-314-11	s	FILTER, NOISE, CHIP
IC100	8-759-245-45	s	IC TA78L09F
IC101	8-759-987-27	s	IC LM1881M
IC102	8-759-515-09	s	IC SN74ALS374ANS
IC103	8-759-929-26	s	IC TL431CPS
IC104	8-759-929-21	s	IC TLC27L2CPS
IC105	8-759-239-34	s	IC TC74HC4538AF
IC106	8-752-335-47	s	IC CXD1216M
IC107	8-759-242-64	s	IC TC4W53F
IC108	8-759-926-44	■	IC SN74HC240ANS
IC109	8-752-332-67	s	IC CXD1217M
IC110	8-759-288-01	s	IC SM5828BP
IC111	8-759-926-67	s	IC SN74HC374ANS
IC112	8-759-926-67	s	IC SN74HC374ANS
IC113	8-759-926-67	s	IC SN74HC374ANS
IC114	8-759-925-74	s	IC TC74HC04ANS
IC115	8-759-515-09	s	IC SN74ALS374ANS
IC116	8-759-242-64	s	IC TC4W53F
IC117	8-759-239-58	s	IC TC74HC221AF
IC118	8-759-295-09	s	IC TLC2932IPW
IC119	8-759-981-48	s	IC NJM082M
IC121	8-759-037-79	s	IC MC74HC163AF
IC122	8-759-037-79	s	IC MC74HC163AF
IC123	8-759-037-79	s	IC MC74HC163AF
IC124	8-759-436-63	o	IC 20V8B-ES7-DA124V1.20
IC125	8-759-925-90	s	IC SN74HC74ANS
IC126	8-759-926-24	s	IC SN74HC164ANS
IC128	8-759-926-24	s	IC SN74HC164ANS
IC129	8-759-925-74	s	IC TC74HC04ANS
IC130	8-759-359-54	s	IC SN74ALS244CNS-E20
IC131	8-759-037-79	s	IC MC74HC163AF

(DA-95A BOARD(ES-7(CE)))

Ref. No. or Q'ty	Part No.	SP	Description
IC132	8-759-037-79	s	IC MC74HC163AF
IC133	8-759-037-79	s	IC MC74HC163AF
IC134	8-759-037-79	s	IC MC74HC163AF
IC135	8-759-925-74	s	IC TC74HC04ANS
IC136	8-759-926-67	s	IC SN74HC374ANS
IC137	8-759-925-90	s	IC SN74HC74ANS
IC138	8-759-037-79	s	IC MC74HC163AF
IC139	8-759-037-79	s	IC MC74HC163AF
IC140	8-759-927-46	s	IC SN74HC00ANS
IC141	8-759-926-48	s	IC SN74HC244NS
IC142	8-759-925-78	s	IC SN74HC10ANS
IC143	8-759-973-85	s	IC SN74ALS74ANS
IC144	8-759-925-76	s	IC SN74HC08ANS
IC145	8-759-925-74	■	IC TC74HC04ANS
IC147	8-759-934-41	■	IC SN74ALS240ANS
IC148	8-759-981-48	s	IC NJM082M
IC300	8-759-359-54	s	IC SN74ALS244CNS-E20
IC301	8-759-515-09	s	IC SN74ALS374ANS
IC302	8-759-515-09	s	IC SN74ALS374ANS
IC303	8-759-515-09	s	IC SN74ALS374ANS
IC304	8-759-925-90	s	IC SN74HC74ANS
IC305	8-759-099-38	s	IC SN74HCT374ANS-E05
IC306	8-759-099-38	s	IC SN74HCT374ANS-E05
IC307	8-759-099-38	s	IC SN74HCT374ANS-E05
IC308	8-759-099-38	s	IC SN74HCT374ANS-E05
IC309	8-759-099-38	s	IC SN74HCT374ANS-E05
IC310	8-759-099-38	s	IC SN74HCT374ANS-E05
IC311	8-759-099-38	■	IC SN74HCT374ANS-E05
IC312	8-752-032-93	s	IC CXA1260Q-Z
IC313	8-759-929-26	s	IC TL431CPS
IC314	8-752-052-82	s	IC CXA1432M
IC315	8-759-271-04	s	IC LT1252CS8
IC316	8-752-052-82	■	IC CXA1432M
IC317	8-759-271-04	s	IC LT1252CS8
IC318	8-752-052-82	s	IC CXA1432M
IC319	8-759-271-04	s	IC LT1252CS8
IC320	8-759-099-38	s	IC SN74HCT374ANS-E05
IC321	8-759-045-17	s	IC NJM79L05UA
IC322	8-759-245-45	s	IC TA78L09F
IC323	8-759-926-44	s	IC SN74HC240ANS
IC324	8-759-925-74	s	IC TC74HC04ANS
IC325	8-759-925-90	■	IC SN74HC74ANS
IC326	8-759-045-17	s	IC NJM79L05UA
IC327	8-759-045-17	■	IC NJM79L05UA
IC328	8-759-099-38	■	IC SN74HCT374ANS-E05
IC400	8-752-052-73	s	IC CXA1451M
IC401	8-759-242-64	s	IC TC4W53F
IC402	8-752-052-73	s	IC CXA1451M
IC403	8-752-052-73	s	IC CXA1451M
IC404	8-759-242-64	s	IC TC4W53F
IC405	8-752-052-73	s	IC CXA1451M
IC406	8-752-052-73	s	IC CXA1451M
IC407	8-759-242-64	s	IC TC4W53F
IC408	8-752-052-73	s	IC CXA1451M
IC409	8-759-245-45	s	IC TA78L09F
IC410	8-759-045-17	s	IC NJM79L05UA
IC411	8-759-045-17	s	IC NJM79L05UA
IC412	8-759-045-17	s	IC NJM79L05UA
IC600	8-759-242-64	s	IC TC4W53F

(DA-95A BOARD(ES-7(CE)))

Ref. No. or Q'ty	Part No.	SP	Description
IC601	8-759-271-04	s	IC LT1252CS8
IC602	8-752-052-73	s	IC CXA1451M
IC603	8-759-262-03	s	IC MC14577CF
IC604	8-759-906-59	s	IC CX22017
IC605	8-759-271-04	s	IC LT1252CS8
IC606	8-759-262-03	s	IC MC14577CF
IC607	8-759-245-45	■	IC TA78L09F
IC608	8-759-300-71	s	IC HD14053BFP
IC609	8-759-239-23	s	IC TC74HC86AF
IC610	8-759-902-88	s	IC SN74LS123NS
IC611	8-759-933-65	s	IC SN74LS244NS
IC612	8-759-285-16	■	IC LC74760M-9070-TLM
IC613	8-759-510-71	s	IC BA10358F
IC614	8-759-925-85	s	IC SN74HC32ANS
IC615	8-759-926-24	■	IC SN74HC164ANS
IC616	8-759-926-82	s	IC SN74HC574ANS
IC617	8-759-242-64	s	IC TC4W53F
IC618	8-759-262-03	s	IC MC14577CF
IC619	8-759-242-64	s	IC TC4W53F
IC800	8-759-906-59	s	IC CX22017
IC801	8-759-245-45	s	IC TA78L09F
IC802	8-759-300-71	s	IC HD14053BFP
IC803	8-759-239-23	s	IC TC74HC86AF
IC804	8-759-902-88	s	IC SN74LS123NS
IC805	8-752-052-82	s	IC CXA1432M
IC806	8-752-052-73	s	IC CXA1451M
IC807	8-752-052-73	s	IC CXA1451M
IC808	8-759-510-71	s	IC BA10358F
IC900	8-759-157-17	■	IC PQ05SZ1U
IC901	8-759-701-84	s	IC NJM7905FA
IC902	8-759-157-17	s	IC PQ05SZ1U
L100	1-410-478-11	s	INDUCTOR 47uH
L101	1-408-425-00	s	INDUCTOR 220uH
L102	1-410-482-31	s	INDUCTOR 100uH
L103	1-410-478-11	s	INDUCTOR 47uH
L104	1-410-478-11	s	INDUCTOR 47uH
L105	1-410-478-11	s	INDUCTOR 47uH
L106	1-408-413-00	s	INDUCTOR 22uH
L107	1-410-478-11	s	INDUCTOR 47uH
L108	1-410-478-11	s	INDUCTOR 47uH
L109	1-410-478-11	s	INDUCTOR 47uH
L111-117	1-410-470-11	s	INDUCTOR 10uH
L118	1-408-413-00	s	INDUCTOR 22uH
L119	1-410-478-11	s	INDUCTOR 47uH
L300	1-408-413-00	s	INDUCTOR 22uH
L301	1-408-413-00	s	INDUCTOR 22uH
L302	1-410-478-11	s	INDUCTOR 47uH
L304	1-410-478-11	s	INDUCTOR 47uH
L306	1-410-478-11	s	INDUCTOR 47uH
L400	1-410-478-11	s	INDUCTOR 47uH
L402	1-410-478-11	s	INDUCTOR 47uH
L406	1-408-424-00	s	INDUCTOR 180uH
L407	1-410-478-11	s	INDUCTOR 47uH
L408	1-410-478-11	s	INDUCTOR 47uH
L600-607	1-410-478-11	■	INDUCTOR 47uH
L608	1-410-476-11	s	INDUCTOR 33uH
L609	1-410-478-11	s	INDUCTOR 47uH
L610	1-410-478-11	s	INDUCTOR 47uH

(DA-95A BOARD(ES-7(CE)))

Ref. No. or Q'ty	Part No.	SP	Description
L611	1-408-413-00	s	INDUCTOR 22uH
L612	1-408-406-00	■	INDUCTOR 5.6uH
L613	1-408-413-00	■	INDUCTOR 22uH
L614	1-410-478-11	■	INDUCTOR 47uH
L800	1-410-478-11	s	INDUCTOR 47uH
L801	1-410-478-11	s	INDUCTOR 47uH
L803	1-410-478-11	s	INDUCTOR 47uH
L804	1-410-478-11	s	INDUCTOR 47uH
L805	1-410-478-11	s	INDUCTOR 47uH
L806	1-410-478-11	s	INDUCTOR 47uH
L807	1-410-476-11	s	INDUCTOR 33uH
L808	1-410-478-11	s	INDUCTOR 47uH
L809	1-410-478-11	s	INDUCTOR 47uH
L810	1-410-462-11	■	INDUCTOR 2.2uH
L901	1-412-525-31	■	INDUCTOR 10uH
L902	1-412-525-31	s	INDUCTOR 10uH
L903	1-412-525-31	s	INDUCTOR 10uH
L904	1-412-525-31	s	INDUCTOR 10uH
PS900 ⚠	1-532-637-00	s	LINK, IC 1.0A
PS901 ⚠	1-532-637-00	s	LINK, IC 1.0A
PS902 ⚠	1-532-637-00	s	LINK, IC 1.0A
PS903 ⚠	1-532-637-00	s	LINK, IC 1.0A
Q100-104	8-729-120-28	s	TRANSISTOR 2SC1623-L5L6
Q105	8-729-216-22	■	TRANSISTOR 2SA1162
Q106	8-729-216-22	s	TRANSISTOR 2SA1162
Q107	8-729-120-28	■	TRANSISTOR 2SC1623-L5L6
Q108	8-729-120-28	s	TRANSISTOR 2SC1623-L5L6
Q109	8-729-106-60	s	TRANSISTOR 2SB1115A
Q110	8-729-216-22	■	TRANSISTOR 2SA1162
Q300	8-729-120-28	s	TRANSISTOR 2SC1623-L5L6
Q301	8-729-120-28	s	TRANSISTOR 2SC1623-L5L6
Q302	8-729-216-22	■	TRANSISTOR 2SA1162
Q303-307	8-729-120-28	s	TRANSISTOR 2SC1623-L5L6
Q308	8-729-216-22	s	TRANSISTOR 2SA1162
Q309	8-729-216-22	s	TRANSISTOR 2SA1162
Q310-314	8-729-120-28	s	TRANSISTOR 2SC1623-L5L6
Q315	8-729-216-22	s	TRANSISTOR 2SA1162
Q316	8-729-216-22	s	TRANSISTOR 2SA1162
Q317	8-729-120-28	■	TRANSISTOR 2SC1623-L5L6
Q400	8-729-120-28	■	TRANSISTOR 2SC1623-L5L6
Q401	8-729-216-22	s	TRANSISTOR 2SA1162
Q402	8-729-120-28	■	TRANSISTOR 2SC1623-L5L6
Q403	8-729-907-26	s	TRANSISTOR IMX1
Q404	8-729-120-28	s	TRANSISTOR 2SC1623-L5L6
Q405	8-729-120-28	■	TRANSISTOR 2SC1623-L5L6
Q406	8-729-216-22	s	TRANSISTOR 2SA1162
Q407	8-729-216-22	s	TRANSISTOR 2SA1162
Q408	8-729-216-22	s	TRANSISTOR 2SA1162
Q409	8-729-120-28	s	TRANSISTOR 2SC1623-L5L6
Q410	8-729-216-22	s	TRANSISTOR 2SA1162
Q411	8-729-120-28	s	TRANSISTOR 2SC1623-L5L6
Q412	8-729-216-22	s	TRANSISTOR 2SA1162
Q413	8-729-216-22	s	TRANSISTOR 2SA1162
Q414	8-729-120-28	s	TRANSISTOR 2SC1623-L5L6
Q415	8-729-120-28	s	TRANSISTOR 2SC1623-L5L6
Q416	8-729-120-28	s	TRANSISTOR 2SC1623-L5L6
Q417	8-729-216-22	s	TRANSISTOR 2SA1162
Q418	8-729-120-28	s	TRANSISTOR 2SC1623-L5L6

(DA-95A BOARD(ES-7(CE)))

Ref. No. or Q'ty	Part No.	SP	Description
Q419	8-729-907-26	s	TRANSISTOR IMX1
Q420	8-729-120-28	s	TRANSISTOR 2SC1623-L5L6
Q421	8-729-120-28	s	TRANSISTOR 2SC1623-L5L6
Q422	8-729-216-22	s	TRANSISTOR 2SA1162
Q423	8-729-216-22	s	TRANSISTOR 2SA1162
Q424	8-729-120-28	s	TRANSISTOR 2SC1623-L5L6
Q425	8-729-216-22	s	TRANSISTOR 2SA1162
Q426	8-729-907-26	s	TRANSISTOR IMX1
Q427	8-729-120-28	s	TRANSISTOR 2SC1623-L5L6
Q428	8-729-120-28	s	TRANSISTOR 2SC1623-L5L6
Q429	8-729-216-22	■	TRANSISTOR 2SA1162
Q430	8-729-216-22	s	TRANSISTOR 2SA1162
Q431	8-729-120-28	s	TRANSISTOR 2SC1623-L5L6
Q432	8-729-216-22	s	TRANSISTOR 2SA1162
Q433	8-729-216-22	s	TRANSISTOR 2SA1162
Q434	8-729-120-28	s	TRANSISTOR 2SC1623-L5L6
Q435	8-729-120-28	s	TRANSISTOR 2SC1623-L5L6
Q436	8-729-120-28	s	TRANSISTOR 2SC1623-L5L6
Q437	8-729-120-28	s	TRANSISTOR 2SC1623-L5L6
Q438	8-729-907-26	s	TRANSISTOR IMX1
Q439	8-729-120-28	s	TRANSISTOR 2SC1623-L5L6
Q440	8-729-120-28	s	TRANSISTOR 2SC1623-L5L6
Q441	8-729-120-28	s	TRANSISTOR 2SC1623-L5L6
Q442	8-729-120-28	s	TRANSISTOR 2SC1623-L5L6
Q443	8-729-216-22	s	TRANSISTOR 2SA1162
Q444	8-729-120-28	s	TRANSISTOR 2SC1623-L5L6
Q445	8-729-120-28	s	TRANSISTOR 2SC1623-L5L6
Q446	8-729-216-22	■	TRANSISTOR 2SA1162
Q600	8-729-216-22	s	TRANSISTOR 2SA1162
Q604	8-729-120-28	s	TRANSISTOR 2SC1623-L5L6
Q605	8-729-216-22	s	TRANSISTOR 2SA1162
Q606	8-729-216-22	s	TRANSISTOR 2SA1162
Q607-612	8-729-120-28	s	TRANSISTOR 2SC1623-L5L6
Q613	8-729-216-22	s	TRANSISTOR 2SA1162
Q614	8-729-120-28	■	TRANSISTOR 2SC1623-L5L6
Q615	8-729-120-28	s	TRANSISTOR 2SC1623-L5L6
Q616	8-729-216-22	s	TRANSISTOR 2SA1162
Q617	8-729-120-28	s	TRANSISTOR 2SC1623-L5L6
Q618	8-729-120-28	s	TRANSISTOR 2SC1623-L5L6
Q619	8-729-120-28	s	TRANSISTOR 2SC1623-L5L6
Q620	8-729-216-22	s	TRANSISTOR 2SA1162
Q621	8-729-216-22	s	TRANSISTOR 2SA1162
Q622	8-729-216-22	s	TRANSISTOR 2SA1162
Q623	8-729-120-28	s	TRANSISTOR 2SC1623-L5L6
Q624	8-729-216-22	■	TRANSISTOR 2SA1162
Q625	8-729-216-22	s	TRANSISTOR 2SA1162
Q626	8-729-120-28	s	TRANSISTOR 2SC1623-L5L6
Q627	8-729-120-28	s	TRANSISTOR 2SC1623-L5L6
Q628	8-729-027-59	■	TRANSISTOR DTC144EKA-T146
Q629	8-729-120-28	s	TRANSISTOR 2SC1623-L5L6
Q630	8-729-216-22	s	TRANSISTOR 2SA1162
Q631	8-729-120-28	s	TRANSISTOR 2SC1623-L5L6
Q632	8-729-120-28	s	TRANSISTOR 2SC1623-L5L6
Q633	8-729-216-22	s	TRANSISTOR 2SA1162
Q634	8-729-120-28	s	TRANSISTOR 2SC1623-L5L6
Q635	8-729-120-28	s	TRANSISTOR 2SC1623-L5L6
Q636	8-729-120-28	s	TRANSISTOR 2SC1623-L5L6
Q637	8-729-120-28	■	TRANSISTOR 2SC1623-L5L6
Q638	8-729-216-22	s	TRANSISTOR 2SA1162

(DA-95A BOARD(ES-7(CE)))

Ref. No. or Q'ty	Part No.	SP	Description
Q639	8-729-216-22	■	TRANSISTOR 2SA1162
Q640	8-729-216-22	s	TRANSISTOR 2SA1162
Q800	8-729-120-28	s	TRANSISTOR 2SC1623-L5L6
Q801	8-729-120-28	s	TRANSISTOR 2SC1623-L5L6
Q802-806	8-729-216-22	s	TRANSISTOR 2SA1162
Q807	8-729-120-28	s	TRANSISTOR 2SC1623-L5L6
Q808	8-729-120-28	s	TRANSISTOR 2SC1623-L5L6
Q809	8-729-027-59	s	TRANSISTOR DTC144EKA-T146
Q810	8-729-120-28	■	TRANSISTOR 2SC1623-L5L6
Q811	8-729-216-22	s	TRANSISTOR 2SA1162
Q812	8-729-120-28	s	TRANSISTOR 2SC1623-L5L6
Q813	8-729-120-28	s	TRANSISTOR 2SC1623-L5L6
Q814	8-729-216-22	■	TRANSISTOR 2SA1162
Q815	8-729-120-28	s	TRANSISTOR 2SC1623-L5L6
Q816	8-729-216-22	s	TRANSISTOR 2SA1162
Q817	8-729-120-28	s	TRANSISTOR 2SC1623-L5L6
Q818	8-729-216-22	s	TRANSISTOR 2SA1162
Q819	8-729-216-22	s	TRANSISTOR 2SA1162
R100	1-216-029-00	■	METAL, CHIP 150 5% 1/10W
R101	1-216-029-00	s	METAL, CHIP 150 5% 1/10W
R102	1-216-097-91	s	METAL, CHIP 100k 5% 1/10W
R103	1-216-097-91	s	METAL, CHIP 100k 5% 1/10W
R104	1-216-029-00	s	METAL, CHIP 150 5% 1/10W
R105	1-216-065-00	s	METAL, CHIP 4.7k 5% 1/10W
R106	1-216-057-00	■	METAL, CHIP 2.2k 5% 1/10W
R107	1-216-049-91	■	METAL, CHIP 1k 5% 1/10W
R108	1-216-065-00	s	METAL, CHIP 4.7k 5% 1/10W
R109	1-216-065-00	s	METAL, CHIP 4.7k 5% 1/10W
R110	1-216-117-00	s	METAL, CHIP 680k 5% 1/10W
R111	1-216-079-00	s	METAL, CHIP 18k 5% 1/10W
R112	1-216-073-00	s	METAL, CHIP 10k 5% 1/10W
R113	1-216-061-00	s	METAL, CHIP 3.3k 5% 1/10W
R114	1-216-057-00	s	METAL, CHIP 2.2k 5% 1/10W
R115	1-216-059-00	s	METAL, CHIP 2.7k 5% 1/10W
R116	1-216-093-00	■	METAL, CHIP 68k 5% 1/10W
R117	1-216-103-00	s	METAL, CHIP 180k 5% 1/10W
R118	1-216-053-00	s	METAL, CHIP 1.5k 5% 1/10W
R119	1-216-053-00	s	METAL, CHIP 1.5k 5% 1/10W
R120	1-216-059-00	s	METAL, CHIP 2.7k 5% 1/10W
R121	1-216-073-00	s	METAL, CHIP 10k 5% 1/10W
R122	1-216-081-00	s	METAL, CHIP 22k 5% 1/10W
R123	1-216-025-91	s	METAL, CHIP 100 5% 1/10W
R124	1-216-061-00	s	METAL, CHIP 3.3k 5% 1/10W
R125	1-216-039-00	s	METAL, CHIP 390 5% 1/10W
R126	1-216-073-00	s	METAL, CHIP 10k 5% 1/10W
R127	1-216-073-00	s	METAL, CHIP 10k 5% 1/10W
R128	1-216-063-91	s	METAL, CHIP 3.9k 5% 1/10W
R129	1-216-035-00	s	METAL, CHIP 270 5% 1/10W
R130	1-216-069-00	s	METAL, CHIP 6.8k 5% 1/10W
R131	1-216-033-00	s	METAL, CHIP 220 5% 1/10W
R132	1-216-077-00	■	METAL, CHIP 15k 5% 1/10W
R133	1-216-089-91	■	METAL, CHIP 47k 5% 1/10W
R134	1-216-065-00	s	METAL, CHIP 4.7k 5% 1/10W
R135	1-216-081-00	s	METAL, CHIP 22k 5% 1/10W
R136	1-216-295-91	s	RES, CHIP 0
R137	1-216-065-00	s	METAL, CHIP 4.7k 5% 1/10W
R138	1-216-057-00	s	METAL, CHIP 2.2k 5% 1/10W
R139	1-216-061-00	s	METAL, CHIP 3.3k 5% 1/10W

(DA-95A BOARD(ES-7(CE)))

Ref. No. or Q'ty	Part No.	SP	Description
R140	1-216-057-00	s	METAL, CHIP 2.2k 5% 1/10W
R141	1-216-069-00	s	METAL, CHIP 6.8k 5% 1/10W
R142	1-216-049-91	s	METAL, CHIP 1k 5% 1/10W
R143	1-216-049-91	s	METAL, CHIP 1k 5% 1/10W
R146	1-216-085-00	s	METAL, CHIP 33k 5% 1/10W
R147	1-216-659-11	s	METAL, CHIP 2.2k 0.5% 1/10W
R148	1-216-049-91	s	METAL, CHIP 1k 5% 1/10W
R149	1-216-049-91	s	METAL, CHIP 1k 5% 1/10W
R150	1-216-295-91	■	RES, CHIP 0
R151	1-216-295-91	s	RES, CHIP 0
R152	1-216-057-00	s	METAL, CHIP 2.2k 5% 1/10W
R153	1-216-295-91	s	RES, CHIP 0
R154	1-216-065-00	s	METAL, CHIP 4.7k 5% 1/10W
R155	1-216-065-00	s	METAL, CHIP 4.7k 5% 1/10W
R156	1-216-061-00	s	METAL, CHIP 3.3k 5% 1/10W
R157	1-216-057-00	s	METAL, CHIP 2.2k 5% 1/10W
R158	1-216-073-00	s	METAL, CHIP 10k 5% 1/10W
R159	1-216-085-00	s	METAL, CHIP 33k 5% 1/10W
R160	1-216-295-91	s	RES, CHIP 0
R161	1-216-073-00	■	METAL, CHIP 10k 5% 1/10W
R162	1-216-073-00	s	METAL, CHIP 10k 5% 1/10W
R163	1-216-121-91	s	METAL, CHIP 1M 5% 1/10W
R164	1-216-121-91	s	METAL, CHIP 1M 5% 1/10W
R166	1-216-295-91	s	RES, CHIP 0
R167	1-216-017-91	■	METAL, CHIP 47 5% 1/10W
R168	1-216-065-00	s	METAL, CHIP 4.7k 5% 1/10W
R170	1-216-017-91	s	METAL, CHIP 47 5% 1/10W
R171	1-216-057-00	■	METAL, CHIP 2.2k 5% 1/10W
R172	1-216-057-00	s	METAL, CHIP 2.2k 5% 1/10W
R173	1-216-057-00	■	METAL, CHIP 2.2k 5% 1/10W
R174	1-216-057-00	s	METAL, CHIP 2.2k 5% 1/10W
R175	1-216-041-00	s	METAL, CHIP 470 5% 1/10W
R176	1-216-041-00	s	METAL, CHIP 470 5% 1/10W
R177	1-216-649-11	■	METAL, CHIP 820 0.5% 1/10W
R178	1-216-041-00	■	METAL, CHIP 470 5% 1/10W
R179	1-216-659-11	s	METAL, CHIP 2.2k 0.5% 1/10W
R180	1-216-663-11	s	METAL, CHIP 3.3k 0.5% 1/10W
R181	1-216-659-11	s	METAL, CHIP 2.2k 0.5% 1/10W
R182	1-216-664-11	s	METAL, CHIP 3.6k 0.5% 1/10W
R183	1-216-611-11	s	METAL, CHIP 22 0.5% 1/10W
R184	1-216-635-11	s	METAL, CHIP 220 0.5% 1/10W
R185	1-216-049-91	s	METAL, CHIP 1k 5% 1/10W
R186	1-216-049-91	s	METAL, CHIP 1k 5% 1/10W
R187	1-216-053-00	s	METAL, CHIP 1.5k 5% 1/10W
R188	1-216-053-00	s	METAL, CHIP 1.5k 5% 1/10W
R189	1-216-053-00	s	METAL, CHIP 1.5k 5% 1/10W
R190	1-216-049-91	s	METAL, CHIP 1k 5% 1/10W
R191	1-216-033-00	s	METAL, CHIP 220 5% 1/10W
R192	1-216-017-91	s	METAL, CHIP 47 5% 1/10W
R193	1-216-045-00	s	METAL, CHIP 680 5% 1/10W
R194	1-216-651-11	s	METAL, CHIP 1k 0.5% 1/10W
R195	1-216-065-00	s	METAL, CHIP 4.7k 5% 1/10W
R196	1-216-049-91	s	METAL, CHIP 1k 5% 1/10W
R197	1-216-061-00	s	METAL, CHIP 3.3k 5% 1/10W
R198	1-216-053-00	s	METAL, CHIP 1.5k 5% 1/10W
R199	1-216-049-91	s	METAL, CHIP 1k 5% 1/10W
R200	1-216-029-00	s	METAL, CHIP 150 5% 1/10W
R201	1-216-009-00	s	METAL, CHIP 22 5% 1/10W
R202	1-216-009-00	■	METAL, CHIP 22 5% 1/10W

(DA-95A BOARD(ES-7(CE)))

Ref. No. or Q'ty	Part No.	SP	Description
R203	1-216-009-00	s	METAL, CHIP 22 5% 1/10W
R204	1-216-065-00	s	METAL, CHIP 4.7k 5% 1/10W
R205	1-216-049-91	s	METAL, CHIP 1k 5% 1/10W
R206	1-216-065-00	■	METAL, CHIP 4.7k 5% 1/10W
R207	1-216-295-91	■	RES, CHIP 0
R208	1-216-057-00	■	METAL, CHIP 2.2k 5% 1/10W
R209	1-216-057-00	■	METAL, CHIP 2.2k 5% 1/10W
R210	1-216-073-00	s	METAL, CHIP 10k 5% 1/10W
R211	1-216-065-00	s	METAL, CHIP 4.7k 5% 1/10W
R212	1-216-073-00	■	METAL, CHIP 10k 5% 1/10W
R213	1-216-061-00	s	METAL, CHIP 3.3k 5% 1/10W
R214	1-216-057-00	■	METAL, CHIP 2.2k 5% 1/10W
R215	1-216-097-91	■	METAL, CHIP 100k 5% 1/10W
R216	1-216-065-00	s	METAL, CHIP 4.7k 5% 1/10W
R217	1-216-061-00	■	METAL, CHIP 3.3k 5% 1/10W
R219	1-216-017-91	■	METAL, CHIP 47 5% 1/10W
R220	1-216-017-91	s	METAL, CHIP 47 5% 1/10W
R221	1-216-659-11	s	METAL, CHIP 2.2k 0.5% 1/10W
R222	1-216-295-91	s	RES, CHIP 0
R223	1-216-295-91	s	RES, CHIP 0
R225	1-216-295-91	s	RES, CHIP 0
R227	1-216-017-91	s	METAL, CHIP 47 5% 1/10W
R228	1-216-017-91	■	METAL, CHIP 47 5% 1/10W
R229-234	1-216-009-00	s	METAL, CHIP 22 5% 1/10W
R236	1-216-295-91	s	RES, CHIP 0
R237	1-216-295-91	s	RES, CHIP 0
R238	1-216-049-91	s	METAL, CHIP 1k 5% 1/10W
R239	1-216-295-91	■	RES, CHIP 0
R241	1-216-017-91	■	METAL, CHIP 47 5% 1/10W
R242	1-216-017-91	s	METAL, CHIP 47 5% 1/10W
R243	1-216-057-00	s	METAL, CHIP 2.2k 5% 1/10W
R244	1-216-057-00	s	METAL, CHIP 2.2k 5% 1/10W
R245	1-216-057-00	s	METAL, CHIP 2.2k 5% 1/10W
R246	1-216-057-00	s	METAL, CHIP 2.2k 5% 1/10W
R247	1-216-295-91	■	RES, CHIP 0
R248	1-216-057-00	■	METAL, CHIP 2.2k 5% 1/10W
R249-257	1-216-295-91	■	RES, CHIP 0
R262	1-216-057-00	s	METAL, CHIP 2.2k 5% 1/10W
R263	1-216-057-00	s	METAL, CHIP 2.2k 5% 1/10W
R264	1-216-295-91	s	RES, CHIP 0
R265	1-216-057-00	s	METAL, CHIP 2.2k 5% 1/10W
R266	1-216-057-00	■	METAL, CHIP 2.2k 5% 1/10W
R267	1-216-057-00	s	METAL, CHIP 2.2k 5% 1/10W
R268	1-216-057-00	■	METAL, CHIP 2.2k 5% 1/10W
R269	1-216-295-91	s	RES, CHIP 0
R300	1-216-017-91	■	METAL, CHIP 47 5% 1/10W
R301	1-216-049-91	s	METAL, CHIP 1k 5% 1/10W
R302	1-216-049-91	s	METAL, CHIP 1k 5% 1/10W
R303	1-216-017-91	s	METAL, CHIP 47 5% 1/10W
R305	1-216-045-00	s	METAL, CHIP 680 5% 1/10W
R306	1-208-775-11	s	METAL, CHIP 510 0.5% 1/10W
R307	1-216-041-00	s	METAL, CHIP 470 5% 1/10W
R308	1-216-017-91	s	METAL, CHIP 47 5% 1/10W
R309	1-216-057-00	s	METAL, CHIP 2.2k 5% 1/10W
R310	1-216-017-91	s	METAL, CHIP 47 5% 1/10W
R311	1-216-049-91	s	METAL, CHIP 1k 5% 1/10W
R312	1-216-639-11	s	METAL, CHIP 330 0.5% 1/10W
R313	1-216-639-11	■	METAL, CHIP 330 0.5% 1/10W
R314	1-216-295-91	s	RES, CHIP 0

(DA-95A BOARD(ES-7(CE)))

Ref. No. or Q'ty	Part No.	SP	Description
R315	1-216-065-00	s	METAL, CHIP 4.7k 5% 1/10W
R316	1-216-017-91	s	METAL, CHIP 47 [illegible] 1/10W
R317	1-216-641-11	s	METAL, CHIP 390 0.5% 1/10W
R318	1-216-647-11	s	METAL, CHIP 680 0.5% 1/10W
R319	1-216-651-11	■	METAL, CHIP 1k 0.5% 1/10W
R320	1-216-033-00	s	METAL, CHIP 220 5% 1/10W
R321	1-216-295-91	s	RES, CHIP 0
R322	1-216-041-00	■	METAL, CHIP 470 5% 1/10W
R323	1-216-043-91	s	METAL, CHIP 560 5% 1/10W
R324	1-216-073-00	s	METAL, CHIP 10k [illegible] 1/10W
R325	1-216-049-91	s	METAL, CHIP 1k 5% 1/10W
R326	1-216-017-91	■	METAL, CHIP 47 5% 1/10W
R327	1-216-057-00	s	METAL, CHIP 2.2k 5% 1/10W
R328	1-216-017-91	s	METAL, CHIP 47 5% 1/10W
R329	1-216-049-91	s	METAL, CHIP 1k 5% 1/10W
R330	1-216-017-91	s	METAL, CHIP 47 5% 1/10W
R331	1-216-049-91	■	METAL, CHIP 1k 5% 1/10W
R332	1-216-639-11	s	METAL, CHIP 330 0.5% 1/10W
R333	1-216-073-00	■	METAL, CHIP 10k 5% 1/10W
R334	1-216-041-00	s	METAL, CHIP 470 5% 1/10W
R335	1-216-049-91	s	METAL, CHIP 1k 5% 1/10W
R336	1-208-775-11	■	METAL, CHIP 510 0.5% 1/10W
R337	1-216-045-00	s	METAL, CHIP 680 5% 1/10W
R338	1-216-295-91	s	RES, CHIP 0
R339	1-216-639-11	■	METAL, CHIP 330 0.5% 1/10W
R340	1-216-065-00	s	METAL, CHIP 4.7k 5% 1/10W
R341	1-216-017-91	s	METAL, CHIP 47 5% 1/10W
R342	1-216-635-11	s	METAL, CHIP 220 0.5% 1/10W
R343	1-216-647-11	s	METAL, CHIP 680 0.5% 1/10W
R344	1-216-651-11	s	METAL, CHIP 1k 0.5% 1/10W
R345	1-216-025-91	■	METAL, CHIP 100 5% 1/10W
R347	1-216-041-00	■	METAL, CHIP 470 5% 1/10W
R350	1-208-775-11	s	METAL, CHIP 510 0.5% 1/10W
R351	1-216-073-00	s	METAL, CHIP 10k [illegible] 1/10W
R352	1-216-049-91	s	METAL, CHIP 1k 5% 1/10W
R353	1-216-017-91	s	METAL, CHIP 47 5% 1/10W
R354	1-216-057-00	■	METAL, CHIP 2.2k 5% 1/10W
R355	1-216-017-91	s	METAL, CHIP 47 5% 1/10W
R356	1-216-049-91	s	METAL, CHIP 1k 5% 1/10W
R357	1-216-017-91	s	METAL, CHIP 47 5% 1/10W
R358	1-216-049-91	s	METAL, CHIP 1k 5% 1/10W
R359	1-216-639-11	s	METAL, CHIP 330 0.5% 1/10W
R360	1-216-073-00	s	METAL, CHIP 10k 5% 1/10W
R361	1-216-041-00	s	METAL, CHIP 470 5% 1/10W
R362	1-216-049-91	s	METAL, CHIP 1k 5% 1/10W
R363	1-208-775-11	s	METAL, CHIP 510 0.5% 1/10W
R364	1-216-045-00	s	METAL, CHIP 680 5% 1/10W
R365	1-216-295-91	s	RES, CHIP 0
R366	1-216-639-11	s	METAL, CHIP 330 0.5% 1/10W
R367	1-216-065-00	s	METAL, CHIP 4.7k 5% 1/10W
R368	1-216-017-91	s	METAL, CHIP 47 5% 1/10W
R369	1-216-635-11	s	METAL, CHIP 220 0.5% 1/10W
R370	1-216-647-11	s	METAL, CHIP 680 0.5% 1/10W
R371	1-216-651-11	s	METAL, CHIP 1k 0.5% 1/10W
R372	1-216-025-91	s	METAL, CHIP 100 5% 1/10W
R374	1-216-041-00	s	METAL, CHIP 470 5% 1/10W
R377	1-208-775-11	s	METAL, CHIP 510 0.5% 1/10W
R378	1-216-073-00	s	METAL, CHIP 10k 5% 1/10W
R379	1-216-049-91	s	METAL, CHIP 1k [illegible] 1/10W

(DA-95A BOARD(ES-7(CE)))

Ref. No. or Q'ty	Part No.	SP	Description
R382	1-216-295-91	s	RES, CHIP 0
R383	1-216-025-91	s	METAL, CHIP 100 5% 1/10W
R400	1-216-017-91	s	METAL, CHIP 47 5% 1/10W
R401	1-216-057-00	s	METAL, CHIP 2.2k 5% 1/10W
R402	1-216-017-91	s	METAL, CHIP 47 5% 1/10W
R403	1-216-045-00	■	METAL, CHIP 680 5% 1/10W
R404	1-216-025-91	s	METAL, CHIP 100 5% 1/10W
R405	1-216-057-00	s	METAL, CHIP 2.2k 5% 1/10W
R406	1-216-049-91	■	METAL, CHIP 1k 5% 1/10W
R407	1-219-369-11	s	METAL, CHIP 1.4k 0.1% 1/10W
R408	1-219-370-11	s	METAL, CHIP 2.91k 0.1% 1/10W
R409	1-216-081-00	s	METAL, CHIP 22k [illegible] 1/10W
R410	1-216-049-91	s	METAL, CHIP 1k 5% 1/10W
R411	1-216-017-91	s	METAL, CHIP 47 5% 1/10W
R412	1-216-041-00	■	METAL, CHIP 470 5% 1/10W
R413	1-216-033-00	s	METAL, CHIP 220 5% 1/10W
R414	1-216-051-00	s	METAL, CHIP 1.2k [illegible] 1/10W
R415	1-216-041-00	■	METAL, CHIP 470 5% 1/10W
R416	1-216-057-00	■	METAL, CHIP 2.2k [illegible] 1/10W
R417	1-216-033-00	■	METAL, CHIP 220 5% 1/10W
R419	1-216-053-00	s	METAL, CHIP 1.5k 5% 1/10W
R422	1-216-049-91	s	METAL, CHIP 1k [illegible] 1/10W
R423	1-216-049-91	■	METAL, CHIP 1k [illegible] 1/10W
R424	1-216-009-00	s	METAL, CHIP 22 5% 1/10W
R425	1-216-051-00	s	METAL, CHIP 1.2k 5% 1/10W
R426	1-216-049-91	s	METAL, CHIP 1k 5% 1/10W
R427	1-216-049-91	s	METAL, CHIP 1k 5% 1/10W
R428	1-216-065-00	s	METAL, CHIP 4.7k 5% 1/10W
R429	1-216-079-00	s	METAL, CHIP 18k [illegible] 1/10W
R430	1-216-017-91	s	METAL, CHIP 47 5% 1/10W
R431	1-216-049-91	s	METAL, CHIP 1k 5% 1/10W
R432	1-216-049-91	s	METAL, CHIP 1k [illegible] 1/10W
R433	1-216-033-00	s	METAL, CHIP 220 5% 1/10W
R434	1-216-049-91	■	METAL, CHIP 1k [illegible] 1/10W
R435	1-216-065-00	s	METAL, CHIP 4.7k 5% 1/10W
R436	1-216-631-11	s	METAL, CHIP 150 0.5% 1/10W
R437	1-216-057-00	s	METAL, CHIP 2.2k 5% 1/10W
R440	1-216-049-91	s	METAL, CHIP 1k [illegible] 1/10W
R441	1-216-049-91	s	METAL, CHIP 1k [illegible] 1/10W
R442	1-216-017-91	■	METAL, CHIP 47 5% 1/10W
R443	1-216-049-91	s	METAL, CHIP 1k 5% 1/10W
R444	1-216-049-91	s	METAL, CHIP 1k 5% 1/10W
R445	1-216-033-00	s	METAL, CHIP 220 5% 1/10W
R446	1-216-049-91	s	METAL, CHIP 1k 5% 1/10W
R447	1-216-073-00	s	METAL, CHIP 10k 5% 1/10W
R448	1-216-057-00	s	METAL, CHIP 2.2k [illegible] 1/10W
R449	1-216-049-91	s	METAL, CHIP 1k [illegible] 1/10W
R450	1-216-025-91	s	METAL, CHIP 100 5% 1/10W
R451	1-216-025-91	s	METAL, CHIP 100 5% 1/10W
R453	1-216-631-11	s	METAL, CHIP 150 0.5% 1/10W
R454	1-216-631-11	s	METAL, CHIP 150 0.5% 1/10W
R455	1-216-627-91	s	METAL, CHIP 100 5% 1/10W
R457	1-216-631-11	s	METAL, CHIP 150 0.5% 1/10W
R458	1-216-631-11	s	METAL, CHIP 150 0.5% 1/10W
R459	1-216-017-91	s	METAL, CHIP 47 5% 1/10W
R460	1-216-057-00	s	METAL, CHIP 2.2k [illegible] 1/10W
R461	1-216-017-91	s	METAL, CHIP 47 5% 1/10W
R462	1-216-045-00	■	METAL, CHIP 680 5% 1/10W
R463	1-216-057-00	s	METAL, CHIP 2.2k 5% 1/10W

(DA-95A BOARD(ES-7(CE)))

Ref. No. or Q'ty	Part No.	SP	Description
R464	1-216-049-91	s	METAL, CHIP 1k 1/10W
R465	1-218-177-11	s	METAL, CHIP 1001 0.1% 1/16W
R466	1-219-368-11	s	METAL, CHIP 713.4 0.1% 1/10W
R467	1-216-017-91	s	METAL, CHIP 47 1/10W
R468	1-216-041-00	s	METAL, CHIP 470 5% 1/10W
R469	1-216-041-00	s	METAL, CHIP 470 5% 1/10W
R470	1-216-057-00	s	METAL, CHIP 2.2k 5% 1/10W
R471	1-216-041-00	s	METAL, CHIP 470 1/10W
R472	1-216-057-00	s	METAL, CHIP 2.2k 5% 1/10W
R473	1-216-033-00	s	METAL, CHIP 220 5% 1/10W
R475	1-216-053-00	s	METAL, CHIP 1.5k 5% 1/10W
R478	1-216-049-91	s	METAL, CHIP 1k 5% 1/10W
R479	1-216-049-91	s	METAL, CHIP 1k 1/10W
R480	1-216-009-00	s	METAL, CHIP 22 5% 1/10W
R481	1-216-051-00	s	METAL, CHIP 1.2k 5% 1/10W
R482	1-216-049-91	s	METAL, CHIP 1k 5% 1/10W
R484	1-216-025-91	s	METAL, CHIP 100 5% 1/10W
R485	1-216-025-91	s	METAL, CHIP 100 5% 1/10W
R487	1-216-025-91	s	METAL, CHIP 100 5% 1/10W
R490	1-216-631-11	s	METAL, CHIP 150 0.5% 1/10W
R491	1-216-631-11	s	METAL, CHIP 150 0.5% 1/10W
R494	1-216-627-91	s	METAL, CHIP 100 5% 1/10W
R496	1-216-631-11	s	METAL, CHIP 150 0.5% 1/10W
R497	1-216-631-11	s	METAL, CHIP 150 0.5% 1/10W
R498	1-216-017-91	s	METAL, CHIP 47 5% 1/10W
R499	1-216-057-00	s	METAL, CHIP 2.2k 5% 1/10W
R500	1-216-017-91	s	METAL, CHIP 47 5% 1/10W
R501	1-216-045-00	s	METAL, CHIP 680 1/10W
R502	1-218-177-11	s	METAL, CHIP 1001 0.1% 1/16W
R503	1-219-367-11	s	METAL, CHIP 564.3 0.1% 1/10W
R504	1-216-017-91	s	METAL, CHIP 47 5% 1/10W
R505	1-216-039-00	s	METAL, CHIP 390 5% 1/10W
R506	1-216-041-00	s	METAL, CHIP 470 5% 1/10W
R507	1-216-057-00	s	METAL, CHIP 2.2k 5% 1/10W
R508	1-216-039-00	s	METAL, CHIP 390 5% 1/10W
R509	1-216-057-00	s	METAL, CHIP 2.2k 5% 1/10W
R510	1-216-033-00	s	METAL, CHIP 220 5% 1/10W
R511	1-216-053-00	s	METAL, CHIP 1.5k 5% 1/10W
R515	1-216-049-91	s	METAL, CHIP 1k 1/10W
R516	1-216-073-00	s	METAL, CHIP 10k 5% 1/10W
R517	1-216-049-91	s	METAL, CHIP 1k 1/10W
R518	1-216-049-91	s	METAL, CHIP 1k 1/10W
R519	1-216-009-00	s	METAL, CHIP 22 1/10W
R520	1-216-051-00	s	METAL, CHIP 1.2k 5% 1/10W
R521	1-216-049-91	s	METAL, CHIP 1k 5% 1/10W
R523	1-216-025-91	s	METAL, CHIP 100 5% 1/10W
R524	1-216-025-91	s	METAL, CHIP 100 5% 1/10W
R526	1-216-025-91	s	METAL, CHIP 100 1/10W
R529	1-216-631-11	s	METAL, CHIP 150 0.5% 1/10W
R530	1-216-631-11	s	METAL, CHIP 150 0.5% 1/10W
R531	1-216-627-91	s	METAL, CHIP 100 5% 1/10W
R533	1-216-631-11	s	METAL, CHIP 150 0.5% 1/10W
R534	1-216-631-11	s	METAL, CHIP 150 0.5% 1/10W
R536	1-208-789-11	s	METAL, CHIP 2k 0.5% 1/10W
R537	1-216-651-11	s	METAL, CHIP 1k 0.5% 1/10W
R538	1-216-659-11	s	METAL, CHIP 2.2k 0.5% 1/10W
R539	1-216-635-11	s	METAL, CHIP 220 0.5% 1/10W
R540	1-216-659-11	s	METAL, CHIP 2.2k 0.5% 1/10W
R541	1-216-049-91	s	METAL, CHIP 1k 5% 1/10W

(DA-95A BOARD(ES-7(CE)))

Ref. No. or Q'ty	Part No.	SP	Description
R542	1-216-049-91	s	METAL, CHIP 1k 1/10W
R543	1-216-009-00	s	METAL, CHIP 22 5% 1/10W
R544	1-216-633-11	s	METAL, CHIP 180 0.5% 1/10W
R545	1-216-057-00	s	METAL, CHIP 2.2k 5% 1/10W
R546	1-216-025-91	s	METAL, CHIP 100 5% 1/10W
R547	1-216-025-91	s	METAL, CHIP 100 5% 1/10W
R550	1-216-057-00	s	METAL, CHIP 2.2k 5% 1/10W
R551	1-216-033-00	s	METAL, CHIP 220 5% 1/10W
R553	1-216-049-91	s	METAL, CHIP 1k 5% 1/10W
R554	1-216-065-00	s	METAL, CHIP 4.7k 5% 1/10W
R555	1-216-049-91	s	METAL, CHIP 1k 5% 1/10W
R556	1-216-017-91	s	METAL, CHIP 47 1/10W
R557	1-216-057-00	s	METAL, CHIP 2.2k 5% 1/10W
R558	1-216-017-91	s	METAL, CHIP 47 5% 1/10W
R559	1-216-057-00	s	METAL, CHIP 2.2k 5% 1/10W
R561	1-216-025-91	s	METAL, CHIP 100 1/10W
R562	1-216-067-00	s	METAL, CHIP 5.6k 1/10W
R563	1-216-049-91	s	METAL, CHIP 1k 5% 1/10W
R564	1-216-063-91	s	METAL, CHIP 3.9k 5% 1/10W
R565	1-216-041-00	s	METAL, CHIP 470 5% 1/10W
R566	1-216-061-00	s	METAL, CHIP 3.3k 5% 1/10W
R567	1-216-057-00	s	METAL, CHIP 2.2k 5% 1/10W
R568	1-216-049-91	s	METAL, CHIP 1k 1/10W
R569	1-216-067-00	s	METAL, CHIP 5.6k 5% 1/10W
R570	1-216-073-00	s	METAL, CHIP 10k 5% 1/10W
R571	1-216-057-00	s	METAL, CHIP 2.2k 5% 1/10W
R572	1-216-017-91	s	METAL, CHIP 47 1/10W
R573	1-216-017-91	s	METAL, CHIP 47 5% 1/10W
R574	1-216-631-11	s	METAL, CHIP 150 0.5% 1/10W
R575	1-216-631-11	s	METAL, CHIP 150 0.5% 1/10W
R576	1-216-049-91	s	METAL, CHIP 1k 5% 1/10W
R577	1-216-067-00	s	METAL, CHIP 5.6k 5% 1/10W
R578	1-216-073-00	s	METAL, CHIP 10k 5% 1/10W
R579	1-216-057-00	s	METAL, CHIP 2.2k 5% 1/10W
R580	1-216-017-91	s	METAL, CHIP 47 5% 1/10W
R581	1-216-017-91	s	METAL, CHIP 47 5% 1/10W
R582	1-216-631-11	s	METAL, CHIP 150 0.5% 1/10W
R583	1-216-631-11	s	METAL, CHIP 150 0.5% 1/10W
R584	1-216-049-91	s	METAL, CHIP 1k 5% 1/10W
R600	1-216-017-91	s	METAL, CHIP 47 5% 1/10W
R601	1-216-057-00	s	METAL, CHIP 2.2k 5% 1/10W
R602	1-216-017-91	s	METAL, CHIP 47 1/10W
R603	1-216-650-11	s	METAL, CHIP 910 0.5% 1/10W
R604	1-216-651-91	s	METAL, CHIP 1k 5% 1/10W
R605	1-216-023-00	s	METAL, CHIP 82 5% 1/10W
R606	1-216-667-11	s	METAL, CHIP 4.7k 0.5% 1/10W
R610	1-216-667-11	s	METAL, CHIP 4.7k 0.5% 1/10W
R617	1-216-033-00	s	METAL, CHIP 220 1/10W
R619	1-216-017-91	s	METAL, CHIP 47 5% 1/10W
R621	1-216-647-91	s	METAL, CHIP 680 5% 1/10W
R622	1-216-033-00	s	METAL, CHIP 220 5% 1/10W
R623-628	1-216-631-11	s	METAL, CHIP 150 0.5% 1/10W
R629	1-216-649-91	s	METAL, CHIP 820 5% 1/10W
R630	1-216-627-91	s	METAL, CHIP 100 1/10W
R631	1-216-651-91	s	METAL, CHIP 1k 1/10W
R632	1-216-057-00	s	METAL, CHIP 2.2k 5% 1/10W
R633	1-216-025-91	s	METAL, CHIP 100 5% 1/10W
R634	1-216-650-11	s	METAL, CHIP 910 0.5% 1/10W
R635	1-216-021-00	s	METAL, CHIP 68 1/10W

(DA-95A BOARD(ES-7(CE)))

Ref. No. or Q'ty	Part No.	SP	Description
R636	1-216-651-91	s	METAL, CHIP 1k 5% 1/10W
R637	1-216-073-00	s	METAL, CHIP 10k 5% 1/10W
R638	1-216-057-00	s	METAL, CHIP 2.2k [illegible] 1/10W
R639	1-216-650-11	s	METAL, CHIP 910 0.5% 1/10W
R640	1-216-021-00	s	METAL, CHIP 68 5% 1/10W
R641	1-216-651-91	s	METAL, CHIP 1k 5% 1/10W
R642	1-216-017-91	s	METAL, CHIP 47 5% 1/10W
R643	1-216-651-11	s	METAL, CHIP 1k 0.5% 1/10W
R644	1-216-049-91	s	METAL, CHIP 1k 5% 1/10W
R645	1-216-025-91	s	METAL, CHIP 100 5% 1/10W
R646	1-216-651-11	s	METAL, CHIP 1k 0.5% 1/10W
R647	1-216-651-11	s	METAL, CHIP 1k 0.5% 1/10W
R648	1-216-647-11	s	METAL, CHIP 680 0.5% 1/10W
R649	1-216-295-91	s	RES, CHIP 0
R650	1-216-651-11	s	METAL, CHIP 1k 0.5% 1/10W
R651	1-216-651-11	s	METAL, CHIP 1k 0.5% 1/10W
R652	1-216-025-91	[illegible]	METAL, CHIP 100 5% 1/10W
R653	1-216-057-00	s	METAL, CHIP 2.2k 5% 1/10W
R654	1-216-057-00	s	METAL, CHIP 2.2k 5% 1/10W
R656	1-216-295-91	s	RES, CHIP 0
R657	1-216-065-00	s	METAL, CHIP 4.7k 5% 1/10W
R658	1-216-053-00	s	METAL, CHIP 1.5k 5% 1/10W
R659	1-216-057-00	s	METAL, CHIP 2.2k 5% 1/10W
R660	1-216-025-91	s	METAL, CHIP 100 5% 1/10W
R661	1-216-061-00	s	METAL, CHIP 3.3k 5% 1/10W
R662	1-216-029-00	[illegible]	METAL, CHIP 150 5% 1/10W
R663	1-216-057-00	[illegible]	METAL, CHIP 2.2k 5% 1/10W
R664	1-216-049-91	s	METAL, CHIP 1k 5% 1/10W
R665	1-216-009-00	s	METAL, CHIP 22 5% 1/10W
R666	1-216-089-91	s	METAL, CHIP 47k 5% 1/10W
R667	1-216-069-00	s	METAL, CHIP 6.8k 5% 1/10W
R668	1-216-069-00	s	METAL, CHIP 6.8k 5% 1/10W
R669	1-216-017-91	s	METAL, CHIP 47 5% 1/10W
R670	1-216-651-11	s	METAL, CHIP 1k 0.5% 1/10W
R671	1-216-049-91	s	METAL, CHIP 1k 5% 1/10W
R672	1-216-025-91	s	METAL, CHIP 100 5% 1/10W
R673	1-216-651-11	s	METAL, CHIP 1k 0.5% 1/10W
R674	1-216-651-11	s	METAL, CHIP 1k 0.5% 1/10W
R675	1-216-647-11	s	METAL, CHIP 680 0.5% 1/10W
R676	1-216-295-91	s	RES, CHIP 0
R677	1-216-651-11	s	METAL, CHIP 1k 0.5% 1/10W
R678	1-216-651-11	s	METAL, CHIP 1k 0.5% 1/10W
R679	1-216-025-91	[illegible]	METAL, CHIP 100 [illegible] 1/10W
R680	1-216-025-91	s	METAL, CHIP 100 5% 1/10W
R681	1-216-057-00	[illegible]	METAL, CHIP 2.2k [illegible] 1/10W
R682	1-216-057-00	s	METAL, CHIP 2.2k 5% 1/10W
R683	1-216-651-11	s	METAL, CHIP 1k 0.5% 1/10W
R684	1-216-065-00	s	METAL, CHIP 4.7k [illegible] 1/10W
R685	1-216-629-11	s	METAL, CHIP 120 0.5% 1/10W
R686	1-216-057-00	s	METAL, CHIP 2.2k 5% 1/10W
R687	1-216-061-00	s	METAL, CHIP 3.3k 5% 1/10W
R688	1-216-025-91	s	METAL, CHIP 100 5% 1/10W
R689	1-216-029-00	s	METAL, CHIP 150 5% 1/10W
R690	1-216-057-00	s	METAL, CHIP 2.2k 5% 1/10W
R691	1-216-049-91	s	METAL, CHIP 1k [illegible] 1/10W
R692	1-216-049-91	s	METAL, CHIP 1k 5% 1/10W
R693	1-216-009-00	s	METAL, CHIP 22 5% 1/10W
R694	1-216-699-11	s	METAL, CHIP 100k 0.5% 1/10W
R695	1-216-069-00	s	METAL, CHIP 6.8k 5% 1/10W

(DA-95A BOARD(ES-7(CE)))

Ref. No. or Q'ty	Part No.	SP	Description
R696	1-216-069-00	[illegible]	METAL, CHIP 6.8k 5% 1/10W
R697	1-216-089-91	s	METAL, CHIP 47k 5% 1/10W
R698	1-216-067-00	s	METAL, CHIP 5.6k 5% 1/10W
R699	1-216-651-11	s	METAL, CHIP 1k 0.5% 1/10W
R700	1-216-295-91	[illegible]	RES, CHIP 0
R701	1-216-651-11	s	METAL, CHIP 1k 0.5% 1/10W
R702	1-208-775-11	s	METAL, CHIP 510 0.5% 1/10W
R703	1-216-057-00	s	METAL, CHIP 2.2k 5% 1/10W
R704	1-216-017-91	[illegible]	METAL, CHIP 47 5% 1/10W
R705	1-216-613-91	s	METAL, CHIP 27 5% 1/10W
R706	1-216-017-91	[illegible]	METAL, CHIP 47 5% 1/10W
R707	1-216-017-91	s	METAL, CHIP 47 5% 1/10W
R710	1-216-019-00	[illegible]	METAL, CHIP 56 5% 1/10W
R710	1-216-023-00	s	METAL, CHIP 82 5% 1/10W
R711	1-216-025-91	s	METAL, CHIP 100 5% 1/10W
R713	1-216-049-91	s	METAL, CHIP 1k 5% 1/10W
R714	1-216-073-00	s	METAL, CHIP 10k 5% 1/10W
R715	1-216-057-00	[illegible]	METAL, CHIP 2.2k 5% 1/10W
R716	1-216-025-91	s	METAL, CHIP 100 5% 1/10W
R717	1-216-651-91	s	METAL, CHIP 1k 5% 1/10W
R718	1-216-651-91	[illegible]	METAL, CHIP 1k 5% 1/10W
R719	1-216-650-11	s	METAL, CHIP 910 0.5% 1/10W
R720	1-216-651-91	s	METAL, CHIP 1k 5% 1/10W
R721	1-216-651-11	s	METAL, CHIP 1k 0.5% 1/10W
R722	1-216-057-00	s	METAL, CHIP 2.2k 5% 1/10W
R723	1-216-651-11	s	METAL, CHIP 1k 0.5% 1/10W
R724	1-216-049-91	s	METAL, CHIP 1k 5% 1/10W
R725	1-216-627-11	s	METAL, CHIP 100 0.5% 1/10W
R726	1-216-661-11	[illegible]	METAL, CHIP 2.7k 0.5% 1/10W
R728	1-216-051-00	s	METAL, CHIP 1.2k 5% 1/10W
R730	1-216-295-91	s	RES, CHIP 0
R731	1-216-642-11	s	METAL, CHIP 430 0.5% 1/10W
R733	1-216-051-00	[illegible]	METAL, CHIP 1.2k 5% 1/10W
R735	1-216-049-91	s	METAL, CHIP 1k [illegible] 1/10W
R736	1-216-041-00	s	METAL, CHIP 470 5% 1/10W
R737	1-216-073-00	s	METAL, CHIP 10k 5% 1/10W
R738	1-216-057-00	s	METAL, CHIP 2.2k 5% 1/10W
R739	1-216-049-91	s	METAL, CHIP 1k 5% 1/10W
R740	1-216-033-00	s	METAL, CHIP 220 5% 1/10W
R741	1-216-065-00	s	METAL, CHIP 4.7k 5% 1/10W
R742	1-216-073-00	s	METAL, CHIP 10k 5% 1/10W
R743	1-216-065-00	[illegible]	METAL, CHIP 4.7k 5% 1/10W
R744	1-216-065-00	s	METAL, CHIP 4.7k 5% 1/10W
R746	1-216-295-91	[illegible]	RES, CHIP 0
R747	1-216-295-91	s	RES, CHIP 0
R748	1-216-295-91	[illegible]	RES, CHIP 0
R750	1-216-065-00	s	METAL, CHIP 4.7k 5% 1/10W
R751	1-216-065-00	s	METAL, CHIP 4.7k 5% 1/10W
R752	1-216-057-00	s	METAL, CHIP 2.2k 5% 1/10W
R753	1-216-073-00	[illegible]	METAL, CHIP 10k 5% 1/10W
R754	1-216-085-00	s	METAL, CHIP 33k 5% 1/10W
R755	1-216-081-00	s	METAL, CHIP 22k 5% 1/10W
R756	1-216-049-91	s	METAL, CHIP 1k 5% 1/10W
R757	1-216-073-00	s	METAL, CHIP 10k [illegible] 1/10W
R758	1-216-025-91	s	METAL, CHIP 100 5% 1/10W
R759	1-216-057-00	s	METAL, CHIP 2.2k 5% 1/10W
R760	1-216-049-91	s	METAL, CHIP 1k 5% 1/10W
R761	1-216-073-00	[illegible]	METAL, CHIP 10k 5% 1/10W
R762	1-216-073-00	[illegible]	METAL, CHIP 10k 5% 1/10W

(DA-95A BOARD(ES-7(CE)))

Ref. No. or Q'ty	Part No.	SP	Description
R763	1-216-073-00	s	METAL, CHIP 10k 5% 1/10W
R764	1-216-049-91	s	METAL, CHIP 1k [illegible] 1/10W
R765	1-216-049-91	■	METAL, CHIP 1k 5% 1/10W
R766	1-216-065-00	s	METAL, CHIP 4.7k 5% 1/10W
R767	1-216-057-00	■	METAL, CHIP 2.2k 5% 1/10W
R768	1-216-651-11	s	METAL, CHIP 1k 0.5% 1/10W
R769	1-216-295-91	s	RES, CHIP 0
R770	1-216-651-11	s	METAL, CHIP 1k 0.5% 1/10W
R771	1-216-057-00	s	METAL, CHIP 2.2k 5% 1/10W
R772	1-216-648-91	s	METAL, CHIP 750 0.5% 1/10W
R773	1-208-771-11	s	METAL, CHIP 360 0.5% 1/10W
R774	1-216-057-00	s	METAL, CHIP 2.2k 5% 1/10W
R775	1-216-049-91	s	METAL, CHIP 1k [illegible] 1/10W
R776	1-216-057-00	s	METAL, CHIP 2.2k 5% 1/10W
R779	1-216-057-00	■	METAL, CHIP 2.2k 5% 1/10W
R780-785	1-216-025-91	s	METAL, CHIP 100 [illegible] 1/10W
R786	1-216-057-00	■	METAL, CHIP 2.2k 5% 1/10W
R787	1-216-065-00	s	METAL, CHIP 4.7k 5% 1/10W
R789	1-216-057-00	s	METAL, CHIP 2.2k 5% 1/10W
R790	1-216-057-00	■	METAL, CHIP 2.2k 5% 1/10W
R791	1-216-652-11	s	METAL, CHIP 1.1k 0.5% 1/10W
R792	1-216-057-00	s	METAL, CHIP 2.2k 5% 1/10W
R793	1-216-053-00	s	METAL, CHIP 1.5k 5% 1/10W
R794	1-216-069-00	s	METAL, CHIP 6.8k 5% 1/10W
R796	1-216-033-00	■	METAL, CHIP 220 5% 1/10W
R797	1-216-049-91	s	METAL, CHIP 1k 5% 1/10W
R798	1-216-045-00	s	METAL, CHIP 680 5% 1/10W
R799	1-216-049-91	■	METAL, CHIP 1k 5% 1/10W
R800	1-216-057-00	■	METAL, CHIP 2.2k 5% 1/10W
R801	1-216-049-91	s	METAL, CHIP 1k 5% 1/10W
R802	1-216-049-91	s	METAL, CHIP 1k 5% 1/10W
R803	1-216-651-11	■	METAL, CHIP 1k 0.5% 1/10W
R804	1-216-295-91	s	RES, CHIP 0
R805	1-216-049-91	s	METAL, CHIP 1k 5% 1/10W
R806	1-216-631-11	■	METAL, CHIP 150 0.5% 1/10W
R807	1-208-789-11	s	METAL, CHIP 2k 0.5% 1/10W
R808	1-216-049-91	s	METAL, CHIP 1k 5% 1/10W
R810	1-216-025-91	s	METAL, CHIP 100 5% 1/10W
R811	1-216-049-91	s	METAL, CHIP 1k 5% 1/10W
R814	1-216-049-91	s	METAL, CHIP 1k 5% 1/10W
R815	1-216-049-91	s	METAL, CHIP 1k 5% 1/10W
R817	1-216-049-91	■	METAL, CHIP 1k 5% 1/10W
R818	1-216-049-91	s	METAL, CHIP 1k 5% 1/10W
R819	1-216-009-00	s	METAL, CHIP 22 5% 1/10W
R820	1-208-822-11	s	METAL, CHIP 47k 0.5% 1/10W
R823	1-216-049-91	s	METAL, CHIP 1k [illegible] 1/10W
R824	1-216-049-91	s	METAL, CHIP 1k [illegible] 1/10W
R825	1-216-009-00	s	METAL, CHIP 22 [illegible] 1/10W
R826	1-216-699-11	s	METAL, CHIP 100k 0.5% 1/10W
R827	1-216-049-91	s	METAL, CHIP 1k 5% 1/10W
R828	1-216-049-91	s	METAL, CHIP 1k 5% 1/10W
R831	1-216-089-91	■	METAL, CHIP 47k 5% 1/10W
R832	1-216-067-00	s	METAL, CHIP 5.6k 5% 1/10W
R833	1-216-651-11	s	METAL, CHIP 1k 0.5% 1/10W
R834	1-216-651-11	s	METAL, CHIP 1k 0.5% 1/10W
R835	1-216-295-91	s	RES, CHIP 0
R836	1-216-057-00	■	METAL, CHIP 2.2k 5% 1/10W
R837	1-216-033-00	s	METAL, CHIP 220 5% 1/10W
R838	1-216-073-00	s	METAL, CHIP 10k 5% 1/10W

(DA-95A BOARD(ES-7(CE)))

Ref. No. or Q'ty	Part No.	SP	Description
R839	1-216-065-00	s	METAL, CHIP 4.7k 5% 1/10W
R840	1-216-295-91	s	RES, CHIP 0
R841	1-216-295-91	s	RES, CHIP 0
R844	1-216-065-00	s	METAL, CHIP 4.7k 5% 1/10W
R846	1-216-065-00	s	METAL, CHIP 4.7k [illegible] 1/10W
R847	1-216-065-00	s	METAL, CHIP 4.7k 5% 1/10W
R848	1-216-065-00	s	METAL, CHIP 4.7k 5% 1/10W
R849	1-216-057-00	■	METAL, CHIP 2.2k 5% 1/10W
R850	1-216-073-00	■	METAL, CHIP 10k 5% 1/10W
R851	1-216-085-00	s	METAL, CHIP 33k 5% 1/10W
R852	1-216-081-00	s	METAL, CHIP 22k [illegible] 1/10W
R853	1-216-049-91	s	METAL, CHIP 1k 5% 1/10W
R854	1-216-073-00	s	METAL, CHIP 10k [illegible] 1/10W
R855	1-216-025-91	s	METAL, CHIP 100 [illegible] 1/10W
R856	1-216-057-00	■	METAL, CHIP 2.2k [illegible] 1/10W
R857	1-216-049-91	s	METAL, CHIP 1k 5% 1/10W
R858	1-216-073-00	■	METAL, CHIP 10k 5% 1/10W
R859	1-216-073-00	s	METAL, CHIP 10k 5% 1/10W
R860	1-216-073-00	s	METAL, CHIP 10k 5% 1/10W
R861	1-216-049-91	■	METAL, CHIP 1k [illegible] 1/10W
R862	1-216-049-91	s	METAL, CHIP 1k [illegible] 1/10W
R863	1-216-065-00	s	METAL, CHIP 4.7k 5% 1/10W
R864	1-216-057-00	s	METAL, CHIP 2.2k 5% 1/10W
R865	1-216-651-11	s	METAL, CHIP 1k 0.5% 1/10W
R866	1-216-651-11	s	METAL, CHIP 1k 0.5% 1/10W
R867	1-216-295-91	s	RES, CHIP 0
R868	1-216-057-00	s	METAL, CHIP 2.2k 5% 1/10W
R869	1-216-647-11	■	METAL, CHIP 680 0.5% 1/10W
R870	1-208-771-11	s	METAL, CHIP 360 0.5% 1/10W
R871	1-216-057-00	■	METAL, CHIP 2.2k 5% 1/10W
R872	1-216-057-00	■	METAL, CHIP 2.2k 5% 1/10W
R873	1-216-049-91	■	METAL, CHIP 1k 5% 1/10W
R874	1-216-055-00	s	METAL, CHIP 1.8k 5% 1/10W
R875	1-216-629-11	s	METAL, CHIP 120 0.5% 1/10W
R876	1-216-057-00	■	METAL, CHIP 2.2k 5% 1/10W
R878	1-216-057-00	s	METAL, CHIP 2.2k 5% 1/10W
R879	1-216-049-91	s	METAL, CHIP 1k 5% 1/10W
R880	1-216-651-11	■	METAL, CHIP 1k 0.5% 1/10W
R881	1-216-651-11	s	METAL, CHIP 1k 0.5% 1/10W
R882	1-216-025-91	s	METAL, CHIP 100 5% 1/10W
R883	1-216-057-00	■	METAL, CHIP 2.2k 5% 1/10W
R885	1-216-047-91	s	METAL, CHIP 820 5% 1/10W
R886	1-216-049-91	s	METAL, CHIP 1k 5% 1/10W
R889	1-216-049-91	s	METAL, CHIP 1k 5% 1/10W
R890	1-216-057-00	s	METAL, CHIP 2.2k [illegible] 1/10W
R891	1-216-051-00	s	METAL, CHIP 1.2k 5% 1/10W
R892	1-208-774-11	s	METAL, CHIP 470 0.5% 1/10W
R893	1-216-651-11	■	METAL, CHIP 1k 0.5% 1/10W
R894	1-216-025-91	s	METAL, CHIP 100 5% 1/10W
R895	1-216-647-11	s	METAL, CHIP 680 0.5% 1/10W
R896	1-216-045-00	s	METAL, CHIP 680 [illegible] 1/10W
R897	1-216-073-00	s	METAL, CHIP 10k [illegible] 1/10W
R898	1-216-631-11	s	METAL, CHIP 150 0.5% 1/10W
R899	1-216-631-11	s	METAL, CHIP 150 0.5% 1/10W
R900	1-216-049-91	s	METAL, CHIP 1k 5% 1/10W
R901	1-216-059-00	s	METAL, CHIP 2.7k 5% 1/10W
R902	1-216-057-00	s	METAL, CHIP 2.2k 5% 1/10W
R903	1-208-817-11	s	METAL, CHIP 30k 0.5% 1/10W
R904	1-216-073-00	s	METAL, CHIP 10k 5% 1/10W

(DA-95A BOARD(ES-7(CE)))

Ref. No. or Q'ty	Part No.	SP	Description
R906	1-216-017-91	s	METAL, CHIP 47 5% 1/10W
R907	1-216-017-91	s	METAL, CHIP 47 5% 1/10W
R908-923	1-216-631-11	s	METAL, CHIP 150 0.5% 1/10W
R924	1-216-049-91	s	METAL, CHIP 1k 5% 1/10W
R926	1-216-295-91	s	RES, CHIP 0
R927	1-216-041-00	s	METAL, CHIP 470 5% 1/10W
RB102	1-239-426-11	■	RESISTOR BLOCK, CHIP 2.2kx4
RB300	1-239-426-11	■	RESISTOR BLOCK, CHIP 2.2kx4
RB301	1-239-426-11	s	RESISTOR BLOCK, CHIP 2.2kx4
RB302	1-239-426-11	s	RESISTOR BLOCK, CHIP 2.2kx4
RB303	1-239-426-11	s	RESISTOR BLOCK, CHIP 2.2kx4
RB902	1-239-426-11	■	RESISTOR BLOCK, CHIP 2.2kx4
RB903	1-239-426-11	s	RESISTOR BLOCK, CHIP 2.2kx4
RB906	1-239-426-11	s	RESISTOR BLOCK, CHIP 2.2kx4
RB907	1-239-426-11	s	RESISTOR BLOCK, CHIP 2.2kx4
RV100	1-237-500-21	s	RES, ADJ, METAL 1k
RV102	1-241-760-11	s	RES, ADJ, METAL 470
RV300	1-241-761-11	■	RES, ADJ, METAL 1k
RV301	1-241-759-21	s	RES, ADJ, METAL 220
RV302	1-241-761-11	■	RES, ADJ, METAL 1k
RV303	1-241-759-21	■	RES, ADJ, METAL 220
RV401	1-241-759-21	s	RES, ADJ, METAL 220
RV402	1-241-759-21	s	RES, ADJ, METAL 220
RV403	1-241-759-21	s	RES, ADJ, METAL 220
RV404	1-241-758-11	s	RES, ADJ, METAL 100
RV405	1-241-759-21	s	RES, ADJ, METAL 220
RV406	1-241-758-11	s	RES, ADJ, METAL 100
RV409	1-241-760-11	s	RES, ADJ, METAL 470
RV410	1-241-760-11	s	RES, ADJ, METAL 470
RV604	1-241-760-11	s	RES, ADJ, METAL 470
RV605	1-241-763-11	s	RES, ADJ, METAL 4.7k
RV606	1-241-763-11	s	RES, ADJ, METAL 4.7k
RV607	1-241-759-21	s	RES, ADJ, METAL 220
RV608	1-241-759-21	s	RES, ADJ, METAL 220
RV609	1-241-760-11	■	RES, ADJ, METAL 470
RV610	1-241-760-11	s	RES, ADJ, METAL 470
RV611	1-237-501-21	s	RES, ADJ, METAL 2k
RV612	1-241-762-11	s	RES, ADJ, METAL 2.2k
RV613	1-241-763-11	s	RES, ADJ, METAL 4.7k
RV800	1-241-760-11	s	RES, ADJ, METAL 470
RV801	1-241-760-11	s	RES, ADJ, METAL 470
RV804	1-237-501-21	s	RES, ADJ, METAL 2k
RV805	1-241-762-11	■	RES, ADJ, METAL 2.2k
RV807	1-241-760-11	s	RES, ADJ, METAL 470
S100	1-571-098-11	s	SWITCH, SLIDE
S101	1-553-925-00	s	SWITCH, DIGITAL
S102	1-553-925-00	s	SWITCH, DIGITAL
S103	1-553-925-00	s	SWITCH, DIGITAL
S600	1-554-399-00	s	SWITCH, TOGGLE
S601	1-570-373-12	s	SWITCH, SLIDE
S801	1-570-373-12	s	SWITCH, SLIDE
X100	1-760-266-11	s	VCO, CRYSTAL 14.1875MHz
X101	1-760-268-11	s	VCO, CRYSTAL 17.734475MHz
X102	1-760-275-11	s	VCO, CRYSTAL 27.00MHz
X601	1-579-995-12	s	RESONATOR, CERAMIC 17.734475MHz

DAC-20 BOARD(ESBK-7025/7071(UC/J))

Ref. No. or Q'ty	Part No.	SP	Description
This mounted circuit board is not supplied for repair part.			
C100	1-163-238-11	s	CERAMIC, CHIP 30pF 5% 50V
C101	1-163-038-91	s	CERAMIC, CHIP 0.1uF 25V
C102	1-163-038-91	s	CERAMIC, CHIP 0.1uF 25V
C103	1-163-038-91	s	CERAMIC, CHIP 0.1uF 25V
C104	1-163-243-11	s	CERAMIC, CHIP 47pF 5% 50V
C105	1-163-113-00	■	CERAMIC, CHIP 68pF 5% 50V
C106	1-163-243-11	s	CERAMIC, CHIP 47pF 5% 50V
C107	1-124-589-11	s	ELECT 47uF 20% 16V
C108-113	1-163-038-91	s	CERAMIC, CHIP 0.1uF 25V
C114	1-124-589-11	■	ELECT 47uF 20% 16V
C115	1-163-038-91	s	CERAMIC, CHIP 0.1uF 25V
C116	1-124-589-11	s	ELECT 47uF 20% 16V
C117	1-163-038-91	s	CERAMIC, CHIP 0.1uF 25V
C118	1-124-589-11	s	ELECT 47uF 20% 16V
C119	1-163-038-91	s	CERAMIC, CHIP 0.1uF 25V
C120	1-163-038-91	■	CERAMIC, CHIP 0.1uF 25V
C121	1-163-251-11	s	CERAMIC, CHIP 100pF 5% 50V
C122	1-163-038-91	s	CERAMIC, CHIP 0.1uF 25V
C123	1-163-038-91	s	CERAMIC, CHIP 0.1uF 25V
C124	1-163-038-91	s	CERAMIC, CHIP 0.1uF 25V
C125	1-163-038-91	s	CERAMIC, CHIP 0.1uF 25V
C126	1-163-243-11	s	CERAMIC, CHIP 47pF 5% 50V
C127	1-163-235-11	s	CERAMIC, CHIP 22pF 5% 50V
C128	1-163-038-91	s	CERAMIC, CHIP 0.1uF 25V
C129	1-124-261-00	s	ELECT 10uF 20% 50V
C130	1-163-038-91	s	CERAMIC, CHIP 0.1uF 25V
C131	1-163-038-91	s	CERAMIC, CHIP 0.1uF 25V
C132	1-163-038-91	s	CERAMIC, CHIP 0.1uF 25V
C133	1-163-038-91	s	CERAMIC, CHIP 0.1uF 25V
C134	1-124-589-11	s	ELECT 47uF 20% 16V
C135	1-124-589-11	s	ELECT 47uF 20% 16V
C136-141	1-163-038-91	s	CERAMIC, CHIP 0.1uF 25V
C142	1-163-235-11	■	CERAMIC, CHIP 22pF 5% 50V
C143	1-163-235-11	s	CERAMIC, CHIP 22pF 5% 50V
C144	1-163-038-91	s	CERAMIC, CHIP 0.1uF 25V
C145	1-124-261-00	■	ELECT 10uF 20% 50V
C146	1-163-038-91	s	CERAMIC, CHIP 0.1uF 25V
C147	1-163-038-91	s	CERAMIC, CHIP 0.1uF 25V
C148	1-163-038-91	s	CERAMIC, CHIP 0.1uF 25V
C149	1-163-038-91	s	CERAMIC, CHIP 0.1uF 25V
C150	1-124-589-11	s	ELECT 47uF 20% 16V
C151	1-124-589-11	s	ELECT 47uF 20% 16V
C152-156	1-163-038-91	s	CERAMIC, CHIP 0.1uF 25V
C157	1-163-235-11	s	CERAMIC, CHIP 22pF 5% 50V
C158	1-163-235-11	s	CERAMIC, CHIP 22pF ■ 50V
C159	1-163-038-91	s	CERAMIC, CHIP 0.1uF 25V
C160	1-124-261-00	s	ELECT 10uF 20% 50V
C161	1-163-038-91	s	CERAMIC, CHIP 0.1uF 25V
C162	1-163-038-91	s	CERAMIC, CHIP 0.1uF 25V
C163	1-163-038-91	s	CERAMIC, CHIP 0.1uF 25V
C164	1-163-038-91	s	CERAMIC, CHIP 0.1uF 25V
C165	1-124-589-11	■	ELECT 47uF 20% 16V
C166	1-124-589-11	■	ELECT 47uF 20% 16V
C167-177	1-163-038-91	s	CERAMIC, CHIP 0.1uF 25V
C178	1-124-589-11	s	ELECT 47uF 20% 16V
C179	1-163-038-91	s	CERAMIC, CHIP 0.1uF 25V
C180	1-163-251-11	s	CERAMIC, CHIP 100pF 5% 50V

(DAC-20 BOARD(ESBK-7025/7071(UC/J)))

Ref. No. or Q'ty	Part No.	SP	Description
C181	1-163-038-91	s	CERAMIC, CHIP 0.1uF 25V
C182	1-163-243-11	s	CERAMIC, CHIP 47pF ■ 50V
C183	1-163-113-00	s	CERAMIC, CHIP 68pF 5% 50V
C184	1-163-243-11	s	CERAMIC, CHIP 47pF 5% 50V
C185-189	1-163-038-91	s	CERAMIC, CHIP 0.1uF 25V
C190	1-163-125-00	s	CERAMIC, CHIP 220pF 5% 50V
C193	1-163-038-91	s	CERAMIC, CHIP 0.1uF 25V
C200	1-163-038-91	s	CERAMIC, CHIP 0.1uF 25V
C201	1-163-038-91	s	CERAMIC, CHIP 0.1uF 25V
C202	1-124-589-11	s	ELECT 47uF 20% 16V
C203	1-124-589-11	s	ELECT 47uF 20% 16V
C204-209	1-163-038-91	s	CERAMIC, CHIP 0.1uF 25V
C210	1-163-251-11	s	CERAMIC, CHIP 100pF 5% 50V
C211	1-126-160-11	s	ELECT 1uF 20% 50V
C212	1-163-038-91	s	CERAMIC, CHIP 0.1uF 25V
C213	1-163-038-91	s	CERAMIC, CHIP 0.1uF 25V
C214	1-124-257-00	s	ELECT 2.2uF 20% 50V
C215	1-124-589-11	s	ELECT 47uF 20% 16V
C216	1-124-589-11	s	ELECT 47uF 20% 16V
C217	1-163-125-00	s	CERAMIC, CHIP 220pF 5% 50V
C218	1-163-038-91	s	CERAMIC, CHIP 0.1uF 25V
C219	1-163-037-11	s	CERAMIC, CHIP 0.022uF 10% 25V
C220	1-163-038-91	s	CERAMIC, CHIP 0.1uF 25V
C221	1-163-038-91	s	CERAMIC, CHIP 0.1uF 25V
C222	1-163-038-91	■	CERAMIC, CHIP 0.1uF 25V
C223	1-124-589-11	s	ELECT 47uF 20% 16V
C224	1-163-038-91	s	CERAMIC, CHIP 0.1uF 25V
C225	1-163-038-91	s	CERAMIC, CHIP 0.1uF 25V
C226	1-124-589-11	s	ELECT 47uF 20% 16V
C227	1-163-038-91	s	CERAMIC, CHIP 0.1uF 25V
C228	1-163-038-91	s	CERAMIC, CHIP 0.1uF 25V
C229	1-124-589-11	s	ELECT 47uF 20% 16V
C230	1-163-038-91	s	CERAMIC, CHIP 0.1uF 25V
C231	1-124-589-11	s	ELECT 47uF 20% 16V
C232-236	1-163-038-91	s	CERAMIC, CHIP 0.1uF 25V
C237	1-126-160-11	s	ELECT 1uF 20% 50V
C238	1-163-038-91	s	CERAMIC, CHIP 0.1uF 25V
C239	1-163-038-91	s	CERAMIC, CHIP 0.1uF 25V
C240	1-163-133-00	s	CERAMIC, CHIP 470pF 5% 50V
C241	1-163-038-91	s	CERAMIC, CHIP 0.1uF 25V
C242	1-124-257-00	s	ELECT 2.2uF 20% 50V
C243	1-163-037-11	s	CERAMIC, CHIP 0.022uF 10% 25V
C244-249	1-163-038-91	s	CERAMIC, CHIP 0.1uF 25V
C250	1-124-589-11	s	ELECT 47uF 20% 16V
C251	1-163-038-91	s	CERAMIC, CHIP 0.1uF 25V
C252	1-163-038-91	s	CERAMIC, CHIP 0.1uF 25V
C253	1-163-038-91	s	CERAMIC, CHIP 0.1uF 25V
C254	1-163-038-91	s	CERAMIC, CHIP 0.1uF 25V
C255	1-124-261-00	s	ELECT 10uF 20% 50V
C256	1-126-160-11	■	ELECT 1uF 20% 50V
C257	1-163-038-91	s	CERAMIC, CHIP 0.1uF 25V
C258	1-163-038-91	s	CERAMIC, CHIP 0.1uF 25V
C259	1-163-133-00	s	CERAMIC, CHIP 470pF 5% 50V
C260	1-163-038-91	s	CERAMIC, CHIP 0.1uF 25V
C261	1-124-257-00	s	ELECT 2.2uF 20% 50V
C262	1-163-038-91	s	CERAMIC, CHIP 0.1uF 25V
C263	1-163-038-91	s	CERAMIC, CHIP 0.1uF 25V
C264	1-163-038-91	s	CERAMIC, CHIP 0.1uF 25V
C265	1-124-589-11	s	ELECT 47uF 20% 16V

(DAC-20 BOARD(ESBK-7025/7071(UC/J)))

Ref. No. or Q'ty	Part No.	SP	Description
C266	1-163-038-91	s	CERAMIC, CHIP 0.1uF 25V
C267	1-163-231-11	s	CERAMIC, CHIP 15pF 5% 50V
C268	1-163-125-00	s	CERAMIC, CHIP 220pF 5% 50V
C269	1-163-251-11	s	CERAMIC, CHIP 100pF 5% 50V
C270	1-124-584-00	s	ELECT 100uF 20% 10V
C271	1-163-038-91	■	CERAMIC, CHIP 0.1uF 25V
C272	1-124-589-11	■	ELECT 47uF 20% 16V
C273	1-163-038-91	■	CERAMIC, CHIP 0.1uF 25V
C274	1-163-089-00	s	CERAMIC, CHIP 6pF 50V
C275	1-163-038-91	s	CERAMIC, CHIP 0.1uF 25V
C276	1-163-243-11	s	CERAMIC, CHIP 47pF 5% 50V
C277	1-163-038-91	s	CERAMIC, CHIP 0.1uF 25V
C278	1-124-589-11	s	ELECT 47uF 20% 16V
C279	1-124-584-00	s	ELECT 100uF 20% 10V
C280	1-124-584-00	s	ELECT 100uF 20% 10V
C281	1-163-087-00	s	CERAMIC, CHIP 4pF 50V
CN524	1-778-455-11	o	CONNECTOR, DIN 64P, MALE
CN525	1-766-793-11	o	CONNECTOR, DIN 64P, MALE
D100	8-719-105-28	s	DIODE RD2.4M-B
D101	8-719-105-28	■	DIODE RD2.4M-B
D102	8-719-105-28	s	DIODE RD2.4M-B
D200	8-719-105-28	s	DIODE RD2.4M-B
D201	8-719-105-28	s	DIODE RD2.4M-B
D202	8-719-105-28	s	DIODE RD2.4M-B
FL100	1-233-614-11	■	FILTER, LOW-PASS
FL101	1-233-599-11	s	FILTER, LOW-PASS
FL102	1-233-599-11	s	FILTER, LOW-PASS
IC100	8-759-099-38	s	IC SN74HCT374ANS-E05
IC101	8-759-515-09	s	IC SN74ALS374ANS
IC102	8-759-515-09	s	IC SN74ALS374ANS
IC103	8-759-515-09	s	IC SN74ALS374ANS
IC104	8-759-925-90	■	IC SN74HC74ANS
IC105	8-759-099-38	s	IC SN74HCT374ANS-E05
IC106	8-759-099-38	■	IC SN74HCT374ANS-E05
IC107	8-759-099-38	■	IC SN74HCT374ANS-E05
IC108	8-759-099-38	s	IC SN74HCT374ANS-E05
IC109	8-759-099-38	s	IC SN74HCT374ANS-E05
IC110	8-759-099-38	■	IC SN74HCT374ANS-E05
IC111	8-759-099-38	■	IC SN74HCT374ANS-E05
IC112	8-752-032-93	s	IC CXA1260Q-Z
IC113	8-759-929-26	s	IC TL431CPS
IC114	8-752-052-82	s	IC CXA1432M
IC115	8-759-271-04	s	IC LT1252CS8
IC116	8-752-052-82	s	IC CXA1432M
IC117	8-759-271-04	s	IC LT1252CS8
IC118	8-752-052-82	■	IC CXA1432M
IC119	8-759-271-04	s	IC LT1252CS8
IC120	8-759-925-74	s	IC TC74HC04ANS
IC121	8-759-099-38	s	IC SN74HCT374ANS-E05
IC122	8-759-045-17	s	IC NJM79L05UA
IC124	8-759-045-17	s	IC NJM79L05UA
IC126	8-759-045-17	s	IC NJM79L05UA
IC127	8-759-245-45	■	IC TA78L09F
IC128	8-759-926-44	s	IC SN74HC240ANS
IC143	8-759-925-90	s	IC SN74HC74ANS
IC200	8-752-015-81	s	IC CX20158
IC201	8-759-157-17	s	IC PQ05SZ1U

(DAC-20 BOARD(ESBK-7025/7071(UC/J)))

Ref. No. or Q'ty	Part No.	SP	Description
IC202	8-759-045-17	s	IC NJM79L05UA
IC203	8-752-015-81	s	IC CX20158
IC205	8-759-045-17	s	IC NJM79L05UA
IC206	8-752-015-81	s	IC CX20158
IC208	8-759-045-17	s	IC NJM79L05UA
L100	1-408-413-00	s	INDUCTOR 22uH
L101	1-408-413-00	s	INDUCTOR 22uH
L102	1-410-478-11	■	INDUCTOR 47uH
L103	1-410-478-11	s	INDUCTOR 47uH
L104	1-410-478-11	s	INDUCTOR 47uH
L105	1-410-478-11	s	INDUCTOR 47uH
L200	1-410-478-11	s	INDUCTOR 47uH
L201	1-410-478-11	s	INDUCTOR 47uH
L202	1-410-478-11	s	INDUCTOR 47uH
L206	1-410-482-31	s	INDUCTOR 100uH
Q100	8-729-120-28	s	TRANSISTOR 2SC1623-L5L6
Q101	8-729-120-28	■	TRANSISTOR 2SC1623-L5L6
Q102	8-729-216-22	s	TRANSISTOR 2SA1162
Q103	8-729-120-28	s	TRANSISTOR 2SC1623-L5L6
Q104	8-729-120-28	s	TRANSISTOR 2SC1623-L5L6
Q105	8-729-120-28	s	TRANSISTOR 2SC1623-L5L6
Q106	8-729-216-22	s	TRANSISTOR 2SA1162
Q107	8-729-120-28	■	TRANSISTOR 2SC1623-L5L6
Q108	8-729-216-22	s	TRANSISTOR 2SA1162
Q109	8-729-120-28	s	TRANSISTOR 2SC1623-L5L6
Q110	8-729-120-28	s	TRANSISTOR 2SC1623-L5L6
Q111	8-729-216-22	s	TRANSISTOR 2SA1162
Q112	8-729-120-28	s	TRANSISTOR 2SC1623-L5L6
Q113	8-729-216-22	s	TRANSISTOR 2SA1162
Q116	8-729-120-28	s	TRANSISTOR 2SC1623-L5L6
Q117	8-729-120-28	s	TRANSISTOR 2SC1623-L5L6
Q200	8-729-120-28	s	TRANSISTOR 2SC1623-L5L6
Q201	8-729-216-22	s	TRANSISTOR 2SA1162
Q202	8-729-120-28	s	TRANSISTOR 2SC1623-L5L6
Q203	8-729-907-26	s	TRANSISTOR IMX1
Q204	8-729-120-28	s	TRANSISTOR 2SC1623-L5L6
Q205	8-729-120-28	s	TRANSISTOR 2SC1623-L5L6
Q206	8-729-216-22	■	TRANSISTOR 2SA1162
Q207	8-729-216-22	■	TRANSISTOR 2SA1162
Q208	8-729-216-22	s	TRANSISTOR 2SA1162
Q209	8-729-216-22	s	TRANSISTOR 2SA1162
Q210	8-729-120-28	s	TRANSISTOR 2SC1623-L5L6
Q211	8-729-216-22	s	TRANSISTOR 2SA1162
Q212	8-729-120-28	s	TRANSISTOR 2SC1623-L5L6
Q213	8-729-216-22	s	TRANSISTOR 2SA1162
Q214	8-729-120-28	s	TRANSISTOR 2SC1623-L5L6
Q215	8-729-216-22	s	TRANSISTOR 2SA1162
Q216	8-729-120-28	■	TRANSISTOR 2SC1623-L5L6
Q217	8-729-907-26	s	TRANSISTOR IMX1
Q218	8-729-120-28	s	TRANSISTOR 2SC1623-L5L6
Q219	8-729-120-28	s	TRANSISTOR 2SC1623-L5L6
Q220	8-729-216-22	s	TRANSISTOR 2SA1162
Q221	8-729-216-22	s	TRANSISTOR 2SA1162
Q222	8-729-120-28	s	TRANSISTOR 2SC1623-L5L6
Q223	8-729-216-22	s	TRANSISTOR 2SA1162
Q224	8-729-907-26	s	TRANSISTOR IMX1
Q225	8-729-120-28	s	TRANSISTOR 2SC1623-L5L6
Q226	8-729-120-28	s	TRANSISTOR 2SC1623-L5L6
Q227	8-729-216-22	s	TRANSISTOR 2SA1162

(DAC-20 BOARD(ESBK-7025/7071(UC/J)))

Ref. No. or Q'ty	Part No.	SP	Description
Q228	8-729-216-22	s	TRANSISTOR 2SA1162
Q229	8-729-120-28	s	TRANSISTOR 2SC1623-L5L6
Q230	8-729-216-22	s	TRANSISTOR 2SA1162
Q231	8-729-120-28	s	TRANSISTOR 2SC1623-L5L6
Q232	8-729-120-28	s	TRANSISTOR 2SC1623-L5L6
Q233	8-729-120-28	■	TRANSISTOR 2SC1623-L5L6
Q234	8-729-120-28	s	TRANSISTOR 2SC1623-L5L6
R104	1-208-775-11	s	METAL, CHIP 510 0.5% 1/10W
R105	1-216-045-00	s	METAL, CHIP 680 [illegible] 1/10W
R106	1-216-041-00	■	METAL, CHIP 470 5% 1/10W
R108	1-216-049-91	s	METAL, CHIP 1k [illegible] 1/10W
R109	1-216-017-91	s	METAL, CHIP 47 5% 1/10W
R110	1-216-639-11	s	METAL, CHIP 330 0.5% 1/10W
R112	1-216-639-11	s	METAL, CHIP 330 0.5% 1/10W
R113	1-216-295-91	s	RES, CHIP 0
R114	1-216-065-00	s	METAL, CHIP 4.7k 5% 1/10W
R115	1-216-017-91	■	METAL, CHIP 47 5% 1/10W
R116	1-216-641-11	■	METAL, CHIP 390 0.5% 1/10W
R117	1-216-647-11	■	METAL, CHIP 680 0.5% 1/10W
R118	1-216-651-11	s	METAL, CHIP 1k 0.5% 1/10W
R119	1-216-033-00	s	METAL, CHIP 220 5% 1/10W
R120	1-216-041-00	s	METAL, CHIP 470 5% 1/10W
R121	1-216-043-91	■	METAL, CHIP 560 5% 1/10W
R122	1-216-073-00	s	METAL, CHIP 10k 5% 1/10W
R123	1-216-049-91	s	METAL, CHIP 1k 5% 1/10W
R124	1-216-017-91	s	METAL, CHIP 47 5% 1/10W
R125	1-216-639-11	■	METAL, CHIP 330 0.5% 1/10W
R127	1-216-639-11	s	METAL, CHIP 330 0.5% 1/10W
R128	1-216-295-91	s	RES, CHIP 0
R129	1-216-065-00	s	METAL, CHIP 4.7k 5% 1/10W
R130	1-216-017-91	s	METAL, CHIP 47 [illegible] 1/10W
R131	1-216-635-11	s	METAL, CHIP 220 0.5% 1/10W
R132	1-216-647-11	s	METAL, CHIP 680 0.5% 1/10W
R133	1-216-651-11	s	METAL, CHIP 1k 0.5% 1/10W
R134	1-216-025-91	■	METAL, CHIP 100 5% 1/10W
R135	1-216-041-00	s	METAL, CHIP 470 5% 1/10W
R136	1-208-775-11	■	METAL, CHIP 510 0.5% 1/10W
R137	1-216-073-00	s	METAL, CHIP 10k [illegible] 1/10W
R138	1-216-049-91	■	METAL, CHIP 1k 5% 1/10W
R139	1-216-049-91	■	METAL, CHIP 1k 5% 1/10W
R140	1-216-017-91	s	METAL, CHIP 47 [illegible] 1/10W
R141	1-216-017-91	■	METAL, CHIP 47 [illegible] 1/10W
R142	1-216-639-11	s	METAL, CHIP 330 0.5% 1/10W
R143	1-216-057-00	s	METAL, CHIP 2.2k [illegible] 1/10W
R144	1-216-639-11	■	METAL, CHIP 330 0.5% 1/10W
R145	1-216-295-91	s	RES, CHIP 0
R146	1-216-065-00	s	METAL, CHIP 4.7k 5% 1/10W
R147	1-216-017-91	s	METAL, CHIP 47 5% 1/10W
R148	1-216-635-11	s	METAL, CHIP 220 0.5% 1/10W
R149	1-216-647-11	s	METAL, CHIP 680 0.5% 1/10W
R150	1-216-651-11	s	METAL, CHIP 1k 0.5% 1/10W
R151	1-216-025-91	s	METAL, CHIP 100 5% 1/10W
R152	1-216-041-00	s	METAL, CHIP 470 5% 1/10W
R153	1-208-775-11	■	METAL, CHIP 510 0.5% 1/10W
R154	1-216-073-00	s	METAL, CHIP 10k 5% 1/10W
R155	1-216-049-91	s	METAL, CHIP 1k [illegible] 1/10W
R157	1-216-017-91	s	METAL, CHIP 47 5% 1/10W
R158	1-216-049-91	■	METAL, CHIP 1k [illegible] 1/10W

(DAC-20 BOARD(ESBK-7025/7071(UC/J)))

Ref. No. or Q'ty	Part No.	SP	Description
R159	1-216-049-91	s	METAL, CHIP 1k 5% 1/10W
R160	1-216-057-00	s	METAL, CHIP 2.2k 5% 1/10W
R161	1-216-049-91	s	METAL, CHIP 1k 5% 1/10W
R162	1-216-057-00	s	METAL, CHIP 2.2k 5% 1/10W
R163	1-216-049-91	s	METAL, CHIP 1k 5% 1/10W
R164	1-208-775-11	s	METAL, CHIP 510 0.5% 1/10W
R166	1-216-045-00	s	METAL, CHIP 680 5% 1/10W
R167	1-216-049-91	s	METAL, CHIP 1k 5% 1/10W
R168	1-208-775-11	s	METAL, CHIP 510 0.5% 1/10W
R170	1-216-045-00	s	METAL, CHIP 680 5% 1/10W
R171	1-216-017-91	s	METAL, CHIP 47 5% 1/10W
R176	1-216-097-91	s	METAL, CHIP 100k 5% 1/10W
R177	1-216-097-91	s	METAL, CHIP 100k 5% 1/10W
R178	1-216-097-91	s	METAL, CHIP 100k 5% 1/10W
R179	1-216-097-91	s	METAL, CHIP 100k 5% 1/10W
R181	1-216-097-91	s	METAL, CHIP 100k 5% 1/10W
R182	1-216-017-91	s	METAL, CHIP 47 5% 1/10W
R183	1-216-295-91	s	RES, CHIP 0
R185	1-216-025-91	s	METAL, CHIP 100 5% 1/10W
R186	1-216-295-91	s	RES, CHIP 0
R191	1-216-073-00	s	METAL, CHIP 10k 5% 1/10W
R192	1-216-073-00	s	METAL, CHIP 10k 5% 1/10W
R193	1-216-295-91	s	RES, CHIP 0
R200	1-216-017-91	s	METAL, CHIP 47 5% 1/10W
R201	1-216-057-00	s	METAL, CHIP 2.2k 5% 1/10W
R202	1-216-017-91	s	METAL, CHIP 47 5% 1/10W
R203	1-216-045-00	s	METAL, CHIP 680 5% 1/10W
R204	1-216-057-00	s	METAL, CHIP 2.2k 5% 1/10W
R205	1-216-049-91	s	METAL, CHIP 1k 5% 1/10W
R206	1-219-369-11	s	METAL, CHIP 1.4k 0.1% 1/10W
R207	1-219-370-11	s	METAL, CHIP 2.91k 0.1% 1/10W
R208	1-216-081-00	s	METAL, CHIP 22k 5% 1/10W
R209	1-216-049-91	s	METAL, CHIP 1k 5% 1/10W
R210	1-216-017-91	s	METAL, CHIP 47 5% 1/10W
R211	1-216-041-00	s	METAL, CHIP 470 5% 1/10W
R212	1-216-033-00	s	METAL, CHIP 220 5% 1/10W
R213	1-216-051-00	s	METAL, CHIP 1.2k 5% 1/10W
R214	1-216-041-00	s	METAL, CHIP 470 5% 1/10W
R215	1-216-057-00	s	METAL, CHIP 2.2k 5% 1/10W
R216	1-216-053-00	s	METAL, CHIP 1.5k 5% 1/10W
R217	1-216-049-91	s	METAL, CHIP 1k 5% 1/10W
R218	1-216-049-91	s	METAL, CHIP 1k 5% 1/10W
R219	1-216-009-00	s	METAL, CHIP 22 5% 1/10W
R220	1-216-051-00	s	METAL, CHIP 1.2k 5% 1/10W
R221	1-216-049-91	s	METAL, CHIP 1k 5% 1/10W
R222	1-216-025-91	s	METAL, CHIP 100 5% 1/10W
R223	1-216-033-00	s	METAL, CHIP 220 5% 1/10W
R227	1-216-049-91	s	METAL, CHIP 1k 5% 1/10W
R228	1-216-049-91	s	METAL, CHIP 1k 5% 1/10W
R229	1-216-017-91	s	METAL, CHIP 47 5% 1/10W
R230	1-216-049-91	s	METAL, CHIP 1k 5% 1/10W
R231	1-216-049-91	s	METAL, CHIP 1k 5% 1/10W
R232	1-216-033-00	s	METAL, CHIP 220 5% 1/10W
R233	1-216-049-91	s	METAL, CHIP 1k 5% 1/10W
R234	1-216-017-91	s	METAL, CHIP 47 5% 1/10W
R235	1-216-033-00	s	METAL, CHIP 220 5% 1/10W
R236	1-216-073-00	s	METAL, CHIP 10k 5% 1/10W
R237	1-216-025-91	s	METAL, CHIP 100 5% 1/10W
R238	1-216-057-00	s	METAL, CHIP 2.2k 5% 1/10W

(DAC-20 BOARD(ESBK-7025/7071(UC/J)))

Ref. No. or Q'ty	Part No.	SP	Description
R239	1-216-049-91	s	METAL, CHIP 1k 5% 1/10W
R240	1-216-065-00	s	METAL, CHIP 4.7k 5% 1/10W
R241	1-216-079-00	s	METAL, CHIP 18k 5% 1/10W
R242	1-216-017-91	s	METAL, CHIP 47 5% 1/10W
R243	1-216-057-00	s	METAL, CHIP 2.2k 5% 1/10W
R244	1-216-017-91	s	METAL, CHIP 47 5% 1/10W
R245	1-216-045-00	s	METAL, CHIP 680 5% 1/10W
R246	1-216-057-00	s	METAL, CHIP 2.2k 5% 1/10W
R247	1-216-049-91	s	METAL, CHIP 1k 5% 1/10W
R248	1-218-177-11	s	METAL, CHIP 1001 0.1% 1/16W
R249	1-219-368-11	s	METAL, CHIP 713.4 0.1% 1/10W
R250	1-216-017-91	s	METAL, CHIP 47 5% 1/10W
R251	1-216-041-00	s	METAL, CHIP 470 5% 1/10W
R252	1-216-041-00	s	METAL, CHIP 470 5% 1/10W
R253	1-216-057-00	s	METAL, CHIP 2.2k 5% 1/10W
R254	1-216-041-00	s	METAL, CHIP 470 5% 1/10W
R255	1-216-057-00	s	METAL, CHIP 2.2k 5% 1/10W
R256	1-216-053-00	s	METAL, CHIP 1.5k 5% 1/10W
R257	1-216-049-91	s	METAL, CHIP 1k 5% 1/10W
R258	1-216-049-91	s	METAL, CHIP 1k 5% 1/10W
R259	1-216-061-00	s	METAL, CHIP 3.3k 5% 1/10W
R260	1-216-009-00	s	METAL, CHIP 22 5% 1/10W
R261	1-216-051-00	s	METAL, CHIP 1.2k 5% 1/10W
R262	1-216-049-91	s	METAL, CHIP 1k 5% 1/10W
R263	1-216-017-91	s	METAL, CHIP 47 5% 1/10W
R264	1-216-049-91	s	METAL, CHIP 1k 5% 1/10W
R265	1-216-033-00	s	METAL, CHIP 220 5% 1/10W
R266	1-216-049-91	s	METAL, CHIP 1k 5% 1/10W
R267	1-216-025-91	s	METAL, CHIP 100 5% 1/10W
R268	1-216-067-00	s	METAL, CHIP 5.6k 5% 1/10W
R269	1-216-057-00	s	METAL, CHIP 2.2k 5% 1/10W
R270	1-216-033-00	s	METAL, CHIP 220 5% 1/10W
R271	1-216-049-91	s	METAL, CHIP 1k 5% 1/10W
R272	1-216-065-00	s	METAL, CHIP 4.7k 5% 1/10W
R273	1-216-049-91	s	METAL, CHIP 1k 5% 1/10W
R274	1-216-017-91	s	METAL, CHIP 47 5% 1/10W
R275	1-216-057-00	s	METAL, CHIP 2.2k 5% 1/10W
R276	1-216-017-91	s	METAL, CHIP 47 5% 1/10W
R277	1-216-045-00	s	METAL, CHIP 680 5% 1/10W
R278	1-218-177-11	s	METAL, CHIP 1001 0.1% 1/16W
R279	1-219-367-11	s	METAL, CHIP 564.3 0.1% 1/10W
R280	1-216-017-91	s	METAL, CHIP 47 5% 1/10W
R281	1-216-039-00	s	METAL, CHIP 390 5% 1/10W
R282	1-216-041-00	s	METAL, CHIP 470 5% 1/10W
R283	1-216-057-00	s	METAL, CHIP 2.2k 5% 1/10W
R284	1-216-039-00	s	METAL, CHIP 390 5% 1/10W
R285	1-216-057-00	s	METAL, CHIP 2.2k 5% 1/10W
R286	1-216-053-00	s	METAL, CHIP 1.5k 5% 1/10W
R287	1-216-049-91	s	METAL, CHIP 1k 5% 1/10W
R288	1-216-049-91	s	METAL, CHIP 1k 5% 1/10W
R289	1-216-049-91	s	METAL, CHIP 1k 5% 1/10W
R290	1-216-061-00	s	METAL, CHIP 3.3k 5% 1/10W
R291	1-216-009-00	s	METAL, CHIP 22 5% 1/10W
R292	1-216-051-00	s	METAL, CHIP 1.2k 5% 1/10W
R293	1-216-049-91	s	METAL, CHIP 1k 5% 1/10W
R294	1-216-029-00	s	METAL, CHIP 150 5% 1/10W
R296	1-216-033-00	s	METAL, CHIP 220 5% 1/10W
R298	1-216-025-91	s	METAL, CHIP 100 5% 1/10W
R299	1-216-033-00	s	METAL, CHIP 220 5% 1/10W

(DAC-20 BOARD(ESBK-7025/7071(UC/J)))

Ref. No. or Q'ty	Part No.	SP	Description
R304	1-208-789-11	■	METAL, CHIP 2k 0.5% 1/10W
R306	1-216-049-91	s	METAL, CHIP 1k 5% 1/10W
R307	1-216-057-00	s	METAL, CHIP 2.2k ■ 1/10W
R308	1-216-033-00	s	METAL, CHIP 220 5% 1/10W
R309	1-216-057-00	s	METAL, CHIP 2.2k 5% 1/10W
R310	1-216-049-91	s	METAL, CHIP 1k 5% 1/10W
R312	1-216-057-00	s	METAL, CHIP 2.2k ■ 1/10W
R313	1-216-057-00	■	METAL, CHIP 2.2k ■ 1/10W
R314	1-216-049-91	s	METAL, CHIP 1k 5% 1/10W
R315	1-216-049-91	s	METAL, CHIP 1k 5% 1/10W
R318	1-216-033-00	s	METAL, CHIP 220 5% 1/10W
R322	1-216-073-00	s	METAL, CHIP 10k 5% 1/10W
R326	1-216-049-91	s	METAL, CHIP 1k 5% 1/10W
R327	1-216-295-91	■	RES, CHIP 0
R328	1-216-037-00	s	METAL, CHIP 330 5% 1/10W
R329	1-216-025-91	s	METAL, CHIP 100 ■ 1/10W
R330	1-216-025-91	s	METAL, CHIP 100 5% 1/10W
R333	1-216-033-00	s	METAL, CHIP 220 5% 1/10W
R334	1-216-057-00	s	METAL, CHIP 2.2k 5% 1/10W
R335	1-216-065-00	s	METAL, CHIP 4.7k 5% 1/10W
R336	1-216-033-00	s	METAL, CHIP 220 5% 1/10W
R337	1-216-097-91	s	METAL, CHIP 100k 5% 1/10W
R338	1-216-097-91	s	METAL, CHIP 100k 5% 1/10W
RB100	1-239-426-11	s	RESISTOR BLOCK, CHIP 2.2kx4
RB101	1-239-426-11	s	RESISTOR BLOCK, CHIP 2.2kx4
RB102	1-239-426-11	s	RESISTOR BLOCK, CHIP 2.2kx4
RB103	1-239-426-11	■	RESISTOR BLOCK, CHIP 2.2kx4
RV100	1-241-761-11	s	RES, ADJ, METAL 1k
RV101	1-241-759-21	s	RES, ADJ, METAL 220
RV102	1-241-761-11	s	RES, ADJ, METAL 1k
RV103	1-241-759-21	s	RES, ADJ, METAL 220
RV201	1-241-759-21	s	RES, ADJ, METAL 220
RV202	1-241-759-21	s	RES, ADJ, METAL 220
RV203	1-241-759-21	s	RES, ADJ, METAL 220
RV204	1-241-761-11	s	RES, ADJ, METAL 1k
RV205	1-241-759-21	■	RES, ADJ, METAL 220
RV206	1-241-761-11	s	RES, ADJ, METAL 1k
RV208	1-241-760-11	s	RES, ADJ, METAL 470

DAC-20A BOARD(ESBK-7025/7071(CE))

Ref. No. or Q'ty	Part No.	SP	Description

This mounted circuit board is not supplied for repair part.

C100	1-163-238-11	s	CERAMIC, CHIP 30pF 5% 50V
C101	1-163-038-91	■	CERAMIC, CHIP 0.1uF 25V
C102	1-163-038-91	s	CERAMIC, CHIP 0.1uF 25V
C103	1-163-038-91	s	CERAMIC, CHIP 0.1uF 25V
C104	1-163-243-11	s	CERAMIC, CHIP 47pF 5% 50V
C105	1-163-113-00	s	CERAMIC, CHIP 68pF 5% 50V
C106	1-163-243-11	s	CERAMIC, CHIP 47pF ■ 50V
C107	1-124-589-11	s	ELECT 47uF 20% 16V
C108-113	1-163-038-91	s	CERAMIC, CHIP 0.1uF 25V
C114	1-124-589-11	■	ELECT 47uF 20% 16V
C115	1-163-038-91	s	CERAMIC, CHIP 0.1uF 25V
C116	1-124-589-11	s	ELECT 47uF 20% 16V
C117	1-163-038-91	s	CERAMIC, CHIP 0.1uF 25V
C118	1-124-589-11	s	ELECT 47uF 20% 16V
C119	1-163-038-91	s	CERAMIC, CHIP 0.1uF 25V
C120	1-163-038-91	■	CERAMIC, CHIP 0.1uF 25V
C121	1-163-251-11	■	CERAMIC, CHIP 100pF 5% 50V
C122	1-163-038-91	■	CERAMIC, CHIP 0.1uF 25V
C123	1-163-038-91	s	CERAMIC, CHIP 0.1uF 25V
C124	1-163-038-91	s	CERAMIC, CHIP 0.1uF 25V
C125	1-163-038-91	s	CERAMIC, CHIP 0.1uF 25V
C126	1-163-243-11	■	CERAMIC, CHIP 47pF 5% 50V
C127	1-163-235-11	s	CERAMIC, CHIP 22pF 5% 50V
C128	1-163-038-91	s	CERAMIC, CHIP 0.1uF 25V
C129	1-124-261-00	■	ELECT 10uF 20% 50V
C130	1-163-038-91	s	CERAMIC, CHIP 0.1uF 25V
C131	1-163-038-91	s	CERAMIC, CHIP 0.1uF 25V
C132	1-163-038-91	s	CERAMIC, CHIP 0.1uF 25V
C133	1-163-038-91	s	CERAMIC, CHIP 0.1uF 25V
C134	1-124-589-11	s	ELECT 47uF 20% 16V
C135	1-124-589-11	s	ELECT 47uF 20% 16V
C136-141	1-163-038-91	■	CERAMIC, CHIP 0.1uF 25V
C142	1-163-235-11	s	CERAMIC, CHIP 22pF ■ 50V
C143	1-163-235-11	s	CERAMIC, CHIP 22pF 5% 50V
C144	1-163-038-91	s	CERAMIC, CHIP 0.1uF 25V
C145	1-124-261-00	s	ELECT 10uF 20% 50V
C146	1-163-038-91	s	CERAMIC, CHIP 0.1uF 25V
C147	1-163-038-91	s	CERAMIC, CHIP 0.1uF 25V
C148	1-163-038-91	s	CERAMIC, CHIP 0.1uF 25V
C149	1-163-038-91	■	CERAMIC, CHIP 0.1uF 25V
C150	1-124-589-11	s	ELECT 47uF 20% 16V
C151	1-124-589-11	s	ELECT 47uF 20% 16V
C152-155	1-163-038-91	s	CERAMIC, CHIP 0.1uF 25V
C157	1-163-235-11	■	CERAMIC, CHIP 22pF 5% 50V
C158	1-163-235-11	s	CERAMIC, CHIP 22pF 5% 50V
C159	1-163-038-91	s	CERAMIC, CHIP 0.1uF 25V
C160	1-124-261-00	s	ELECT 10uF 20% 50V
C161	1-163-038-91	s	CERAMIC, CHIP 0.1uF 25V
C162	1-163-038-91	s	CERAMIC, CHIP 0.1uF 25V
C163	1-163-038-91	■	CERAMIC, CHIP 0.1uF 25V
C164	1-163-038-91	s	CERAMIC, CHIP 0.1uF 25V
C165	1-124-589-11	■	ELECT 47uF 20% 16V
C166	1-124-589-11	s	ELECT 47uF 20% 16V
C167-177	1-163-038-91	s	CERAMIC, CHIP 0.1uF 25V
C178	1-124-589-11	■	ELECT 47uF 20% 16V
C179	1-163-038-91	s	CERAMIC, CHIP 0.1uF 25V
C180	1-163-251-11	■	CERAMIC, CHIP 100pF 5% 50V

(DAC-20A BOARD(ESBK-7025/7071(CE)))

Ref. No. or Q'ty	Part No.	SP	Description
C181	1-163-038-91	s	CERAMIC, CHIP 0.1uF 25V
C182	1-163-243-11	s	CERAMIC, CHIP 47pF 5% 50V
C183	1-163-113-00	s	CERAMIC, CHIP 68pF 5% 50V
C184	1-163-243-11	s	CERAMIC, CHIP 47pF 5% 50V
C185-189	1-163-038-91	s	CERAMIC, CHIP 0.1uF 25V
C190	1-163-125-00	s	CERAMIC, CHIP 220pF 5% 50V
C193	1-163-038-91	■	CERAMIC, CHIP 0.1uF 25V
C200	1-163-038-91	■	CERAMIC, CHIP 0.1uF 25V
C201	1-163-038-91	s	CERAMIC, CHIP 0.1uF 25V
C202	1-124-589-11	s	ELECT 47uF 20% 16V
C203	1-124-589-11	s	ELECT 47uF 20% 16V
C204-209	1-163-038-91	s	CERAMIC, CHIP 0.1uF 25V
C210	1-163-251-11	s	CERAMIC, CHIP 100pF 5% 50V
C211	1-126-160-11	s	ELECT 1uF 20% 50V
C212	1-163-038-91	s	CERAMIC, CHIP 0.1uF 25V
C213	1-163-038-91	s	CERAMIC, CHIP 0.1uF 25V
C214	1-124-257-00	s	ELECT 2.2uF 20% 50V
C215	1-124-589-11	s	ELECT 47uF 20% 16V
C216	1-124-589-11	■	ELECT 47uF 20% 16V
C217	1-163-125-00	s	CERAMIC, CHIP 220pF 5% 50V
C218	1-163-038-91	s	CERAMIC, CHIP 0.1uF 25V
C219	1-163-037-11	■	CERAMIC, CHIP 0.022uF 10% 25V
C220	1-163-038-91	s	CERAMIC, CHIP 0.1uF 25V
C221	1-163-038-91	s	CERAMIC, CHIP 0.1uF 25V
C222	1-163-038-91	s	CERAMIC, CHIP 0.1uF 25V
C223	1-124-589-11	s	ELECT 47uF 20% 16V
C224	1-163-038-91	s	CERAMIC, CHIP 0.1uF 25V
C225	1-163-038-91	s	CERAMIC, CHIP 0.1uF 25V
C226	1-124-589-11	s	ELECT 47uF 20% 16V
C227	1-163-038-91	■	CERAMIC, CHIP 0.1uF 25V
C228	1-163-038-91	s	CERAMIC, CHIP 0.1uF 25V
C229	1-124-589-11	s	ELECT 47uF 20% 16V
C230	1-163-038-91	s	CERAMIC, CHIP 0.1uF 25V
C231	1-124-589-11	s	ELECT 47uF 20% 16V
C232-236	1-163-038-91	s	CERAMIC, CHIP 0.1uF 25V
C237	1-126-160-11	s	ELECT 1uF 20% 50V
C238	1-163-038-91	s	CERAMIC, CHIP 0.1uF 25V
C239	1-163-038-91	■	CERAMIC, CHIP 0.1uF 25V
C240	1-163-133-00	s	CERAMIC, CHIP 470pF 5% 50V
C241	1-163-038-91	s	CERAMIC, CHIP 0.1uF 25V
C242	1-124-257-00	s	ELECT 2.2uF 20% 50V
C243	1-163-037-11	s	CERAMIC, CHIP 0.022uF 10% 25V
C244-249	1-163-038-91	s	CERAMIC, CHIP 0.1uF 25V
C250	1-124-589-11	s	ELECT 47uF 20% 16V
C251	1-163-038-91	s	CERAMIC, CHIP 0.1uF 25V
C252	1-163-038-91	s	CERAMIC, CHIP 0.1uF 25V
C253	1-163-038-91	s	CERAMIC, CHIP 0.1uF 25V
C254	1-163-038-91	s	CERAMIC, CHIP 0.1uF 25V
C255	1-124-261-00	s	ELECT 10uF 20% 50V
C256	1-126-160-11	s	ELECT 1uF 20% 50V
C257	1-163-038-91	s	CERAMIC, CHIP 0.1uF 25V
C258	1-163-038-91	s	CERAMIC, CHIP 0.1uF 25V
C259	1-163-133-00	s	CERAMIC, CHIP 470pF 5% 50V
C260	1-163-038-91	s	CERAMIC, CHIP 0.1uF 25V
C261	1-124-257-00	s	ELECT 2.2uF 20% 50V
C262	1-163-038-91	s	CERAMIC, CHIP 0.1uF 25V
C263	1-163-038-91	s	CERAMIC, CHIP 0.1uF 25V
C264	1-163-038-91	s	CERAMIC, CHIP 0.1uF 25V
C265	1-124-589-11	s	ELECT 47uF 20% 16V

(DAC-20A BOARD(ESBK-7025/7071(CE)))

Ref. No. or Q'ty	Part No.	SP	Description
C266	1-163-038-91	s	CERAMIC, CHIP 0.1uF 25V
C267	1-163-231-11	s	CERAMIC, CHIP 15pF ■ 50V
C268	1-163-125-00	s	CERAMIC, CHIP 220pF 5% 50V
C269	1-163-251-11	s	CERAMIC, CHIP 100pF 5% 50V
C270	1-124-584-00	s	ELECT 100uF 20% 10V
C271	1-163-038-91	s	CERAMIC, CHIP 0.1uF 25V
C272	1-124-589-11	s	ELECT 47uF 20% 16V
C273	1-163-038-91	■	CERAMIC, CHIP 0.1uF 25V
C274	1-163-089-00	s	CERAMIC, CHIP 6pF 50V
C275	1-163-038-91	s	CERAMIC, CHIP 0.1uF 25V
C276	1-163-251-11	s	CERAMIC, CHIP 100pF 5% 50V
C277	1-163-038-91	s	CERAMIC, CHIP 0.1uF 25V
C278	1-124-589-11	s	ELECT 47uF 20% 16V
C279	1-124-584-00	s	ELECT 100uF 20% 10V
C280	1-124-584-00	s	ELECT 100uF 20% 10V
C281	1-163-220-11	s	CERAMIC, CHIP 3pF 50V
CN524	1-778-455-11	o	CONNECTOR, DIN 64P, MALE
CN525	1-766-793-11	o	CONNECTOR, DIN 64P, MALE
D100	8-719-105-28	■	DIODE RD2.4M-B
D101	8-719-105-28	s	DIODE RD2.4M-B
D102	8-719-105-28	s	DIODE RD2.4M-B
D200	8-719-105-28	■	DIODE RD2.4M-B
D201	8-719-105-28	s	DIODE RD2.4M-B
D202	8-719-105-28	s	DIODE RD2.4M-B
FL100	1-233-614-11	s	FILTER, LOW-PASS
FL101	1-233-599-11	s	FILTER, LOW-PASS
FL102	1-233-599-11	s	FILTER, LOW-PASS
IC100	8-759-099-38	■	IC SN74HCT374ANS-E05
IC101	8-759-515-09	s	IC SN74ALS374ANS
IC102	8-759-515-09	s	IC SN74ALS374ANS
IC103	8-759-515-09	s	IC SN74ALS374ANS
IC104	8-759-925-90	■	IC SN74HC74ANS
IC105	8-759-099-38	s	IC SN74HCT374ANS-E05
IC106	8-759-099-38	s	IC SN74HCT374ANS-E05
IC107	8-759-099-38	■	IC SN74HCT374ANS-E05
IC108	8-759-099-38	s	IC SN74HCT374ANS-E05
IC109	8-759-099-38	■	IC SN74HCT374ANS-E05
IC110	8-759-099-38	s	IC SN74HCT374ANS-E05
IC111	8-759-099-38	■	IC SN74HCT374ANS-E05
IC112	8-752-032-93	■	IC CXA1260Q-Z
IC113	8-759-929-26	s	IC TL431CPS
IC114	8-752-052-82	■	IC CXA1432M
IC115	8-759-271-04	s	IC LT1252CS8
IC116	8-752-052-82	s	IC CXA1432M
IC117	8-759-271-04	s	IC LT1252CS8
IC118	8-752-052-82	s	IC CXA1432M
IC119	8-759-271-04	s	IC LT1252CS8
IC120	8-759-925-74	■	IC TC74HC04ANS
IC121	8-759-099-38	s	IC SN74HCT374ANS-E05
IC122	8-759-045-17	s	IC NJM79L05UA
IC124	8-759-045-17	s	IC NJM79L05UA
IC126	8-759-045-17	s	IC NJM79L05UA
IC127	8-759-245-45	s	IC TA78L09F
IC128	8-759-926-44	s	IC SN74HC240ANS
IC143	8-759-925-90	s	IC SN74HC74ANS
IC200	8-752-015-81	s	IC CX20158
IC201	8-759-157-17	■	IC PQ05SZ1U

(DAC-20A BOARD(ESBK-7025/7071(CE)))

Ref. No. or Q'ty	Part No.	SP	Description
IC202	8-759-045-17	s	IC NJM79L05UA
IC203	8-752-015-81	s	IC CX20158
IC205	8-759-045-17	s	IC NJM79L05UA
IC206	8-752-015-81	s	IC CX20158
IC208	8-759-045-17	s	IC NJM79L05UA
L100	1-408-413-00	s	INDUCTOR 22uH
L101	1-408-413-00	s	INDUCTOR 22uH
L102	1-410-478-11	■	INDUCTOR 47uH
L103	1-410-478-11	s	INDUCTOR 47uH
L104	1-410-478-11	s	INDUCTOR 47uH
L105	1-410-478-11	s	INDUCTOR 47uH
L200	1-410-478-11	s	INDUCTOR 47uH
L201	1-410-478-11	s	INDUCTOR 47uH
L202	1-410-478-11	s	INDUCTOR 47uH
L206	1-408-424-00	■	INDUCTOR 180uH
Q100	8-729-120-28	■	TRANSISTOR 2SC1623-L5L6
Q101	8-729-120-28	s	TRANSISTOR 2SC1623-L5L6
Q102	8-729-216-22	s	TRANSISTOR 2SA1162
Q103	8-729-120-28	s	TRANSISTOR 2SC1623-L5L6
Q104	8-729-120-28	s	TRANSISTOR 2SC1623-L5L6
Q105	8-729-120-28	s	TRANSISTOR 2SC1623-L5L6
Q106	8-729-216-22	s	TRANSISTOR 2SA1162
Q107	8-729-120-28	s	TRANSISTOR 2SC1623-L5L6
Q108	8-729-216-22	■	TRANSISTOR 2SA1162
Q109	8-729-120-28	s	TRANSISTOR 2SC1623-L5L6
Q110	8-729-120-28	s	TRANSISTOR 2SC1623-L5L6
Q111	8-729-216-22	s	TRANSISTOR 2SA1162
Q112	8-729-120-28	s	TRANSISTOR 2SC1623-L5L6
Q113	8-729-216-22	s	TRANSISTOR 2SA1162
Q116	8-729-120-28	s	TRANSISTOR 2SC1623-L5L6
Q117	8-729-120-28	s	TRANSISTOR 2SC1623-L5L6
Q200	8-729-120-28	s	TRANSISTOR 2SC1623-L5L6
Q201	8-729-216-22	■	TRANSISTOR 2SA1162
Q202	8-729-120-28	s	TRANSISTOR 2SC1623-L5L6
Q203	8-729-907-26	■	TRANSISTOR IMX1
Q204	8-729-120-28	s	TRANSISTOR 2SC1623-L5L6
Q205	8-729-120-28	s	TRANSISTOR 2SC1623-L5L6
Q206	8-729-216-22	■	TRANSISTOR 2SA1162
Q207	8-729-216-22	s	TRANSISTOR 2SA1162
Q208	8-729-216-22	s	TRANSISTOR 2SA1162
Q209	8-729-216-22	s	TRANSISTOR 2SA1162
Q210	8-729-120-28	s	TRANSISTOR 2SC1623-L5L6
Q211	8-729-216-22	s	TRANSISTOR 2SA1162
Q212	8-729-120-28	s	TRANSISTOR 2SC1623-L5L6
Q213	8-729-216-22	s	TRANSISTOR 2SA1162
Q214	8-729-120-28	s	TRANSISTOR 2SC1623-L5L6
Q215	8-729-216-22	s	TRANSISTOR 2SA1162
Q216	8-729-120-28	s	TRANSISTOR 2SC1623-L5L6
Q217	8-729-907-26	s	TRANSISTOR IMX1
Q218	8-729-120-28	s	TRANSISTOR 2SC1623-L5L6
Q219	8-729-120-28	s	TRANSISTOR 2SC1623-L5L6
Q220	8-729-216-22	s	TRANSISTOR 2SA1162
Q221	8-729-216-22	s	TRANSISTOR 2SA1162
Q222	8-729-120-28	s	TRANSISTOR 2SC1623-L5L6
Q223	8-729-216-22	s	TRANSISTOR 2SA1162
Q224	8-729-907-26	s	TRANSISTOR IMX1
Q225	8-729-120-28	s	TRANSISTOR 2SC1623-L5L6
Q226	8-729-120-28	s	TRANSISTOR 2SC1623-L5L6
Q227	8-729-216-22	s	TRANSISTOR 2SA1162

(DAC-20A BOARD(ESBK-7025/7071(CE)))

Ref. No. or Q'ty	Part No.	SP	Description
Q228	8-729-216-22	■	TRANSISTOR 2SA1162
Q229	8-729-120-28	s	TRANSISTOR 2SC1623-L5L6
Q230	8-729-216-22	s	TRANSISTOR 2SA1162
Q231	8-729-120-28	■	TRANSISTOR 2SC1623-L5L6
Q232	8-729-120-28	■	TRANSISTOR 2SC1623-L5L6
Q233	8-729-120-28	s	TRANSISTOR 2SC1623-L5L6
Q234	8-729-120-28	s	TRANSISTOR 2SC1623-L5L6
R104	1-208-775-11	s	METAL, CHIP 510 0.5% 1/10W
R105	1-216-045-00	s	METAL, CHIP 680 5% 1/10W
R106	1-216-041-00	s	METAL, CHIP 470 5% 1/10W
R108	1-216-049-91	s	METAL, CHIP 1k 5% 1/10W
R109	1-216-017-91	■	METAL, CHIP 47 5% 1/10W
R110	1-216-639-11	s	METAL, CHIP 330 0.5% 1/10W
R112	1-216-639-11	s	METAL, CHIP 330 0.5% 1/10W
R113	1-216-295-91	s	RES, CHIP 0
R114	1-216-065-00	s	METAL, CHIP 4.7k 5% 1/10W
R115	1-216-017-91	s	METAL, CHIP 47 5% 1/10W
R116	1-216-641-11	s	METAL, CHIP 390 0.5% 1/10W
R117	1-216-647-11	s	METAL, CHIP 680 0.5% 1/10W
R118	1-216-651-11	s	METAL, CHIP 1k 0.5% 1/10W
R119	1-216-033-00	■	METAL, CHIP 220 5% 1/10W
R120	1-216-041-00	■	METAL, CHIP 470 5% 1/10W
R121	1-216-043-91	■	METAL, CHIP 560 5% 1/10W
R122	1-216-073-00	s	METAL, CHIP 10k 5% 1/10W
R123	1-216-049-91	s	METAL, CHIP 1k 5% 1/10W
R124	1-216-017-91	s	METAL, CHIP 47 5% 1/10W
R125	1-216-639-11	s	METAL, CHIP 330 0.5% 1/10W
R127	1-216-639-11	s	METAL, CHIP 330 0.5% 1/10W
R128	1-216-295-91	s	RES, CHIP 0
R129	1-216-065-00	s	METAL, CHIP 4.7k 5% 1/10W
R130	1-216-017-91	s	METAL, CHIP 47 5% 1/10W
R131	1-216-635-11	s	METAL, CHIP 220 0.5% 1/10W
R132	1-216-647-11	s	METAL, CHIP 680 0.5% 1/10W
R133	1-216-651-11	s	METAL, CHIP 1k 0.5% 1/10W
R134	1-216-025-91	s	METAL, CHIP 100 5% 1/10W
R135	1-216-041-00	s	METAL, CHIP 470 5% 1/10W
R136	1-208-775-11	s	METAL, CHIP 510 0.5% 1/10W
R137	1-216-073-00	s	METAL, CHIP 10k 5% 1/10W
R138	1-216-049-91	s	METAL, CHIP 1k 5% 1/10W
R139	1-216-049-91	s	METAL, CHIP 1k 5% 1/10W
R140	1-216-017-91	s	METAL, CHIP 47 5% 1/10W
R141	1-216-017-91	s	METAL, CHIP 47 5% 1/10W
R142	1-216-639-11	s	METAL, CHIP 330 0.5% 1/10W
R143	1-216-057-00	s	METAL, CHIP 2.2k 5% 1/10W
R144	1-216-639-11	s	METAL, CHIP 330 0.5% 1/10W
R145	1-216-295-91	s	RES, CHIP 0
R146	1-216-065-00	s	METAL, CHIP 4.7k 5% 1/10W
R147	1-216-017-91	s	METAL, CHIP 47 5% 1/10W
R148	1-216-635-11	s	METAL, CHIP 220 0.5% 1/10W
R149	1-216-647-11	s	METAL, CHIP 680 0.5% 1/10W
R150	1-216-651-11	s	METAL, CHIP 1k 0.5% 1/10W
R151	1-216-025-91	s	METAL, CHIP 100 5% 1/10W
R152	1-216-041-00	s	METAL, CHIP 470 5% 1/10W
R153	1-208-775-11	s	METAL, CHIP 510 0.5% 1/10W
R154	1-216-073-00	s	METAL, CHIP 10k 5% 1/10W
R155	1-216-049-91	s	METAL, CHIP 1k 5% 1/10W
R157	1-216-017-91	s	METAL, CHIP 47 5% 1/10W
R158	1-216-049-91	s	METAL, CHIP 1k 5% 1/10W

(DAC-20A BOARD(ESBK-7025/7071(CE)))

Ref. No. or Q'ty	Part No.	SP	Description
R159	1-216-049-91	s	METAL, CHIP 1k 5% 1/10W
R160	1-216-057-00	■	METAL, CHIP 2.2k 5% 1/10W
R161	1-216-049-91	s	METAL, CHIP 1k 5% 1/10W
R162	1-216-057-00	s	METAL, CHIP 2.2k 5% 1/10W
R163	1-216-049-91	■	METAL, CHIP 1k [illegible] 1/10W
R164	1-208-775-11	s	METAL, CHIP 510 0.5% 1/10W
R166	1-216-045-00	s	METAL, CHIP 680 5% 1/10W
R167	1-216-049-91	s	METAL, CHIP 1k 5% 1/10W
R168	1-208-775-11	s	METAL, CHIP 510 0.5% 1/10W
R170	1-216-045-00	s	METAL, CHIP 680 [illegible] 1/10W
R171	1-216-017-91	s	METAL, CHIP 47 5% 1/10W
R176	1-216-097-91	s	METAL, CHIP 100k [illegible] 1/10W
R177	1-216-097-91	s	METAL, CHIP 100k [illegible] 1/10W
R178	1-216-097-91	s	METAL, CHIP 100k 5% 1/10W
R179	1-216-097-91	s	METAL, CHIP 100k 5% 1/10W
R181	1-216-097-91	s	METAL, CHIP 100k 5% 1/10W
R182	1-216-017-91	s	METAL, CHIP 47 5% 1/10W
R183	1-216-295-91	s	RES, CHIP 0
R185	1-216-025-91	s	METAL, CHIP 100 5% 1/10W
R186	1-216-295-91	s	RES, CHIP 0
R191	1-216-073-00	s	METAL, CHIP 10k 5% 1/10W
R192	1-216-073-00	s	METAL, CHIP 10k 5% 1/10W
R193	1-216-295-91	s	RES, CHIP 0
R200	1-216-017-91	s	METAL, CHIP 47 5% 1/10W
R201	1-216-057-00	s	METAL, CHIP 2.2k 5% 1/10W
R202	1-216-017-91	s	METAL, CHIP 47 [illegible] 1/10W
R203	1-216-045-00	s	METAL, CHIP 680 5% 1/10W
R204	1-216-057-00	s	METAL, CHIP 2.2k 5% 1/10W
R205	1-216-049-91	s	METAL, CHIP 1k 5% 1/10W
R206	1-219-369-11	s	METAL, CHIP 1.4k 0.1% 1/10W
R207	1-219-370-11	s	METAL, CHIP 2.91k 0.1% 1/10W
R208	1-216-081-00	s	METAL, CHIP 22k [illegible] 1/10W
R209	1-216-049-91	■	METAL, CHIP 1k 5% 1/10W
R210	1-216-017-91	s	METAL, CHIP 47 5% 1/10W
R211	1-216-041-00	■	METAL, CHIP 470 5% 1/10W
R212	1-216-033-00	■	METAL, CHIP 220 [illegible] 1/10W
R213	1-216-051-00	s	METAL, CHIP 1.2k 5% 1/10W
R214	1-216-041-00	s	METAL, CHIP 470 5% 1/10W
R215	1-216-057-00	s	METAL, CHIP 2.2k 5% 1/10W
R216	1-216-053-00	s	METAL, CHIP 1.5k 5% 1/10W
R217	1-216-049-91	s	METAL, CHIP 1k [illegible] 1/10W
R218	1-216-049-91	s	METAL, CHIP 1k [illegible] 1/10W
R219	1-216-009-00	s	METAL, CHIP 22 [illegible] 1/10W
R220	1-216-051-00	s	METAL, CHIP 1.2k 5% 1/10W
R221	1-216-049-91	s	METAL, CHIP 1k 5% 1/10W
R222	1-216-025-91	s	METAL, CHIP 100 5% 1/10W
R223	1-216-033-00	s	METAL, CHIP 220 [illegible] 1/10W
R227	1-216-049-91	s	METAL, CHIP 1k 5% 1/10W
R228	1-216-049-91	s	METAL, CHIP 1k 5% 1/10W
R229	1-216-017-91	■	METAL, CHIP 47 5% 1/10W
R230	1-216-049-91	s	METAL, CHIP 1k [illegible] 1/10W
R231	1-216-049-91	s	METAL, CHIP 1k 5% 1/10W
R232	1-216-033-00	s	METAL, CHIP 220 [illegible] 1/10W
R233	1-216-049-91	s	METAL, CHIP 1k 5% 1/10W
R234	1-216-017-91	s	METAL, CHIP 47 [illegible] 1/10W
R235	1-216-033-00	s	METAL, CHIP 220 5% 1/10W
R236	1-216-073-00	s	METAL, CHIP 10k 5% 1/10W
R237	1-216-025-91	s	METAL, CHIP 100 5% 1/10W
R238	1-216-057-00	s	METAL, CHIP 2.2k [illegible] 1/10W

(DAC-20A BOARD(ESBK-7025/7071(CE)))

Ref. No. or Q'ty	Part No.	SP	Description
R239	1-216-049-91	s	METAL, CHIP 1k [illegible] 1/10W
R240	1-216-065-00	s	METAL, CHIP 4.7k [illegible] 1/10W
R241	1-216-079-00	s	METAL, CHIP 18k [illegible] 1/10W
R242	1-216-017-91	s	METAL, CHIP 47 5% 1/10W
R243	1-216-057-00	s	METAL, CHIP 2.2k 5% 1/10W
R244	1-216-017-91	s	METAL, CHIP 47 [illegible] 1/10W
R245	1-216-045-00	s	METAL, CHIP 680 5% 1/10W
R246	1-216-057-00	s	METAL, CHIP 2.2k [illegible] 1/10W
R247	1-216-049-91	s	METAL, CHIP 1k 5% 1/10W
R248	1-218-177-11	s	METAL, CHIP 1001 0.1% 1/16W
R249	1-219-368-11	s	METAL, CHIP 713.4 0.1% 1/10W
R250	1-216-017-91	s	METAL, CHIP 47 5% 1/10W
R251	1-216-041-00	s	METAL, CHIP 470 5% 1/10W
R252	1-216-041-00	■	METAL, CHIP 470 [illegible] 1/10W
R253	1-216-057-00	s	METAL, CHIP 2.2k 5% 1/10W
R254	1-216-041-00	■	METAL, CHIP 470 5% 1/10W
R255	1-216-057-00	s	METAL, CHIP 2.2k [illegible] 1/10W
R256	1-216-045-00	s	METAL, CHIP 680 5% 1/10W
R257	1-216-049-91	s	METAL, CHIP 1k 5% 1/10W
R258	1-216-049-91	s	METAL, CHIP 1k 5% 1/10W
R259	1-216-045-00	s	METAL, CHIP 680 5% 1/10W
R260	1-216-009-00	s	METAL, CHIP 22 5% 1/10W
R261	1-216-051-00	s	METAL, CHIP 1.2k 5% 1/10W
R262	1-216-049-91	s	METAL, CHIP 1k 5% 1/10W
R263	1-216-017-91	s	METAL, CHIP 47 5% 1/10W
R264	1-216-049-91	s	METAL, CHIP 1k 5% 1/10W
R265	1-216-033-00	s	METAL, CHIP 220 [illegible] 1/10W
R266	1-216-049-91	s	METAL, CHIP 1k 5% 1/10W
R267	1-216-025-91	s	METAL, CHIP 100 5% 1/10W
R268	1-216-067-00	s	METAL, CHIP 5.6k [illegible] 1/10W
R269	1-216-057-00	s	METAL, CHIP 2.2k [illegible] 1/10W
R270	1-216-033-00	s	METAL, CHIP 220 5% 1/10W
R271	1-216-049-91	s	METAL, CHIP 1k 5% 1/10W
R272	1-216-065-00	s	METAL, CHIP 4.7k [illegible] 1/10W
R273	1-216-049-91	s	METAL, CHIP 1k 5% 1/10W
R274	1-216-017-91	s	METAL, CHIP 47 5% 1/10W
R275	1-216-057-00	s	METAL, CHIP 2.2k [illegible] 1/10W
R276	1-216-017-91	s	METAL, CHIP 47 [illegible] 1/10W
R277	1-216-045-00	s	METAL, CHIP 680 5% 1/10W
R278	1-218-177-11	■	METAL, CHIP 1001 0.1% 1/16W
R279	1-219-367-11	s	METAL, CHIP 564.3 0.1% 1/10W
R280	1-216-017-91	■	METAL, CHIP 47 5% 1/10W
R281	1-216-039-00	s	METAL, CHIP 390 [illegible] 1/10W
R282	1-216-041-00	s	METAL, CHIP 470 [illegible] 1/10W
R283	1-216-057-00	■	METAL, CHIP 2.2k 5% 1/10W
R284	1-216-039-00	s	METAL, CHIP 390 [illegible] 1/10W
R285	1-216-057-00	s	METAL, CHIP 2.2k 5% 1/10W
R286	1-216-053-00	s	METAL, CHIP 1.5k 5% 1/10W
R287	1-216-049-91	s	METAL, CHIP 1k 5% 1/10W
R288	1-216-049-91	s	METAL, CHIP 1k 5% 1/10W
R289	1-216-049-91	s	METAL, CHIP 1k 5% 1/10W
R290	1-216-045-00	s	METAL, CHIP 680 5% 1/10W
R291	1-216-009-00	s	METAL, CHIP 22 5% 1/10W
R292	1-216-051-00	s	METAL, CHIP 1.2k 5% 1/10W
R293	1-216-049-91	■	METAL, CHIP 1k [illegible] 1/10W
R294	1-216-029-00	s	METAL, CHIP 150 5% 1/10W
R296	1-216-033-00	s	METAL, CHIP 220 5% 1/10W
R298	1-216-025-91	s	METAL, CHIP 100 [illegible] 1/10W
R299	1-216-033-00	s	METAL, CHIP 220 [illegible] 1/10W

(DAC-20A BOARD(ESBK-7025/7071(CE)))

Ref. No. or Q'ty	Part No.	SP	Description
R304	1-208-789-11	s	METAL, CHIP 2k 0.5% 1/10W
R306	1-216-049-91	s	METAL, CHIP 1k 5% 1/10W
R307	1-216-057-00	s	METAL, CHIP 2.2k 5% 1/10W
R308	1-216-033-00	s	METAL, CHIP 220 ■ 1/10W
R309	1-216-057-00	■	METAL, CHIP 2.2k 5% 1/10W
R310	1-216-049-91	s	METAL, CHIP 1k 5% 1/10W
R312	1-216-057-00	s	METAL, CHIP 2.2k 5% 1/10W
R313	1-216-057-00	s	METAL, CHIP 2.2k 5% 1/10W
R314	1-216-049-91	s	METAL, CHIP 1k 5% 1/10W
R315	1-216-049-91	■	METAL, CHIP 1k ■ 1/10W
R318	1-216-033-00	■	METAL, CHIP 220 5% 1/10W
R322	1-216-073-00	s	METAL, CHIP 10k 5% 1/10W
R326	1-216-049-91	s	METAL, CHIP 1k 5% 1/10W
R327	1-216-295-91	s	RES, CHIP 0
R328	1-216-031-00	s	METAL, CHIP 180 ■ 1/10W
R329	1-216-025-91	s	METAL, CHIP 100 5% 1/10W
R330	1-216-025-91	s	METAL, CHIP 100 5% 1/10W
R333	1-216-033-00	s	METAL, CHIP 220 5% 1/10W
R334	1-216-057-00	■	METAL, CHIP 2.2k 5% 1/10W
R335	1-216-065-00	s	METAL, CHIP 4.7k ■ 1/10W
R336	1-216-033-00	s	METAL, CHIP 220 5% 1/10W
R337	1-216-097-91	s	METAL, CHIP 100k 5% 1/10W
R338	1-216-097-91	s	METAL, CHIP 100k 5% 1/10W
RB100	1-239-426-11	s	RESISTOR BLOCK, CHIP 2.2kx4
RB101	1-239-426-11	s	RESISTOR BLOCK, CHIP 2.2kx4
RB102	1-239-426-11	s	RESISTOR BLOCK, CHIP 2.2kx4
RB103	1-239-426-11	■	RESISTOR BLOCK, CHIP 2.2kx4
RV100	1-241-761-11	s	RES, ADJ, METAL 1k
RV101	1-241-759-21	s	RES, ADJ, METAL 220
RV102	1-241-761-11	s	RES, ADJ, METAL 1k
RV103	1-241-759-21	■	RES, ADJ, METAL 220
RV201	1-241-759-21	s	RES, ADJ, METAL 220
RV202	1-241-759-21	s	RES, ADJ, METAL 220
RV203	1-241-759-21	■	RES, ADJ, METAL 220
RV204	1-241-761-11	s	RES, ADJ, METAL 1k
RV205	1-241-759-21	■	RES, ADJ, METAL 220
RV206	1-241-761-11	s	RES, ADJ, METAL 1k
RV208	1-241-760-11	s	RES, ADJ, METAL 470

DSC-75 BOARD(ES-7(UC/J))

Ref. No. or Q'ty	Part No.	SP	Description
1pc	A-8273-915-A	o	MOUNTED CIRCUIT BOARD, DSC-75
C1	1-126-204-11	s	ELECT 47uF 20% 16V
C2	1-126-204-11	s	ELECT 47uF 20% 16V
C3	1-126-204-11	s	ELECT 47uF 20% 16V
C4-27	1-164-232-11	s	CERAMIC, CHIP 0.01uF 10% 100V
C40-51	1-164-232-11	s	CERAMIC, CHIP 0.01uF 10% 100V
C52-57	1-163-038-91	s	CERAMIC, CHIP 0.1uF 25V
C58	1-126-204-11	s	ELECT 47uF 20% 16V
C59	1-163-038-91	s	CERAMIC, CHIP 0.1uF 25V
C60	1-126-204-11	s	ELECT 47uF 20% 16V
C61-66	1-163-038-91	s	CERAMIC, CHIP 0.1uF 25V
CN1	1-766-364-11	■	CONNECTOR, BB 100P, HERMAPHRODITE
CN2	1-766-364-11	s	CONNECTOR, BB 100P, HERMAPHRODITE
IC2	8-759-367-86	s	IC UPD482445G5-60-7JG
IC3	8-759-367-86	s	IC UPD482445G5-60-7JG
IC5	8-759-367-86	s	IC UPD482445G5-60-7JG
IC6	8-759-367-86	s	IC UPD482445G5-60-7JG
IC11	8-759-367-86	s	IC UPD482445G5-60-7JG
IC12	8-759-367-86	s	IC UPD482445G5-60-7JG
IC13	8-759-359-54	s	IC SN74ALS244CNS-E20
L1	1-500-202-11	■	BEAD, FERRITE
L2	1-500-202-11	■	BEAD, FERRITE
L3	1-500-202-11	s	BEAD, FERRITE
L4	1-500-202-11	s	BEAD, FERRITE
R1-31	1-216-009-00	■	METAL, CHIP 22 5% 1/10W

DSC-75A BOARD(ES-7(CE))

Ref. No. or Q'ty	Part No.	SP	Description
1pc	A-8273-944-A	o	MOUNTED CIRCUIT BOARD, DSC-75A
C1	1-126-204-11	■	ELECT 47uF 20% 16V
C2	1-126-204-11	s	ELECT 47uF 20% 16V
C3	1-126-204-11	s	ELECT 47uF 20% 16V
C4-27	1-164-232-11	s	CERAMIC, CHIP 0.01uF 10% 100V
C40-51	1-164-232-11	s	CERAMIC, CHIP 0.01uF 10% 100V
C52-57	1-163-038-91	s	CERAMIC, CHIP 0.1uF 25V
C58	1-126-204-11	s	ELECT 47uF 20% 16V
C59	1-163-038-91	s	CERAMIC, CHIP 0.1uF 25V
C60	1-126-204-11	s	ELECT 47uF 20% 16V
C61-66	1-163-038-91	s	CERAMIC, CHIP 0.1uF 25V
CN1	1-766-364-11	s	CONNECTOR, BB 100P, HERMAPHRODITE
CN2	1-766-364-11	s	CONNECTOR, BB 100P, HERMAPHRODITE
IC1	8-759-367-86	s	IC UPD482445G5-60-7JG
IC2	8-759-367-86	s	IC UPD482445G5-60-7JG
IC3	8-759-367-86	s	IC UPD482445G5-60-7JG
IC4	8-759-367-86	s	IC UPD482445G5-60-7JG
IC5	8-759-367-86	s	IC UPD482445G5-60-7JG
IC6	8-759-367-86	s	IC UPD482445G5-60-7JG
IC10	8-759-367-86	s	IC UPD482445G5-60-7JG
IC11	8-759-367-86	s	IC UPD482445G5-60-7JG
IC12	8-759-367-86	■	IC UPD482445G5-60-7JG
IC13	8-759-359-54	s	IC SN74ALS244CNS-E20
L1	1-500-202-11	s	BEAD, FERRITE
L2	1-500-202-11	s	BEAD, FERRITE
L3	1-500-202-11	s	BEAD, FERRITE
L4	1-500-202-11	s	BEAD, FERRITE
R1-31	1-216-009-00	s	METAL, CHIP 22 5% 1/10W

FM-43/43A BOARD(ESBK-7021(UC/J/CE))

Ref. No. or Q'ty	Part No.	SP	Description
1pc	A-8273-891-A	o	MOUNTED CIRCUIT BOARD, FM-43 (For UC/J)
1pc	A-8273-897-A	o	MOUNTED CIRCUIT BOARD, FM-43A(For CE)
2pcs	8-759-289-81	■	IC M27C1024-80XF1
2pcs	3-172-089-01	■	HANDLE
4pcs	7-621-770-87	s	SCREW +B 2.6x5
3pcs	7-682-948-01	s	SCREW +PSW 3x8
6pcs	7-682-947-01	s	SCREW +PSW 3x6
C1-6	1-163-038-91	s	CERAMIC, CHIP 0.1uF 25V
C7	1-128-401-11	■	ELECT 100uF 20% 25V
C8	1-163-038-91	s	CERAMIC, CHIP 0.1uF 25V
C9	1-128-401-11	s	ELECT 100uF 20% 25V
C10	1-163-038-91	■	CERAMIC, CHIP 0.1uF 25V
C11-19	1-126-396-11	■	ELECT, CHIP 47uF 20% 16V
C101-109	1-163-038-91	s	CERAMIC, CHIP 0.1uF 25V
C110	1-163-227-11	s	CERAMIC, CHIP 10pF 5% 50V
C112-117	1-163-038-91	s	CERAMIC, CHIP 0.1uF 25V
C119-125	1-163-038-91	s	CERAMIC, CHIP 0.1uF 25V
C127-133	1-163-038-91	s	CERAMIC, CHIP 0.1uF 25V
C134	1-126-396-11	s	ELECT, CHIP 47uF 20% 16V
C135	1-163-038-91	■	CERAMIC, CHIP 0.1uF 25V
C136	1-126-396-11	s	ELECT, CHIP 47uF 20% 16V
C137	1-163-038-91	s	CERAMIC, CHIP 0.1uF 25V
C138	1-163-038-91	s	CERAMIC, CHIP 0.1uF 25V
C139	1-163-038-91	■	CERAMIC, CHIP 0.1uF 25V
C201-217	1-163-038-91	s	CERAMIC, CHIP 0.1uF 25V
C219	1-163-038-91	■	CERAMIC, CHIP 0.1uF 25V
C220-230	1-163-038-91	s	CERAMIC, CHIP 0.1uF 25V
C301	1-163-037-11	■	CERAMIC, CHIP 0.022uF 10% 25V
C302	1-163-037-11	■	CERAMIC, CHIP 0.022uF 10% 25V
C303	1-163-038-91	s	CERAMIC, CHIP 0.1uF 25V
C304	1-163-038-91	s	CERAMIC, CHIP 0.1uF 25V
C305	1-163-038-91	s	CERAMIC, CHIP 0.1uF 25V
C307-327	1-163-038-91	■	CERAMIC, CHIP 0.1uF 25V
C329-355	1-163-038-91	s	CERAMIC, CHIP 0.1uF 25V
C357	1-163-038-91	s	CERAMIC, CHIP 0.1uF 25V
C358	1-163-038-91	s	CERAMIC, CHIP 0.1uF 25V
C359	1-163-038-91	s	CERAMIC, CHIP 0.1uF 25V
C360	1-163-038-91	s	CERAMIC, CHIP 0.1uF 25V
C363	1-135-085-21	s	TANTALUM, CHIP 4.7uF 10% 25V
C364	1-135-085-21	s	TANTALUM, CHIP 4.7uF 10% 25V
C401-438	1-163-038-91	s	CERAMIC, CHIP 0.1uF 25V
C500	1-163-037-11	s	CERAMIC, CHIP 0.022uF 10% 25V
C501	1-163-037-11	s	CERAMIC, CHIP 0.022uF 10% 25V
C503	1-163-038-91	s	CERAMIC, CHIP 0.1uF 25V
C504	1-163-038-91	■	CERAMIC, CHIP 0.1uF 25V
C505	1-163-038-91	■	CERAMIC, CHIP 0.1uF 25V
C506	1-135-085-21	s	TANTALUM, CHIP 4.7uF 10% 25V
C507	1-163-038-91	s	CERAMIC, CHIP 0.1uF 25V
C508	1-163-038-91	s	CERAMIC, CHIP 0.1uF 25V
C509	1-163-038-91	s	CERAMIC, CHIP 0.1uF 25V
C511	1-163-038-91	■	CERAMIC, CHIP 0.1uF 25V
C512	1-163-038-91	s	CERAMIC, CHIP 0.1uF 25V
C513	1-163-038-91	s	CERAMIC, CHIP 0.1uF 25V
C514	1-163-038-91	s	CERAMIC, CHIP 0.1uF 25V
C515	1-135-085-21	■	TANTALUM, CHIP 4.7uF 10% 25V
CN1	1-564-009-11	o	CONNECTOR 10P, MALE
CN701	1-778-261-11	o	CONNECTOR, BB 124P, MALE
CN702	1-778-261-11	o	CONNECTOR, BB 124P, MALE
CN703	1-778-261-11	o	CONNECTOR, BB 124P, MALE

(FM-43/43A BOARD(ESBK-7021(UC/J/CE)))

Ref. No. or Q'ty	Part No.	SP	Description
CNI1	1-526-662-21	o	SOCKET, IC (DP) 40P
CNI2	1-526-662-21	o	SOCKET, IC (DP) 40P
CNI3	1-526-660-21	o	SOCKET, IC 32P
CNI4	1-526-660-21	o	SOCKET, IC 32P
CNI5	1-526-660-21	■	SOCKET, IC 32P
CNI6	1-526-660-21	o	SOCKET, IC 32P
E9-15	1-535-877-22	o	CHIP, CHECKER
FL500-507	1-239-642-21	s	EMIFIL ARRAY, CHIP
IC1	8-759-425-63	o	IC 27C1024-ES7B-FM1V1.00
IC2	8-759-425-64	■	IC 27C1024-ES7B-FM2V1.00
IC3	8-759-425-65	o	IC 27C4001-ES7BN-FM3V1.00(for UC/J)
IC3	8-759-425-67	■	IC 27C4001-ES7BP-FM3V2.00(for CE)
IC4	8-759-425-66	■	IC 27C4001-ES7BN-FM4V1.00(for UC/J)
IC4	8-759-425-68	o	IC 27C4001-ES7BP-FM4V2.00(for CE)
IC101	8-759-061-87	s	IC UPD70116C-10
IC102	8-759-926-49	s	IC SN74HC245NS
IC103	8-759-926-49	s	IC SN74HC245NS
IC104	8-759-926-68	s	IC SN74HC375ANS
IC105	8-759-926-66	s	IC SN74HC373ANS
IC106	8-759-926-66	s	IC SN74HC373ANS
IC107	8-759-925-78	s	IC SN74HC10ANS
IC108	8-759-926-11	s	IC SN74HC138ANS
IC109	8-759-925-85	s	IC SN74HC32ANS
IC112	8-752-337-79	s	IC CXK58257AM-10LL
IC113	8-752-337-79	■	IC CXK58257AM-10LL
IC114	8-759-973-71	s	IC TL7705CPS-B
IC115	8-759-149-06	s	IC UPD71054C-10
IC116	8-759-149-08	s	IC UPD71059C-10
IC117	8-759-149-04	s	IC UPD71051C-10
IC119	8-759-030-26	s	IC MC34050ML
IC120	8-759-385-51	s	IC IDT71321SA55J-TL
IC121	8-759-926-67	s	IC SN74HC374ANS
IC122	8-759-926-67	s	IC SN74HC374ANS
IC123	8-759-926-67	s	IC SN74HC374ANS
IC124	8-759-926-67	s	IC SN74HC374ANS
IC125	8-759-925-90	s	IC SN74HC74ANS
IC127	8-759-926-48	s	IC SN74HC244NS
IC128	8-759-925-85	s	IC SN74HC32ANS
IC129	8-759-926-48	s	IC SN74HC244NS
IC130	8-759-926-48	s	IC SN74HC244NS
IC131	8-759-926-49	s	IC SN74HC245NS
IC132	8-759-926-67	s	IC SN74HC374ANS
IC133	8-759-926-48	s	IC SN74HC244NS
IC201	8-759-061-87	s	IC UPD70116C-10
IC202	8-759-926-49	■	IC SN74HC245NS
IC203	8-759-926-49	s	IC SN74HC245NS
IC204	8-759-926-68	s	IC SN74HC375ANS
IC205	8-759-926-66	s	IC SN74HC373ANS
IC206	8-759-926-66	s	IC SN74HC373ANS
IC207	8-759-926-12	s	IC SN74HC139ANS
IC208	8-759-926-12	s	IC SN74HC139ANS
IC209	8-759-925-81	s	IC SN74HC20ANS
IC210	8-759-926-12	s	IC SN74HC139ANS
IC211	8-759-926-11	s	IC SN74HC138ANS
IC212	8-759-925-79	s	IC SN74HC11ANS
IC213	8-759-925-85	s	IC SN74HC32ANS

(FM-43/43A BOARD(ESBK-7021(UC/J/CE)))

Ref. No. or Q'ty	Part No.	SP	Description
IC214	8-752-337-79	s	IC CXK58257AM-10LL
IC215	8-752-337-79	s	IC CXK58257AM-10LL
IC216	8-759-925-85	s	IC SN74HC32ANS
IC217	8-759-926-48	s	IC SN74HC244NS
IC219	8-759-926-67	■	IC SN74HC374ANS
IC220	8-759-926-67	s	IC SN74HC374ANS
IC221	8-759-926-48	s	IC SN74HC244NS
IC222	8-759-926-48	s	IC SN74HC244NS
IC223	8-759-926-48	s	IC SN74HC244NS
IC224	8-759-926-48	s	IC SN74HC244NS
IC225	8-759-926-67	s	IC SN74HC374ANS
IC226	8-759-926-48	s	IC SN74HC244NS
IC227	8-759-926-48	s	IC SN74HC244NS
IC228	8-759-926-48	s	IC SN74HC244NS
IC229	8-759-926-48	s	IC SN74HC244NS
IC230	8-759-926-48	■	IC SN74HC244NS
IC301	8-759-934-41	s	IC SN74ALS240ANS
IC302	8-759-934-41	s	IC SN74ALS240ANS
IC303	8-759-927-12	s	IC SN74HCT244ANS
IC304	8-759-926-11	s	IC SN74HC138ANS
IC305	8-759-359-54	s	IC SN74ALS244CNS-E20
IC307	8-759-934-41	■	IC SN74ALS240ANS
IC308	8-759-934-41	■	IC SN74ALS240ANS
IC309	8-759-934-41	s	IC SN74ALS240ANS
IC310	8-759-359-54	s	IC SN74ALS244CNS-E20
IC311	8-759-359-54	s	IC SN74ALS244CNS-E20
IC312	8-759-359-54	s	IC SN74ALS244CNS-E20
IC313	8-759-359-54	s	IC SN74ALS244CNS-E20
IC314	8-759-359-54	s	IC SN74ALS244CNS-E20
IC315	8-759-359-54	s	IC SN74ALS244CNS-E20
IC316	8-759-359-54	■	IC SN74ALS244CNS-E20
IC317	8-759-359-54	s	IC SN74ALS244CNS-E20
IC318	8-759-359-54	s	IC SN74ALS244CNS-E20
IC319	8-759-359-54	s	IC SN74ALS244CNS-E20
IC320	8-759-099-38	s	IC SN74HCT374ANS-E05
IC321	8-759-099-38	■	IC SN74HCT374ANS-E05
IC322	8-759-989-06	s	IC 74F283SJ
IC323	8-759-989-06	s	IC 74F283SJ
IC324	8-759-989-06	s	IC 74F283SJ
IC325	8-759-989-06	s	IC 74F283SJ
IC326	8-759-926-11	s	IC SN74HC138ANS
IC327	8-759-359-54	■	IC SN74ALS244CNS-E20
IC329	8-759-934-41	■	IC SN74ALS240ANS
IC330	8-759-934-41	s	IC SN74ALS240ANS
IC331	8-759-934-41	s	IC SN74ALS240ANS
IC332	8-759-359-54	s	IC SN74ALS244CNS-E20
IC333	8-759-359-54	s	IC SN74ALS244CNS-E20
IC334	8-759-359-54	s	IC SN74ALS244CNS-E20
IC335	8-759-359-54	s	IC SN74ALS244CNS-E20
IC336	8-759-359-54	s	IC SN74ALS244CNS-E20
IC337	8-759-359-54	s	IC SN74ALS244CNS-E20
IC338	8-759-359-54	s	IC SN74ALS244CNS-E20
IC339	8-759-359-54	s	IC SN74ALS244CNS-E20
IC340	8-759-359-54	■	IC SN74ALS244CNS-E20
IC341	8-759-359-54	s	IC SN74ALS244CNS-E20
IC342	8-759-099-38	s	IC SN74HCT374ANS-E05
IC343	8-759-099-38	■	IC SN74HCT374ANS-E05
IC344	8-759-989-06	■	IC 74F283SJ
IC345	8-759-989-06	s	IC 74F283SJ

(FM-43/43A BOARD(ESBK-7021(UC/J/CE)))

Ref. No. or Q'ty	Part No.	SP	Description
IC346	8-759-989-06	s	IC 74F283SJ
IC347	8-759-989-06	s	IC 74F283SJ
IC348	8-759-049-11	s	IC SN74ALS157ANS
IC349	8-759-049-11	s	IC SN74ALS157ANS
IC350	8-759-049-11	s	IC SN74ALS157ANS
IC351	8-759-049-11	s	IC SN74ALS157ANS
IC352	8-759-099-38	s	IC SN74HCT374ANS-E05
IC353	8-759-099-38	s	IC SN74HCT374ANS-E05
IC354	8-759-099-38	s	IC SN74HCT374ANS-E05
IC355	8-759-099-38	s	IC SN74HCT374ANS-E05
IC357	8-759-099-38	s	IC SN74HCT374ANS-E05
IC358	8-759-099-38	s	IC SN74HCT374ANS-E05
IC359	8-759-099-38	s	IC SN74HCT374ANS-E05
IC360	8-759-099-38	s	IC SN74HCT374ANS-E05
IC401	8-759-926-11	s	IC SN74HC138ANS
IC402	8-759-926-11	s	IC SN74HC138ANS
IC403	8-759-926-67	s	IC SN74HC374ANS
IC404	8-759-294-69	■	IC CXD8879Q
IC405	8-752-340-75	s	IC CXK1206AM
IC406	8-752-340-75	s	IC CXK1206AM
IC407	8-752-340-75	s	IC CXK1206AM
IC408	8-752-340-75	s	IC CXK1206AM
IC409	8-752-340-75	s	IC CXK1206AM
IC410	8-752-340-75	s	IC CXK1206AM
IC411	8-759-294-69	s	IC CXD8879Q
IC412	8-752-340-75	s	IC CXK1206AM
IC413	8-752-340-75	s	IC CXK1206AM
IC414	8-752-340-75	s	IC CXK1206AM
IC415	8-752-340-75	■	IC CXK1206AM
IC416	8-752-340-75	s	IC CXK1206AM
IC417	8-752-340-75	s	IC CXK1206AM
IC418	8-759-926-62	s	IC SN74HC365ANS
IC419	8-759-926-62	s	IC SN74HC365ANS
IC420	8-759-063-42	s	IC CXD8264Q
IC421	8-759-926-48	s	IC SN74HC244NS
IC422	8-759-926-48	s	IC SN74HC244NS
IC423	8-759-053-58	s	IC IDT6116SA25SO
IC424	8-759-053-58	s	IC IDT6116SA25SO
IC425	8-759-985-36	s	IC 74AC157SJ
IC426	8-759-985-36	s	IC 74AC157SJ
IC427	8-759-985-36	s	IC 74AC157SJ
IC428	8-759-925-74	s	IC TC74HC04ANS
IC429	8-759-926-48	s	IC SN74HC244NS
IC430	8-759-926-48	s	IC SN74HC244NS
IC431	8-759-053-58	s	IC IDT6116SA25SO
IC432	8-759-053-58	s	IC IDT6116SA25SO
IC433	8-759-985-67	s	IC 74AC374SJ
IC434	8-759-985-67	■	IC 74AC374SJ
IC435	8-759-363-50	s	IC 74ACT399SJX
IC436	8-759-174-16	s	IC TC74VHC244F
IC500	8-759-359-54	s	IC SN74ALS244CNS-E20
IC501	8-759-359-54	s	IC SN74ALS244CNS-E20
IC503	8-759-294-68	s	IC CXD8925Q
IC504	8-759-294-69	s	IC CXD8879Q
IC505	8-759-294-68	s	IC CXD8925Q
IC507	8-752-340-75	■	IC CXK1206AM
IC508	8-759-294-69	s	IC CXD8879Q
IC509	8-759-926-67	s	IC SN74HC374ANS
IC511	8-752-340-75	s	IC CXK1206AM

(FM-43/43A BOARD(ESBK-7021(UC/J/CE)))

Ref. No. or Q'ty	Part No.	SP	Description
IC512	8-752-340-75	s	IC CXK1206AM
L1	1-412-525-31	s	INDUCTOR 10uH
L2	1-412-525-31	s	INDUCTOR 10uH
L301	1-500-202-11	s	BEAD, FERRITE
L302	1-500-202-11	■	BEAD, FERRITE
L501	1-500-202-11	s	BEAD, FERRITE
L502	1-500-202-11	s	BEAD, FERRITE
L503	1-500-202-11	s	BEAD, FERRITE
L504	1-500-202-11	s	BEAD, FERRITE
PS1	⚠ 1-532-686-21	■	LINK, IC 2.7A
R101	1-216-627-11	s	METAL, CHIP 100 0.5% 1/10W
R102	1-216-667-11	s	METAL, CHIP 4.7k 0.5% 1/10W
R103	1-216-667-11	s	METAL, CHIP 4.7k 0.5% 1/10W
R105	1-208-806-11	s	METAL, CHIP 10k 0.5% 1/10W
R106	1-208-806-11	s	METAL, CHIP 10k 0.5% 1/10W
R107	1-216-639-11	s	METAL, CHIP 330 0.5% 1/10W
R108	1-208-806-11	■	METAL, CHIP 10k 0.5% 1/10W
R110	1-216-619-11	s	METAL, CHIP 47 0.5% 1/10W
R111	1-216-699-11	s	METAL, CHIP 100k 0.5% 1/10W
R112	1-216-699-11	s	METAL, CHIP 100k 0.5% 1/10W
R113	1-208-806-11	s	METAL, CHIP 10k 0.5% 1/10W
R201	1-216-651-11	■	METAL, CHIP 1k 0.5% 1/10W
R401	1-216-699-11	s	METAL, CHIP 100k 0.5% 1/10W
RB103	1-239-309-11	s	RESISTOR BLOCK, CHIP 100kx8
RB104	1-239-309-11	■	RESISTOR BLOCK, CHIP 100kx8
RB105	1-239-309-11	■	RESISTOR BLOCK, CHIP 100kx8
RB300	1-239-421-11	s	RESISTOR BLOCK, CHIP 680x4
RB301	1-239-421-11	s	RESISTOR BLOCK, CHIP 680x4
RB302	1-239-421-11	■	RESISTOR BLOCK, CHIP 680x4
RB303	1-239-621-11	s	RESISTOR BLOCK, CHIP 22x4
RB304	1-239-621-11	s	RESISTOR BLOCK, CHIP 22x4
RB305	1-239-621-11	■	RESISTOR BLOCK, CHIP 22x4
RB306	1-239-621-11	s	RESISTOR BLOCK, CHIP 22x4
RB307	1-239-421-11	s	RESISTOR BLOCK, CHIP 680x4
RB308	1-239-621-11	s	RESISTOR BLOCK, CHIP 22x4
RB309	1-239-621-11	s	RESISTOR BLOCK, CHIP 22x4
RB310	1-239-422-11	s	RESISTOR BLOCK, CHIP 820x4
RB311	1-239-422-11	s	RESISTOR BLOCK, CHIP 820x4
RB312	1-239-422-11	s	RESISTOR BLOCK, CHIP 820x4
RB313	1-239-422-11	s	RESISTOR BLOCK, CHIP 820x4
RB314	1-239-621-11	s	RESISTOR BLOCK, CHIP 22x4
RB500-515	1-239-621-11	s	RESISTOR BLOCK, CHIP 22x4
TP101	1-535-877-22	o	CHIP, CHECKER
TP201	1-535-877-22	o	CHIP, CHECKER
TP202	1-535-877-22	o	CHIP, CHECKER
TP203	1-535-877-22	o	CHIP, CHECKER
TP401	1-535-877-22	o	CHIP, CHECKER
TP402	1-535-877-22	o	CHIP, CHECKER
TP403	1-535-877-22	o	CHIP, CHECKER
TP404	1-535-877-22	o	CHIP, CHECKER
TP501-506	1-535-877-22	■	CHIP, CHECKER
X101	1-767-134-11	s	OSCILLATOR, CRYSTAL 10.00MHz

FM-44/44A BOARD(ESBK-7023(UC/J/CE))

Ref. No. or Q'ty	Part No.	SP	Description
1pc	A-8273-882-A	o	MOUNTED CIRCUIT BOARD, FM-44 (For UC/J)
1pc	A-8273-888-A	o	MOUNTED CIRCUIT BOARD, FM-44A(For CE)
2pcs	8-759-289-81	s	IC M27C1024-80XF1
2pcs	3-172-089-01	■	HANDLE
4pcs	7-621-770-87	■	SCREW +B 2.6x5
3pcs	7-682-948-01	s	SCREW +PSW 3x8
6pcs	7-682-947-01	s	SCREW +PSW 3x6
C1	1-163-038-91	s	CERAMIC, CHIP 0.1uF 25V
C2	1-163-038-91	s	CERAMIC, CHIP 0.1uF 25V
C3	1-163-038-91	s	CERAMIC, CHIP 0.1uF 25V
C4	1-163-038-91	■	CERAMIC, CHIP 0.1uF 25V
C11	1-128-401-11	s	ELECT 100uF 20% 25V
C12	1-163-038-91	■	CERAMIC, CHIP 0.1uF 25V
C13	1-128-401-11	s	ELECT 100uF 20% 25V
C14	1-163-038-91	■	CERAMIC, CHIP 0.1uF 25V
C21-29	1-126-396-11	■	ELECT, CHIP 47uF 20% 16V
C100-106	1-163-038-91	■	CERAMIC, CHIP 0.1uF 25V
C107	1-163-227-11	s	CERAMIC, CHIP 10pF 5% 50V
C108-113	1-163-038-91	s	CERAMIC, CHIP 0.1uF 25V
C115-125	1-163-038-91	s	CERAMIC, CHIP 0.1uF 25V
C201-236	1-163-038-91	s	CERAMIC, CHIP 0.1uF 25V
C239	1-163-038-91	s	CERAMIC, CHIP 0.1uF 25V
C300	1-163-037-11	■	CERAMIC, CHIP 0.022uF 10% 25V
C301	1-163-037-11	s	CERAMIC, CHIP 0.022uF 10% 25V
C302-356	1-163-038-91	s	CERAMIC, CHIP 0.1uF 25V
C370	1-135-085-21	■	TANTALUM, CHIP 4.7uF 10% 25V
C371	1-135-085-21	s	TANTALUM, CHIP 4.7uF 10% 25V
C401-439	1-163-038-91	■	CERAMIC, CHIP 0.1uF 25V
C501	1-163-038-91	s	CERAMIC, CHIP 0.1uF 25V
C502	1-163-037-11	s	CERAMIC, CHIP 0.022uF 10% 25V
C503	1-163-038-91	s	CERAMIC, CHIP 0.1uF 25V
C504	1-163-038-91	s	CERAMIC, CHIP 0.1uF 25V
C505	1-163-038-91	s	CERAMIC, CHIP 0.1uF 25V
C506	1-163-038-91	s	CERAMIC, CHIP 0.1uF 25V
C507	1-163-037-11	s	CERAMIC, CHIP 0.022uF 10% 25V
C508-518	1-163-038-91	s	CERAMIC, CHIP 0.1uF 25V
C519	1-163-037-11	s	CERAMIC, CHIP 0.022uF 10% 25V
C520	1-163-037-11	s	CERAMIC, CHIP 0.022uF 10% 25V
C552	1-135-085-21	s	TANTALUM, CHIP 4.7uF 10% 25V
C557	1-135-085-21	■	TANTALUM, CHIP 4.7uF 10% 25V
C561	1-135-085-21	s	TANTALUM, CHIP 4.7uF 10% 25V
C567	1-135-085-21	s	TANTALUM, CHIP 4.7uF 10% 25V
C568	1-135-085-21	s	TANTALUM, CHIP 4.7uF 10% 25V
C569	1-135-085-21	s	TANTALUM, CHIP 4.7uF 10% 25V
C570	1-135-085-21	■	TANTALUM, CHIP 4.7uF 10% 25V
CN701	1-778-261-11	o	CONNECTOR, BB 124P, MALE
CN702	1-778-261-11	■	CONNECTOR, BB 124P, MALE
CN703	1-778-261-11	o	CONNECTOR, BB 124P, MALE
CNI1	1-526-662-21	o	SOCKET, IC (DP) 40P
CNI2	1-526-662-21	o	SOCKET, IC (DP) 40P
CNI3	1-526-660-21	o	SOCKET, IC 32P
CNI4	1-526-660-21	■	SOCKET, IC 32P
E9	1-535-877-22	o	CHIP, CHECKER
FL511	1-239-642-21	s	EMIFIL ARRAY, CHIP
FL513	1-239-642-21	s	EMIFIL ARRAY, CHIP
FL515	1-239-642-21	s	EMIFIL ARRAY, CHIP
FL517	1-239-642-21	s	EMIFIL ARRAY, CHIP
FL519	1-239-642-21	s	EMIFIL ARRAY, CHIP

Ref. No. or Q'ty	Part No.	SP	Description
FL521	1-239-642-21	s	EMIFIL ARRAY, CHIP
FL523	1-239-642-21	s	EMIFIL ARRAY, CHIP
IC1	8-759-438-38	o	IC 27C1024-ES7A-FM1V1.01
IC2	8-759-438-39	■	IC 27C1024-ES7A-FM2V1.01
IC3	8-759-425-80	■	IC 27C4001-ES7AN-FM3V1.00(for UC/J)
IC3	8-759-425-41	o	IC 27C4001-ES7AP-FM3V2.00(for CE)
IC4	8-759-425-32	o	IC 27C4001-ES7AN-FM4V1.00(for UC/J)
IC4	8-759-425-42	o	IC 27C4001-ES7AP-FM4V2.00(for CE)
IC101	8-759-385-54	■	IC UPD70116GC-10-3B6
IC102	8-759-926-49	s	IC SN74HC245NS
IC103	8-759-926-49	■	IC SN74HC245NS
IC104	8-759-926-68	s	IC SN74HC375ANS
IC105	8-759-926-80	s	IC SN74HC573BNS
IC106	8-759-926-80	s	IC SN74HC573BNS
IC108	8-759-926-11	s	IC SN74HC138ANS
IC109	8-759-925-85	s	IC SN74HC32ANS
IC110	8-759-925-85	s	IC SN74HC32ANS
IC111	8-759-926-77	s	IC SN74HC541ANS
IC112	8-752-337-79	■	IC CXK58257AM-10LL
IC113	8-752-337-79	■	IC CXK58257AM-10LL
IC115	8-759-926-82	■	IC SN74HC574ANS
IC116	8-759-926-82	s	IC SN74HC574ANS
IC117	8-759-925-90	s	IC SN74HC74ANS
IC118	8-759-926-82	s	IC SN74HC574ANS
IC119	8-759-926-82	s	IC SN74HC574ANS
IC120	8-759-385-51	■	IC IDT71321SA55J-TL
IC121	8-759-926-49	s	IC SN74HC245NS
IC122	8-759-926-77	s	IC SN74HC541ANS
IC123	8-759-926-77	s	IC SN74HC541ANS
IC124	8-759-926-28	s	IC SN74HC174ANS
IC125	8-759-926-76	■	IC SN74HC540ANS
IC201	8-759-385-54	s	IC UPD70116GC-10-3B6
IC202	8-759-926-49	s	IC SN74HC245NS
IC203	8-759-926-49	s	IC SN74HC245NS
IC204	8-759-926-68	s	IC SN74HC375ANS
IC205	8-759-926-80	s	IC SN74HC573BNS
IC206	8-759-926-80	s	IC SN74HC573BNS
IC207	8-759-926-76	s	IC SN74HC540ANS
IC208	8-759-925-78	s	IC SN74HC10ANS
IC209	8-759-925-85	s	IC SN74HC32ANS
IC210	8-759-925-81	■	IC SN74HC20ANS
IC211	8-759-926-11	s	IC SN74HC138ANS
IC212	8-759-926-11	s	IC SN74HC138ANS
IC213	8-759-926-77	s	IC SN74HC541ANS
IC214	8-752-337-79	s	IC CXK58257AM-10LL
IC215	8-752-337-79	s	IC CXK58257AM-10LL
IC216	8-759-926-82	s	IC SN74HC574ANS
IC217	8-759-926-82	■	IC SN74HC574ANS
IC218	8-759-515-12	■	IC SN74ALS574BNS
IC219	8-759-515-12	s	IC SN74ALS574BNS
IC220	8-759-385-51	s	IC IDT71321SA55J-TL
IC221	8-759-385-51	s	IC IDT71321SA55J-TL
IC222	8-759-925-90	s	IC SN74HC74ANS
IC223	8-759-925-90	s	IC SN74HC74ANS
IC224	8-759-927-46	s	IC SN74HC00ANS
IC225	8-759-185-84	s	IC TC74VHC161F(EL)
IC226	8-759-185-84	s	IC TC74VHC161F(EL)
IC227	8-759-185-84	s	IC TC74VHC161F(EL)

(FM-44/44A BOARD(ESBK-7023(UC/J/CE)))

Ref. No. or Q'ty	Part No.	SP	Description
IC228	8-759-926-82	s	IC SN74HC574ANS
IC229	8-759-926-82	s	IC SN74HC574ANS
IC230	8-759-515-12	s	IC SN74ALS574BNS
IC231	8-759-926-69	s	IC SN74HC377ANS
IC232	8-759-926-69	s	IC SN74HC377ANS
IC233	8-759-926-77	s	IC SN74HC541ANS
IC234	8-759-926-77	s	IC SN74HC541ANS
IC235	8-759-939-92	s	IC SN74ALS541NS
IC236	8-759-939-92	s	IC SN74ALS541NS
IC239	8-759-515-12	s	IC SN74ALS574BNS
IC300	8-759-934-41	s	IC SN74ALS240ANS
IC301	8-759-934-41	s	IC SN74ALS240ANS
IC302	8-759-934-41	s	IC SN74ALS240ANS
IC303	8-759-934-41	s	IC SN74ALS240ANS
IC304	8-759-934-41	s	IC SN74ALS240ANS
IC305	8-759-934-41	s	IC SN74ALS240ANS
IC306	8-759-515-09	■	IC SN74ALS374ANS
IC307	8-759-515-09	s	IC SN74ALS374ANS
IC308	8-759-294-69	s	IC CXD8879Q
IC309	8-759-294-69	s	IC CXD8879Q
IC310	8-759-925-74	s	IC TC74HC04ANS
IC311	8-759-926-24	s	IC SN74HC164ANS
IC312	8-759-925-90	s	IC SN74HC74ANS
IC313	8-759-925-90	s	IC SN74HC74ANS
IC314	8-759-926-24	s	IC SN74HC164ANS
IC315	8-759-081-42	s	IC TC74VHC00F
IC316	8-759-049-11	s	IC SN74ALS157ANS
IC317	8-759-049-11	s	IC SN74ALS157ANS
IC318	8-759-049-11	s	IC SN74ALS157ANS
IC319	8-759-049-11	s	IC SN74ALS157ANS
IC320	8-759-049-11	s	IC SN74ALS157ANS
IC321	8-759-049-11	s	IC SN74ALS157ANS
IC322	8-759-049-11	s	IC SN74ALS157ANS
IC323	8-759-049-11	s	IC SN74ALS157ANS
IC324	8-759-934-29	s	IC SN74ALS153NS
IC325	8-759-934-29	s	IC SN74ALS153NS
IC326	8-759-934-29	s	IC SN74ALS153NS
IC327	8-759-934-29	s	IC SN74ALS153NS
IC328	8-759-934-29	s	IC SN74ALS153NS
IC329	8-759-934-29	s	IC SN74ALS153NS
IC330	8-759-934-29	s	IC SN74ALS153NS
IC331	8-759-934-29	s	IC SN74ALS153NS
IC332	8-759-934-29	■	IC SN74ALS153NS
IC333	8-759-934-29	s	IC SN74ALS153NS
IC334	8-759-934-29	s	IC SN74ALS153NS
IC335	8-759-934-29	s	IC SN74ALS153NS
IC336	8-759-934-29	s	IC SN74ALS153NS
IC337	8-759-934-29	s	IC SN74ALS153NS
IC338	8-759-934-29	s	IC SN74ALS153NS
IC339	8-759-934-29	■	IC SN74ALS153NS
IC340	8-759-926-67	s	IC SN74HC374ANS
IC341	8-759-926-67	s	IC SN74HC374ANS
IC342	8-759-186-47	s	IC TC74VHC138F
IC343	8-759-186-49	s	IC TC74VHC139F
IC344	8-759-926-67	s	IC SN74HC374ANS
IC345	8-759-926-67	s	IC SN74HC374ANS
IC346	8-759-186-47	s	IC TC74VHC138F
IC347	8-759-186-47	s	IC TC74VHC138F
IC348	8-759-186-49	s	IC TC74VHC139F

(FM-44/44A BOARD(ESBK-7023(UC/J/CE)))

Ref. No. or Q'ty	Part No.	SP	Description
IC349	8-759-186-47	s	IC TC74VHC138F
IC350	8-759-926-67	s	IC SN74HC374ANS
IC351	8-759-926-67	■	IC SN74HC374ANS
IC352	8-759-926-67	■	IC SN74HC374ANS
IC353	8-759-926-69	s	IC SN74HC377ANS
IC354	8-759-926-69	s	IC SN74HC377ANS
IC355	8-759-186-49	■	IC TC74VHC139F
IC356	8-759-925-72	s	IC SN74HC02ANS
IC401	8-759-294-69	s	IC CXD8879Q
IC402	8-759-294-69	s	IC CXD8879Q
IC403	8-759-925-74	s	IC TC74HC04ANS
IC404	8-759-179-94	s	IC HM530281-20
IC405	8-759-179-94	s	IC HM530281-20
IC406	8-759-179-94	s	IC HM530281-20
IC407	8-759-179-94	■	IC HM530281-20
IC408	8-759-179-94	s	IC HM530281-20
IC409	8-759-179-94	s	IC HM530281-20
IC410	8-759-179-94	s	IC HM530281-20
IC411	8-759-179-94	s	IC HM530281-20
IC412	8-759-926-18	s	IC SN74HC157ANS
IC413	8-759-926-17	s	IC SN74HC153ANS
IC414	8-759-983-24	s	IC CXD8033Q
IC415	8-759-926-69	s	IC SN74HC377ANS
IC416	8-759-063-42	s	IC CXD8264Q
IC417	8-759-425-33	■	IC 27H010-ES7A-FM417V1.00
IC418	8-759-425-34	o	IC 27H010-ES7A-FM418V1.00
IC419	8-759-385-57	s	IC CXD8560Q
IC420	8-759-926-67	s	IC SN74HC374ANS
IC421	8-759-385-57	s	IC CXD8560Q
IC422	8-759-926-69	s	IC SN74HC377ANS
IC423	8-759-925-85	■	IC SN74HC32ANS
IC424	8-759-926-17	■	IC SN74HC153ANS
IC425	8-759-926-17	s	IC SN74HC153ANS
IC426	8-759-926-17	s	IC SN74HC153ANS
IC427	8-759-926-17	s	IC SN74HC153ANS
IC428	8-759-926-17	s	IC SN74HC153ANS
IC429	8-759-926-17	s	IC SN74HC153ANS
IC430	8-759-926-17	s	IC SN74HC153ANS
IC431	8-759-926-17	s	IC SN74HC153ANS
IC432	8-759-926-17	■	IC SN74HC153ANS
IC433	8-759-926-17	s	IC SN74HC153ANS
IC434	8-759-926-17	s	IC SN74HC153ANS
IC435	8-759-926-17	s	IC SN74HC153ANS
IC436	8-759-926-17	s	IC SN74HC153ANS
IC437	8-759-926-17	s	IC SN74HC153ANS
IC438	8-759-926-17	■	IC SN74HC153ANS
IC439	8-759-926-17	s	IC SN74HC153ANS
IC501	8-759-333-58	■	IC CXD8926Q
IC502	8-759-147-05	s	IC UPD42101G-3
IC503	8-759-179-94	s	IC HM530281-20
IC504	8-759-292-78	s	IC CXD8890Q
IC505	8-759-292-78	s	IC CXD8890Q
IC506	8-759-292-78	s	IC CXD8890Q
IC507	8-759-385-55	s	IC CXD8558Q
IC508	8-759-385-57	s	IC CXD8560Q
IC509	8-759-926-69	■	IC SN74HC377ANS
IC510	8-759-425-35	o	IC 27H010-ES7A-FM510V1.00
IC511	8-759-294-68	■	IC CXD8925Q
IC512	8-759-926-69	s	IC SN74HC377ANS

(FM-44/44A BOARD(ESBK-7023(UC/J/CE)))

Ref. No. or Q'ty	Part No.	SP	Description
IC513	8-759-425-35	o	IC 27H010-ES7A-FM510V1.00
IC514	8-759-294-68	s	IC CXD8925Q
IC515	8-759-179-94	s	IC HM530281-20
IC516	8-759-179-94	s	IC HM530281-20
IC517	8-759-515-09	s	IC SN74ALS374ANS
IC518	8-759-515-09	s	IC SN74ALS374ANS
IC519	8-759-359-54	s	IC SN74ALS244CNS-E20
IC520	8-759-359-54	s	IC SN74ALS244CNS-E20
L1	1-412-525-31	s	INDUCTOR 10uH
L2	1-412-525-31	s	INDUCTOR 10uH
L300	1-500-202-11	s	BEAD, FERRITE
L301	1-500-202-11	s	BEAD, FERRITE
L502	1-500-202-11	s	BEAD, FERRITE
L507	1-500-202-11	s	BEAD, FERRITE
L511	1-500-202-11	s	BEAD, FERRITE
L517	1-500-202-11	s	BEAD, FERRITE
L518	1-500-202-11	s	BEAD, FERRITE
L519	1-500-202-11	s	BEAD, FERRITE
L520	1-500-202-11	s	BEAD, FERRITE
PS1	⚠ 1-532-686-21	■	LINK, IC 2.7A
R101-105	1-208-806-11	■	METAL, CHIP 10k 0.5% 1/10W
R106	1-216-619-11	s	METAL, CHIP 47 0.5% 1/10W
R201	1-216-699-11	s	METAL, CHIP 100k 0.5% 1/10W
R301	1-216-663-11	s	METAL, CHIP 3.3k 0.5% 1/10W
R302	1-216-611-11	s	METAL, CHIP 22 0.5% 1/10W
RB101	1-239-309-11	s	RESISTOR BLOCK, CHIP 100kx8
RB102	1-239-309-11	■	RESISTOR BLOCK, CHIP 100kx8
RB103	1-239-309-11	■	RESISTOR BLOCK, CHIP 100kx8
RB301	1-239-421-11	s	RESISTOR BLOCK, CHIP 680x4
RB302	1-239-422-11	s	RESISTOR BLOCK, CHIP 820x4
RB303	1-239-421-11	s	RESISTOR BLOCK, CHIP 680x4
RB304	1-239-422-11	s	RESISTOR BLOCK, CHIP 820x4
RB305	1-239-421-11	s	RESISTOR BLOCK, CHIP 680x4
RB306	1-239-422-11	■	RESISTOR BLOCK, CHIP 820x4
RB307	1-239-421-11	s	RESISTOR BLOCK, CHIP 680x4
RB308	1-239-422-11	s	RESISTOR BLOCK, CHIP 820x4
RB309	1-239-621-11	s	RESISTOR BLOCK, CHIP 22x4
RB310	1-239-621-11	s	RESISTOR BLOCK, CHIP 22x4
RB311	1-239-621-11	■	RESISTOR BLOCK, CHIP 22x4
RB312	1-239-428-11	■	RESISTOR BLOCK, CHIP 3.3kx4
RB313	1-239-428-11	s	RESISTOR BLOCK, CHIP 3.3kx4
RB314	1-239-621-11	s	RESISTOR BLOCK, CHIP 22x4
RB315	1-239-621-11	s	RESISTOR BLOCK, CHIP 22x4
RB316	1-239-621-11	s	RESISTOR BLOCK, CHIP 22x4
RB317	1-239-621-11	s	RESISTOR BLOCK, CHIP 22x4
RB401	1-239-306-11	s	RESISTOR BLOCK, CHIP 10kx8
RB402	1-239-306-11	s	RESISTOR BLOCK, CHIP 10kx8
RB403	1-239-306-11	■	RESISTOR BLOCK, CHIP 10kx8
RB404	1-239-306-11	s	RESISTOR BLOCK, CHIP 10kx8
RB501	1-239-309-11	s	RESISTOR BLOCK, CHIP 100kx8
RB511-524	1-239-621-11	s	RESISTOR BLOCK, CHIP 22x4
TP1-16	1-535-877-22	o	CHIP, CHECKER
X101	1-767-134-11	s	OSCILLATOR, CRYSTAL 10.00MHz

FP-74 BOARD(ES-7(UC/J/CE))

Ref. No. or Q'ty	Part No.	SP	Description

Refer to the service manual of the ES-7.

IO-119 BOARD(ESBK-7031(UC/J/CE))

Ref. No. or Q'ty	Part No.	SP	Description
This mounted circuit board is not supplied for repair part.			
2pcs	1-750-881-11	s	CONNECTOR CONVERSION, 2-BNC/COAXMIN
1pc	1-774-157-11	s	CONNECTOR CONVERSION, BNC/COAXMINI,
1pc	3-172-089-01	■	HANDLE
1pc	3-603-855-02	o	PLATE, IO CN
1pc	7-621-259-29	s	SCREW +P 2.6x4
1pc	7-682-547-04	■	SCREW +B 3x6
1pc	7-682-947-01	s	SCREW +PSW 3x6
1pc	7-682-948-01	s	SCREW +PSW 3x8
1pc	7-685-547-19	s	SCREW +BTP 3x10 TYPE2 N-S
1pc	7-685-862-09	s	SCREW +BVTT 2.6x6 (S)
8pcs	7-682-547-04	■	SCREW +B 3x6
8pcs	3-711-649-01	s	STUD
3pcs	3-189-544-03	o	IC HEAT SINK (B)
3pcs	3-189-543-03	o	IC HEAT SINK (A)
3pcs	7-621-770-87	■	SCREW +B 2.6x5
C101	1-163-038-91	s	CERAMIC, CHIP 0.1uF 25V
C102	1-163-038-91	s	CERAMIC, CHIP 0.1uF 25V
C103	1-124-261-00	s	ELECT 10uF 20% 50V
C104	1-163-038-91	s	CERAMIC, CHIP 0.1uF 25V
C105	1-163-038-91	s	CERAMIC, CHIP 0.1uF 25V
C106	1-163-237-11	s	CERAMIC, CHIP 27pF 5% 50V
C107	1-163-038-91	s	CERAMIC, CHIP 0.1uF 25V
C108	1-124-261-00	■	ELECT 10uF 20% 50V
C109	1-124-589-11	s	ELECT 47uF 20% 16V
C110	1-124-589-11	s	ELECT 47uF 20% 16V
C112	1-164-232-11	s	CERAMIC, CHIP 0.01uF 10% 100V
C113	1-164-232-11	■	CERAMIC, CHIP 0.01uF 10% 100V
C114	1-124-261-00	s	ELECT 10uF 20% 50V
C115	1-163-243-11	s	CERAMIC, CHIP 47pF 5% 50V
C116	1-163-038-91	s	CERAMIC, CHIP 0.1uF 25V
C117	1-163-038-91	s	CERAMIC, CHIP 0.1uF 25V
C120-125	1-163-038-91	s	CERAMIC, CHIP 0.1uF 25V
C126	1-124-261-00	s	ELECT 10uF 20% 50V
C127	1-163-038-91	s	CERAMIC, CHIP 0.1uF 25V
C128	1-163-038-91	s	CERAMIC, CHIP 0.1uF 25V
C129	1-163-038-91	s	CERAMIC, CHIP 0.1uF 25V
C130	1-163-038-91	s	CERAMIC, CHIP 0.1uF 25V
C131	1-124-261-00	s	ELECT 10uF 20% 50V
C132	1-163-038-91	s	CERAMIC, CHIP 0.1uF 25V
C133	1-126-163-11	s	ELECT 4.7uF 20% 50V
C134-141	1-163-038-91	■	CERAMIC, CHIP 0.1uF 25V
C142	1-126-163-11	■	ELECT 4.7uF 20% 50V
C143	1-163-038-91	s	CERAMIC, CHIP 0.1uF 25V
C144	1-163-038-91	s	CERAMIC, CHIP 0.1uF 25V
C145	1-163-038-91	s	CERAMIC, CHIP 0.1uF 25V
C147	1-163-038-91	s	CERAMIC, CHIP 0.1uF 25V
C148	1-163-038-91	■	CERAMIC, CHIP 0.1uF 25V
C149	1-163-038-91	s	CERAMIC, CHIP 0.1uF 25V
C150	1-126-162-11	s	ELECT 3.3uF 20% 50V
C151	1-163-038-91	s	CERAMIC, CHIP 0.1uF 25V
C152	1-126-160-11	s	ELECT 1uF 20% 50V
C154	1-163-038-91	■	CERAMIC, CHIP 0.1uF 25V
C155	1-163-038-91	s	CERAMIC, CHIP 0.1uF 25V
C201	1-163-038-91	s	CERAMIC, CHIP 0.1uF 25V
C202	1-163-038-91	s	CERAMIC, CHIP 0.1uF 25V
C203	1-124-261-00	s	ELECT 10uF 20% 50V
C204	1-163-038-91	s	CERAMIC, CHIP 0.1uF 25V
C205	1-163-038-91	■	CERAMIC, CHIP 0.1uF 25V

(IO-119 BOARD(ESBK-7031(UC/J/CE)))

Ref. No. or Q'ty	Part No.	SP	Description
C206	1-163-237-11	■	CERAMIC, CHIP 27pF 5% 50V
C207	1-163-038-91	s	CERAMIC, CHIP 0.1uF 25V
C208	1-124-261-00	s	ELECT 10uF 20% 50V
C209	1-124-589-11	s	ELECT 47uF 20% 16V
C210	1-124-589-11	s	ELECT 47uF 20% 16V
C211	1-163-038-91	s	CERAMIC, CHIP 0.1uF 25V
C212	1-164-232-11	s	CERAMIC, CHIP 0.01uF 10% 100V
C213	1-164-232-11	s	CERAMIC, CHIP 0.01uF 10% 100V
C214	1-124-261-00	s	ELECT 10uF 20% 50V
C215	1-163-243-11	s	CERAMIC, CHIP 47pF 5% 50V
C216	1-163-038-91	s	CERAMIC, CHIP 0.1uF 25V
C220-225	1-163-038-91	s	CERAMIC, CHIP 0.1uF 25V
C226	1-124-261-00	s	ELECT 10uF 20% 50V
C227	1-163-038-91	s	CERAMIC, CHIP 0.1uF 25V
C228	1-163-038-91	s	CERAMIC, CHIP 0.1uF 25V
C229	1-163-038-91	■	CERAMIC, CHIP 0.1uF 25V
C230	1-163-038-91	s	CERAMIC, CHIP 0.1uF 25V
C231	1-124-261-00	■	ELECT 10uF 20% 50V
C232	1-163-038-91	s	CERAMIC, CHIP 0.1uF 25V
C234	1-163-038-91	s	CERAMIC, CHIP 0.1uF 25V
C235	1-163-038-91	s	CERAMIC, CHIP 0.1uF 25V
C236	1-163-038-91	s	CERAMIC, CHIP 0.1uF 25V
C238	1-163-038-91	s	CERAMIC, CHIP 0.1uF 25V
C239	1-163-038-91	s	CERAMIC, CHIP 0.1uF 25V
C240	1-163-038-91	s	CERAMIC, CHIP 0.1uF 25V
C241	1-163-038-91	s	CERAMIC, CHIP 0.1uF 25V
C242	1-126-162-11	s	ELECT 3.3uF 20% 50V
C243	1-163-038-91	s	CERAMIC, CHIP 0.1uF 25V
C244	1-126-160-11	s	ELECT 1uF 20% 50V
C302-307	1-163-038-91	■	CERAMIC, CHIP 0.1uF 25V
C309	1-163-038-91	s	CERAMIC, CHIP 0.1uF 25V
C310	1-163-038-91	■	CERAMIC, CHIP 0.1uF 25V
C311	1-124-261-00	s	ELECT 10uF 20% 50V
C312	1-163-038-91	■	CERAMIC, CHIP 0.1uF 25V
C313	1-163-121-00	s	CERAMIC, CHIP 150pF ■ 50V
C314	1-163-038-91	s	CERAMIC, CHIP 0.1uF 25V
C315	1-163-038-91	s	CERAMIC, CHIP 0.1uF 25V
C316	1-124-261-00	s	ELECT 10uF 20% 50V
C317	1-163-038-91	s	CERAMIC, CHIP 0.1uF 25V
C318	1-124-261-00	■	ELECT 10uF 20% 50V
C319	1-163-038-91	s	CERAMIC, CHIP 0.1uF 25V
C320	1-163-038-91	s	CERAMIC, CHIP 0.1uF 25V
C321	1-163-038-91	s	CERAMIC, CHIP 0.1uF 25V
C322	1-163-038-91	s	CERAMIC, CHIP 0.1uF 25V
C323	1-124-261-00	s	ELECT 10uF 20% 50V
C324	1-124-261-00	s	ELECT 10uF 20% 50V
C325	1-163-038-91	s	CERAMIC, CHIP 0.1uF 25V
C326	1-124-261-00	s	ELECT 10uF 20% 50V
C327	1-163-038-91	s	CERAMIC, CHIP 0.1uF 25V
C328	1-124-261-00	s	ELECT 10uF 20% 50V
C329	1-163-038-91	s	CERAMIC, CHIP 0.1uF 25V
C330	1-124-261-00	■	ELECT 10uF 20% 50V
C331	1-163-038-91	■	CERAMIC, CHIP 0.1uF 25V
C332	1-163-038-91	s	CERAMIC, CHIP 0.1uF 25V
C336	1-163-038-91	s	CERAMIC, CHIP 0.1uF 25V
C337	1-163-038-91	■	CERAMIC, CHIP 0.1uF 25V
C338	1-126-163-11	s	ELECT 4.7uF 20% 50V
C339	1-126-162-11	s	ELECT 3.3uF 20% 50V
C340	1-163-038-91	s	CERAMIC, CHIP 0.1uF 25V

(IO-119 BOARD(ESBK-7031(UC/J/CE)))

Ref. No. or Q'ty	Part No.	SP	Description
C341	1-126-160-11	■	ELECT 1uF 20% 50V
C342	1-124-589-11	s	ELECT 47uF 20% 16V
C343	1-163-038-91	s	CERAMIC, CHIP 0.1uF 25V
C344	1-124-261-00	s	ELECT 10uF 20% 50V
C345	1-163-038-91	s	CERAMIC, CHIP 0.1uF 25V
C346	1-163-038-91	s	CERAMIC, CHIP 0.1uF 25V
C347	1-163-038-91	s	CERAMIC, CHIP 0.1uF 25V
C353	1-163-038-91	s	CERAMIC, CHIP 0.1uF 25V
C354	1-163-038-91	s	CERAMIC, CHIP 0.1uF 25V
C401-422	1-163-038-91	s	CERAMIC, CHIP 0.1uF 25V
C423	1-126-163-11	s	ELECT 4.7uF 20% 50V
C424	1-163-037-11	s	CERAMIC, CHIP 0.022uF 10% 25V
C425	1-163-037-11	■	CERAMIC, CHIP 0.022uF 10% 25V
C426	1-163-037-11	s	CERAMIC, CHIP 0.022uF 10% 25V
C427	1-126-163-11	s	ELECT 4.7uF 20% 50V
C428	1-126-163-11	s	ELECT 4.7uF 20% 50V
C429	1-126-160-11	s	ELECT 1uF 20% 50V
C430	1-163-038-91	s	CERAMIC, CHIP 0.1uF 25V
C431	1-126-162-11	s	ELECT 3.3uF 20% 50V
C432-443	1-163-038-91	s	CERAMIC, CHIP 0.1uF 25V
C451	1-163-038-91	■	CERAMIC, CHIP 0.1uF 25V
C454-459	1-163-038-91	s	CERAMIC, CHIP 0.1uF 25V
C501	1-163-038-91	■	CERAMIC, CHIP 0.1uF 25V
C502	1-163-038-91	s	CERAMIC, CHIP 0.1uF 25V
C503	1-163-038-91	s	CERAMIC, CHIP 0.1uF 25V
C504	1-163-038-91	s	CERAMIC, CHIP 0.1uF 25V
C505	1-163-037-11	s	CERAMIC, CHIP 0.022uF 10% 25V
C506	1-163-037-11	■	CERAMIC, CHIP 0.022uF 10% 25V
C507	1-163-038-91	■	CERAMIC, CHIP 0.1uF 25V
C508	1-163-038-91	s	CERAMIC, CHIP 0.1uF 25V
C509	1-163-038-91	s	CERAMIC, CHIP 0.1uF 25V
C510	1-163-038-91	s	CERAMIC, CHIP 0.1uF 25V
C511	1-163-227-11	s	CERAMIC, CHIP 10pF 5% 50V
C512	1-163-227-11	■	CERAMIC, CHIP 10pF 5% 50V
C513	1-163-037-11	s	CERAMIC, CHIP 0.022uF 10% 25V
C514	1-163-037-11	s	CERAMIC, CHIP 0.022uF 10% 25V
C515	1-163-037-11	■	CERAMIC, CHIP 0.022uF 10% 25V
C516	1-163-037-11	■	CERAMIC, CHIP 0.022uF 10% 25V
C517	1-124-589-11	■	ELECT 47uF 20% 16V
C518	1-163-121-00	s	CERAMIC, CHIP 150pF 5% 50V
C519	1-163-037-11	■	CERAMIC, CHIP 0.022uF 10% 25V
C520	1-163-037-11	■	CERAMIC, CHIP 0.022uF 10% 25V
C521	1-163-037-11	s	CERAMIC, CHIP 0.022uF 10% 25V
C522	1-163-037-11	s	CERAMIC, CHIP 0.022uF 10% 25V
C523	1-163-038-91	s	CERAMIC, CHIP 0.1uF 25V
C524	1-126-163-11	s	ELECT 4.7uF 20% 50V
C525-529	1-163-038-91	s	CERAMIC, CHIP 0.1uF 25V
C530	1-163-037-11	s	CERAMIC, CHIP 0.022uF 10% 25V
C531	1-163-037-11	s	CERAMIC, CHIP 0.022uF 10% 25V
C532	1-126-163-11	s	ELECT 4.7uF 20% 50V
C533	1-163-121-00	s	CERAMIC, CHIP 150pF 5% 50V
C534	1-163-121-00	s	CERAMIC, CHIP 150pF 5% 50V
C535	1-163-121-00	s	CERAMIC, CHIP 150pF 5% 50V
C536	1-163-121-00	■	CERAMIC, CHIP 150pF [illegible] 50V
C537	1-163-121-00	s	CERAMIC, CHIP 150pF 5% 50V
C601-620	1-163-038-91	s	CERAMIC, CHIP 0.1uF 25V
C622	1-163-038-91	■	CERAMIC, CHIP 0.1uF 25V
C623	1-163-038-91	■	CERAMIC, CHIP 0.1uF 25V
C624	1-163-038-91	s	CERAMIC, CHIP 0.1uF 25V

(IO-119 BOARD(ESBK-7031(UC/J/CE)))

Ref. No. or Q'ty	Part No.	SP	Description
C625	1-163-038-91	s	CERAMIC, CHIP 0.1uF 25V
C701	1-163-038-91	s	CERAMIC, CHIP 0.1uF 25V
C702	1-163-038-91	■	CERAMIC, CHIP 0.1uF 25V
C703	1-163-038-91	s	CERAMIC, CHIP 0.1uF 25V
C704	1-163-038-91	s	CERAMIC, CHIP 0.1uF 25V
C705	1-163-037-11	s	CERAMIC, CHIP 0.022uF 10% 25V
C706	1-163-037-11	s	CERAMIC, CHIP 0.022uF 10% 25V
C707	1-163-038-91	s	CERAMIC, CHIP 0.1uF 25V
C708	1-163-038-91	s	CERAMIC, CHIP 0.1uF 25V
C709	1-163-227-11	■	CERAMIC, CHIP 10pF [illegible] 50V
C710	1-163-227-11	s	CERAMIC, CHIP 10pF 5% 50V
C711	1-163-037-11	s	CERAMIC, CHIP 0.022uF 10% 25V
C712	1-163-037-11	s	CERAMIC, CHIP 0.022uF 10% 25V
C713	1-163-037-11	s	CERAMIC, CHIP 0.022uF 10% 25V
C714	1-163-037-11	s	CERAMIC, CHIP 0.022uF 10% 25V
C715	1-124-589-11	s	ELECT 47uF 20% 16V
C716	1-163-121-00	■	CERAMIC, CHIP 150pF 5% 50V
C717	1-163-038-91	■	CERAMIC, CHIP 0.1uF 25V
C718	1-163-038-91	■	CERAMIC, CHIP 0.1uF 25V
C719	1-163-037-11	s	CERAMIC, CHIP 0.022uF 10% 25V
C720	1-163-037-11	s	CERAMIC, CHIP 0.022uF 10% 25V
C721	1-163-037-11	s	CERAMIC, CHIP 0.022uF 10% 25V
C722	1-163-037-11	s	CERAMIC, CHIP 0.022uF 10% 25V
C723-727	1-163-038-91	s	CERAMIC, CHIP 0.1uF 25V
C728	1-163-121-00	s	CERAMIC, CHIP 150pF 5% 50V
C729	1-163-038-91	s	CERAMIC, CHIP 0.1uF 25V
C730	1-163-037-11	s	CERAMIC, CHIP 0.022uF 10% 25V
C731	1-163-037-11	s	CERAMIC, CHIP 0.022uF 10% 25V
C732	1-163-121-00	■	CERAMIC, CHIP 150pF 5% 50V
C733	1-163-121-00	■	CERAMIC, CHIP 150pF 5% 50V
C734	1-126-163-11	s	ELECT 4.7uF 20% 50V
C735	1-126-163-11	s	ELECT 4.7uF 20% 50V
C736	1-163-121-00	s	CERAMIC, CHIP 150pF 5% 50V
C737	1-163-121-00	s	CERAMIC, CHIP 150pF 5% 50V
C738	1-163-121-00	s	CERAMIC, CHIP 150pF 5% 50V
C739	1-163-038-91	■	CERAMIC, CHIP 0.1uF 25V
C740	1-163-038-91	s	CERAMIC, CHIP 0.1uF 25V
C802	1-163-037-11	■	CERAMIC, CHIP 0.022uF 10% 25V
C804	1-126-163-11	■	ELECT 4.7uF 20% 50V
C805	1-163-037-11	■	CERAMIC, CHIP 0.022uF 10% 25V
C806	1-126-163-11	s	ELECT 4.7uF 20% 50V
C807	1-163-038-91	■	CERAMIC, CHIP 0.1uF 25V
C808	1-163-038-91	s	CERAMIC, CHIP 0.1uF 25V
C809	1-163-038-91	s	CERAMIC, CHIP 0.1uF 25V
C810	1-163-037-11	s	CERAMIC, CHIP 0.022uF 10% 25V
C811	1-126-163-11	■	ELECT 4.7uF 20% 50V
C812	1-163-037-11	s	CERAMIC, CHIP 0.022uF 10% 25V
C813	1-126-163-11	s	ELECT 4.7uF 20% 50V
C815	1-126-163-11	s	ELECT 4.7uF 20% 50V
C816	1-163-243-11	s	CERAMIC, CHIP 47pF 5% 50V
C817	1-126-163-11	s	ELECT 4.7uF 20% 50V
C818	1-163-038-91	■	CERAMIC, CHIP 0.1uF 25V
C819	1-163-275-11	s	CERAMIC, CHIP 0.001uF 5% 50V
C820	1-124-589-11	s	ELECT 47uF 20% 16V
C901	1-126-163-11	s	ELECT 4.7uF 20% 50V
C902	1-163-038-91	s	CERAMIC, CHIP 0.1uF 25V
C903	1-163-038-91	s	CERAMIC, CHIP 0.1uF 25V
C904	1-163-038-91	■	CERAMIC, CHIP 0.1uF 25V
C905	1-126-163-11	s	ELECT 4.7uF 20% 50V

(IO-119 BOARD(ESBK-7031(UC/J/CE)))

Ref. No. or Q'ty	Part No.	SP	Description
C906	1-163-038-91	■	CERAMIC, CHIP 0.1uF 25V
C907	1-163-038-91	s	CERAMIC, CHIP 0.1uF 25V
C917	1-163-038-91	s	CERAMIC, CHIP 0.1uF 25V
C918	1-126-163-11	s	ELECT 4.7uF 20% 50V
C919	1-163-038-91	s	CERAMIC, CHIP 0.1uF 25V
C1001	1-163-037-11	s	CERAMIC, CHIP 0.022uF 10% 25V
C1002	1-163-243-11	■	CERAMIC, CHIP 47pF 5% 50V
C1003	1-124-242-00	s	ELECT 33uF 20% 25V
C1004	1-163-243-11	s	CERAMIC, CHIP 47pF 5% 50V
C1005	1-130-499-00	■	MYLAR 0.22uF 5% 50V
C1006	1-124-242-00	s	ELECT 33uF 20% 25V
C1007	1-163-038-91	s	CERAMIC, CHIP 0.1uF 25V
C1008	1-163-038-91	■	CERAMIC, CHIP 0.1uF 25V
C1009	1-163-038-91	s	CERAMIC, CHIP 0.1uF 25V
C1010	1-163-235-11	s	CERAMIC, CHIP 22pF 5% 50V
C1011	1-163-038-91	s	CERAMIC, CHIP 0.1uF 25V
C1012	1-163-038-91	s	CERAMIC, CHIP 0.1uF 25V
C1014	1-163-038-91	■	CERAMIC, CHIP 0.1uF 25V
C1015	1-163-038-91	s	CERAMIC, CHIP 0.1uF 25V
C1016	1-163-038-91	s	CERAMIC, CHIP 0.1uF 25V
C1018	1-126-163-11	s	ELECT 4.7uF 20% 50V
C1019	1-163-037-11	s	CERAMIC, CHIP 0.022uF 10% 25V
C1020	1-163-038-91	s	CERAMIC, CHIP 0.1uF 25V
C1022	1-163-038-91	■	CERAMIC, CHIP 0.1uF 25V
C1023	1-163-038-91	s	CERAMIC, CHIP 0.1uF 25V
C1024	1-163-038-91	s	CERAMIC, CHIP 0.1uF 25V
C1025	1-163-038-91	s	CERAMIC, CHIP 0.1uF 25V
C1101	1-163-037-11	s	CERAMIC, CHIP 0.022uF 10% 25V
C1102	1-126-163-11	s	ELECT 4.7uF 20% 50V
C1103	1-126-933-11	s	ELECT 100uF 20% 16V
C1104	1-126-933-11	s	ELECT 100uF 20% 16V
C1105	1-163-038-91	s	CERAMIC, CHIP 0.1uF 25V
C1106	1-163-038-91	s	CERAMIC, CHIP 0.1uF 25V
C1107	1-163-038-91	s	CERAMIC, CHIP 0.1uF 25V
C1108	1-163-038-91	s	CERAMIC, CHIP 0.1uF 25V
C1109	1-126-933-11	s	ELECT 100uF 20% 16V
C1110	1-126-933-11	s	ELECT 100uF 20% 16V
C1114	1-163-037-11	s	CERAMIC, CHIP 0.022uF 10% 25V
C1115	1-163-037-11	s	CERAMIC, CHIP 0.022uF 10% 25V
C1116	1-163-037-11	s	CERAMIC, CHIP 0.022uF 10% 25V
C1117	1-163-037-11	■	CERAMIC, CHIP 0.022uF 10% 25V
C1118	1-126-163-11	s	ELECT 4.7uF 20% 50V
C1119	1-126-163-11	■	ELECT 4.7uF 20% 50V
C1120	1-126-163-11	s	ELECT 4.7uF 20% 50V
C1121	1-126-163-11	s	ELECT 4.7uF 20% 50V
C1201	1-163-038-91	s	CERAMIC, CHIP 0.1uF 25V
C1202	1-163-037-11	s	CERAMIC, CHIP 0.022uF 10% 25V
C1203	1-163-037-11	s	CERAMIC, CHIP 0.022uF 10% 25V
C1204	1-163-037-11	s	CERAMIC, CHIP 0.022uF 10% 25V
C1205	1-126-163-11	s	ELECT 4.7uF 20% 50V
C1206	1-126-163-11	s	ELECT 4.7uF 20% 50V
C1207	1-126-163-11	s	ELECT 4.7uF 20% 50V
C1208	1-163-037-11	s	CERAMIC, CHIP 0.022uF 10% 25V
C1209	1-163-037-11	s	CERAMIC, CHIP 0.022uF 10% 25V
C1210	1-163-037-11	s	CERAMIC, CHIP 0.022uF 10% 25V
C1211	1-126-163-11	s	ELECT 4.7uF 20% 50V
C1212	1-126-163-11	s	ELECT 4.7uF 20% 50V
C1213	1-126-163-11	s	ELECT 4.7uF 20% 50V

(IO-119 BOARD(ESBK-7031(UC/J/CE)))

Ref. No. or Q'ty	Part No.	SP	Description
CN1	1-778-942-11	s	CONNECTOR, DIN 96P, MALE
CN2	1-778-942-11	■	CONNECTOR, DIN 96P, MALE
CN11	1-778-677-11	s	JACK, PIN 1P
CN12	1-568-006-11	s	CONNECTOR, XLR 3P, FEMALE
CN18	1-764-273-11	s	CONNECTOR, BNC, FEMALE
CN19	1-764-273-11	s	CONNECTOR, BNC, FEMALE
CN20	1-764-273-11	■	CONNECTOR, BNC, FEMALE
CN401	1-778-261-11	o	CONNECTOR, BB 124P, MALE
CN402	1-778-261-11	o	CONNECTOR, BB 124P, MALE
CN403	1-778-261-11	o	CONNECTOR, BB 124P, MALE
CN701	1-564-004-11	o	CONNECTOR 5P, MALE
CNI119	1-251-272-11	■	SOCKET, IC 84P
CNI120	1-251-272-11	■	SOCKET, IC 84P
CNI304	1-251-272-11	s	SOCKET, IC 84P
CNI501	1-540-151-21	s	SOCKET, IC 32P
CNI502	1-540-151-21	■	SOCKET, IC 32P
CNI503	1-540-151-21	s	SOCKET, IC 32P
CNI504	1-540-151-21	s	SOCKET, IC 32P
CNI522	1-526-660-21	■	SOCKET, IC 32P
CNI701	1-540-151-21	s	SOCKET, IC 32P
CNI702	1-540-151-21	s	SOCKET, IC 32P
CNI703	1-540-151-21	■	SOCKET, IC 32P
CNI704	1-540-151-21	■	SOCKET, IC 32P
CNI723	1-526-660-21	o	SOCKET, IC 32P
D102	8-719-404-35	s	DIODE MA141WK
D103	8-719-987-43	s	LED CL-150PG-CD, GRN
D202	8-719-404-35	s	DIODE MA141WK
D203	8-719-987-43	s	LED CL-150PG-CD, GRN
D302	8-719-404-35	■	DIODE MA141WK
D303	8-719-404-35	s	DIODE MA141WK
D501	8-719-987-43	■	LED CL-150PG-CD, GRN
D502	8-719-987-43	■	LED CL-150PG-CD, GRN
D503	8-719-987-43	s	LED CL-150PG-CD, GRN
D504	8-719-987-43	s	LED CL-150PG-CD, GRN
D505	8-719-989-22	s	LED CL-150R-CD, RED
D506	8-719-987-43	■	LED CL-150PG-CD, GRN
D507	8-719-989-22	s	LED CL-150R-CD, RED
D508	8-719-987-43	s	LED CL-150PG-CD, GRN
D701	8-719-989-22	■	LED CL-150R-CD, RED
D702	8-719-987-43	s	LED CL-150PG-CD, GRN
D703	8-719-989-22	■	LED CL-150R-CD, RED
D704	8-719-987-43	s	LED CL-150PG-CD, GRN
D705	8-719-987-43	■	LED CL-150PG-CD, GRN
D706	8-719-987-43	s	LED CL-150PG-CD, GRN
D707	8-719-987-43	s	LED CL-150PG-CD, GRN
D1001	8-719-801-78	■	DIODE 1SS184
D1002	8-719-104-34	s	DIODE 1S2835
D1003	8-719-801-78	s	DIODE 1SS184
D1004	8-719-104-34	s	DIODE 1S2835
D1101	8-719-987-43	s	LED CL-150PG-CD, GRN
D1102	8-719-989-22	s	LED CL-150R-CD, RED
F1101 ⚠	1-576-031-11	■	FUSE 10A 125V
F1102 ⚠	1-576-031-11	s	FUSE 10A 125V
FB101	1-543-309-21	s	BEAD, FERRITE
FB102	1-543-309-21	s	BEAD, FERRITE
FB103	1-543-309-21	s	BEAD, FERRITE
FB201	1-543-309-21	s	BEAD, FERRITE

(IO-119 BOARD(ESBK-7031(UC/J/CE)))

Ref. No. or Q'ty	Part No.	SP	Description
FB202	1-543-309-21	s	BEAD, FERRITE
FB203	1-543-309-21	s	BEAD, FERRITE
FB1101-1112	1-500-202-11	s	BEAD, FERRITE
FL401	1-233-314-11	s	FILTER, NOISE CHIP
FL402	1-233-314-11	s	FILTER, NOISE CHIP
FL403	1-233-314-11	s	FILTER, NOISE CHIP
FL801	1-239-626-11	s	EMIFIL ARRAY, CHIP
FL802	1-239-626-11	s	EMIFIL ARRAY, CHIP
FL803-808	1-233-314-11	s	FILTER, NOISE CHIP
FL901	1-233-314-11	s	FILTER, NOISE CHIP
FL902	1-233-314-11	s	FILTER, NOISE CHIP
FL903	1-233-314-11	s	FILTER, NOISE CHIP
FL1001	1-233-314-11	■	FILTER, NOISE CHIP
FL1101	1-239-642-21	s	EMIFIL ARRAY, CHIP
FL1102-1106	1-233-314-11	s	FILTER, NOISE CHIP
FL1201	1-239-642-21	s	EMIFIL ARRAY, CHIP
FL1202	1-239-642-21	■	EMIFIL ARRAY, CHIP
FL1203	1-239-642-21	s	EMIFIL ARRAY, CHIP
FL1204	1-233-314-11	s	FILTER, NOISE CHIP
FL1205	1-239-642-21	s	EMIFIL ARRAY, CHIP
FL1206	1-239-642-21	s	EMIFIL ARRAY, CHIP
FL1207-1211	1-233-314-11	s	FILTER, NOISE CHIP
IC101	8-741-602-11	s	IC SBX1602A
IC103	8-759-436-92	s	IC MC10125P
IC104	8-759-436-92	s	IC MC10125P
IC105	8-759-436-92	s	IC MC10125P
IC107	8-759-440-94	s	IC SN74LVT245ANS-E05
IC108	8-759-369-93	s	IC CXD8969AR
IC109	8-759-347-83	s	IC TK11233AUTB
IC110	8-759-939-92	s	IC SN74ALS541NS
IC111	8-759-939-92	s	IC SN74ALS541NS
IC112	8-759-939-92	s	IC SN74ALS541NS
IC113	8-759-939-92	s	IC SN74ALS541NS
IC114	8-759-939-92	s	IC SN74ALS541NS
IC115	8-759-277-19	■	IC UPD485505G-35
IC116	8-759-277-19	s	IC UPD485505G-35
IC201	8-741-602-11	■	IC SBX1602A
IC203	8-759-436-92	s	IC MC10125P
IC204	8-759-436-92	s	IC MC10125P
IC205	8-759-436-92	s	IC MC10125P
IC207	8-759-440-94	s	IC SN74LVT245ANS-E05
IC208	8-759-369-93	s	IC CXD8969AR
IC209	8-759-347-83	s	IC TK11233AUTB
IC210	8-759-939-92	s	IC SN74ALS541NS
IC211	8-759-939-92	s	IC SN74ALS541NS
IC212	8-759-939-92	s	IC SN74ALS541NS
IC213	8-759-939-92	s	IC SN74ALS541NS
IC301	8-759-277-19	s	IC UPD485505G-35
IC302	8-759-277-19	s	IC UPD485505G-35
IC308	8-759-440-94	s	IC SN74LVT245ANS-E05
IC309	8-759-369-93	s	IC CXD8969AR
IC310	8-759-347-83	s	IC TK11233AUTB
IC311	8-759-939-92	s	IC SN74ALS541NS

(IO-119 BOARD(ESBK-7031(UC/J/CE)))

Ref. No. or Q'ty	Part No.	SP	Description
IC312	8-759-939-92	s	IC SN74ALS541NS
IC313	8-741-601-11	s	IC SBX1601A
IC314	8-752-050-69	s	IC CXA1389AQ
IC316	8-752-202-90	s	IC CX22029
IC317	8-759-436-88	s	IC MC10124P
IC318	8-759-436-92	s	IC MC10125P
IC321	8-759-939-92	s	IC SN74ALS541NS
IC401	8-759-990-68	s	IC 74F574SJ
IC402	8-759-990-68	s	IC 74F574SJ
IC403	8-759-990-68	s	IC 74F574SJ
IC404	8-759-989-03	s	IC 74F32SJ
IC405	8-759-989-03	s	IC 74F32SJ
IC406	8-759-990-68	s	IC 74F574SJ
IC407	8-759-990-68	■	IC 74F574SJ
IC408	8-759-946-65	s	IC SN74ALS04BNS
IC409	8-759-933-98	s	IC SN74ALS08NS
IC410	8-759-990-68	s	IC 74F574SJ
IC411	8-759-939-92	s	IC SN74ALS541NS
IC412	8-759-939-92	■	IC SN74ALS541NS
IC413	8-759-939-92	s	IC SN74ALS541NS
IC414	8-759-939-92	s	IC SN74ALS541NS
IC415	8-759-939-92	s	IC SN74ALS541NS
IC416	8-759-939-92	s	IC SN74ALS541NS
IC417	8-759-939-92	s	IC SN74ALS541NS
IC418	8-759-939-92	s	IC SN74ALS541NS
IC419	8-759-947-45	■	IC SN74ALS245ANS
IC420	8-759-947-45	■	IC SN74ALS245ANS
IC421	8-759-947-45	s	IC SN74ALS245ANS
IC422	8-759-947-45	■	IC SN74ALS245ANS
IC426	8-759-347-01	■	IC TK11230AMTL
IC427	8-759-515-12	s	IC SN74ALS574BNS
IC428	8-759-515-12	s	IC SN74ALS574BNS
IC429	8-759-503-05	s	IC SN74LS541NS
IC430	8-759-503-05	s	IC SN74LS541NS
IC431	8-759-503-05	■	IC SN74LS541NS
IC432	8-759-503-05	s	IC SN74LS541NS
IC433	8-759-939-92	s	IC SN74ALS541NS
IC434	8-759-939-92	s	IC SN74ALS541NS
IC505	8-759-363-94	s	IC CY7C199-15VC
IC506	8-759-363-94	s	IC CY7C199-15VC
IC507	8-759-186-63	s	IC TC74VHC245F
IC508	8-759-186-63	s	IC TC74VHC245F
IC509	8-759-347-38	s	IC SN74ALS138ANS
IC510	8-759-930-35	s	IC SN74LS125ANS
IC511	8-759-934-11	s	IC SN74ALS32NS
IC512	8-759-296-67	s	IC HD6417032F20
IC513	8-759-515-12	s	IC SN74ALS574BNS
IC514	8-759-363-94	s	IC CY7C199-15VC
IC515	8-759-363-94	s	IC CY7C199-15VC
IC516	8-759-363-94	s	IC CY7C199-15VC
IC517	8-759-363-94	s	IC CY7C199-15VC
IC518	8-759-947-45	s	IC SN74ALS245ANS
IC519	8-759-947-45	s	IC SN74ALS245ANS
IC520	8-759-939-92	■	IC SN74ALS541NS
IC521	8-759-939-92	■	IC SN74ALS541NS
IC523	8-759-363-94	s	IC CY7C199-15VC
IC524	8-759-363-94	■	IC CY7C199-15VC
IC525	8-759-930-35	s	IC SN74LS125ANS
IC601	8-759-939-92	s	IC SN74ALS541NS

(IO-119 BOARD(ESBK-7031(UC/J/CE)))

Ref. No. or Q'ty	Part No.	SP	Description
IC602	8-759-939-92	■	IC SN74ALS541NS
IC603	8-759-939-92	s	IC SN74ALS541NS
IC604	8-759-939-92	s	IC SN74ALS541NS
IC605	8-759-939-92	■	IC SN74ALS541NS
IC606	8-759-939-92	s	IC SN74ALS541NS
IC607	8-759-946-65	s	IC SN74ALS04BNS
IC608	8-759-298-23	s	IC SN74ALS161BNS-E20
IC609	8-759-298-23	s	IC SN74ALS161BNS-E20
IC610	8-759-298-23	s	IC SN74ALS161BNS-E20
IC611	8-759-298-23	s	IC SN74ALS161BNS-E20
IC612	8-759-939-92	s	IC SN74ALS541NS
IC613	8-759-939-92	s	IC SN74ALS541NS
IC614	8-759-939-92	s	IC SN74ALS541NS
IC615	8-759-939-92	s	IC SN74ALS541NS
IC616	8-759-939-92	s	IC SN74ALS541NS
IC617	8-759-939-92	s	IC SN74ALS541NS
IC618	8-759-989-03	s	IC 74F32SJ
IC619	8-759-174-16	s	IC TC74VHC244F
IC620	8-759-174-16	s	IC TC74VHC244F
IC621	8-759-359-54	s	IC SN74ALS244CNS-E20
IC623	8-759-174-16	s	IC TC74VHC244F
IC624	8-759-174-16	s	IC TC74VHC244F
IC625	8-759-359-54	■	IC SN74ALS244CNS-E20
IC705	8-759-363-94	s	IC CY7C199-15VC
IC706	8-759-363-94	s	IC CY7C199-15VC
IC707	8-759-930-35	s	IC SN74LS125ANS
IC708	8-759-186-63	s	IC TC74VHC245F
IC709	8-759-186-63	s	IC TC74VHC245F
IC710	8-759-947-45	s	IC SN74ALS245ANS
IC711	8-759-933-98	s	IC SN74ALS08NS
IC712	8-759-296-67	s	IC HD6417032F20
IC713	8-759-939-92	s	IC SN74ALS541NS
IC714	8-759-515-12	■	IC SN74ALS574BNS
IC715	8-759-363-94	■	IC CY7C199-15VC
IC716	8-759-363-94	s	IC CY7C199-15VC
IC717	8-759-363-94	s	IC CY7C199-15VC
IC718	8-759-363-94	s	IC CY7C199-15VC
IC719	8-759-947-45	s	IC SN74ALS245ANS
IC720	8-759-947-45	s	IC SN74ALS245ANS
IC721	8-759-939-92	s	IC SN74ALS541NS
IC722	8-759-939-92	s	IC SN74ALS541NS
IC724	8-759-363-94	s	IC CY7C199-15VC
IC725	8-759-363-94	s	IC CY7C199-15VC
IC726	8-759-939-92	s	IC SN74ALS541NS
IC802	8-759-515-12	s	IC SN74ALS574BNS
IC803	8-759-049-12	s	IC SN74ALS540NS
IC804	8-759-049-12	s	IC SN74ALS540NS
IC805	8-759-049-12	s	IC SN74ALS540NS
IC806	8-759-295-09	s	IC TLC2932IPW
IC807	8-759-973-85	s	IC SN74ALS74ANS
IC808	8-759-939-92	s	IC SN74ALS541NS
IC901	8-759-939-92	■	IC SN74ALS541NS
IC902	8-759-347-38	s	IC SN74ALS138ANS
IC903	8-759-347-38	s	IC SN74ALS138ANS
IC904	8-759-929-73	s	IC SN74LS00NS
IC905	8-759-947-45	s	IC SN74ALS245ANS
IC906	8-759-335-04	s	IC CY7C136-55JC
IC907	8-759-186-47	s	IC TC74VHC138F
IC1001	8-759-927-29	s	IC SN74HCU04NS

(IO-119 BOARD(ESBK-7031(UC/J/CE)))

Ref. No. or Q'ty	Part No.	SP	Description
IC1002	8-759-923-64	■	IC AM26LS32ACNS
IC1003	8-759-926-05	s	IC SN74HC125ANS
IC1005	8-759-069-38	■	IC CXD8278AQ
IC1006	8-759-925-82	s	IC SN74HC21ANS
IC1007	8-759-926-48	s	IC SN74HC244NS
IC1008	8-759-252-89	s	IC AD1890JP
IC1009	8-759-930-35	s	IC SN74LS125ANS
IC1010	8-759-926-48	■	IC SN74HC244NS
IC1011	8-759-925-90	s	IC SN74HC74ANS
IC1012	8-759-925-85	s	IC SN74HC32ANS
IC1013	8-759-268-29	s	IC SN74HC595ANS
IC1014	8-759-268-29	s	IC SN74HC595ANS
IC1015	8-759-926-12	s	IC SN74HC139ANS
IC1101	8-759-939-92	■	IC SN74ALS541NS
IC1102	8-759-515-12	s	IC SN74ALS574BNS
IC1103	8-759-515-12	s	IC SN74ALS574BNS
IC1104	8-759-049-12	s	IC SN74ALS540NS
IC1105	8-759-515-12	s	IC SN74ALS574BNS
IC1201	8-759-930-35	s	IC SN74LS125ANS
IC1202	8-759-515-12	s	IC SN74ALS574BNS
IC1203	8-759-515-12	s	IC SN74ALS574BNS
IC1204	8-759-515-12	■	IC SN74ALS574BNS
IC1205	8-759-515-12	s	IC SN74ALS574BNS
IC1206	8-759-515-12	s	IC SN74ALS574BNS
IC1207	8-759-515-12	s	IC SN74ALS574BNS
L101	1-410-803-11	s	INDUCTOR CHIP 47NH
L102	1-410-803-11	s	INDUCTOR CHIP 47NH
L103	1-410-369-11	s	INDUCTOR CHIP 1uH
L105	1-410-803-11	■	INDUCTOR CHIP 47NH
L106	1-410-803-11	■	INDUCTOR CHIP 47NH
L201	1-410-803-11	s	INDUCTOR CHIP 47NH
L202	1-410-803-11	■	INDUCTOR CHIP 47NH
L203	1-410-369-11	■	INDUCTOR CHIP 1uH
L205	1-410-803-11	■	INDUCTOR CHIP 47NH
L206	1-410-803-11	■	INDUCTOR CHIP 47NH
L301	1-410-803-11	s	INDUCTOR CHIP 47NH
L302	1-410-803-11	s	INDUCTOR CHIP 47NH
L303	1-410-733-11	■	INDUCTOR CHIP 0.22uH
L305-314	1-410-803-11	s	INDUCTOR CHIP 47NH
L1001	1-410-803-11	s	INDUCTOR CHIP 47NH
Q102	8-729-907-00	s	TRANSISTOR DTC114EU
Q103	8-729-028-91	■	TRANSISTOR DTA144EUA-T106
Q104	8-729-105-68	s	TRANSISTOR 2SC3356-K
Q105	8-729-117-32	■	TRANSISTOR 2SC4177
Q202	8-729-907-00	■	TRANSISTOR DTC114EU
Q203	8-729-028-91	s	TRANSISTOR DTA144EUA-T106
Q204	8-729-105-68	s	TRANSISTOR 2SC3356-K
Q205	8-729-117-32	s	TRANSISTOR 2SC4177
Q301	8-729-117-32	s	TRANSISTOR 2SC4177
Q302	8-729-907-00	s	TRANSISTOR DTC114EU
Q303	8-729-028-91	s	TRANSISTOR DTA144EUA-T106
R105	1-216-295-91	s	RES, CHIP 0
R106	1-216-049-91	s	METAL, CHIP 1k 5% 1/10W
R107	1-216-623-11	s	METAL, CHIP 68 0.5% 1/10W
R108	1-216-073-00	s	METAL, CHIP 10k 5% 1/10W
R109	1-216-073-00	s	METAL, CHIP 10k 5% 1/10W
R110	1-216-635-11	■	METAL, CHIP 220 0.5% 1/10W
R111	1-216-049-91	s	METAL, CHIP 1k 5% 1/10W

(IO-119 BOARD(ESBK-7031(UC/J/CE)))

Ref. No. or Q'ty	Part No.	SP	Description
R112	1-216-611-11	■	METAL, CHIP 22 0.5% 1/10W
R113	1-216-624-11	s	METAL, CHIP 75 0.5% 1/10W
R114	1-216-647-11	s	METAL, CHIP 680 0.5% 1/10W
R115	1-216-649-11	■	METAL, CHIP 820 0.5% 1/10W
R116	1-216-049-91	s	METAL, CHIP 1k 5% 1/10W
R118	1-216-631-11	s	METAL, CHIP 150 0.5% 1/10W
R120	1-216-049-91	s	METAL, CHIP 1k ■ 1/10W
R121	1-216-295-91	s	RES, CHIP 0
R122	1-216-619-11	s	METAL, CHIP 47 0.5% 1/10W
R124	1-216-025-91	s	METAL, CHIP 100 5% 1/10W
R125-130	1-216-049-91	■	METAL, CHIP 1k 5% 1/10W
R131	1-216-033-00	s	METAL, CHIP 220 5% 1/10W
R132	1-216-049-91	s	METAL, CHIP 1k 5% 1/10W
R133	1-216-049-91	s	METAL, CHIP 1k 5% 1/10W
R134	1-216-049-91	s	METAL, CHIP 1k 5% 1/10W
R136	1-216-049-91	■	METAL, CHIP 1k ■ 1/10W
R137	1-216-049-91	s	METAL, CHIP 1k 5% 1/10W
R139	1-216-049-91	s	METAL, CHIP 1k 5% 1/10W
R141-151	1-216-033-00	s	METAL, CHIP 220 5% 1/10W
R152	1-216-295-91	s	RES, CHIP 0
R154	1-216-041-00	s	METAL, CHIP 470 5% 1/10W
R155-182	1-216-295-91	■	RES, CHIP 0
R184	1-216-295-91	s	RES, CHIP 0
R186	1-216-295-91	s	RES, CHIP 0
R188	1-216-295-91	s	RES, CHIP 0
R189	1-216-295-91	s	RES, CHIP 0
R194-200	1-216-295-91	■	RES, CHIP 0
R205	1-216-295-91	s	RES, CHIP 0
R206	1-216-049-91	s	METAL, CHIP 1k 5% 1/10W
R207	1-216-623-11	■	METAL, CHIP 68 0.5% 1/10W
R208	1-216-073-00	■	METAL, CHIP 10k 5% 1/10W
R209	1-216-073-00	s	METAL, CHIP 10k 5% 1/10W
R210	1-216-635-11	■	METAL, CHIP 220 0.5% 1/10W
R211	1-216-049-91	■	METAL, CHIP 1k 5% 1/10W
R212	1-216-611-11	s	METAL, CHIP 22 0.5% 1/10W
R213	1-216-624-11	s	METAL, CHIP 75 0.5% 1/10W
R214	1-216-049-91	s	METAL, CHIP 1k 5% 1/10W
R215	1-216-295-91	s	RES, CHIP 0
R218	1-216-631-11	s	METAL, CHIP 150 0.5% 1/10W
R220	1-216-049-91	■	METAL, CHIP 1k 5% 1/10W
R221	1-216-295-91	s	RES, CHIP 0
R222	1-216-619-11	s	METAL, CHIP 47 0.5% 1/10W
R224	1-216-025-91	s	METAL, CHIP 100 5% 1/10W
R225-230	1-216-049-91	s	METAL, CHIP 1k 5% 1/10W
R232	1-216-049-91	s	METAL, CHIP 1k 5% 1/10W
R233	1-216-049-91	s	METAL, CHIP 1k 5% 1/10W
R234	1-216-049-91	s	METAL, CHIP 1k 5% 1/10W
R236	1-216-049-91	s	METAL, CHIP 1k 5% 1/10W
R237	1-216-049-91	s	METAL, CHIP 1k ■ 1/10W
R239	1-216-049-91	s	METAL, CHIP 1k 5% 1/10W
R240-251	1-216-033-00	s	METAL, CHIP 220 5% 1/10W
R252	1-216-295-91	s	RES, CHIP 0
R254	1-216-041-00	s	METAL, CHIP 470 5% 1/10W
R255-282	1-216-295-91	s	RES, CHIP 0
R284	1-216-295-91	s	RES, CHIP 0
R286	1-216-295-91	s	RES, CHIP 0
R288	1-216-295-91	s	RES, CHIP 0
R289	1-216-295-91	s	RES, CHIP 0
R295-300	1-216-295-91	s	RES, CHIP 0

(IO-119 BOARD(ESBK-7031(UC/J/CE)))

Ref. No. or Q'ty	Part No.	SP	Description
R301	1-216-073-00	s	METAL, CHIP 10k 5% 1/10W
R303	1-216-073-00	s	METAL, CHIP 10k ■ 1/10W
R305	1-216-295-91	■	RES, CHIP 0
R306	1-216-647-11	s	METAL, CHIP 680 0.5% 1/10W
R307	1-216-649-11	s	METAL, CHIP 820 0.5% 1/10W
R308	1-216-295-91	s	RES, CHIP 0
R310	1-216-295-91	s	RES, CHIP 0
R311	1-216-295-91	s	RES, CHIP 0
R312	1-216-295-91	s	RES, CHIP 0
R314-318	1-216-295-91	s	RES, CHIP 0
R319	1-216-049-91	s	METAL, CHIP 1k ■ 1/10W
R320	1-216-045-00	s	METAL, CHIP 680 5% 1/10W
R321-326	1-216-295-91	■	RES, CHIP 0
R327	1-216-073-00	■	METAL, CHIP 10k ■ 1/10W
R328	1-216-647-11	s	METAL, CHIP 680 0.5% 1/10W
R329	1-216-649-11	s	METAL, CHIP 820 0.5% 1/10W
R330-355	1-216-295-91	s	RES, CHIP 0
R357	1-216-295-91	s	RES, CHIP 0
R358	1-216-295-91	■	RES, CHIP 0
R359	1-216-295-91	s	RES, CHIP 0
R361	1-216-295-91	s	RES, CHIP 0
R362	1-216-295-91	s	RES, CHIP 0
R367	1-216-295-91	s	RES, CHIP 0
R368	1-216-295-91	s	RES, CHIP 0
R369	1-216-295-91	s	RES, CHIP 0
R370	1-216-295-91	s	RES, CHIP 0
R372	1-216-295-91	s	RES, CHIP 0
R373	1-216-295-91	s	RES, CHIP 0
R376	1-216-295-91	s	RES, CHIP 0
R377	1-216-647-11	s	METAL, CHIP 680 0.5% 1/10W
R378	1-216-649-11	s	METAL, CHIP 820 0.5% 1/10W
R379	1-216-647-11	s	METAL, CHIP 680 0.5% 1/10W
R380	1-216-649-11	s	METAL, CHIP 820 0.5% 1/10W
R381	1-216-039-00	s	METAL, CHIP 390 5% 1/10W
R382	1-216-039-00	s	METAL, CHIP 390 5% 1/10W
R383	1-216-295-91	s	RES, CHIP 0
R384	1-216-073-00	s	METAL, CHIP 10k 5% 1/10W
R385	1-216-049-91	s	METAL, CHIP 1k 5% 1/10W
R395	1-216-033-00	s	METAL, CHIP 220 5% 1/10W
R397	1-216-025-91	s	METAL, CHIP 100 5% 1/10W
R398	1-216-295-91	s	RES, CHIP 0
R401	1-216-295-91	s	RES, CHIP 0
R402	1-216-649-11	s	METAL, CHIP 820 0.5% 1/10W
R403	1-216-647-11	s	METAL, CHIP 680 0.5% 1/10W
R404	1-216-295-91	s	RES, CHIP 0
R405	1-216-295-91	s	RES, CHIP 0
R406	1-216-647-11	s	METAL, CHIP 680 0.5% 1/10W
R407	1-216-649-11	s	METAL, CHIP 820 0.5% 1/10W
R408	1-216-647-11	s	METAL, CHIP 680 0.5% 1/10W
R409	1-216-649-11	s	METAL, CHIP 820 0.5% 1/10W
R410-426	1-216-295-91	■	RES, CHIP 0
R427	1-216-647-11	s	METAL, CHIP 680 0.5% 1/10W
R428	1-216-295-91	s	RES, CHIP 0
R429	1-216-647-11	■	METAL, CHIP 680 0.5% 1/10W
R430	1-216-649-11	s	METAL, CHIP 820 0.5% 1/10W
R431	1-216-647-11	■	METAL, CHIP 680 0.5% 1/10W
R432	1-216-649-11	■	METAL, CHIP 820 0.5% 1/10W
R433	1-216-295-91	s	RES, CHIP 0
R434	1-216-295-91	■	RES, CHIP 0

(IO-119 BOARD(ESBK-7031(UC/J/CE)))

Ref. No. or Q'ty	Part No.	SP	Description
R435	1-216-649-11	s	METAL, CHIP 820 0.5% 1/10W
R436	1-216-295-91	s	RES, CHIP 0
R437	1-216-295-91	s	RES, CHIP 0
R438	1-216-295-91	s	RES, CHIP 0
R439	1-216-295-91	s	RES, CHIP 0
R443	1-216-295-91	s	RES, CHIP 0
R449	1-216-647-11	s	METAL, CHIP 680 0.5% 1/10W
R450	1-216-649-11	■	METAL, CHIP 820 0.5% 1/10W
R451	1-216-649-11	s	METAL, CHIP 820 0.5% 1/10W
R452	1-216-647-11	s	METAL, CHIP 680 0.5% 1/10W
R453-468	1-216-295-91	s	RES, CHIP 0
R472	1-216-295-91	s	RES, CHIP 0
R473	1-216-295-91	s	RES, CHIP 0
R474	1-216-295-91	s	RES, CHIP 0
R475	1-216-295-91	s	RES, CHIP 0
R490	1-216-647-11	s	METAL, CHIP 680 0.5% 1/10W
R491	1-216-649-11	■	METAL, CHIP 820 0.5% 1/10W
R492	1-216-097-91	s	METAL, CHIP 100k 5% 1/10W
R496	1-216-073-00	■	METAL, CHIP 10k 5% 1/10W
R526	1-216-073-00	s	METAL, CHIP 10k 5% 1/10W
R527	1-216-073-00	s	METAL, CHIP 10k 5% 1/10W
R557	1-216-097-91	s	METAL, CHIP 100k 5% 1/10W
R558	1-216-639-11	s	METAL, CHIP 330 0.5% 1/10W
R559	1-216-641-11	■	METAL, CHIP 390 0.5% 1/10W
R560	1-216-295-91	s	RES, CHIP 0
R561	1-216-073-00	s	METAL, CHIP 10k 5% 1/10W
R562	1-216-073-00	s	METAL, CHIP 10k 5% 1/10W
R563	1-216-049-91	s	METAL, CHIP 1k ■ 1/10W
R564	1-216-073-00	■	METAL, CHIP 10k 5% 1/10W
R565	1-216-097-91	s	METAL, CHIP 100k 5% 1/10W
R566	1-216-295-91	s	RES, CHIP 0
R567	1-216-295-91	s	RES, CHIP 0
R573	1-216-295-91	■	RES, CHIP 0
R574	1-216-295-91	s	RES, CHIP 0
R587	1-216-295-91	s	RES, CHIP 0
R588	1-216-295-91	s	RES, CHIP 0
R589	1-216-295-91	s	RES, CHIP 0
R590	1-216-295-91	s	RES, CHIP 0
R619	1-216-295-91	s	RES, CHIP 0
R622	1-216-295-91	s	RES, CHIP 0
R640	1-216-647-11	s	METAL, CHIP 680 0.5% 1/10W
R641	1-216-649-11	s	METAL, CHIP 820 0.5% 1/10W
R642	1-216-647-11	s	METAL, CHIP 680 0.5% 1/10W
R643	1-216-649-11	s	METAL, CHIP 820 0.5% 1/10W
R644	1-216-295-91	s	RES, CHIP 0
R726	1-216-073-00	■	METAL, CHIP 10k 5% 1/10W
R727	1-216-073-00	s	METAL, CHIP 10k 5% 1/10W
R756	1-216-073-00	s	METAL, CHIP 10k ■ 1/10W
R757	1-216-073-00	s	METAL, CHIP 10k 5% 1/10W
R758	1-216-049-91	s	METAL, CHIP 1k 5% 1/10W
R759	1-216-295-91	s	RES, CHIP 0
R760	1-216-295-91	s	RES, CHIP 0
R761	1-216-073-00	s	METAL, CHIP 10k 5% 1/10W
R762	1-216-073-00	■	METAL, CHIP 10k 5% 1/10W
R817	1-216-009-00	s	METAL, CHIP 22 5% 1/10W
R818	1-216-009-00	s	METAL, CHIP 22 5% 1/10W
R819	1-216-049-91	s	METAL, CHIP 1k 5% 1/10W
R820	1-216-037-00	s	METAL, CHIP 330 5% 1/10W
R821	1-216-295-91	s	RES, CHIP 0

(IO-119 BOARD(ESBK-7031(UC/J/CE)))

Ref. No. or Q'ty	Part No.	SP	Description
R822	1-216-037-00	s	METAL, CHIP 330 5% 1/10W
R823	1-216-037-00	s	METAL, CHIP 330 5% 1/10W
R824	1-216-647-11	■	METAL, CHIP 680 0.5% 1/10W
R838	1-216-295-91	s	RES, CHIP 0
R848	1-216-647-11	s	METAL, CHIP 680 0.5% 1/10W
R849	1-216-649-11	s	METAL, CHIP 820 0.5% 1/10W
R850	1-216-649-11	■	METAL, CHIP 820 0.5% 1/10W
R851	1-216-647-11	s	METAL, CHIP 680 0.5% 1/10W
R852	1-216-641-11	s	METAL, CHIP 390 0.5% 1/10W
R853	1-216-639-11	s	METAL, CHIP 330 0.5% 1/10W
R854	1-216-649-11	■	METAL, CHIP 820 0.5% 1/10W
R855	1-216-295-91	s	RES, CHIP ■
R856	1-216-647-11	s	METAL, CHIP 680 0.5% 1/10W
R857	1-216-649-11	■	METAL, CHIP 820 0.5% 1/10W
R858	1-216-295-91	s	RES, CHIP 0
R859	1-216-295-91	s	RES, CHIP 0
R860	1-216-295-91	■	RES, CHIP 0
R873	1-216-097-91	s	METAL, CHIP 100k ■ 1/10W
R902	1-216-097-91	s	METAL, CHIP 100k 5% 1/10W
R903	1-216-295-91	s	RES, CHIP 0
R904	1-216-097-91	■	METAL, CHIP 100k 5% 1/10W
R944	1-216-073-00	s	METAL, CHIP 10k 5% 1/10W
R1001	1-216-022-00	s	METAL, CHIP 75 5% 1/10W
R1002	1-216-033-00	s	METAL, CHIP 220 5% 1/10W
R1003	1-216-033-00	s	METAL, CHIP 220 5% 1/10W
R1004	1-216-105-91	■	METAL, CHIP 220k 5% 1/10W
R1005	1-216-089-91	s	METAL, CHIP 47k 5% 1/10W
R1006	1-216-628-11	s	METAL, CHIP 110 0.5% 1/10W
R1007	1-216-073-00	s	METAL, CHIP 10k ■ 1/10W
R1008	1-216-073-00	s	METAL, CHIP 10k 5% 1/10W
R1009	1-216-049-91	s	METAL, CHIP 1k 5% 1/10W
R1010	1-216-049-91	s	METAL, CHIP 1k 5% 1/10W
R1011	1-216-073-00	s	METAL, CHIP 10k 5% 1/10W
R1012	1-216-073-00	s	METAL, CHIP 10k 5% 1/10W
R1017	1-216-073-00	s	METAL, CHIP 10k 5% 1/10W
R1018	1-216-073-00	s	METAL, CHIP 10k 5% 1/10W
R1033	1-216-009-00	s	METAL, CHIP 22 5% 1/10W
R1034	1-216-647-11	s	METAL, CHIP 680 0.5% 1/10W
R1035	1-216-649-11	s	METAL, CHIP 820 0.5% 1/10W
R1036	1-216-295-91	s	RES, CHIP 0
R1037	1-216-295-91	■	RES, CHIP 0
R1045	1-216-097-91	s	METAL, CHIP 100k 5% 1/10W
R1046	1-216-097-91	s	METAL, CHIP 100k 5% 1/10W
R1111	1-216-041-00	s	METAL, CHIP 470 5% 1/10W
R1112	1-216-041-00	s	METAL, CHIP 470 ■ 1/10W
R1113	1-216-647-11	s	METAL, CHIP 680 0.5% 1/10W
R1114	1-216-649-11	s	METAL, CHIP 820 0.5% 1/10W
R1115	1-216-647-11	s	METAL, CHIP 680 0.5% 1/10W
R1116	1-216-649-11	s	METAL, CHIP 820 0.5% 1/10W
R1117	1-216-097-91	s	METAL, CHIP 100k 5% 1/10W
R1148	1-216-097-91	s	METAL, CHIP 100k 5% 1/10W
R1201	1-216-647-11	s	METAL, CHIP 680 0.5% 1/10W
R1202	1-216-649-11	s	METAL, CHIP 820 0.5% 1/10W
R1203	1-216-295-91	s	RES, CHIP 0
R1204	1-216-295-91	s	RES, CHIP ■
R1205	1-216-295-91	s	RES, CHIP ■
R1217	1-216-009-00	s	METAL, CHIP 22 5% 1/10W
R1223	1-216-647-11	s	METAL, CHIP 680 0.5% 1/10W
R1224	1-216-649-11	s	METAL, CHIP 820 0.5% 1/10W

(IO-119 BOARD(ESBK-7031(UC/J/CE)))

Ref. No. or Q'ty	Part No.	SP	Description
R1244	1-216-009-00	s	METAL, CHIP 22 Ω 1/10W
R1245	1-216-073-00	s	METAL, CHIP 10k 5% 1/10W
R1246	1-216-073-00	■	METAL, CHIP 10k 5% 1/10W
R1301	1-216-073-00	s	METAL, CHIP 10k 5% 1/10W
R2108	1-216-295-91	s	RES, CHIP 0
R2109	1-216-647-11	s	METAL, CHIP 680 0.5% 1/10W
R2110	1-216-649-11	s	METAL, CHIP 820 0.5% 1/10W
R2111	1-216-295-91	■	RES, CHIP 0
R2114	1-216-295-91	■	RES, CHIP 0
R2117	1-216-295-91	s	RES, CHIP 0
R2119	1-216-295-91	s	RES, CHIP 0
R2123	1-216-295-91	s	RES, CHIP 0
R2131	1-216-647-11	s	METAL, CHIP 680 0.5% 1/10W
R2132	1-216-649-11	s	METAL, CHIP 820 0.5% 1/10W
R2151	1-216-295-91	s	RES, CHIP 0
R2152	1-216-295-91	s	RES, CHIP 0
R2153	1-216-639-11	■	METAL, CHIP 330 0.5% 1/10W
R2154	1-216-641-11	s	METAL, CHIP 390 0.5% 1/10W
R2155	1-216-105-91	s	METAL, CHIP 220k 5% 1/10W
R2156	1-216-295-91	s	RES, CHIP 0
R2158	1-216-295-91	■	RES, CHIP 0
R2159	1-216-065-00	s	METAL, CHIP 4.7k 5% 1/10W
R2206	1-216-295-91	s	RES, CHIP 0
R2207	1-216-647-11	s	METAL, CHIP 680 0.5% 1/10W
R2208	1-216-649-11	s	METAL, CHIP 820 0.5% 1/10W
R2222	1-216-105-91	s	METAL, CHIP 220k 5% 1/10W
R2223	1-216-295-91	s	RES, CHIP 0
R2304	1-216-033-00	s	METAL, CHIP 220 5% 1/10W
R2305	1-216-033-00	s	METAL, CHIP 220 5% 1/10W
R2307	1-216-049-91	s	METAL, CHIP 1k 5% 1/10W
R2309	1-216-001-00	s	METAL, CHIP 10 5% 1/10W
R2310	1-216-001-00	s	METAL, CHIP 10 5% 1/10W
R2312	1-216-029-00	s	METAL, CHIP 150 5% 1/10W
R2313	1-216-049-91	s	METAL, CHIP 1k 5% 1/10W
R2315	1-216-029-00	s	METAL, CHIP 150 5% 1/10W
R2317	1-216-022-00	s	METAL, CHIP 75 5% 1/10W
R2319	1-216-295-91	s	RES, CHIP 0
R2336	1-216-105-91	s	METAL, CHIP 220k 5% 1/10W
R2337	1-216-295-91	s	RES, CHIP 0
R2338	1-216-065-00	s	METAL, CHIP 4.7k 5% 1/10W
R2340	1-216-061-00	s	METAL, CHIP 3.3k 5% 1/10W
R2341	1-216-055-00	s	METAL, CHIP 1.8k 5% 1/10W
R2359	1-216-073-00	s	METAL, CHIP 10k 5% 1/10W
R2401	1-216-295-91	s	RES, CHIP 0
R2412	1-216-295-91	s	RES, CHIP 0
R2413	1-216-295-91	s	RES, CHIP 0
R2415	1-216-105-91	s	METAL, CHIP 220k 5% 1/10W
R2420	1-216-097-91	s	METAL, CHIP 100k 5% 1/10W
R2421	1-216-097-91	s	METAL, CHIP 100k 5% 1/10W
R2422	1-216-073-00	s	METAL, CHIP 10k 5% 1/10W
R2423	1-216-073-00	s	METAL, CHIP 10k 5% 1/10W
R2424	1-216-097-91	s	METAL, CHIP 100k 5% 1/10W
R2425	1-216-097-91	■	METAL, CHIP 100k 5% 1/10W
R2501	1-216-295-91	s	RES, CHIP 0
R2523	1-216-641-11	s	METAL, CHIP 390 0.5% 1/10W
R2524	1-216-295-91	s	RES, CHIP 0
R2525	1-216-641-11	s	METAL, CHIP 390 0.5% 1/10W
R2526	1-216-639-11	s	METAL, CHIP 330 0.5% 1/10W
R2527	1-216-641-11	s	METAL, CHIP 390 0.5% 1/10W

(IO-119 BOARD(ESBK-7031(UC/J/CE)))

Ref. No. or Q'ty	Part No.	SP	Description
R2528	1-216-639-11	■	METAL, CHIP 330 0.5% 1/10W
R2529	1-216-641-11	■	METAL, CHIP 390 0.5% 1/10W
R2530	1-216-639-11	s	METAL, CHIP 330 0.5% 1/10W
R2531	1-216-073-00	s	METAL, CHIP 10k 5% 1/10W
R2532	1-216-639-11	s	METAL, CHIP 330 0.5% 1/10W
R2533	1-216-641-11	s	METAL, CHIP 390 0.5% 1/10W
R2534	1-216-639-11	s	METAL, CHIP 330 0.5% 1/10W
R2535	1-216-641-11	s	METAL, CHIP 390 0.5% 1/10W
R2536	1-216-639-11	■	METAL, CHIP 330 0.5% 1/10W
R2537	1-216-049-91	■	METAL, CHIP 1k 5% 1/10W
R2710	1-216-295-91	■	RES, CHIP 0
R2711	1-216-295-91	s	RES, CHIP 0
R2712	1-216-097-91	s	METAL, CHIP 100k 5% 1/10W
R2716	1-216-641-11	s	METAL, CHIP 390 0.5% 1/10W
R2717	1-216-639-11	s	METAL, CHIP 330 0.5% 1/10W
R2718	1-216-641-11	■	METAL, CHIP 390 0.5% 1/10W
R2719	1-216-639-11	s	METAL, CHIP 330 0.5% 1/10W
R2720	1-216-641-11	s	METAL, CHIP 390 0.5% 1/10W
R2721	1-216-639-11	s	METAL, CHIP 330 0.5% 1/10W
R2723	1-216-295-91	■	RES, CHIP 0
R2741	1-216-641-11	s	METAL, CHIP 390 0.5% 1/10W
R2742	1-216-639-11	s	METAL, CHIP 330 0.5% 1/10W
R2743	1-216-641-11	s	METAL, CHIP 390 0.5% 1/10W
R2748	1-216-639-11	s	METAL, CHIP 330 0.5% 1/10W
R2749	1-216-639-11	s	METAL, CHIP 330 0.5% 1/10W
R2750	1-216-641-11	■	METAL, CHIP 390 0.5% 1/10W
R3108	1-216-009-00	s	METAL, CHIP 22 5% 1/10W
R3109	1-216-009-00	■	METAL, CHIP 22 5% 1/10W
R3110	1-216-647-11	■	METAL, CHIP 680 0.5% 1/10W
R3111	1-216-649-11	s	METAL, CHIP 820 0.5% 1/10W
RB101-106	1-239-711-11	s	RESISTOR BLOCK, CHIP 0x4
RB107	1-239-305-11	s	RESISTOR BLOCK, CHIP 4.7kx8
RB201-206	1-239-711-11	■	RESISTOR BLOCK, CHIP 0x4
RB301	1-239-711-11	■	RESISTOR BLOCK, CHIP 0x4
RB302	1-239-711-11	s	RESISTOR BLOCK, CHIP 0x4
RB303	1-239-711-11	s	RESISTOR BLOCK, CHIP 0x4
RB304	1-239-305-11	s	RESISTOR BLOCK, CHIP 4.7kx8
RB401	1-239-305-11	■	RESISTOR BLOCK, CHIP 4.7kx8
RB402	1-239-305-11	s	RESISTOR BLOCK, CHIP 4.7kx8
RB403	1-239-305-11	■	RESISTOR BLOCK, CHIP 4.7kx8
RB404	1-239-305-11	■	RESISTOR BLOCK, CHIP 4.7kx8
RB405	1-239-306-11	s	RESISTOR BLOCK, CHIP 10kx8
RB406	1-239-305-11	■	RESISTOR BLOCK, CHIP 4.7kx8
RB407	1-239-305-11	s	RESISTOR BLOCK, CHIP 4.7kx8
RB501-516	1-239-305-11	■	RESISTOR BLOCK, CHIP 4.7kx8
RB517	1-239-306-11	s	RESISTOR BLOCK, CHIP 10kx8
RB518	1-236-908-11	s	RESISTOR BLOCK, CHIP 10kx4
RB519	1-236-904-11	s	RESISTOR BLOCK, CHIP 1.0kx4
RB520	1-236-904-11	s	RESISTOR BLOCK, CHIP 1.0kx4
RB601	1-239-389-11	■	RESISTOR BLOCK, CHIP 47kx4
RB602	1-239-389-11	s	RESISTOR BLOCK, CHIP 47kx4
RB603	1-239-389-11	s	RESISTOR BLOCK, CHIP 47kx4
RB604	1-239-389-11	s	RESISTOR BLOCK, CHIP 47kx4
RB701-716	1-239-305-11	■	RESISTOR BLOCK, CHIP 4.7kx8

(IO-119 BOARD(ESBK-7031(UC/J/CE)))

Ref. No. or Q'ty	Part No.	SP	Description
RB717	1-236-908-11	■	RESISTOR BLOCK, CHIP 10kx4
RB718	1-236-908-11	s	RESISTOR BLOCK, CHIP 10kx4
RB719	1-236-904-11	s	RESISTOR BLOCK, CHIP 1.0kx4
RB720	1-236-904-11	s	RESISTOR BLOCK, CHIP 1.0kx4
RB801	1-239-309-11	s	RESISTOR BLOCK, CHIP 100kx8
RB802-806	1-239-621-11	s	RESISTOR BLOCK, CHIP 22x4
RB1001	1-236-908-11	s	RESISTOR BLOCK, CHIP 10kx4
RB1002	1-239-306-11	s	RESISTOR BLOCK, CHIP 10kx8
RB1003	1-236-904-11	s	RESISTOR BLOCK, CHIP 1.0kx4
RB1004	1-236-904-11	s	RESISTOR BLOCK, CHIP 1.0kx4
RB1005	1-239-309-11	s	RESISTOR BLOCK, CHIP 100kx8
RB1101-1108	1-239-621-11	s	RESISTOR BLOCK, CHIP 22x4
RB1201-1210	1-239-621-11	s	RESISTOR BLOCK, CHIP 22x4
RB1301	1-239-306-11	s	RESISTOR BLOCK, CHIP 10kx8
RV101	1-241-263-11	s	RES, ADJ, METAL 5k
RV201	1-241-263-11	s	RES, ADJ, METAL 5k
RV301	1-241-263-11	s	RES, ADJ, METAL 5k
S401	1-570-623-11	■	SWITCH, DIP 8-CKT
S501	1-570-623-11	■	SWITCH, DIP 8-CKT
S1001	1-570-623-11	■	SWITCH, DIP 8-CKT
T1001	1-437-194-21	■	TRANSFORMER, PULSE
X501	1-579-996-21	s	RESONATOR, CERAMIC 20.00MHz
X701	1-579-996-21	■	RESONATOR, CERAMIC 20.00MHz
X801	1-760-275-11	■	VCO, CRYSTAL 27.00MHz
X1001	1-567-970-11	■	CRYSTAL 24.576MHz

IO-148 BOARD(ESBK-7032(UC/J/CE))

Ref. No. or Q'ty	Part No.	SP	Description
This mounted circuit board is not supplied for repair part.			
5pcs	7-621-770-87	s	SCREW +B 2.6x5
5pcs	3-189-543-03	o	IC HEAT SINK (A)
5pcs	3-189-544-03	o	IC HEAT SINK (B)
C1	1-163-038-91	s	CERAMIC, CHIP 0.1uF 25V
C2	1-163-038-91	s	CERAMIC, CHIP 0.1uF 25V
C3	1-124-234-00	s	ELECT 22uF 20% 16V
C4	1-163-038-91	s	CERAMIC, CHIP 0.1uF 25V
C5	1-163-038-91	s	CERAMIC, CHIP 0.1uF 25V
C6	1-163-237-11	s	CERAMIC, CHIP 27pF 5% 50V
C7	1-124-261-00	s	ELECT 10uF 20% 50V
C8	1-124-234-00	■	ELECT 22uF 20% 16V
C9	1-124-589-11	s	ELECT 47uF 20% 16V
C11	1-164-232-11	s	CERAMIC, CHIP 0.01uF 10% 100V
C12	1-164-232-11	■	CERAMIC, CHIP 0.01uF 10% 100V
C13	1-124-234-00	s	ELECT 22uF 20% 16V
C14	1-163-038-91	s	CERAMIC, CHIP 0.1uF 25V
C15	1-163-243-11	■	CERAMIC, CHIP 47pF 5% 50V
C16-22	1-163-038-91	s	CERAMIC, CHIP 0.1uF 25V
C23	1-124-234-00	s	ELECT 22uF 20% 16V
C24	1-163-038-91	■	CERAMIC, CHIP 0.1uF 25V
C25	1-163-038-91	■	CERAMIC, CHIP 0.1uF 25V
C26	1-163-038-91	s	CERAMIC, CHIP 0.1uF 25V
C27	1-163-038-91	■	CERAMIC, CHIP 0.1uF 25V
C28	1-124-234-00	s	ELECT 22uF 20% 16V
C29-53	1-163-038-91	s	CERAMIC, CHIP 0.1uF 25V
C201	1-163-038-91	s	CERAMIC, CHIP 0.1uF 25V
C202	1-163-038-91	s	CERAMIC, CHIP 0.1uF 25V
C203	1-124-234-00	■	ELECT 22uF 20% 16V
C204	1-163-038-91	s	CERAMIC, CHIP 0.1uF 25V
C205	1-163-038-91	s	CERAMIC, CHIP 0.1uF 25V
C206	1-163-237-11	■	CERAMIC, CHIP 27pF 5% 50V
C207	1-124-261-00	s	ELECT 10uF 20% 50V
C208	1-124-234-00	s	ELECT 22uF 20% 16V
C209	1-124-589-11	s	ELECT 47uF 20% 16V
C211	1-164-232-11	s	CERAMIC, CHIP 0.01uF 10% 100V
C212	1-164-232-11	s	CERAMIC, CHIP 0.01uF 10% 100V
C213	1-124-234-00	s	ELECT 22uF 20% 16V
C214	1-163-038-91	s	CERAMIC, CHIP 0.1uF 25V
C215	1-163-243-11	s	CERAMIC, CHIP 47pF 5% 50V
C216-222	1-163-038-91	s	CERAMIC, CHIP 0.1uF 25V
C223	1-124-234-00	s	ELECT 22uF 20% 16V
C224	1-163-038-91	s	CERAMIC, CHIP 0.1uF 25V
C225	1-163-038-91	s	CERAMIC, CHIP 0.1uF 25V
C226	1-163-038-91	s	CERAMIC, CHIP 0.1uF 25V
C227	1-163-038-91	s	CERAMIC, CHIP 0.1uF 25V
C228	1-124-234-00	s	ELECT 22uF 20% 16V
C229-249	1-163-038-91	s	CERAMIC, CHIP 0.1uF 25V
C301	1-163-038-91	s	CERAMIC, CHIP 0.1uF 25V
C302	1-163-038-91	s	CERAMIC, CHIP 0.1uF 25V
C303	1-124-234-00	s	ELECT 22uF 20% 16V
C304	1-163-038-91	s	CERAMIC, CHIP 0.1uF 25V
C305	1-163-038-91	s	CERAMIC, CHIP 0.1uF 25V
C306	1-163-237-11	s	CERAMIC, CHIP 27pF 5% 50V
C307	1-124-261-00	s	ELECT 10uF 20% 50V
C308	1-124-234-00	s	ELECT 22uF 20% 16V
C309	1-124-589-11	s	ELECT 47uF 20% 16V
C311	1-164-232-11	s	CERAMIC, CHIP 0.01uF 10% 100V
C312	1-164-232-11	s	CERAMIC, CHIP 0.01uF 10% 100V

(IO-148 BOARD(ESBK-7032(UC/J/CE)))

Ref. No. or Q'ty	Part No.	SP	Description
C313	1-124-234-00	s	ELECT 22uF 20% 16V
C314	1-163-038-91	s	CERAMIC, CHIP 0.1uF 25V
C315	1-163-243-11	s	CERAMIC, CHIP 47pF 5% 50V
C316-322	1-163-038-91	■	CERAMIC, CHIP 0.1uF 25V
C323	1-124-234-00	s	ELECT 22uF 20% 16V
C324	1-163-038-91	s	CERAMIC, CHIP 0.1uF 25V
C325	1-163-038-91	s	CERAMIC, CHIP 0.1uF 25V
C326	1-163-038-91	s	CERAMIC, CHIP 0.1uF 25V
C327	1-163-038-91	s	CERAMIC, CHIP 0.1uF 25V
C328	1-124-234-00	s	ELECT 22uF 20% 16V
C329-349	1-163-038-91	s	CERAMIC, CHIP 0.1uF 25V
C401	1-163-038-91	s	CERAMIC, CHIP 0.1uF 25V
C402	1-163-038-91	s	CERAMIC, CHIP 0.1uF 25V
C403	1-124-234-00	s	ELECT 22uF 20% 16V
C404	1-163-038-91	■	CERAMIC, CHIP 0.1uF 25V
C405	1-163-038-91	s	CERAMIC, CHIP 0.1uF 25V
C406	1-163-237-11	s	CERAMIC, CHIP 27pF 5% 50V
C407	1-124-261-00	s	ELECT 10uF 20% 50V
C408	1-124-234-00	s	ELECT 22uF 20% 16V
C409	1-124-589-11	s	ELECT 47uF 20% 16V
C411	1-164-232-11	s	CERAMIC, CHIP 0.01uF 10% 100V
C412	1-164-232-11	s	CERAMIC, CHIP 0.01uF 10% 100V
C413	1-124-234-00	■	ELECT 22uF 20% 16V
C414	1-163-038-91	■	CERAMIC, CHIP 0.1uF 25V
C415	1-163-243-11	s	CERAMIC, CHIP 47pF 5% 50V
C416-422	1-163-038-91	s	CERAMIC, CHIP 0.1uF 25V
C423	1-124-234-00	■	ELECT 22uF 20% 16V
C424	1-163-038-91	s	CERAMIC, CHIP 0.1uF 25V
C425	1-163-038-91	s	CERAMIC, CHIP 0.1uF 25V
C426	1-163-038-91	s	CERAMIC, CHIP 0.1uF 25V
C427	1-163-038-91	s	CERAMIC, CHIP 0.1uF 25V
C428	1-124-234-00	s	ELECT 22uF 20% 16V
C429-436	1-163-038-91	s	CERAMIC, CHIP 0.1uF 25V
C438-449	1-163-038-91	s	CERAMIC, CHIP 0.1uF 25V
C501-508	1-163-038-91	s	CERAMIC, CHIP 0.1uF 25V
C509	1-124-234-00	s	ELECT 22uF 20% 16V
C510	1-124-234-00	■	ELECT 22uF 20% 16V
C511-516	1-163-038-91	s	CERAMIC, CHIP 0.1uF 25V
C517	1-124-589-11	s	ELECT 47uF 20% 16V
C518	1-163-121-00	s	CERAMIC, CHIP 150pF 5% 50V
C519	1-163-038-91	s	CERAMIC, CHIP 0.1uF 25V
C520	1-163-038-91	s	CERAMIC, CHIP 0.1uF 25V
C521	1-124-261-00	s	ELECT 10uF 20% 50V
C522	1-163-038-91	s	CERAMIC, CHIP 0.1uF 25V
C523	1-124-234-00	s	ELECT 22uF 20% 16V
C524	1-163-038-91	s	CERAMIC, CHIP 0.1uF 25V
C526	1-124-234-00	s	ELECT 22uF 20% 16V
C527	1-163-038-91	s	CERAMIC, CHIP 0.1uF 25V
C528	1-163-038-91	s	CERAMIC, CHIP 0.1uF 25V
C529	1-124-234-00	s	ELECT 22uF 20% 16V
C530	1-163-038-91	s	CERAMIC, CHIP 0.1uF 25V
C531	1-163-038-91	s	CERAMIC, CHIP 0.1uF 25V
C532	1-124-234-00	s	ELECT 22uF 20% 16V
C533	1-124-234-00	s	ELECT 22uF 20% 16V
C534	1-163-038-91	s	CERAMIC, CHIP 0.1uF 25V
C535	1-163-038-91	s	CERAMIC, CHIP 0.1uF 25V
C536	1-163-038-91	s	CERAMIC, CHIP 0.1uF 25V
C537	1-124-234-00	s	ELECT 22uF 20% 16V
C538	1-163-038-91	s	CERAMIC, CHIP 0.1uF 25V

(IO-148 BOARD(ESBK-7032(UC/J/CE)))

Ref. No. or Q'ty	Part No.	SP	Description
C539	1-163-038-91	s	CERAMIC, CHIP 0.1uF 25V
C602-607	1-163-038-91	■	CERAMIC, CHIP 0.1uF 25V
C609	1-163-038-91	■	CERAMIC, CHIP 0.1uF 25V
C610	1-163-037-11	s	CERAMIC, CHIP 0.022uF 10% 25V
C611-619	1-163-038-91	■	CERAMIC, CHIP 0.1uF 25V
C620	1-124-589-11	s	ELECT 47uF 20% 16V
C621	1-163-243-11	s	CERAMIC, CHIP 47pF ■ 50V
C622	1-124-589-11	s	ELECT 47uF 20% 16V
C623	1-124-589-11	s	ELECT 47uF 20% 16V
C628	1-163-009-11	■	CERAMIC, CHIP 0.001uF 10% 50V
C635	1-126-163-11	■	ELECT 4.7uF 20% 50V
C719	1-163-038-91	s	CERAMIC, CHIP 0.1uF 25V
C801	1-163-038-91	s	CERAMIC, CHIP 0.1uF 25V
C802	1-163-038-91	■	CERAMIC, CHIP 0.1uF 25V
C803	1-163-251-11	s	CERAMIC, CHIP 100pF 5% 50V
C804-816	1-163-038-91	s	CERAMIC, CHIP 0.1uF 25V
C901	1-124-589-11	■	ELECT 47uF 20% 16V
C902	1-124-248-00	s	ELECT 22uF 20% 35V
C903	1-163-038-91	s	CERAMIC, CHIP 0.1uF 25V
C904	1-124-589-11	s	ELECT 47uF 20% 16V
C905	1-124-248-00	s	ELECT 22uF 20% 35V
C906	1-163-038-91	s	CERAMIC, CHIP 0.1uF 25V
CN21	1-778-943-11	s	CONNECTOR, DIN 96P, FEMALE
CN22	1-778-943-11	s	CONNECTOR, DIN 96P, FEMALE
CN23	1-568-144-11	o	CONNECTOR, DIN 96P, MALE
CN24	1-568-144-11	o	CONNECTOR, DIN 96P, MALE
CN31	1-750-880-11	s	CONNECTOR, COAXIAL MINI, FEMALE
CN32	1-750-880-11	■	CONNECTOR, COAXIAL MINI, FEMALE
CN33	1-750-880-11	s	CONNECTOR, COAXIAL MINI, FEMALE
CN34	1-750-880-11	■	CONNECTOR, COAXIAL MINI, FEMALE
CN35	1-750-880-11	s	CONNECTOR, COAXIAL MINI, FEMALE
D2	8-719-404-35	■	DIODE MA141WK
D4	8-719-989-22	■	LED CL-150R-CD, RED
D5	8-719-989-22	■	LED CL-150R-CD, RED
D8	8-719-989-22	■	LED CL-150R-CD, RED
D9	8-719-989-22	s	LED CL-150R-CD, RED
D202	8-719-404-35	s	DIODE MA141WK
D204	8-719-989-22	s	LED CL-150R-CD, RED
D205	8-719-989-22	s	LED CL-150R-CD, RED
D208	8-719-989-22	■	LED CL-150R-CD, RED
D209	8-719-989-22	s	LED CL-150R-CD, RED
D302	8-719-404-35	s	DIODE MA141WK
D304	8-719-989-22	s	LED CL-150R-CD, RED
D305	8-719-989-22	s	LED CL-150R-CD, RED
D308	8-719-989-22	s	LED CL-150R-CD, RED
D309	8-719-989-22	s	LED CL-150R-CD, RED
D402	8-719-404-35	s	DIODE MA141WK
D404	8-719-989-22	s	LED CL-150R-CD, RED
D405	8-719-989-22	s	LED CL-150R-CD, RED
D408	8-719-989-22	s	LED CL-150R-CD, RED
D409	8-719-989-22	■	LED CL-150R-CD, RED
D412	8-719-987-43	s	LED CL-150PG-CD, GRN
D501	8-719-404-35	s	DIODE MA141WK
D502	8-719-404-35	s	DIODE MA141WK
D504	8-719-987-43	s	LED CL-150PG-CD, GRN
D505	8-719-987-43	s	LED CL-150PG-CD, GRN
D506	8-719-987-43	s	LED CL-150PG-CD, GRN
D601	8-719-987-43	s	LED CL-150PG-CD, GRN

(IO-148 BOARD(ESBK-7032(UC/J/CE)))

Ref. No. or Q'ty	Part No.	SP	Description
D602	8-719-987-43	s	LED CL-150PG-CD, GRN
D801	8-719-987-43	s	LED CL-150PG-CD, GRN
D803	8-719-987-43	s	LED CL-150PG-CD, GRN
D804-810	8-719-987-43	■	LED CL-150PG-CD, GRN
FB1	1-543-309-21	■	BEAD, FERRITE
FB2	1-543-309-21	s	BEAD, FERRITE
FB3	1-543-309-21	s	BEAD, FERRITE
FB201	1-543-309-21	s	BEAD, FERRITE
FB202	1-543-309-21	s	BEAD, FERRITE
FB203	1-543-309-21	■	BEAD, FERRITE
FB301	1-543-309-21	s	BEAD, FERRITE
FB302	1-543-309-21	s	BEAD, FERRITE
FB303	1-543-309-21	s	BEAD, FERRITE
FB401	1-543-309-21	s	BEAD, FERRITE
FB402	1-543-309-21	s	BEAD, FERRITE
FB403	1-543-309-21	s	BEAD, FERRITE
FB601	1-543-309-21	s	BEAD, FERRITE
FB604	1-543-309-21	s	BEAD, FERRITE
IC1	8-741-602-11	s	IC SBX1602A
IC2	8-759-515-12	s	IC SN74ALS574BNS
IC3	8-759-436-92	s	IC MC10125P
IC4	8-759-436-92	s	IC MC10125P
IC5	8-759-436-92	■	IC MC10125P
IC6	8-759-515-12	s	IC SN74ALS574BNS
IC7	8-759-160-22	s	IC CXD8337Q
IC8	8-759-515-12	s	IC SN74ALS574BNS
IC9	8-759-515-12	s	IC SN74ALS574BNS
IC10	8-759-515-12	s	IC SN74ALS574BNS
IC11	8-759-515-12	s	IC SN74ALS574BNS
IC12	8-759-515-12	s	IC SN74ALS574BNS
IC13	8-759-515-12	s	IC SN74ALS574BNS
IC15	8-759-925-76	s	IC SN74HC08ANS
IC16	8-759-289-69	s	IC CXD8280AQ
IC18	8-759-008-40	s	IC MC74HC4078F
IC19	8-759-926-29	s	IC SN74HC175ANS
IC20	8-759-926-77	s	IC SN74HC541ANS
IC21	8-759-925-74	■	IC TC74HC04ANS
IC22	8-759-239-55	s	IC TC74HC123AF
IC23	8-759-239-55	s	IC TC74HC123AF
IC24	8-759-925-76	s	IC SN74HC08ANS
IC25	8-759-930-35	s	IC SN74LS125ANS
IC26	8-759-926-77	■	IC SN74HC541ANS
IC201	8-741-602-11	s	IC SBX1602A
IC203	8-759-436-92	s	IC MC10125P
IC204	8-759-436-92	s	IC MC10125P
IC205	8-759-436-92	s	IC MC10125P
IC207	8-759-160-22	s	IC CXD8337Q
IC208	8-759-515-12	s	IC SN74ALS574BNS
IC209	8-759-515-12	s	IC SN74ALS574BNS
IC210	8-759-515-12	s	IC SN74ALS574BNS
IC211	8-759-515-12	s	IC SN74ALS574BNS
IC215	8-759-289-69	s	IC CXD8280AQ
IC217	8-759-008-40	■	IC MC74HC4078F
IC218	8-759-926-29	s	IC SN74HC175ANS
IC219	8-759-926-77	s	IC SN74HC541ANS
IC220	8-759-925-76	s	IC SN74HC08ANS
IC221	8-759-925-74	s	IC TC74HC04ANS
IC222	8-759-239-55	s	IC TC74HC123AF

(IO-148 BOARD(ESBK-7032(UC/J/CE)))

Ref. No. or Q'ty	Part No.	SP	Description
IC223	8-759-239-55	■	IC TC74HC123AF
IC224	8-759-925-76	s	IC SN74HC08ANS
IC225	8-759-930-35	s	IC SN74LS125ANS
IC226	8-759-926-77	s	IC SN74HC541ANS
IC301	8-741-602-11	s	IC SBX1602A
IC303	8-759-436-92	s	IC MC10125P
IC304	8-759-436-92	■	IC MC10125P
IC305	8-759-436-92	s	IC MC10125P
IC307	8-759-160-22	s	IC CXD8337Q
IC308	8-759-515-12	s	IC SN74ALS574BNS
IC309	8-759-515-12	s	IC SN74ALS574BNS
IC310	8-759-515-12	s	IC SN74ALS574BNS
IC311	8-759-515-12	■	IC SN74ALS574BNS
IC315	8-759-289-69	s	IC CXD8280AQ
IC317	8-759-008-40	■	IC MC74HC4078F
IC318	8-759-926-29	s	IC SN74HC175ANS
IC319	8-759-926-77	s	IC SN74HC541ANS
IC320	8-759-925-76	s	IC SN74HC08ANS
IC321	8-759-925-74	s	IC TC74HC04ANS
IC322	8-759-239-55	s	IC TC74HC123AF
IC323	8-759-239-55	■	IC TC74HC123AF
IC324	8-759-925-76	s	IC SN74HC08ANS
IC325	8-759-930-35	s	IC SN74LS125ANS
IC326	8-759-926-77	s	IC SN74HC541ANS
IC401	8-741-602-11	s	IC SBX1602A
IC403	8-759-436-92	s	IC MC10125P
IC404	8-759-436-92	s	IC MC10125P
IC405	8-759-436-92	s	IC MC10125P
IC407	8-759-160-22	s	IC CXD8337Q
IC408	8-759-515-12	s	IC SN74ALS574BNS
IC409	8-759-515-12	s	IC SN74ALS574BNS
IC410	8-759-515-12	s	IC SN74ALS574BNS
IC411	8-759-515-12	■	IC SN74ALS574BNS
IC415	8-759-925-76	■	IC SN74HC08ANS
IC416	8-759-289-69	■	IC CXD8280AQ
IC418	8-759-008-40	s	IC MC74HC4078F
IC419	8-759-926-29	■	IC SN74HC175ANS
IC420	8-759-926-77	■	IC SN74HC541ANS
IC421	8-759-925-74	s	IC TC74HC04ANS
IC422	8-759-239-55	■	IC TC74HC123AF
IC423	8-759-239-55	s	IC TC74HC123AF
IC424	8-759-925-76	s	IC SN74HC08ANS
IC425	8-759-930-35	s	IC SN74LS125ANS
IC426	8-759-926-77	s	IC SN74HC541ANS
IC501	8-759-515-12	s	IC SN74ALS574BNS
IC502	8-759-515-12	s	IC SN74ALS574BNS
IC503	8-759-519-12	■	IC CXD8281Q
IC504	8-759-268-12	■	IC CXD8885Q
IC505	8-759-347-40	s	IC SN74ALS02ANS-E05
IC506	8-759-934-11	s	IC SN74ALS32NS
IC507	8-759-515-63	s	IC IDT74FCT821ATSO
IC508	8-759-515-63	s	IC IDT74FCT821ATSO
IC509	8-759-515-63	s	IC IDT74FCT821ATSO
IC510	8-759-515-63	s	IC IDT74FCT821ATSO
IC511	8-752-202-90	s	IC CX22029
IC512	8-759-436-88	s	IC MC10124P
IC513	8-741-601-11	s	IC SBX1601A
IC514	8-759-436-92	s	IC MC10125P
IC515	8-752-050-69	s	IC CXA1389AQ

(IO-148 BOARD(ESBK-7032(UC/J/CE)))

Ref. No. or Q'ty	Part No.	SP	Description
IC601	8-759-939-92	s	IC SN74ALS541NS
IC602	8-759-049-12	s	IC SN74ALS540NS
IC603	8-759-049-12	■	IC SN74ALS540NS
IC604	8-759-939-92	s	IC SN74ALS541NS
IC605	8-759-295-09	s	IC TLC2932IPW
IC606	8-759-973-85	■	IC SN74ALS74ANS
IC607	8-759-934-54	s	IC SN74ALS273NS
IC608	8-759-947-80	s	IC SN74ALS86NS
IC609	8-759-973-85	s	IC SN74ALS74ANS
IC610	8-759-934-11	■	IC SN74ALS32NS
IC611	8-759-934-54	s	IC SN74ALS273NS
IC612	8-759-934-54	s	IC SN74ALS273NS
IC613	8-759-934-54	s	IC SN74ALS273NS
IC614	8-759-515-12	s	IC SN74ALS574BNS
IC615	8-759-515-12	s	IC SN74ALS574BNS
IC701	8-759-347-38	s	IC SN74ALS138ANS
IC801	8-759-515-12	s	IC SN74ALS574BNS
IC802	8-759-926-48	s	IC SN74HC244NS
IC803	8-759-925-90	s	IC SN74HC74ANS
IC804	8-759-925-85	s	IC SN74HC32ANS
IC805	8-759-268-29	s	IC SN74HC595ANS
IC806	8-759-268-29	s	IC SN74HC595ANS
IC807	8-759-268-29	s	IC SN74HC595ANS
IC809	8-759-926-48	s	IC SN74HC244NS
IC810	8-759-926-48	s	IC SN74HC244NS
IC811	8-759-926-12	s	IC SN74HC139ANS
IC812	8-759-926-12	s	IC SN74HC139ANS
IC813	8-759-925-76	s	IC SN74HC08ANS
IC814	8-759-973-85	s	IC SN74ALS74ANS
IC815	8-759-973-85	s	IC SN74ALS74ANS
L1-5	1-410-803-11	s	INDUCTOR CHIP 47NH
L201	1-410-803-11	s	INDUCTOR CHIP 47NH
L202	1-410-803-11	s	INDUCTOR CHIP 47NH
L203	1-410-369-11	s	INDUCTOR CHIP 1uH
L204	1-410-803-11	s	INDUCTOR CHIP 47NH
L205	1-410-803-11	s	INDUCTOR CHIP 47NH
L301	1-410-803-11	s	INDUCTOR CHIP 47NH
L302	1-410-803-11	s	INDUCTOR CHIP 47NH
L303	1-410-369-11	s	INDUCTOR CHIP 1uH
L304	1-410-803-11	s	INDUCTOR CHIP 47NH
L305	1-410-803-11	s	INDUCTOR CHIP 47NH
L401	1-410-803-11	s	INDUCTOR CHIP 47NH
L402	1-410-803-11	s	INDUCTOR CHIP 47NH
L403	1-410-369-11	s	INDUCTOR CHIP 1uH
L404	1-410-803-11	s	INDUCTOR CHIP 47NH
L405	1-410-803-11	s	INDUCTOR CHIP 47NH
L501-506	1-410-803-11	■	INDUCTOR CHIP 47NH
L508	1-410-733-11	s	INDUCTOR CHIP 0.22uH
L509-514	1-410-803-11	s	INDUCTOR CHIP 47NH
Q1	8-729-907-00	s	TRANSISTOR DTC114EU
Q3	8-729-028-91	s	TRANSISTOR DTA144EUA-T106
Q4	8-729-105-68	■	TRANSISTOR 2SC3356-K
Q5	8-729-117-32	s	TRANSISTOR 2SC4177
Q201	8-729-907-00	s	TRANSISTOR DTC114EU
Q203	8-729-028-91	s	TRANSISTOR DTA144EUA-T106
Q204	8-729-105-68	s	TRANSISTOR 2SC3356-K
Q205	8-729-117-32	s	TRANSISTOR 2SC4177
Q301	8-729-907-00	s	TRANSISTOR DTC114EU
Q303	8-729-028-91	s	TRANSISTOR DTA144EUA-T106

(IO-148 BOARD(ESBK-7032(UC/J/CE)))

Ref. No. or Q'ty	Part No.	SP	Description
Q304	8-729-105-68	s	TRANSISTOR 2SC3356-K
Q305	8-729-117-32	s	TRANSISTOR 2SC4177
Q401	8-729-907-00	s	TRANSISTOR DTC114EU
Q403	8-729-028-91	s	TRANSISTOR DTA144EUA-T106
Q404	8-729-105-68	s	TRANSISTOR 2SC3356-K
Q405	8-729-117-32	s	TRANSISTOR 2SC4177
Q406	8-729-105-68	s	TRANSISTOR 2SC3356-K
Q501	8-729-117-32	■	TRANSISTOR 2SC4177
Q502	8-729-028-91	s	TRANSISTOR DTA144EUA-T106
Q503	8-729-907-00	s	TRANSISTOR DTC114EU
R1	1-216-049-91	s	METAL, CHIP 1k 5% 1/10W
R2	1-216-623-11	s	METAL, CHIP 68 0.5% 1/10W
R3	1-216-073-00	s	METAL, CHIP 10k 5% 1/10W
R4	1-216-073-00	s	METAL, CHIP 10k 5% 1/10W
R5	1-216-635-11	s	METAL, CHIP 220 0.5% 1/10W
R6	1-216-611-11	s	METAL, CHIP 22 0.5% 1/10W
R7	1-216-624-11	s	METAL, CHIP 75 0.5% 1/10W
R11	1-216-049-91	s	METAL, CHIP 1k 5% 1/10W
R12	1-216-049-91	■	METAL, CHIP 1k 5% 1/10W
R13	1-216-631-11	s	METAL, CHIP 150 0.5% 1/10W
R15	1-216-049-91	s	METAL, CHIP 1k 5% 1/10W
R16	1-216-295-91	■	RES, CHIP 0
R17	1-216-619-11	■	METAL, CHIP 47 0.5% 1/10W
R18	1-216-033-00	s	METAL, CHIP 220 5% 1/10W
R19	1-216-025-91	s	METAL, CHIP 100 5% 1/10W
R20-31	1-216-049-91	s	METAL, CHIP 1k 5% 1/10W
R32-43	1-216-033-00	s	METAL, CHIP 220 ■ 1/10W
R45	1-216-295-91	s	RES, CHIP 0
R47	1-216-639-11	s	METAL, CHIP 330 0.5% 1/10W
R48	1-216-641-11	s	METAL, CHIP 390 0.5% 1/10W
R49	1-216-639-11	s	METAL, CHIP 330 0.5% 1/10W
R50	1-216-641-11	■	METAL, CHIP 390 0.5% 1/10W
R51	1-216-295-91	s	RES, CHIP 0
R52	1-216-295-91	s	RES, CHIP 0
R53	1-216-639-11	s	METAL, CHIP 330 0.5% 1/10W
R54	1-216-641-11	s	METAL, CHIP 390 0.5% 1/10W
R55	1-216-115-00	s	METAL, CHIP 560k 5% 1/10W
R56	1-216-115-00	s	METAL, CHIP 560k 5% 1/10W
R57	1-216-115-00	s	METAL, CHIP 560k 5% 1/10W
R58	1-216-115-00	s	METAL, CHIP 560k 5% 1/10W
R67	1-216-009-00	s	METAL, CHIP 22 5% 1/10W
R68	1-216-009-00	■	METAL, CHIP 22 5% 1/10W
R69	1-216-009-00	s	METAL, CHIP 22 5% 1/10W
R70	1-216-009-00	s	METAL, CHIP 22 5% 1/10W
R71-102	1-216-295-91	s	RES, CHIP 0
R106	1-216-639-11	s	METAL, CHIP 330 0.5% 1/10W
R107	1-216-641-11	s	METAL, CHIP 390 0.5% 1/10W
R201	1-216-049-91	s	METAL, CHIP 1k ■ 1/10W
R202	1-216-623-11	s	METAL, CHIP 68 0.5% 1/10W
R203	1-216-073-00	s	METAL, CHIP 10k 5% 1/10W
R204	1-216-073-00	s	METAL, CHIP 10k ■ 1/10W
R205	1-216-635-11	s	METAL, CHIP 220 0.5% 1/10W
R206	1-216-611-11	s	METAL, CHIP 22 0.5% 1/10W
R207	1-216-624-11	s	METAL, CHIP 75 0.5% 1/10W
R211	1-216-049-91	s	METAL, CHIP 1k 5% 1/10W
R212	1-216-049-91	s	METAL, CHIP 1k 5% 1/10W
R213	1-216-631-11	s	METAL, CHIP 150 0.5% 1/10W
R215	1-216-049-91	s	METAL, CHIP 1k 5% 1/10W
R216	1-216-295-91	s	RES, CHIP 0

(IO-148 BOARD(ESBK-7032(UC/J/CE)))

Ref. No. or Q'ty	Part No.	SP	Description
R217	1-216-619-11	s	METAL, CHIP 47 0.5% 1/10W
R218	1-216-025-91	s	METAL, CHIP 100 5% 1/10W
R219-230	1-216-049-91	s	METAL, CHIP 1k 5% 1/10W
R231-243	1-216-033-00	s	METAL, CHIP 220 5% 1/10W
R245	1-216-295-91	s	RES, CHIP 0
R246	1-216-639-11	s	METAL, CHIP 330 0.5% 1/10W
R247	1-216-641-11	s	METAL, CHIP 390 0.5% 1/10W
R248	1-216-639-11	s	METAL, CHIP 330 0.5% 1/10W
R249	1-216-641-11	s	METAL, CHIP 390 0.5% 1/10W
R250	1-216-295-91	s	RES, CHIP 0
R251	1-216-295-91	s	RES, CHIP 0
R252	1-216-639-11	s	METAL, CHIP 330 0.5% 1/10W
R253	1-216-641-11	s	METAL, CHIP 390 0.5% 1/10W
R254	1-216-115-00	s	METAL, CHIP 560k 5% 1/10W
R255	1-216-115-00	s	METAL, CHIP 560k 5% 1/10W
R256	1-216-115-00	s	METAL, CHIP 560k 5% 1/10W
R257	1-216-115-00	s	METAL, CHIP 560k 5% 1/10W
R266	1-216-009-00	s	METAL, CHIP 22 5% 1/10W
R267	1-216-009-00	s	METAL, CHIP 22 [illegible] 1/10W
R268	1-216-009-00	s	METAL, CHIP 22 5% 1/10W
R269	1-216-009-00	s	METAL, CHIP 22 5% 1/10W
R301	1-216-049-91	s	METAL, CHIP 1k 5% 1/10W
R302	1-216-623-11	s	METAL, CHIP 68 0.5% 1/10W
R303	1-216-073-00	s	METAL, CHIP 10k 5% 1/10W
R304	1-216-073-00	s	METAL, CHIP 10k 5% 1/10W
R305	1-216-635-11	s	METAL, CHIP 220 0.5% 1/10W
R306	1-216-611-11	s	METAL, CHIP 22 0.5% 1/10W
R307	1-216-624-11	s	METAL, CHIP 75 0.5% 1/10W
R311	1-216-049-91	s	METAL, CHIP 1k 5% 1/10W
R312	1-216-049-91	s	METAL, CHIP 1k 5% 1/10W
R313	1-216-631-11	s	METAL, CHIP 150 0.5% 1/10W
R315	1-216-049-91	s	METAL, CHIP 1k 5% 1/10W
R316	1-216-295-91	s	RES, CHIP 0
R317	1-216-619-11	s	METAL, CHIP 47 0.5% 1/10W
R318	1-216-025-91	s	METAL, CHIP 100 [illegible] 1/10W
R319-330	1-216-049-91	s	METAL, CHIP 1k 5% 1/10W
R331-343	1-216-033-00	s	METAL, CHIP 220 5% 1/10W
R345	1-216-295-91	s	RES, CHIP 0
R346	1-216-639-11	s	METAL, CHIP 330 0.5% 1/10W
R347	1-216-641-11	s	METAL, CHIP 390 0.5% 1/10W
R348	1-216-639-11	s	METAL, CHIP 330 0.5% 1/10W
R349	1-216-641-11	s	METAL, CHIP 390 0.5% 1/10W
R350	1-216-295-91	s	RES, CHIP 0
R351	1-216-295-91	s	RES, CHIP 0
R352	1-216-639-11	s	METAL, CHIP 330 0.5% 1/10W
R353	1-216-641-11	s	METAL, CHIP 390 0.5% 1/10W
R354	1-216-115-00	s	METAL, CHIP 560k 5% 1/10W
R355	1-216-115-00	s	METAL, CHIP 560k 5% 1/10W
R356	1-216-115-00	s	METAL, CHIP 560k [illegible] 1/10W
R357	1-216-115-00	s	METAL, CHIP 560k 5% 1/10W
R366	1-216-009-00	s	METAL, CHIP 22 5% 1/10W
R367	1-216-009-00	s	METAL, CHIP 22 5% 1/10W
R368	1-216-009-00	s	METAL, CHIP 22 5% 1/10W
R369	1-216-009-00	s	METAL, CHIP 22 5% 1/10W
R401	1-216-049-91	s	METAL, CHIP 1k 5% 1/10W
R402	1-216-623-11	s	METAL, CHIP 68 0.5% 1/10W
R403	1-216-073-00	s	METAL, CHIP 10k 5% 1/10W
R404	1-216-073-00	s	METAL, CHIP 10k 5% 1/10W
R405	1-216-635-11	s	METAL, CHIP 220 0.5% 1/10W

(IO-148 BOARD(ESBK-7032(UC/J/CE)))

Ref. No. or Q'ty	Part No.	SP	Description
R406	1-216-611-11	s	METAL, CHIP 22 0.5% 1/10W
R407	1-216-624-11	s	METAL, CHIP 75 0.5% 1/10W
R410	1-216-065-00	s	METAL, CHIP 4.7k 5% 1/10W
R411	1-216-049-91	s	METAL, CHIP 1k 5% 1/10W
R412	1-216-049-91	s	METAL, CHIP 1k 5% 1/10W
R413	1-216-631-11	s	METAL, CHIP 150 0.5% 1/10W
R415	1-216-049-91	s	METAL, CHIP 1k [illegible] 1/10W
R416	1-216-295-91	s	RES, CHIP 0
R417	1-216-619-11	s	METAL, CHIP 47 0.5% 1/10W
R418	1-216-025-91	s	METAL, CHIP 100 5% 1/10W
R419-431	1-216-049-91	s	METAL, CHIP 1k [illegible] 1/10W
R432-443	1-216-033-00	s	METAL, CHIP 220 [illegible] 1/10W
R445	1-216-295-91	s	RES, CHIP 0
R446	1-216-639-11	s	METAL, CHIP 330 0.5% 1/10W
R447	1-216-641-11	s	METAL, CHIP 390 0.5% 1/10W
R448	1-216-639-11	s	METAL, CHIP 330 0.5% 1/10W
R449	1-216-641-11	s	METAL, CHIP 390 0.5% 1/10W
R450	1-216-295-91	s	RES, CHIP 0
R451	1-216-295-91	s	RES, CHIP 0
R452	1-216-639-11	s	METAL, CHIP 330 0.5% 1/10W
R453	1-216-641-11	s	METAL, CHIP 390 0.5% 1/10W
R454	1-216-115-00	s	METAL, CHIP 560k 5% 1/10W
R455	1-216-115-00	s	METAL, CHIP 560k 5% 1/10W
R456	1-216-115-00	s	METAL, CHIP 560k 5% 1/10W
R457	1-216-115-00	s	METAL, CHIP 560k 5% 1/10W
R466	1-216-009-00	s	METAL, CHIP 22 [illegible] 1/10W
R467	1-216-009-00	s	METAL, CHIP 22 5% 1/10W
R468	1-216-009-00	s	METAL, CHIP 22 5% 1/10W
R469	1-216-009-00	s	METAL, CHIP 22 [illegible] 1/10W
R501	1-216-073-00	s	METAL, CHIP 10k 5% 1/10W
R502	1-216-073-00	s	METAL, CHIP 10k 5% 1/10W
R503	1-216-073-00	s	METAL, CHIP 10k 5% 1/10W
R504	1-216-639-11	s	METAL, CHIP 330 0.5% 1/10W
R505	1-216-641-11	s	METAL, CHIP 390 0.5% 1/10W
R506	1-216-639-11	s	METAL, CHIP 330 0.5% 1/10W
R507	1-216-641-11	s	METAL, CHIP 390 0.5% 1/10W
R508	1-216-039-00	s	METAL, CHIP 390 [illegible] 1/10W
R509	1-216-039-00	s	METAL, CHIP 390 [illegible] 1/10W
R510-520	1-216-295-91	s	RES, CHIP 0
R521	1-216-033-00	s	METAL, CHIP 220 5% 1/10W
R522	1-216-045-00	s	METAL, CHIP 680 5% 1/10W
R524	1-216-073-00	s	METAL, CHIP 10k 5% 1/10W
R525	1-216-049-91	s	METAL, CHIP 1k [illegible] 1/10W
R527	1-216-025-91	s	METAL, CHIP 100 [illegible] 1/10W
R528	1-216-295-91	s	RES, CHIP 0
R530	1-216-049-91	s	METAL, CHIP 1k 5% 1/10W
R531	1-216-049-91	s	METAL, CHIP 1k [illegible] 1/10W
R532	1-216-041-00	s	METAL, CHIP 470 5% 1/10W
R533	1-216-033-00	s	METAL, CHIP 220 [illegible] 1/10W
R534	1-216-033-00	s	METAL, CHIP 220 5% 1/10W
R535	1-216-073-00	s	METAL, CHIP 10k 5% 1/10W
R537	1-216-001-00	s	METAL, CHIP 10 5% 1/10W
R538	1-216-001-00	s	METAL, CHIP 10 5% 1/10W
R539	1-216-049-91	s	METAL, CHIP 1k 5% 1/10W
R540	1-216-029-00	s	METAL, CHIP 150 5% 1/10W
R541	1-216-022-00	s	METAL, CHIP 75 5% 1/10W
R542	1-216-041-00	s	METAL, CHIP 470 5% 1/10W
R543	1-216-041-00	s	METAL, CHIP 470 5% 1/10W
R544	1-216-073-00	s	METAL, CHIP 10k 5% 1/10W

(IO-148 BOARD(ESBK-7032(UC/J/CE)))

Ref. No. or Q'ty	Part No.	SP	Description
R545	1-216-029-00	s	METAL, CHIP 150 5% 1/10W
R546	1-216-073-00	s	METAL, CHIP 10k 5% 1/10W
R547	1-216-073-00	s	METAL, CHIP 10k 5% 1/10W
R601	1-216-295-91	s	RES, CHIP 0
R602	1-216-295-91	■	RES, CHIP 0
R610	1-216-295-91	s	RES, CHIP 0
R611	1-216-067-00	■	METAL, CHIP 5.6k 5% 1/10W
R612-626	1-216-295-91	s	RES, CHIP 0
R627	1-216-639-11	s	METAL, CHIP 330 0.5% 1/10W
R628	1-216-641-11	s	METAL, CHIP 390 0.5% 1/10W
R629-635	1-216-295-91	s	RES, CHIP 0
R640	1-216-295-91	s	RES, CHIP 0
R653	1-216-295-91	s	RES, CHIP 0
R654	1-216-295-91	■	RES, CHIP 0
R655	1-216-037-00	s	METAL, CHIP 330 5% 1/10W
R656-661	1-216-295-91	s	RES, CHIP 0
R662	1-216-041-00	s	METAL, CHIP 470 5% 1/10W
R663	1-216-041-00	s	METAL, CHIP 470 5% 1/10W
R664	1-216-049-91	s	METAL, CHIP 1k 5% 1/10W
R665	1-216-639-11	s	METAL, CHIP 330 0.5% 1/10W
R666	1-216-639-11	■	METAL, CHIP 330 0.5% 1/10W
R801	1-216-073-00	s	METAL, CHIP 10k 5% 1/10W
R802-807	1-216-295-91	s	RES, CHIP ■
R808	1-216-073-00	s	METAL, CHIP 10k 5% 1/10W
R811	1-216-049-91	s	METAL, CHIP 1k ■ 1/10W
R812	1-216-073-00	s	METAL, CHIP 10k 5% 1/10W
R828	1-216-295-91	s	RES, CHIP 0
R829	1-216-295-91	s	RES, CHIP 0
R830	1-216-295-91	s	RES, CHIP 0
R832	1-216-295-91	s	RES, CHIP 0
RB1	1-239-303-11	■	RESISTOR BLOCK, CHIP 1kx8
RB3	1-239-306-11	s	RESISTOR BLOCK, CHIP 10kx8
RB4	1-239-306-11	s	RESISTOR BLOCK, CHIP 10kx8
RB203	1-239-306-11	s	RESISTOR BLOCK, CHIP 10kx8
RB204	1-239-306-11	s	RESISTOR BLOCK, CHIP 10kx8
RB301	1-239-303-11	s	RESISTOR BLOCK, CHIP 1kx8
RB303	1-239-306-11	s	RESISTOR BLOCK, CHIP 10kx8
RB304	1-239-306-11	■	RESISTOR BLOCK, CHIP 10kx8
RB403	1-239-306-11	s	RESISTOR BLOCK, CHIP 10kx8
RB404	1-239-306-11	s	RESISTOR BLOCK, CHIP 10kx8
RB601	1-239-306-11	s	RESISTOR BLOCK, CHIP 10kx8
RB701	1-239-306-11	s	RESISTOR BLOCK, CHIP 10kx8
RB801-807	1-239-306-11	s	RESISTOR BLOCK, CHIP 10kx8
RB808	1-239-303-11	s	RESISTOR BLOCK, CHIP 1kx8
RB901	1-239-306-11	s	RESISTOR BLOCK, CHIP 10kx8
RB902	1-239-306-11	s	RESISTOR BLOCK, CHIP 10kx8
RB903	1-239-306-11	s	RESISTOR BLOCK, CHIP 10kx8
RB904	1-239-306-11	s	RESISTOR BLOCK, CHIP 10kx8
RV11	1-241-263-11	s	RES, ADJ, METAL 5k
RV201	1-241-263-11	s	RES, ADJ, METAL 5k
RV301	1-241-263-11	s	RES, ADJ, METAL 5k
RV401	1-241-263-11	s	RES, ADJ, METAL 5k
RV501	1-241-263-11	s	RES, ADJ, METAL 5k
S803	1-570-623-11	s	SWITCH, DIP 8-CKT
S804	1-570-623-11	s	SWITCH, DIP 8-CKT
X601	1-760-275-11	s	VCO, CRYSTAL 27.00MHz

LE-154 BOARD(ES-7(UC/J/CE))

Ref. No. or Q'ty	Part No.	SP	Description

Refer to the service manual of the ES-7.

MB-639 BOARD(ES-7(UC/J/CE))

Ref. No. or Q'ty	Part No.	SP	Description

Refer to the service manual of the ES-7.

MPU-95 BOARD(ESBK-7041(UC/J/CE))

Ref. No. or Q'ty	Part No.	SP	Description
1pc	A-8311-015-A	o	MOUNTED CIRCUIT BOARD, MPU-95
1pc	3-603-856-02	o	PLATE,MPU CN
1pc	3-696-948-11	s	PRECISION SCREW(+P2.5x6)
1pc	7-682-947-01	s	SCREW +PSW 3x6
1pc	7-682-948-01	s	SCREW +PSW 3x8
1pc	7-685-862-09	s	SCREW +BVTT 2.6x6 (S)
1pc	1-528-749-11	■	BATTERY, MOLD TYPE
8pcs	3-696-947-11	■	SCREW(+B2.5)
C1	1-126-396-11	s	ELECT, CHIP 47uF 20% 16V
C2	1-163-038-91	s	CERAMIC, CHIP 0.1uF 25V
C3	1-126-396-11	s	ELECT, CHIP 47uF 20% 16V
C4	1-163-038-91	■	CERAMIC, CHIP 0.1uF 25V
C5	1-126-396-11	■	ELECT, CHIP 47uF 20% 16V
C6	1-126-396-11	s	ELECT, CHIP 47uF 20% 16V
C101-105	1-126-401-11	s	ELECT, CHIP 1uF 20% 50V
C108	1-163-038-91	s	CERAMIC, CHIP 0.1uF 25V
C109	1-126-401-11	s	ELECT, CHIP 1uF 20% 50V
C110	1-163-038-91	s	CERAMIC, CHIP 0.1uF 25V
C111	1-163-038-91	s	CERAMIC, CHIP 0.1uF 25V
C112	1-163-038-91	s	CERAMIC, CHIP 0.1uF 25V
C113	1-163-038-91	s	CERAMIC, CHIP 0.1uF 25V
C114	1-126-396-11	■	ELECT, CHIP 47uF 20% 16V
C115-123	1-163-038-91	s	CERAMIC, CHIP 0.1uF 25V
C124	1-126-396-11	■	ELECT, CHIP 47uF 20% 16V
C125	1-163-038-91	s	CERAMIC, CHIP 0.1uF 25V
C126	1-126-396-11	s	ELECT, CHIP 47uF 20% 16V
C127	1-163-038-91	s	CERAMIC, CHIP 0.1uF 25V
C128	1-126-396-11	s	ELECT, CHIP 47uF 20% 16V
C129	1-163-038-91	s	CERAMIC, CHIP 0.1uF 25V
C130	1-126-396-11	s	ELECT, CHIP 47uF 20% 16V
C131-142	1-163-038-91	s	CERAMIC, CHIP 0.1uF 25V
C147	1-163-038-91	s	CERAMIC, CHIP 0.1uF 25V
C148	1-163-038-91	■	CERAMIC, CHIP 0.1uF 25V
C203	1-163-038-91	s	CERAMIC, CHIP 0.1uF 25V
C204	1-163-038-91	s	CERAMIC, CHIP 0.1uF 25V
C205	1-163-038-91	s	CERAMIC, CHIP 0.1uF 25V
C206	1-163-038-91	s	CERAMIC, CHIP 0.1uF 25V
C207	1-126-396-11	s	ELECT, CHIP 47uF 20% 16V
C208-229	1-163-038-91	s	CERAMIC, CHIP 0.1uF 25V
C303	1-163-038-91	s	CERAMIC, CHIP 0.1uF 25V
C304	1-163-038-91	s	CERAMIC, CHIP 0.1uF 25V
C305	1-163-038-91	s	CERAMIC, CHIP 0.1uF 25V
C306	1-163-038-91	s	CERAMIC, CHIP 0.1uF 25V
C307	1-126-396-11	s	ELECT, CHIP 47uF 20% 16V
C308-317	1-163-038-91	s	CERAMIC, CHIP 0.1uF 25V
C318	1-126-394-11	■	ELECT, CHIP 10uF 20% 16V
C319	1-163-038-91	s	CERAMIC, CHIP 0.1uF 25V
C320	1-126-394-11	■	ELECT, CHIP 10uF 20% 16V
C321-329	1-163-038-91	s	CERAMIC, CHIP 0.1uF 25V
C330	1-163-037-11	s	CERAMIC, CHIP 0.022uF 10% 25V
C331	1-163-038-91	s	CERAMIC, CHIP 0.1uF 25V
C332	1-163-038-91	s	CERAMIC, CHIP 0.1uF 25V
C401	1-163-038-91	s	CERAMIC, CHIP 0.1uF 25V
C402	1-126-394-11	s	ELECT, CHIP 10uF 20% 16V
C403	1-163-038-91	s	CERAMIC, CHIP 0.1uF 25V
C404	1-163-038-91	s	CERAMIC, CHIP 0.1uF 25V
C405	1-163-038-91	s	CERAMIC, CHIP 0.1uF 25V
C406	1-126-396-11	s	ELECT, CHIP 47uF 20% 16V

(MPU-95 BOARD(ESBK-7041(UC/J/CE)))

Ref. No. or Q'ty	Part No.	SP	Description
C407	1-126-396-11	s	ELECT, CHIP 47uF 20% 16V
C408-416	1-163-038-91	s	CERAMIC, CHIP 0.1uF 25V
C417	1-126-396-11	s	ELECT, CHIP 47uF 20% 16V
C418	1-126-396-11	s	ELECT, CHIP 47uF 20% 16V
C419	1-163-038-91	s	CERAMIC, CHIP 0.1uF 25V
C420	1-126-396-11	s	ELECT, CHIP 47uF 20% 16V
C501	1-163-038-91	■	CERAMIC, CHIP 0.1uF 25V
C502	1-126-394-11	■	ELECT, CHIP 10uF 20% 16V
C503	1-163-038-91	■	CERAMIC, CHIP 0.1uF 25V
C504	1-163-038-91	s	CERAMIC, CHIP 0.1uF 25V
C505	1-163-038-91	■	CERAMIC, CHIP 0.1uF 25V
C506	1-126-396-11	s	ELECT, CHIP 47uF 20% 16V
C507	1-126-396-11	■	ELECT, CHIP 47uF 20% 16V
C508-513	1-163-038-91	s	CERAMIC, CHIP 0.1uF 25V
C514	1-126-396-11	s	ELECT, CHIP 47uF 20% 16V
C515	1-126-396-11	■	ELECT, CHIP 47uF 20% 16V
C516	1-163-038-91	s	CERAMIC, CHIP 0.1uF 25V
C517	1-126-396-11	s	ELECT, CHIP 47uF 20% 16V
C601	1-163-038-91	s	CERAMIC, CHIP 0.1uF 25V
C602	1-126-394-11	s	ELECT, CHIP 10uF 20% 16V
C603	1-163-038-91	s	CERAMIC, CHIP 0.1uF 25V
C604	1-163-038-91	s	CERAMIC, CHIP 0.1uF 25V
C605	1-163-038-91	s	CERAMIC, CHIP 0.1uF 25V
C606	1-126-396-11	■	ELECT, CHIP 47uF 20% 16V
C607	1-126-396-11	■	ELECT, CHIP 47uF 20% 16V
C608-613	1-163-038-91	■	CERAMIC, CHIP 0.1uF 25V
C614	1-126-396-11	s	ELECT, CHIP 47uF 20% 16V
C615	1-126-396-11	s	ELECT, CHIP 47uF 20% 16V
C616	1-163-038-91	s	CERAMIC, CHIP 0.1uF 25V
C617	1-163-038-91	■	CERAMIC, CHIP 0.1uF 25V
C618	1-163-038-91	■	CERAMIC, CHIP 0.1uF 25V
C619	1-126-396-11	s	ELECT, CHIP 47uF 20% 16V
C701	1-126-394-11	s	ELECT, CHIP 10uF 20% 16V
C702	1-126-394-11	s	ELECT, CHIP 10uF 20% 16V
C703	1-163-038-91	s	CERAMIC, CHIP 0.1uF 25V
C704	1-163-038-91	s	CERAMIC, CHIP 0.1uF 25V
C705	1-163-038-91	s	CERAMIC, CHIP 0.1uF 25V
C706	1-163-038-91	s	CERAMIC, CHIP 0.1uF 25V
C707	1-126-394-11	s	ELECT, CHIP 10uF 20% 16V
C708	1-163-038-91	s	CERAMIC, CHIP 0.1uF 25V
C709	1-126-396-11	■	ELECT, CHIP 47uF 20% 16V
C710	1-163-038-91	s	CERAMIC, CHIP 0.1uF 25V
C711	1-163-038-91	s	CERAMIC, CHIP 0.1uF 25V
C712	1-126-396-11	s	ELECT, CHIP 47uF 20% 16V
C713-720	1-163-038-91	s	CERAMIC, CHIP 0.1uF 25V
C721	1-126-396-11	s	ELECT, CHIP 47uF 20% 16V
C722	1-126-396-11	s	ELECT, CHIP 47uF 20% 16V
C723-729	1-163-038-91	s	CERAMIC, CHIP 0.1uF 25V
C730	1-126-396-11	s	ELECT, CHIP 47uF 20% 16V
C901	1-163-038-91	s	CERAMIC, CHIP 0.1uF 25V
C902	1-126-394-11	s	ELECT, CHIP 10uF 20% 16V
C903-909	1-163-038-91	s	CERAMIC, CHIP 0.1uF 25V
C910	1-126-396-11	s	ELECT, CHIP 47uF 20% 16V
C911	1-126-396-11	s	ELECT, CHIP 47uF 20% 16V
C912	1-163-038-91	s	CERAMIC, CHIP 0.1uF 25V
C913	1-163-038-91	s	CERAMIC, CHIP 0.1uF 25V
CN111	1-564-004-11	■	CONNECTOR 5P, MALE
CN112	1-564-002-11	s	CONNECTOR 3P, MALE

(MPU-95 BOARD(ESBK-7041(UC/J/CE)))

Ref. No. or Q'ty	Part No.	SP	Description
CN201	1-778-261-11	o	CONNECTOR, BB 124P, MALE
CN202	1-778-261-11	o	CONNECTOR, BB 124P, MALE
CN203	1-778-261-11	o	CONNECTOR, BB 124P, MALE
CN211	1-506-470-11	s	CONNECTOR 5P, MALE
CN212	1-506-468-11	s	CONNECTOR 3P, MALE
CN213	1-506-471-11	s	CONNECTOR 6P, MALE
CN311	1-506-470-11	s	CONNECTOR 5P, MALE
CN401	1-770-231-11	o	CONNECTOR, D-HALF 50P, MALE
CN501	1-770-231-11	o	CONNECTOR, D-HALF 50P, MALE
CN601	1-770-231-11	o	CONNECTOR, D-HALF 50P, MALE
CN701	1-770-231-11	o	CONNECTOR, D-HALF 50P, MALE
CNI111	1-526-660-21	o	SOCKET, IC 32P
CNI208	1-526-660-21	■	SOCKET, IC 32P
CNI209	1-526-660-21	o	SOCKET, IC 32P
CNI303	1-526-660-21	o	SOCKET, IC 32P
CNI304	1-526-660-21	o	SOCKET, IC 32P
CNI314	1-540-069-11	■	SOCKET, IC (IC113) 84P
D101-108	8-719-026-16	s	DIODE CL-150D-CD
D201	8-719-026-16	s	DIODE CL-150D-CD
D202	8-719-026-16	s	DIODE CL-150D-CD
D203	8-719-026-16	■	DIODE CL-150D-CD
D301-308	8-719-026-16	■	DIODE CL-150D-CD
F1	⚠ 1-576-260-51	s	FUSE 10A 125V
FB201-226	1-500-202-11	s	BEAD, FERRITE
FB301	1-500-202-11	s	BEAD, FERRITE
FB302	1-500-202-11	■	BEAD, FERRITE
FB303	1-500-202-11	s	BEAD, FERRITE
FB304	1-500-202-11	s	BEAD, FERRITE
FB401	1-500-202-11	s	BEAD, FERRITE
FB501	1-500-202-11	s	BEAD, FERRITE
FB601	1-500-202-11	s	BEAD, FERRITE
FB701	1-500-202-11	s	BEAD, FERRITE
FB702	1-500-202-11	s	BEAD, FERRITE
FB703	1-500-202-11	s	BEAD, FERRITE
FL301-306	1-239-719-11	s	FILTER, NOISE, CHIP
FL401-418	1-239-719-11	s	FILTER, NOISE, CHIP
FL501-518	1-239-719-11	s	FILTER, NOISE, CHIP
FL601-618	1-239-719-11	s	FILTER, NOISE, CHIP
FL701-737	1-239-719-11	s	FILTER, NOISE, CHIP
IC101	8-759-296-67	s	IC HD6417032F20
IC103	8-759-043-33	s	IC LB1721M
IC104	8-759-369-92	s	IC M51958AFP600D
IC105	8-759-081-44	s	IC TC74VHC04F
IC106	8-759-186-38	s	IC TC74VHC32F
IC107	8-759-521-15	s	IC MAX232CWE
IC108	8-759-186-47	■	IC TC74VHC138F
IC109	8-759-186-47	s	IC TC74VHC138F
IC110	8-759-186-49	s	IC TC74VHC139F

(MPU-95 BOARD(ESBK-7041(UC/J/CE)))

Ref. No. or Q'ty	Part No.	SP	Description
IC112	8-759-372-59	s	IC AM29F200B-75EC
IC113	8-759-372-59	s	IC AM29F200B-75EC
IC114	8-759-296-24	s	IC CY7C199-20VC
IC115	8-759-296-24	s	IC CY7C199-20VC
IC116	8-759-175-29	s	IC TC74VHC374F
IC117	8-759-186-49	s	IC TC74VHC139F
IC118	8-759-341-64	s	IC UPD4218160LE-60
IC118	8-759-380-51	s	IC TMS418160-60DZ
IC119	8-759-341-64	s	IC UPD4218160LE-60
IC119	8-759-380-51	s	IC TMS418160-60DZ
IC122	8-759-081-44	■	IC TC74VHC04F
IC123	8-759-186-39	s	IC TC74VHC74F
IC124	8-759-186-77	s	IC TC74VHC541F
IC125	8-759-186-77	s	IC TC74VHC541F
IC126	8-759-186-63	s	IC TC74VHC245F
IC127	8-759-186-63	s	IC TC74VHC245F
IC128	8-759-399-65	s	IC M48Z58Y-70MH1TR
IC129	8-759-095-41	s	IC CXD8176AQ
IC130	8-759-053-58	s	IC IDT6116SA25SO
IC131	8-759-081-48	s	IC TC74VHC08F
IC201	8-759-371-00	s	IC HD6437021C02X
IC202	8-759-061-67	s	IC MC34051M
IC204	8-759-300-71	s	IC HD14053BFP
IC205	8-759-043-33	s	IC LB1721M
IC206	8-759-925-76	s	IC SN74HC08ANS
IC207	8-759-186-47	s	IC TC74VHC138F
IC210	8-759-296-24	■	IC CY7C199-20VC
IC211	8-759-296-24	s	IC CY7C199-20VC
IC212	8-759-186-77	s	IC TC74VHC541F
IC213	8-759-186-77	s	IC TC74VHC541F
IC214	8-759-186-77	s	IC TC74VHC541F
IC215	8-759-186-63	s	IC TC74VHC245F
IC216	8-759-186-63	s	IC TC74VHC245F
IC217	8-759-186-29	s	IC TC74VHC11F
IC218	8-759-095-41	s	IC CXD8176AQ
IC219	8-759-053-58	s	IC IDT6116SA25SO
IC220	8-759-939-92	s	IC SN74ALS541NS
IC221	8-759-939-92	■	IC SN74ALS541NS
IC222	8-759-947-45	s	IC SN74ALS245ANS
IC223	8-759-933-99	s	IC SN74ALS09NS
IC224	8-759-175-29	s	IC TC74VHC374F
IC301	8-759-371-00	s	IC HD6437021C02X
IC302	8-759-043-33	s	IC LB1721M
IC305	8-759-254-78	s	IC CY7C185-25VCTEL
IC306	8-759-254-78	s	IC CY7C185-25VCTEL
IC307	8-759-186-77	■	IC TC74VHC541F
IC308	8-759-186-77	s	IC TC74VHC541F
IC309	8-759-186-63	s	IC TC74VHC245F
IC310	8-759-095-41	s	IC CXD8176AQ
IC311	8-759-053-58	s	IC IDT6116SA25SO
IC312	8-759-934-41	s	IC SN74ALS240ANS
IC313	8-759-934-41	s	IC SN74ALS240ANS
IC315	8-759-186-63	s	IC TC74VHC245F
IC316	8-759-186-63	s	IC TC74VHC245F
IC317	8-759-053-58	s	IC IDT6116SA25SO
IC318	8-759-053-58	s	IC IDT6116SA25SO
IC319	8-759-515-09	s	IC SN74ALS374ANS
IC320	8-759-515-09	s	IC SN74ALS374ANS
IC321	8-759-515-09	■	IC SN74ALS374ANS

(MPU-95 BOARD(ESBK-7041(UC/J/CE)))

Ref. No. or Q'ty	Part No.	SP	Description
IC322	8-759-515-09	■	IC SN74ALS374ANS
IC323	8-759-359-54	s	IC SN74ALS244CNS-E20
IC324	8-759-239-55	s	IC TC74HC123AF
IC401	8-759-347-01	s	IC TK11230AMTL
IC403	8-759-341-64	s	IC UPD4218160LE-60
IC403	8-759-380-51	s	IC TMS418160-60DZ
IC404	8-759-341-64	s	IC UPD4218160LE-60
IC404	8-759-380-51	■	IC TMS418160-60DZ
IC405	8-759-368-65	s	IC SYM53CF96-2
IC406	8-749-010-87	s	HIC BP3510
IC407	8-759-947-45	s	IC SN74ALS245ANS
IC408	8-759-947-45	s	IC SN74ALS245ANS
IC409	8-759-359-54	s	IC SN74ALS244CNS-E20
IC501	8-759-347-01	s	IC TK11230AMTL
IC503	8-759-341-64	s	IC UPD4218160LE-60
IC503	8-759-380-51	s	IC TMS418160-60DZ
IC504	8-759-341-64	s	IC UPD4218160LE-60
IC504	8-759-380-51	s	IC TMS418160-60DZ
IC505	8-759-368-65	■	IC SYM53CF96-2
IC506	8-749-010-87	s	HIC BP3510
IC601	8-759-347-01	s	IC TK11230AMTL
IC603	8-759-341-64	s	IC UPD4218160LE-60
IC603	8-759-380-51	s	IC TMS418160-60DZ
IC604	8-759-341-64	s	IC UPD4218160LE-60
IC604	8-759-380-51	s	IC TMS418160-60DZ
IC605	8-759-368-65	s	IC SYM53CF96-2
IC606	8-749-010-87	■	HIC BP3510
IC701	8-759-347-01	■	IC TK11230AMTL
IC703	8-759-341-64	s	IC UPD4218160LE-60
IC703	8-759-380-51	s	IC TMS418160-60DZ
IC704	8-759-341-64	s	IC UPD4218160LE-60
IC704	8-759-380-51	s	IC TMS418160-60DZ
IC705	8-759-368-65	s	IC SYM53CF96-2
IC706	8-749-010-87	s	HIC BP3510
IC710	8-759-515-09	s	IC SN74ALS374ANS
IC711	8-759-081-44	s	IC TC74VHC04F
IC712	8-759-186-39	s	IC TC74VHC74F
IC713	8-759-033-02	s	IC MC74F04M
IC714	8-759-033-02	s	IC MC74F04M
IC901	8-759-347-01	s	IC TK11230AMTL
IC903	8-759-371-04	■	IC HM514260CJ7-Z
IC904	8-759-371-04	s	IC HM514260CJ7-Z
IC908	8-759-934-29	s	IC SN74ALS153NS
L1	1-412-520-11	■	INDUCTOR 3.9uH
L2	1-412-520-11	■	INDUCTOR 3.9uH
L3	1-412-520-11	■	INDUCTOR 3.9uH
L4	1-412-520-11	s	INDUCTOR 3.9uH
L401	1-410-381-11	s	INDUCTOR, CHIP 10uH
L402	1-410-381-11	s	INDUCTOR, CHIP 10uH
L501	1-410-381-11	s	INDUCTOR, CHIP 10uH
L502	1-410-381-11	s	INDUCTOR, CHIP 10uH
L601	1-410-381-11	s	INDUCTOR, CHIP 10uH
L602	1-410-381-11	■	INDUCTOR, CHIP 10uH
L701	1-410-381-11	s	INDUCTOR, CHIP 10uH
L702	1-410-381-11	s	INDUCTOR, CHIP 10uH
L901	1-410-381-11	■	INDUCTOR, CHIP 10uH
Q401	8-729-111-13	s	TRANSISTOR 2SA1385-Z-M
Q402	8-729-216-22	s	TRANSISTOR 2SA1162

(MPU-95 BOARD(ESBK-7041(UC/J/CE)))

Ref. No. or Q'ty	Part No.	SP	Description
Q501	8-729-111-13	s	TRANSISTOR 2SA1385-Z-M
Q502	8-729-216-22	s	TRANSISTOR 2SA1162
Q601	8-729-111-13	s	TRANSISTOR 2SA1385-Z-M
Q602	8-729-216-22	s	TRANSISTOR 2SA1162
Q701	8-729-111-13	s	TRANSISTOR 2SA1385-Z-M
Q702	8-729-216-22	s	TRANSISTOR 2SA1162
R101	1-216-089-91	s	METAL, CHIP 47k 5% 1/10W
R102	1-216-089-91	s	METAL, CHIP 47k 5% 1/10W
R103-110	1-216-045-00	s	METAL, CHIP 680 5% 1/10W
R111	1-216-295-91	s	RES, CHIP 0
R113	1-216-295-91	s	RES, CHIP 0
R115	1-216-049-91	s	METAL, CHIP 1k 5% 1/10W
R116	1-216-089-91	s	METAL, CHIP 47k 5% 1/10W
R117	1-216-065-00	s	METAL, CHIP 4.7k [illegible] 1/10W
R118	1-216-085-00	s	METAL, CHIP 33k 5% 1/10W
R119	1-216-089-91	■	METAL, CHIP 47k 5% 1/10W
R120	1-216-077-00	s	METAL, CHIP 15k 5% 1/10W
R121	1-216-089-91	s	METAL, CHIP 47k 5% 1/10W
R122	1-216-089-91	s	METAL, CHIP 47k [illegible] 1/10W
R132	1-216-089-91	s	METAL, CHIP 47k 5% 1/10W
R133	1-216-089-91	s	METAL, CHIP 47k [illegible] 1/10W
R201	1-216-097-91	■	METAL, CHIP 100k 5% 1/10W
R202	1-216-089-91	■	METAL, CHIP 47k 5% 1/10W
R203	1-216-089-91	s	METAL, CHIP 47k [illegible] 1/10W
R204	1-216-077-00	s	METAL, CHIP 15k 5% 1/10W
R205	1-216-077-00	■	METAL, CHIP 15k 5% 1/10W
R206	1-216-097-91	s	METAL, CHIP 100k 5% 1/10W
R207	1-216-089-91	s	METAL, CHIP 47k 5% 1/10W
R208	1-216-045-00	s	METAL, CHIP 680 5% 1/10W
R209	1-216-045-00	s	METAL, CHIP 680 [illegible] 1/10W
R210	1-216-045-00	s	METAL, CHIP 680 [illegible] 1/10W
R211	1-216-295-91	■	RES, CHIP 0
R212	1-216-295-91	■	RES, CHIP 0
R213	1-216-295-91	s	RES, CHIP 0
R214	1-216-295-91	■	RES, CHIP 0
R215	1-216-049-91	s	METAL, CHIP 1k 5% 1/10W
R216	1-216-089-91	■	METAL, CHIP 47k [illegible] 1/10W
R217	1-216-089-91	■	METAL, CHIP 47k 5% 1/10W
R218	1-216-089-91	s	METAL, CHIP 47k 5% 1/10W
R219	1-216-049-91	s	METAL, CHIP 1k 5% 1/10W
R220-225	1-216-089-91	■	METAL, CHIP 47k [illegible] 1/10W
R226	1-216-049-91	s	METAL, CHIP 1k [illegible] 1/10W
R301-305	1-216-089-91	■	METAL, CHIP 47k 5% 1/10W
R306-313	1-216-045-00	s	METAL, CHIP 680 5% 1/10W
R314	1-216-295-91	s	RES, CHIP 0
R315	1-216-295-91	■	RES, CHIP 0
R317	1-216-295-91	s	RES, CHIP 0
R318	1-216-049-91	s	METAL, CHIP 1k 5% 1/10W
R319-327	1-216-089-91	s	METAL, CHIP 47k [illegible] 1/10W
R333-339	1-216-009-00	s	METAL, CHIP 22 5% 1/10W
R340	1-216-089-91	s	METAL, CHIP 47k [illegible] 1/10W
R341	1-216-049-91	s	METAL, CHIP 1k 5% 1/10W
R342	1-216-049-91	s	METAL, CHIP 1k [illegible] 1/10W
R343	1-216-009-00	s	METAL, CHIP 22 5% 1/10W
R344	1-216-295-91	s	RES, CHIP 0
R345	1-216-295-91	s	RES, CHIP 0
R401	1-216-295-91	s	RES, CHIP 0
R402	1-216-295-91	s	RES, CHIP 0

(MPU-95 BOARD(ESBK-7041(UC/J/CE)))

Ref. No. or Q'ty	Part No.	SP	Description
R403	1-216-065-00	s	METAL, CHIP 4.7k 5% 1/10W
R404	1-216-065-00	■	METAL, CHIP 4.7k 5% 1/10W
R405	1-216-065-00	s	METAL, CHIP 4.7k 5% 1/10W
R407	1-216-037-00	s	METAL, CHIP 330 5% 1/10W
R409	1-216-039-00	s	METAL, CHIP 390 5% 1/10W
R410	1-216-073-00	s	METAL, CHIP 10k 5% 1/10W
R411	1-216-073-00	s	METAL, CHIP 10k 5% 1/10W
R414	1-216-073-00	s	METAL, CHIP 10k 5% 1/10W
R415	1-216-073-00	s	METAL, CHIP 10k 5% 1/10W
R416	1-216-365-00	s	METAL 0.47 5% 2W
R417	1-216-075-00	s	METAL, CHIP 12k 5% 1/10W
R418	1-216-689-11	s	METAL, CHIP 39k 0.5% 1/10W
R419	1-216-037-00	s	METAL, CHIP 330 5% 1/10W
R420	1-216-009-00	■	METAL, CHIP 22 5% 1/10W
R501	1-216-295-91	s	RES, CHIP 0
R502	1-216-295-91	s	RES, CHIP 0
R503	1-216-065-00	s	METAL, CHIP 4.7k 5% 1/10W
R504	1-216-065-00	s	METAL, CHIP 4.7k 5% 1/10W
R505	1-216-065-00	s	METAL, CHIP 4.7k 5% 1/10W
R506	1-216-073-00	s	METAL, CHIP 10k 5% 1/10W
R507	1-216-073-00	s	METAL, CHIP 10k 5% 1/10W
R512	1-216-037-00	s	METAL, CHIP 330 5% 1/10W
R513	1-216-039-00	■	METAL, CHIP 390 5% 1/10W
R516	1-216-365-00	s	METAL 0.47 5% 2W
R517	1-216-075-00	s	METAL, CHIP 12k 5% 1/10W
R518	1-216-689-11	s	METAL, CHIP 39k 0.5% 1/10W
R519	1-216-037-00	s	METAL, CHIP 330 5% 1/10W
R601	1-216-295-91	s	RES, CHIP 0
R602	1-216-295-91	s	RES, CHIP 0
R603	1-216-065-00	s	METAL, CHIP 4.7k 5% 1/10W
R604	1-216-065-00	s	METAL, CHIP 4.7k 5% 1/10W
R605	1-216-065-00	s	METAL, CHIP 4.7k 5% 1/10W
R606	1-216-073-00	s	METAL, CHIP 10k [illegible] 1/10W
R607	1-216-073-00	s	METAL, CHIP 10k 5% 1/10W
R608	1-216-037-00	s	METAL, CHIP 330 5% 1/10W
R609	1-216-039-00	s	METAL, CHIP 390 5% 1/10W
R616	1-216-365-00	s	METAL 0.47 5% 2W
R617	1-216-075-00	■	METAL, CHIP 12k 5% 1/10W
R618	1-216-689-11	■	METAL, CHIP 39k 0.5% 1/10W
R619	1-216-037-00	s	METAL, CHIP 330 [illegible] 1/10W
R716	1-216-365-00	s	METAL 0.47 5% 2W
R717	1-216-075-00	s	METAL, CHIP 12k [illegible] 1/10W
R718	1-216-689-11	s	METAL, CHIP 39k 0.5% 1/10W
R719	1-216-037-00	s	METAL, CHIP 330 5% 1/10W
R765	1-216-009-00	s	METAL, CHIP 22 [illegible] 1/10W
R766	1-216-009-00	s	METAL, CHIP 22 5% 1/10W
R799	1-216-009-00	s	METAL, CHIP 22 5% 1/10W
R800	1-216-009-00	■	METAL, CHIP 22 5% 1/10W
R801	1-216-295-91	s	RES, CHIP 0
R808	1-216-065-00	s	METAL, CHIP 4.7k 5% 1/10W
R809	1-216-065-00	s	METAL, CHIP 4.7k 5% 1/10W
R810	1-216-065-00	s	METAL, CHIP 4.7k 5% 1/10W
R811	1-216-073-00	s	METAL, CHIP 10k 5% 1/10W
R812	1-216-073-00	s	METAL, CHIP 10k 5% 1/10W
R813	1-216-009-00	s	METAL, CHIP 22 [illegible] 1/10W
R814	1-216-013-00	s	METAL, CHIP 33 [illegible] 1/10W
R817	1-216-009-00	s	METAL, CHIP 22 [illegible] 1/10W
R819	1-216-009-00	s	METAL, CHIP 22 5% 1/10W
R821-825	1-216-009-00	s	METAL, CHIP 22 5% 1/10W

(MPU-95 BOARD(ESBK-7041(UC/J/CE)))

Ref. No. or Q'ty	Part No.	SP	Description
R826	1-216-037-00	s	METAL, CHIP 330 [illegible] 1/10W
R827	1-216-039-00	s	METAL, CHIP 390 5% 1/10W
R901	1-216-295-91	s	RES, CHIP 0
R902	1-216-295-91	s	RES, CHIP 0
R903	1-216-065-00	s	METAL, CHIP 4.7k 5% 1/10W
R904	1-216-065-00	s	METAL, CHIP 4.7k 5% 1/10W
R905	1-216-065-00	s	METAL, CHIP 4.7k 5% 1/10W
R906	1-216-089-91	s	METAL, CHIP 47k 5% 1/10W
R907	1-216-073-00	s	METAL, CHIP 10k [illegible] 1/10W
R908	1-216-295-91	s	RES, CHIP 0
RB101	1-239-308-11	s	RESISTOR BLOCK, CHIP 47kx8
RB102-107	1-239-305-11	s	RESISTOR BLOCK, CHIP 4.7kx8
RB108	1-239-389-11	s	RESISTOR BLOCK, CHIP 47kx4
RB109	1-239-305-11	■	RESISTOR BLOCK, CHIP 4.7kx8
RB110	1-239-305-11	s	RESISTOR BLOCK, CHIP 4.7kx8
RB111	1-239-305-11	s	RESISTOR BLOCK, CHIP 4.7kx8
RB112	1-239-389-11	s	RESISTOR BLOCK, CHIP 47kx4
RB201-205	1-239-305-11	■	RESISTOR BLOCK, CHIP 4.7kx8
RB301	1-239-305-11	s	RESISTOR BLOCK, CHIP 4.7kx8
RB302	1-239-305-11	s	RESISTOR BLOCK, CHIP 4.7kx8
RB303	1-239-308-11	s	RESISTOR BLOCK, CHIP 47kx8
RB304	1-239-305-11	s	RESISTOR BLOCK, CHIP 4.7kx8
RB305	1-239-305-11	s	RESISTOR BLOCK, CHIP 4.7kx8
RB306	1-239-305-11	s	RESISTOR BLOCK, CHIP 4.7kx8
RB307	1-239-305-11	s	RESISTOR BLOCK, CHIP 4.7kx8
RB701-712	1-239-621-11	s	RESISTOR BLOCK, CHIP 22x4
RB713	1-239-305-11	s	RESISTOR BLOCK, CHIP 4.7kx8
RB714	1-239-305-11	s	RESISTOR BLOCK, CHIP 4.7kx8
RB717	1-239-305-11	s	RESISTOR BLOCK, CHIP 4.7kx8
S101	1-571-787-31	s	SWITCH, PUSH
S102	1-570-623-11	s	SWITCH, DIP 8-CKT
S201	1-692-504-11	s	SWITCH, SLIDE
S301	1-570-623-11	s	SWITCH, DIP 8-CKT
X701	1-579-448-21	s	OSCILLATOR, CRYSTAL 40.00MHz
X702	1-579-847-21	s	OSCILLATOR, CRYSTAL 55.00MHz

MY-74 BOARD(ESBK-7021(UC/J/CE))

Ref. No. or Q'ty	Part No.	SP	Description
1pc	A-8273-893-A	o	MOUNTED CIRCUIT BOARD, MY-74
6pcs	2-280-622-01	■	SUPPORT (M3), HEXAGON
6pcs	7-682-545-04	s	SCREW +B 3x4
9pcs	7-682-947-01	s	SCREW +PSW 3x6
2pcs	3-603-484-01	o	HANDLE,PCB
C1	1-128-401-11	s	ELECT 100uF 20% 25V
C2	1-128-401-11	s	ELECT 100uF 20% 25V
C3	1-163-038-91	■	CERAMIC, CHIP 0.1uF 25V
C4-10	1-126-396-11	s	ELECT, CHIP 47uF 20% 16V
C100-138	1-163-038-91	s	CERAMIC, CHIP 0.1uF 25V
C139	1-163-037-11	s	CERAMIC, CHIP 0.022uF 10% 25V
C140	1-163-038-91	s	CERAMIC, CHIP 0.1uF 25V
C141	1-163-038-91	s	CERAMIC, CHIP 0.1uF 25V
C142	1-135-085-21	s	TANTALUM, CHIP 4.7uF 10% 25V
C143	1-135-085-21	s	TANTALUM, CHIP 4.7uF 10% 25V
C150	1-163-037-11	s	CERAMIC, CHIP 0.022uF 10% 25V
C151	1-163-038-91	s	CERAMIC, CHIP 0.1uF 25V
C153	1-163-038-91	s	CERAMIC, CHIP 0.1uF 25V
C154	1-163-038-91	s	CERAMIC, CHIP 0.1uF 25V
C201-244	1-163-038-91	s	CERAMIC, CHIP 0.1uF 25V
C246	1-163-038-91	s	CERAMIC, CHIP 0.1uF 25V
C247	1-163-038-91	■	CERAMIC, CHIP 0.1uF 25V
C301-322	1-163-038-91	s	CERAMIC, CHIP 0.1uF 25V
C366	1-163-038-91	s	CERAMIC, CHIP 0.1uF 25V
C400	1-135-085-21	s	TANTALUM, CHIP 4.7uF 10% 25V
C401	1-163-038-91	s	CERAMIC, CHIP 0.1uF 25V
C402	1-163-038-91	s	CERAMIC, CHIP 0.1uF 25V
C403	1-163-038-91	s	CERAMIC, CHIP 0.1uF 25V
C405-413	1-163-038-91	■	CERAMIC, CHIP 0.1uF 25V
C416-426	1-163-038-91	s	CERAMIC, CHIP 0.1uF 25V
C427	1-163-037-11	s	CERAMIC, CHIP 0.022uF 10% 25V
C428	1-163-037-11	s	CERAMIC, CHIP 0.022uF 10% 25V
C429	1-163-038-91	s	CERAMIC, CHIP 0.1uF 25V
C431	1-135-085-21	s	TANTALUM, CHIP 4.7uF 10% 25V
C432	1-163-038-91	s	CERAMIC, CHIP 0.1uF 25V
C433	1-163-038-91	s	CERAMIC, CHIP 0.1uF 25V
C434	1-163-038-91	s	CERAMIC, CHIP 0.1uF 25V
C435	1-163-038-91	■	CERAMIC, CHIP 0.1uF 25V
C450	1-163-038-91	s	CERAMIC, CHIP 0.1uF 25V
C453	1-135-085-21	s	TANTALUM, CHIP 4.7uF 10% 25V
C454	1-163-037-11	s	CERAMIC, CHIP 0.022uF 10% 25V
C455	1-163-038-91	s	CERAMIC, CHIP 0.1uF 25V
C456	1-163-037-11	s	CERAMIC, CHIP 0.022uF 10% 25V
C457	1-163-038-91	s	CERAMIC, CHIP 0.1uF 25V
C458	1-163-037-11	■	CERAMIC, CHIP 0.022uF 10% 25V
C459	1-163-038-91	s	CERAMIC, CHIP 0.1uF 25V
C460	1-163-038-91	s	CERAMIC, CHIP 0.1uF 25V
C461	1-135-085-21	s	TANTALUM, CHIP 4.7uF 10% 25V
C462	1-135-085-21	s	TANTALUM, CHIP 4.7uF 10% 25V
C463	1-163-038-91	s	CERAMIC, CHIP 0.1uF 25V
C464	1-163-038-91	s	CERAMIC, CHIP 0.1uF 25V
C468	1-163-038-91	s	CERAMIC, CHIP 0.1uF 25V
CN60	1-770-265-11	■	CONNECTOR, BB 60P, HERMAPHRODITE
CN70	1-770-265-11	s	CONNECTOR, BB 60P, HERMAPHRODITE
CN801	1-778-261-11	o	CONNECTOR, BB 124P, MALE
CN802	1-778-261-11	o	CONNECTOR, ■ 124P, MALE
CN803	1-778-261-11	o	CONNECTOR, BB 124P, MALE
E105	1-535-877-22	o	CHIP, CHECKER

(MY-74 BOARD(ESBK-7021(UC/J/CE)))

Ref. No. or Q'ty	Part No.	SP	Description
E201	1-535-877-22	o	CHIP, CHECKER
E202	1-535-877-22	■	CHIP, CHECKER
E203	1-535-877-22	o	CHIP, CHECKER
E204	1-535-877-22	o	CHIP, CHECKER
E301	1-535-877-22	o	CHIP, CHECKER
E302	1-535-877-22	o	CHIP, CHECKER
E303	1-535-877-22	o	CHIP, CHECKER
E401	1-535-877-22	o	CHIP, CHECKER
E402	1-535-877-22	o	CHIP, CHECKER
E403	1-535-877-22	■	CHIP, CHECKER
FL401	1-239-642-21	s	EMIFIL ARRAY, CHIP
FL402	1-239-642-21	s	EMIFIL ARRAY, CHIP
IC101	8-759-926-48	s	IC SN74HC244NS
IC102	8-759-926-48	s	IC SN74HC244NS
IC103	8-759-926-48	■	IC SN74HC244NS
IC104	8-759-926-48	s	IC SN74HC244NS
IC106	8-759-925-85	s	IC SN74HC32ANS
IC107	8-759-925-76	s	IC SN74HC08ANS
IC108	8-759-175-29	s	IC TC74VHC374F
IC109	8-759-985-45	■	IC 74AC175SJ
IC110	8-759-987-82	s	IC 74AC00SJ
IC111	8-759-099-37	s	IC SN74HCT74ANS-E05
IC112	8-759-926-24	s	IC SN74HC164ANS
IC113	8-759-985-32	s	IC 74AC138SJ
IC114	8-759-985-32	s	IC 74AC138SJ
IC115	8-759-985-32	s	IC 74AC138SJ
IC116	8-759-926-28	s	IC SN74HC174ANS
IC117	8-759-926-28	■	IC SN74HC174ANS
IC118	8-759-926-28	■	IC SN74HC174ANS
IC119	8-759-926-67	■	IC SN74HC374ANS
IC120	8-759-983-24	s	IC CXD8033Q
IC121	8-759-983-24	s	IC CXD8033Q
IC122	8-759-983-24	s	IC CXD8033Q
IC123	8-759-925-76	■	IC SN74HC08ANS
IC124	8-759-925-76	s	IC SN74HC08ANS
IC125	8-759-925-76	s	IC SN74HC08ANS
IC126	8-759-926-12	s	IC SN74HC139ANS
IC127	8-759-927-46	s	IC SN74HC00ANS
IC128	8-759-175-29	s	IC TC74VHC374F
IC129	8-759-925-85	s	IC SN74HC32ANS
IC130	8-759-925-76	s	IC SN74HC08ANS
IC131	8-759-925-76	s	IC SN74HC08ANS
IC132	8-759-925-76	s	IC SN74HC08ANS
IC133	8-759-983-24	s	IC CXD8033Q
IC134	8-759-294-72	s	IC CXD8872Q
IC135	8-759-063-39	■	IC CXD8267Q
IC136	8-759-063-39	s	IC CXD8267Q
IC137	8-759-063-39	s	IC CXD8267Q
IC139	8-759-272-05	s	IC TC74VHCT244F
IC150	8-759-934-41	s	IC SN74ALS240ANS
IC151	8-759-934-41	s	IC SN74ALS240ANS
IC153	8-759-926-17	s	IC SN74HC153ANS
IC154	8-759-926-67	s	IC SN74HC374ANS
IC201	8-759-063-40	■	IC CXD8266Q
IC202	8-759-063-40	s	IC CXD8266Q
IC203	8-759-063-40	■	IC CXD8266Q
IC204	8-759-063-40	s	IC CXD8266Q
IC205	8-759-294-74	s	IC CY7C194-25VC

(MY-74 BOARD(ESBK-7021(UC/J/CE)))

Ref. No. or Q'ty	Part No.	SP	Description
IC206	8-759-294-74	■	IC CY7C194-25VC
IC207	8-759-294-74	s	IC CY7C194-25VC
IC208	8-759-294-74	s	IC CY7C194-25VC
IC209	8-759-294-74	s	IC CY7C194-25VC
IC210	8-759-294-74	s	IC CY7C194-25VC
IC211	8-759-294-74	s	IC CY7C194-25VC
IC212	8-759-294-74	s	IC CY7C194-25VC
IC213	8-759-294-74	s	IC CY7C194-25VC
IC214	8-759-294-74	s	IC CY7C194-25VC
IC215	8-759-294-74	s	IC CY7C194-25VC
IC216	8-759-294-74	s	IC CY7C194-25VC
IC217	8-759-294-74	s	IC CY7C194-25VC
IC218	8-759-294-74	s	IC CY7C194-25VC
IC219	8-759-294-74	s	IC CY7C194-25VC
IC220	8-759-294-74	s	IC CY7C194-25VC
IC221	8-759-063-39	s	IC CXD8267Q
IC222	8-759-063-39	s	IC CXD8267Q
IC223	8-759-063-40	s	IC CXD8266Q
IC224	8-759-294-74	s	IC CY7C194-25VC
IC225	8-759-294-74	s	IC CY7C194-25VC
IC226	8-759-294-74	s	IC CY7C194-25VC
IC227	8-759-294-74	s	IC CY7C194-25VC
IC228	8-759-294-74	s	IC CY7C194-25VC
IC229	8-759-294-74	■	IC CY7C194-25VC
IC230	8-759-294-74	s	IC CY7C194-25VC
IC231	8-759-294-74	s	IC CY7C194-25VC
IC232	8-759-063-39	s	IC CXD8267Q
IC233	8-759-063-39	s	IC CXD8267Q
IC234	8-759-989-06	s	IC 74F283SJ
IC235	8-759-989-06	s	IC 74F283SJ
IC237	8-759-186-51	s	IC TC74VHC157F
IC238	8-759-186-51	s	IC TC74VHC157F
IC301	8-759-063-40	s	IC CXD8266Q
IC302	8-759-063-40	s	IC CXD8266Q
IC303	8-759-294-74	s	IC CY7C194-25VC
IC304	8-759-294-74	■	IC CY7C194-25VC
IC305	8-759-294-74	■	IC CY7C194-25VC
IC306	8-759-294-74	s	IC CY7C194-25VC
IC307	8-759-294-74	s	IC CY7C194-25VC
IC308	8-759-294-74	s	IC CY7C194-25VC
IC309	8-759-294-74	s	IC CY7C194-25VC
IC310	8-759-294-74	s	IC CY7C194-25VC
IC311	8-759-294-73	s	IC CXD8871Q
IC312	8-759-294-70	s	IC CXD8927Q
IC313	8-759-294-70	s	IC CXD8927Q
IC314	8-759-294-70	s	IC CXD8927Q
IC315	8-759-294-70	s	IC CXD8927Q
IC401	8-759-926-11	s	IC SN74HC138ANS
IC402	8-759-926-11	s	IC SN74HC138ANS
IC403	8-759-292-80	s	IC CXD8878Q
IC405	8-759-926-67	s	IC SN74HC374ANS
IC406	8-759-926-67	s	IC SN74HC374ANS
IC407	8-759-926-67	s	IC SN74HC374ANS
IC408	8-759-926-67	s	IC SN74HC374ANS
IC409	8-759-926-67	s	IC SN74HC374ANS
IC410	8-759-926-67	s	IC SN74HC374ANS
IC411	8-759-926-67	s	IC SN74HC374ANS
IC412	8-759-186-39	s	IC TC74VHC74F
IC413	8-759-292-80	■	IC CXD8878Q

(MY-74 BOARD(ESBK-7021(UC/J/CE)))

Ref. No. or Q'ty	Part No.	SP	Description
IC416	8-759-926-67	■	IC SN74HC374ANS
IC417	8-759-926-67	s	IC SN74HC374ANS
IC418	8-759-926-67	s	IC SN74HC374ANS
IC419	8-759-926-67	s	IC SN74HC374ANS
IC420	8-759-292-80	s	IC CXD8878Q
IC421	8-759-292-80	■	IC CXD8878Q
IC422	8-759-926-18	s	IC SN74HC157ANS
IC423	8-759-926-18	s	IC SN74HC157ANS
IC424	8-759-925-90	s	IC SN74HC74ANS
IC425	8-759-926-67	■	IC SN74HC374ANS
IC426	8-759-926-67	s	IC SN74HC374ANS
IC427	8-759-359-54	s	IC SN74ALS244CNS-E20
IC428	8-759-359-54	s	IC SN74ALS244CNS-E20
IC429	8-759-926-29	s	IC SN74HC175ANS
IC430	8-759-081-42	■	IC TC74VHC00F
IC431	8-759-926-67	s	IC SN74HC374ANS
IC432	8-759-926-67	■	IC SN74HC374ANS
IC433	8-759-926-67	s	IC SN74HC374ANS
IC434	8-759-926-67	■	IC SN74HC374ANS
IC435	8-759-926-67	s	IC SN74HC374ANS
IC436	8-759-926-67	s	IC SN74HC374ANS
IC437	8-759-926-67	s	IC SN74HC374ANS
IC438	8-759-926-67	s	IC SN74HC374ANS
IC439	8-759-926-67	■	IC SN74HC374ANS
IC440	8-759-926-67	s	IC SN74HC374ANS
L1	1-412-525-31	■	INDUCTOR 10uH
L2	1-412-525-31	s	INDUCTOR 10uH
L100	1-500-202-11	s	BEAD, FERRITE
L101	1-500-202-11	s	BEAD, FERRITE
L201	1-500-202-11	s	BEAD, FERRITE
L202	1-500-202-11	■	BEAD, FERRITE
LA01-405	1-500-202-11	s	BEAD, FERRITE
PS1	⚠ 1-532-686-21	s	LINK, IC 2.7A
R100	1-216-611-11	s	METAL, CHIP 22 0.5% 1/10W
R101	1-216-699-11	s	METAL, CHIP 100k 0.5% 1/10W
R106	1-216-663-11	s	METAL, CHIP 3.3k 0.5% 1/10W
R107	1-216-663-11	s	METAL, CHIP 3.3k 0.5% 1/10W
R108	1-216-611-11	s	METAL, CHIP 22 0.5% 1/10W
R110-114	1-216-611-11	s	METAL, CHIP 22 0.5% 1/10W
R201	1-216-667-11	s	METAL, CHIP 4.7k 0.5% 1/10W
R401	1-216-699-11	s	METAL, CHIP 100k 0.5% 1/10W
RB101-106	1-239-309-11	s	RESISTOR BLOCK, CHIP 100kx8
RB107	1-239-621-11	■	RESISTOR BLOCK, CHIP 22x4
RB108-114	1-239-309-11	s	RESISTOR BLOCK, CHIP 100kx8
RB115	1-239-621-11	s	RESISTOR BLOCK, CHIP 22x4
RB116	1-239-428-11	■	RESISTOR BLOCK, CHIP 3.3kx4
RB117	1-239-428-11	s	RESISTOR BLOCK, CHIP 3.3kx4
RB118	1-239-428-11	s	RESISTOR BLOCK, CHIP 3.3kx4
RB119	1-239-621-11	s	RESISTOR BLOCK, CHIP 22x4
RB201	1-239-309-11	s	RESISTOR BLOCK, CHIP 100kx8
RB202	1-239-309-11	s	RESISTOR BLOCK, CHIP 100kx8
RB400	1-239-621-11	s	RESISTOR BLOCK, CHIP 22x4
RB401-406	1-239-309-11	s	RESISTOR BLOCK, CHIP 100kx8

(MY-74 BOARD(ESBK-7021(UC/J/CE)))

Ref. No. or Q'ty	Part No.	SP	Description
RB407	1-239-621-11	s	RESISTOR BLOCK, CHIP 22x4
RB408	1-239-621-11	s	RESISTOR BLOCK, CHIP 22x4
RB409	1-239-621-11	s	RESISTOR BLOCK, CHIP 22x4
S201	1-570-373-12	s	SWITCH, SLIDE
TP400	1-535-877-22	o	CHIP, CHECKER
TP401	1-535-877-22	o	CHIP, CHECKER
TP402	1-535-877-22	o	CHIP, CHECKER

MY-75 BOARD(ESBK-7023(UC/J/CE))

Ref. No. or Q'ty	Part No.	SP	Description
1pc	A-8273-884-A	o	MOUNTED CIRCUIT BOARD, MY-75
9pcs	3-718-661-01	■	SUPPORT, TC
9pcs	7-682-545-04	s	SCREW +B 3x4
9pcs	7-682-947-01	s	SCREW +PSW 3x6
2pcs	3-603-484-01	o	HANDLE, PCB
C11	1-128-401-11	s	ELECT 100uF 20% 25V
C12	1-163-038-91	s	CERAMIC, CHIP 0.1uF 25V
C13	1-128-401-11	s	ELECT 100uF 20% 25V
C14	1-163-038-91	s	CERAMIC, CHIP 0.1uF 25V
C21-29	1-126-396-11	s	ELECT, CHIP 47uF 20% 16V
C101	1-163-037-11	■	CERAMIC, CHIP 0.022uF 10% 25V
C102-127	1-163-038-91	s	CERAMIC, CHIP 0.1uF 25V
C151	1-135-085-21	■	TANTALUM, CHIP 4.7uF 10% 25V
C201-230	1-163-038-91	■	CERAMIC, CHIP 0.1uF 25V
C301	1-163-037-11	s	CERAMIC, CHIP 0.022uF 10% 25V
C302	1-163-037-11	s	CERAMIC, CHIP 0.022uF 10% 25V
C303-323	1-163-038-91	s	CERAMIC, CHIP 0.1uF 25V
C351	1-135-085-21	s	TANTALUM, CHIP 4.7uF 10% 25V
C352	1-135-085-21	s	TANTALUM, CHIP 4.7uF 10% 25V
C401-430	1-163-038-91	s	CERAMIC, CHIP 0.1uF 25V
C501-540	1-163-038-91	s	CERAMIC, CHIP 0.1uF 25V
C601-634	1-163-038-91	s	CERAMIC, CHIP 0.1uF 25V
C701	1-163-037-11	s	CERAMIC, CHIP 0.022uF 10% 25V
C702	1-163-038-91	s	CERAMIC, CHIP 0.1uF 25V
C703	1-163-037-11	■	CERAMIC, CHIP 0.022uF 10% 25V
C704	1-163-038-91	s	CERAMIC, CHIP 0.1uF 25V
C705	1-163-038-91	■	CERAMIC, CHIP 0.1uF 25V
C706	1-163-037-11	s	CERAMIC, CHIP 0.022uF 10% 25V
C707	1-163-037-11	■	CERAMIC, CHIP 0.022uF 10% 25V
C708	1-163-038-91	s	CERAMIC, CHIP 0.1uF 25V
C709	1-163-038-91	s	CERAMIC, CHIP 0.1uF 25V
C710	1-163-037-11	s	CERAMIC, CHIP 0.022uF 10% 25V
C711	1-163-037-11	■	CERAMIC, CHIP 0.022uF 10% 25V
C751	1-135-085-21	s	TANTALUM, CHIP 4.7uF 10% 25V
C753	1-135-085-21	s	TANTALUM, CHIP 4.7uF 10% 25V
C756	1-135-085-21	s	TANTALUM, CHIP 4.7uF 10% 25V
C757	1-135-085-21	s	TANTALUM, CHIP 4.7uF 10% 25V
C760	1-135-085-21	s	TANTALUM, CHIP 4.7uF 10% 25V
C761	1-135-085-21	s	TANTALUM, CHIP 4.7uF 10% 25V
CN60	1-766-364-11	s	CONNECTOR, BB 100P, HERMAPHRODITE
CN70	1-750-065-11	o	CONNECTOR, BB 60P, HERMAPHRODITE
CN80	1-766-364-11	s	CONNECTOR, BB 100P, HERMAPHRODITE
CN801	1-778-261-11	o	CONNECTOR, BB 124P, MALE
CN802	1-778-261-11	o	CONNECTOR, BB 124P, MALE
CN803	1-778-261-11	■	CONNECTOR, BB 124P, MALE
E9	1-535-877-22	o	CHIP, CHECKER
FL710	1-239-642-21	s	EMIFIL ARRAY, CHIP
FL711	1-239-642-21	s	EMIFIL ARRAY, CHIP
IC101	8-759-934-41	s	IC SN74ALS240ANS
IC102	8-759-049-12	s	IC SN74ALS540NS
IC103	8-759-049-12	s	IC SN74ALS540NS
IC104	8-759-294-69	s	IC CXD8879Q
IC105	8-759-985-26	s	IC 74AC74SJ
IC106	8-759-925-90	s	IC SN74HC74ANS
IC107	8-759-926-24	s	IC SN74HC164ANS
IC108	8-759-987-82	s	IC 74AC00SJ
IC109	8-759-926-67	s	IC SN74HC374ANS

(MY-75 BOARD(ESBK-7023(UC/J/CE)))

Ref. No. or Q'ty	Part No.	SP	Description
IC110	8-759-347-38	s	IC SN74ALS138ANS
IC111	8-759-925-90	s	IC SN74HC74ANS
IC112	8-759-099-38	s	IC SN74HCT374ANS-E05
IC113	8-759-099-38	s	IC SN74HCT374ANS-E05
IC114	8-759-099-38	s	IC SN74HCT374ANS-E05
IC115	8-759-099-38	s	IC SN74HCT374ANS-E05
IC116	8-759-099-38	s	IC SN74HCT374ANS-E05
IC117	8-759-985-32	s	IC 74AC138SJ
IC118	8-759-985-32	s	IC 74AC138SJ
IC119	8-759-985-32	s	IC 74AC138SJ
IC120	8-759-985-32	s	IC 74AC138SJ
IC121	8-759-985-32	s	IC 74AC138SJ
IC122	8-759-926-67	s	IC SN74HC374ANS
IC123	8-759-926-67	s	IC SN74HC374ANS
IC124	8-759-926-67	s	IC SN74HC374ANS
IC125	8-759-926-67	s	IC SN74HC374ANS
IC126	8-759-926-67	s	IC SN74HC374ANS
IC127	8-759-926-24	s	IC SN74HC164ANS
IC201	8-759-926-69	s	IC SN74HC377ANS
IC202	8-759-926-69	s	IC SN74HC377ANS
IC203	8-759-926-28	s	IC SN74HC174ANS
IC204	8-759-926-18	s	IC SN74HC157ANS
IC205	8-759-926-17	■	IC SN74HC153ANS
IC206	8-759-983-24	s	IC CXD8033Q
IC207	8-759-983-24	s	IC CXD8033Q
IC208	8-759-294-72	s	IC CXD8872Q
IC209	8-759-392-82	s	IC CXD8613Q
IC210	8-759-926-18	s	IC SN74HC157ANS
IC211	8-759-926-18	s	IC SN74HC157ANS
IC212	8-759-926-18	s	IC SN74HC157ANS
IC213	8-759-926-18	s	IC SN74HC157ANS
IC214	8-759-425-36	o	IC 27H010-ES7A-MY214V1.00
IC215	8-759-425-37	o	IC 27H010-ES7A-MY215V1.00
IC216	8-759-926-18	s	IC SN74HC157ANS
IC217	8-759-926-18	s	IC SN74HC157ANS
IC218	8-759-926-18	s	IC SN74HC157ANS
IC219	8-759-926-18	s	IC SN74HC157ANS
IC220	8-759-990-97	s	IC CXD8156Q
IC221	8-759-292-78	s	IC CXD8890Q
IC222	8-759-425-39	o	IC 7C291A-ES7A-MY222V1.00
IC223	8-759-179-94	s	IC HM530281-20
IC224	8-759-292-78	s	IC CXD8890Q
IC225	8-759-425-39	o	IC 7C291A-ES7A-MY222V1.00
IC226	8-759-179-94	s	IC HM530281-20
IC227	8-759-993-40	s	IC 74F521SJ
IC228	8-759-925-76	■	IC SN74HC08ANS
IC229	8-759-925-76	s	IC SN74HC08ANS
IC301	8-759-385-57	s	IC CXD8560Q
IC302	8-759-385-57	s	IC CXD8560Q
IC303	8-759-147-05	s	IC UPD42101G-3
IC304	8-759-147-05	s	IC UPD42101G-3
IC305	8-759-147-05	s	IC UPD42101G-3
IC306	8-759-147-05	s	IC UPD42101G-3
IC307	8-759-147-05	s	IC UPD42101G-3
IC308	8-759-147-05	s	IC UPD42101G-3
IC309	8-759-385-56	s	IC CXD8559Q
IC310	8-759-147-05	s	IC UPD42101G-3
IC311	8-759-147-05	s	IC UPD42101G-3
IC312	8-759-147-05	s	IC UPD42101G-3

(MY-75 BOARD(ESBK-7023(UC/J/CE)))

Ref. No. or Q'ty	Part No.	SP	Description
IC313	8-759-147-05	s	IC UPD42101G-3
IC314	8-759-147-05	s	IC UPD42101G-3
IC315	8-759-147-05	s	IC UPD42101G-3
IC316	8-759-385-56	■	IC CXD8559Q
IC317	8-759-147-05	■	IC UPD42101G-3
IC318	8-759-147-05	s	IC UPD42101G-3
IC319	8-759-147-05	s	IC UPD42101G-3
IC320	8-759-147-05	s	IC UPD42101G-3
IC321	8-759-147-05	s	IC UPD42101G-3
IC322	8-759-147-05	s	IC UPD42101G-3
IC323	8-759-385-56	■	IC CXD8559Q
IC401	8-759-983-24	■	IC CXD8033Q
IC402	8-759-983-24	s	IC CXD8033Q
IC403	8-759-926-12	s	IC SN74HC139ANS
IC404	8-759-985-67	s	IC 74AC374SJ
IC405	8-759-927-46	s	IC SN74HC00ANS
IC406	8-759-925-76	■	IC SN74HC08ANS
IC407	8-759-925-85	s	IC SN74HC32ANS
IC408	8-759-925-76	s	IC SN74HC08ANS
IC409	8-759-925-76	s	IC SN74HC08ANS
IC410	8-759-925-85	s	IC SN74HC32ANS
IC411	8-759-925-76	s	IC SN74HC08ANS
IC412	8-759-925-76	■	IC SN74HC08ANS
IC413	8-759-926-67	s	IC SN74HC374ANS
IC414	8-759-239-23	s	IC TC74HC86AF
IC415	8-759-925-76	s	IC SN74HC08ANS
IC416	8-759-926-67	■	IC SN74HC374ANS
IC417	8-759-983-24	s	IC CXD8033Q
IC418	8-759-294-72	s	IC CXD8872Q
IC419	8-759-425-40	o	IC 7032LC44-ES7A-MY419V1.00
IC420	8-759-926-18	s	IC SN74HC157ANS
IC421	8-759-926-18	s	IC SN74HC157ANS
IC422	8-759-926-67	s	IC SN74HC374ANS
IC423	8-759-063-39	s	IC CXD8267Q
IC424	8-759-063-39	s	IC CXD8267Q
IC425	8-759-063-39	s	IC CXD8267Q
IC426	8-759-063-39	s	IC CXD8267Q
IC427	8-759-926-29	s	IC SN74HC175ANS
IC428	8-759-925-76	s	IC SN74HC08ANS
IC429	8-759-926-67	s	IC SN74HC374ANS
IC430	8-759-926-18	s	IC SN74HC157ANS
IC501	8-759-063-40	s	IC CXD8266Q
IC502	8-759-063-40	■	IC CXD8266Q
IC503	8-759-063-40	s	IC CXD8266Q
IC504	8-759-063-40	s	IC CXD8266Q
IC505	8-759-294-74	s	IC CY7C194-25VC
IC506	8-759-294-74	s	IC CY7C194-25VC
IC507	8-759-294-74	■	IC CY7C194-25VC
IC508	8-759-294-74	s	IC CY7C194-25VC
IC509	8-759-294-74	s	IC CY7C194-25VC
IC510	8-759-294-74	■	IC CY7C194-25VC
IC511	8-759-294-74	s	IC CY7C194-25VC
IC512	8-759-294-74	s	IC CY7C194-25VC
IC513	8-759-294-74	s	IC CY7C194-25VC
IC514	8-759-294-74	■	IC CY7C194-25VC
IC515	8-759-294-74	s	IC CY7C194-25VC
IC516	8-759-294-74	s	IC CY7C194-25VC
IC517	8-759-294-74	s	IC CY7C194-25VC
IC518	8-759-294-74	s	IC CY7C194-25VC

(MY-75 BOARD(ESBK-7023(UC/J/CE)))

Ref. No. or Q'ty	Part No.	SP	Description
IC519	8-759-294-74	s	IC CY7C194-25VC
IC520	8-759-294-74	s	IC CY7C194-25VC
IC521	8-759-294-74	s	IC CY7C194-25VC
IC522	8-759-294-74	s	IC CY7C194-25VC
IC523	8-759-294-74	s	IC CY7C194-25VC
IC524	8-759-294-74	s	IC CY7C194-25VC
IC525	8-759-294-74	s	IC CY7C194-25VC
IC526	8-759-294-74	s	IC CY7C194-25VC
IC527	8-759-294-74	s	IC CY7C194-25VC
IC528	8-759-294-74	s	IC CY7C194-25VC
IC529	8-759-294-74	s	IC CY7C194-25VC
IC530	8-759-294-74	s	IC CY7C194-25VC
IC531	8-759-294-74	s	IC CY7C194-25VC
IC532	8-759-294-74	s	IC CY7C194-25VC
IC533	8-759-294-74	s	IC CY7C194-25VC
IC534	8-759-294-74	s	IC CY7C194-25VC
IC535	8-759-294-74	s	IC CY7C194-25VC
IC536	8-759-294-74	s	IC CY7C194-25VC
IC537	8-759-063-39	■	IC CXD8267Q
IC538	8-759-063-39	s	IC CXD8267Q
IC539	8-759-063-39	s	IC CXD8267Q
IC540	8-759-063-39	s	IC CXD8267Q
IC601	8-759-063-40	s	IC CXD8266Q
IC602	8-759-063-40	s	IC CXD8266Q
IC603	8-759-294-74	s	IC CY7C194-25VC
IC604	8-759-294-74	s	IC CY7C194-25VC
IC605	8-759-294-74	s	IC CY7C194-25VC
IC606	8-759-294-74	s	IC CY7C194-25VC
IC607	8-759-294-74	s	IC CY7C194-25VC
IC608	8-759-294-74	s	IC CY7C194-25VC
IC609	8-759-294-74	s	IC CY7C194-25VC
IC610	8-759-294-74	s	IC CY7C194-25VC
IC611	8-759-294-74	s	IC CY7C194-25VC
IC612	8-759-294-74	s	IC CY7C194-25VC
IC613	8-759-294-74	s	IC CY7C194-25VC
IC614	8-759-294-74	s	IC CY7C194-25VC
IC615	8-759-294-74	s	IC CY7C194-25VC
IC616	8-759-294-74	s	IC CY7C194-25VC
IC617	8-759-294-74	s	IC CY7C194-25VC
IC618	8-759-294-74	s	IC CY7C194-25VC
IC619	8-759-063-39	■	IC CXD8267Q
IC620	8-759-063-39	s	IC CXD8267Q
IC621	8-759-294-70	s	IC CXD8927Q
IC622	8-759-294-70	s	IC CXD8927Q
IC623	8-759-294-70	s	IC CXD8927Q
IC624	8-759-294-70	s	IC CXD8927Q
IC625	8-759-926-18	s	IC SN74HC157ANS
IC626	8-759-926-18	s	IC SN74HC157ANS
IC627	8-759-926-67	s	IC SN74HC374ANS
IC628	8-759-926-67	s	IC SN74HC374ANS
IC629	8-759-926-67	s	IC SN74HC374ANS
IC630	8-759-926-48	s	IC SN74HC244NS
IC631	8-759-926-48	s	IC SN74HC244NS
IC632	8-759-926-48	s	IC SN74HC244NS
IC633	8-759-063-39	s	IC CXD8267Q
IC634	8-759-063-39	s	IC CXD8267Q
IC701	8-759-385-57	s	IC CXD8560Q
IC702	8-759-385-57	s	IC CXD8560Q
IC703	8-759-385-57	s	IC CXD8560Q

(MY-75 BOARD(ESBK-7023(UC/J/CE)))

Ref. No. or Q'ty	Part No.	SP	Description
IC704	8-759-385-57	s	IC CXD8560Q
IC705	8-759-385-57	s	IC CXD8560Q
IC706	8-759-515-09	s	IC SN74ALS374ANS
IC707	8-759-515-09	s	IC SN74ALS374ANS
IC708	8-759-515-09	s	IC SN74ALS374ANS
IC709	8-759-515-09	s	IC SN74ALS374ANS
IC710	8-759-359-54	s	IC SN74ALS244CNS-E20
IC711	8-759-359-54	s	IC SN74ALS244CNS-E20
L1	1-412-525-31	■	INDUCTOR 10uH
L2	1-412-525-31	s	INDUCTOR 10uH
L101	1-500-202-11	s	BEAD, FERRITE
L301	1-500-202-11	s	BEAD, FERRITE
L302	1-500-202-11	■	BEAD, FERRITE
L701	1-500-202-11	s	BEAD, FERRITE
L703	1-500-202-11	s	BEAD, FERRITE
L706	1-500-202-11	s	BEAD, FERRITE
L707	1-500-202-11	s	BEAD, FERRITE
L710	1-500-202-11	s	BEAD, FERRITE
L711	1-500-202-11	s	BEAD, FERRITE
PS1	⚠ 1-532-686-21	s	LINK, IC 2.7A
R101	1-216-663-11	■	METAL, CHIP 3.3k 0.5% 1/10W
R102	1-216-663-11	s	METAL, CHIP 3.3k 0.5% 1/10W
R201	1-216-663-11	■	METAL, CHIP 3.3k 0.5% 1/10W
R401	1-216-663-11	s	METAL, CHIP 3.3k 0.5% 1/10W
R402	1-216-663-11	s	METAL, CHIP 3.3k 0.5% 1/10W
RB101	1-239-421-11	s	RESISTOR BLOCK, CHIP 680x4
RB102	1-239-422-11	■	RESISTOR BLOCK, CHIP 820x4
RB103	1-239-621-11	s	RESISTOR BLOCK, CHIP 22x4
RB104	1-239-428-11	s	RESISTOR BLOCK, CHIP 3.3kx4
RB105	1-239-428-11	■	RESISTOR BLOCK, CHIP 3.3kx4
RB106	1-239-621-11	s	RESISTOR BLOCK, CHIP 22x4
RB107	1-239-621-11	s	RESISTOR BLOCK, CHIP 22x4
RB108	1-239-428-11	s	RESISTOR BLOCK, CHIP 3.3kx4
RB109	1-239-428-11	s	RESISTOR BLOCK, CHIP 3.3kx4
RB110	1-239-621-11	s	RESISTOR BLOCK, CHIP 22x4
RB111	1-239-621-11	s	RESISTOR BLOCK, CHIP 22x4
RB112	1-239-309-11	s	RESISTOR BLOCK, CHIP 100kx8
RB113	1-239-309-11	s	RESISTOR BLOCK, CHIP 100kx8
RB114	1-239-309-11	s	RESISTOR BLOCK, CHIP 100kx8
RB301	1-239-309-11	s	RESISTOR BLOCK, CHIP 100kx8
RB302	1-239-309-11	s	RESISTOR BLOCK, CHIP 100kx8
RB303	1-239-309-11	s	RESISTOR BLOCK, CHIP 100kx8
RB401-411	1-239-309-11	s	RESISTOR BLOCK, CHIP 100kx8
RB601	1-239-309-11	s	RESISTOR BLOCK, CHIP 100kx8
RB602	1-239-309-11	s	RESISTOR BLOCK, CHIP 100kx8
RB603	1-239-309-11	s	RESISTOR BLOCK, CHIP 100kx8
RB701-705	1-239-309-11	s	RESISTOR BLOCK, CHIP 100kx8
RB710	1-239-621-11	s	RESISTOR BLOCK, CHIP 22x4
RB711	1-239-621-11	s	RESISTOR BLOCK, CHIP 22x4
RB712	1-239-621-11	s	RESISTOR BLOCK, CHIP 22x4
RB713	1-239-621-11	s	RESISTOR BLOCK, CHIP 22x4
TP1	1-535-877-22	o	CHIP, CHECKER
TP2	1-535-877-22	o	CHIP, CHECKER
TP3	1-535-877-22	o	CHIP, CHECKER

PU-84A BOARD(ESBK-7022(UC/J/CE))

Ref. No. or Q'ty	Part No.	SP	Description
This mounted circuit board is not supplied for repair part.			
1pc	8-759-425-69	o	IC 27C4001-ES7BN-FM5V1.00(for UC/J)
1pc	8-759-425-76	o	IC 27C4001-ES7BP-FM5V2.00(for CE)
1pc	8-759-425-75	o	IC 27C4001-ES7BN-FM6V1.00(for UC/J)
1pc	8-759-425-77	o	IC 27C4001-ES7BP-FM6V2.00(for CE)
C1	1-126-396-11	s	ELECT, CHIP 47uF 20% 16V
C2	1-126-396-11	s	ELECT, CHIP 47uF 20% 16V
C101-132	1-163-038-91	s	CERAMIC, CHIP 0.1uF 25V
C201-217	1-163-038-91	s	CERAMIC, CHIP 0.1uF 25V
CN60	1-770-265-11	s	CONNECTOR, BB 60P, HERMAPHRODITE
CN70	1-770-265-11	s	CONNECTOR, BB 60P, HERMAPHRODITE
IC101	8-759-174-16	s	IC TC74VHC244F
IC102	8-759-174-16	■	IC TC74VHC244F
IC103	8-759-174-16	s	IC TC74VHC244F
IC104	8-759-174-16	s	IC TC74VHC244F
IC105	8-759-174-16	s	IC TC74VHC244F
IC106	8-759-174-16	s	IC TC74VHC244F
IC107	8-759-514-51	s	IC 74AC139SJ-R5
IC108	8-759-985-32	s	IC 74AC138SJ
IC109	8-759-925-90	s	IC SN74HC74ANS
IC110	8-759-985-36	s	IC 74AC157SJ
IC111	8-759-985-36	s	IC 74AC157SJ
IC112	8-759-985-36	s	IC 74AC157SJ
IC113	8-759-174-16	s	IC TC74VHC244F
IC114	8-759-174-16	s	IC TC74VHC244F
IC115	8-759-063-42	s	IC CXD8264Q
IC116	8-759-254-78	s	IC CY7C185-25VCTEL
IC117	8-759-254-78	s	IC CY7C185-25VCTEL
IC118	8-759-987-82	s	IC 74AC00SJ
IC119	8-759-294-71	s	IC CXD8936Q
IC120	8-759-294-71	s	IC CXD8936Q
IC121	8-759-063-40	■	IC CXD8266Q
IC122	8-759-063-40	s	IC CXD8266Q
IC123	8-759-254-78	s	IC CY7C185-25VCTEL
IC124	8-759-254-78	s	IC CY7C185-25VCTEL
IC125	8-759-254-78	s	IC CY7C185-25VCTEL
IC126	8-759-254-78	s	IC CY7C185-25VCTEL
IC127	8-759-254-78	■	IC CY7C185-25VCTEL
IC128	8-759-254-78	■	IC CY7C185-25VCTEL
IC129	8-759-254-78	s	IC CY7C185-25VCTEL
IC130	8-759-254-78	s	IC CY7C185-25VCTEL
IC131	8-759-063-39	■	IC CXD8267Q
IC132	8-759-063-39	s	IC CXD8267Q
IC201	8-759-985-36	s	IC 74AC157SJ
IC202	8-759-985-36	s	IC 74AC157SJ
IC203	8-759-985-36	s	IC 74AC157SJ
IC204	8-759-985-36	s	IC 74AC157SJ
IC205	8-759-180-00	s	IC CXD8839Q
IC206	8-759-180-00	■	IC CXD8839Q
IC207	8-759-180-00	s	IC CXD8839Q
IC208	8-759-180-00	s	IC CXD8839Q
IC209	8-759-985-25	s	IC 74AC32SJ
IC210	8-759-985-25	s	IC 74AC32SJ
IC211	8-759-396-09	s	IC 74AC20SJX
IC212	8-759-985-25	s	IC 74AC32SJ
IC213	8-759-063-39	s	IC CXD8267Q
IC214	8-759-063-39	s	IC CXD8267Q
IC215	8-759-063-39	s	IC CXD8267Q

(PU-84A BOARD(ESBK-7022(UC/J/CE)))

Ref. No. or Q'ty	Part No.	SP	Description
IC216	8-759-396-10	s	IC 74AC153SJX
IC217	8-759-925-76	s	IC SN74HC08ANS
RB101-105	1-239-309-11	s	RESISTOR BLOCK, CHIP 100kx8

RE-122 BOARD(ES-7(UC/J))

Ref. No. or Q'ty	Part No.	SP	Description
1pc	A-8273-938-A	o	MOUNTED CIRCUIT BOARD, RE-122
6pcs	7-682-549-04	s	SCREW +B 3x10
1pc	3-179-163-01	o	HEAT SINK
1pc	3-172-778-01	s	PAD, THERMAL
6pcs	7-682-950-01	s	SCREW +PSW 3x12
1pc	3-179-163-01	o	HEAT SINK
1pc	3-172-778-01	s	PAD, THERMAL
6pcs	7-682-950-01	s	SCREW +PSW 3x12
1pc	3-172-778-01	s	PAD, THERMAL
6pcs	7-682-950-01	s	SCREW +PSW 3x12
4pcs	7-682-549-04	s	SCREW +B 3x10
1pc	7-684-023-04	■	N 3, TYPE 2
1pc	7-682-549-04	s	SCREW +B 3x10
1pc	7-684-023-04	■	N 3, TYPE 2
2pcs	7-682-549-04	s	SCREW +B 3x10
1pc	7-682-565-04	s	SCREW +B 4x16
C100	⚠ 1-113-900-11	■	CERAMIC 470pF 10% 250V
C101	⚠ 1-113-900-11	s	CERAMIC 470pF 10% 250V
C102	⚠ 1-113-900-11	s	CERAMIC 470pF 10% 250V
C103	⚠ 1-113-900-11	s	CERAMIC 470pF 10% 250V
C104	⚠ 1-113-900-11	s	CERAMIC 470pF 10% 250V
C105	⚠ 1-113-894-11	s	CERAMIC 100pF 10% 250V
C106	⚠ 1-107-533-11	■	FILM 1uF 20% 250V
C107	⚠ 1-113-907-51	■	CERAMIC 0.0022uF 20% 250V
C108	⚠ 1-113-907-51	s	CERAMIC 0.0022uF 20% 250V
C109	⚠ 1-107-533-11	■	FILM 1uF 20% 250V
C110	1-104-708-11	s	FILM 0.47uF 20% 250V
C111	1-107-903-11	s	ELECT 2.2uF 20% 50V
C112	1-130-499-00	s	MYLAR 0.22uF 5% 50V
C113	⚠ 1-137-105-11	s	FILM 0.01uF 20% 250V
C114	1-107-903-11	■	ELECT 2.2uF 20% 50V
C115	1-107-903-11	s	ELECT 2.2uF 20% 50V
C116	1-107-533-11	s	FILM 1uF 20% 250V
C117	1-162-282-31	■	CERAMIC 100pF 10% 50V
C118	⚠ 1-113-907-51	s	CERAMIC 0.0022uF 20% 250V
C119	⚠ 1-107-533-11	s	FILM 1uF 20% 250V
C120	1-113-903-11	s	CERAMIC 0.001uF 20% 250V
C121	1-107-910-11	■	ELECT 100uF 20% 50V
C122	1-107-896-11	s	ELECT 470uF 20% 35V
C123	1-126-804-11	s	ELECT 100uF 20% 50V
C124	⚠ 1-113-894-11	s	CERAMIC 100pF 10% 250V
C125	⚠ 1-113-907-51	s	CERAMIC 0.0022uF 20% 250V
C126	1-104-800-11	s	ELECT 100uF 20% 100V
C127	1-125-601-11	s	ELECT 470uF 20% 450V
C128	1-125-601-11	s	ELECT 470uF 20% 450V
C129	1-125-601-11	s	ELECT 470uF 20% 450V
C130	1-125-601-11	s	ELECT 470uF 20% 450V
C131	⚠ 1-113-907-51	s	CERAMIC 0.0022uF 20% 250V
C132	1-107-909-11	s	ELECT 47uF 20% 50V
C133	⚠ 1-113-896-11	s	CERAMIC 220pF 10% 250V
C134	⚠ 1-113-896-11	s	CERAMIC 220pF 10% 250V
C135	1-130-483-00	s	MYLAR 0.01uF ■ 50V
C136	1-164-159-21	s	CERAMIC 0.1uF 50V
C137	1-136-899-11	s	MYLAR 0.47uF 5% 50V
C138	1-130-490-11	s	MYLAR 0.039uF 5% 50V
C139	1-107-909-11	s	ELECT 47uF 20% 50V
C140	1-130-483-00	s	MYLAR 0.01uF 5% 50V
C141	1-130-472-00	s	MYLAR 0.0012uF 5% 50V

(RE-122 BOARD(ES-7(UC/J)))

Ref. No. or Q'ty	Part No.	SP	Description
C142	1-162-292-31	s	CERAMIC 680pF 10% 50V
C143	1-162-282-31	s	CERAMIC 100pF 10% 50V
C144	1-162-292-31	■	CERAMIC 680pF 10% 50V
C145	1-130-495-00	s	MYLAR 0.1uF 5% 50V
C146	1-164-159-21	s	CERAMIC 0.1uF 50V
C147	⚠ 1-113-894-11	■	CERAMIC 100pF 10% 250V
C148	1-128-181-11	s	ELECT 10uF 20% 400V
C149	1-128-181-11	■	ELECT 10uF 20% 400V
C150	1-107-902-11	s	ELECT 1uF 20% 50V
C151	⚠ 1-113-894-11	s	CERAMIC 100pF 10% 250V
C152	⚠ 1-113-894-11	s	CERAMIC 100pF 10% 250V
C153	⚠ 1-113-894-11	s	CERAMIC 100pF 10% 250V
C154	1-164-159-21	s	CERAMIC 0.1uF 50V
C155	1-113-903-11	■	CERAMIC 0.001uF 20% 250V
C156	1-113-903-11	s	CERAMIC 0.001uF 20% 250V
C157	1-164-159-21	s	CERAMIC 0.1uF 50V
C158	1-113-903-11	s	CERAMIC 0.001uF 20% 250V
C159	1-126-105-11	s	ELECT 1000uF 20% 35V
C160	1-107-879-11	s	ELECT 3300uF 20% 10V
C161	1-107-879-11	s	ELECT 3300uF 20% 10V
C162	1-107-879-11	s	ELECT 3300uF 20% 10V
C163	1-107-879-11	s	ELECT 3300uF 20% 10V
C164	1-164-159-21	s	CERAMIC 0.1uF 50V
C165	1-164-159-21	s	CERAMIC 0.1uF 50V
C166	1-164-159-21	■	CERAMIC 0.1uF 50V
C167	1-107-896-11	■	ELECT 470uF 20% 35V
C168	1-107-896-11	s	ELECT 470uF 20% 35V
C169	1-130-495-00	■	MYLAR 0.1uF 5% 50V
C170	1-130-483-00	■	MYLAR 0.01uF 5% 50V
C171	1-126-105-11	s	ELECT 1000uF 20% 35V
C172	1-107-879-11	s	ELECT 3300uF 20% 10V
C173	1-164-159-21	s	CERAMIC 0.1uF 50V
C174	1-164-159-21	s	CERAMIC 0.1uF 50V
C175	1-164-159-21	s	CERAMIC 0.1uF 50V
C176	1-164-159-21	s	CERAMIC 0.1uF 50V
C177	1-107-879-11	s	ELECT 3300uF 20% 10V
C178	1-164-159-21	s	CERAMIC 0.1uF 50V
C179	1-164-159-21	■	CERAMIC 0.1uF 50V
C180	1-164-159-21	s	CERAMIC 0.1uF 50V
C181	1-107-896-11	s	ELECT 470uF 20% 35V
C182	1-107-896-11	s	ELECT 470uF 20% 35V
C183	1-130-483-00	s	MYLAR 0.01uF 5% 50V
C184	1-107-879-11	s	ELECT 3300uF 20% 10V
C185	1-164-159-21	s	CERAMIC 0.1uF 50V
C186	1-164-159-21	s	CERAMIC 0.1uF 50V
C187	1-164-159-21	■	CERAMIC 0.1uF 50V
C188	1-164-159-21	s	CERAMIC 0.1uF 50V
C189	1-107-879-11	s	ELECT 3300uF 20% 10V
C190	1-164-159-21	■	CERAMIC 0.1uF 50V
C191	1-164-159-21	s	CERAMIC 0.1uF 50V
C192	1-164-159-21	■	CERAMIC 0.1uF 50V
C193	1-107-896-11	s	ELECT 470uF 20% 35V
C194	1-107-896-11	s	ELECT 470uF 20% 35V
C195	1-130-495-00	s	MYLAR 0.1uF 5% 50V
C196	1-130-483-00	s	MYLAR 0.01uF 5% 50V
C197	1-126-105-11	s	ELECT 1000uF 20% 35V
C198	1-126-105-11	s	ELECT 1000uF 20% 35V
C199	1-164-159-21	s	CERAMIC 0.1uF 50V
C200	1-164-159-21	s	CERAMIC 0.1uF 50V

(RE-122 BOARD(ES-7(UC/J)))

Ref. No. or Q'ty	Part No.	SP	Description
C201	1-164-159-21	s	CERAMIC 0.1uF 50V
C202	1-164-159-21	s	CERAMIC 0.1uF 50V
C203	1-107-879-11	s	ELECT 3300uF 20% 10V
C204	1-164-159-21	s	CERAMIC 0.1uF 50V
C205	1-164-159-21	s	CERAMIC 0.1uF 50V
C206	1-164-159-21	s	CERAMIC 0.1uF 50V
C207	1-162-292-21	s	CERAMIC 680pF 10% 50V
C208	1-107-914-11	■	ELECT 1000uF 20% 50V
C209	1-107-902-11	■	ELECT 1uF 20% 50V
C210	1-107-914-11	s	ELECT 1000uF 20% 50V
C211	1-107-896-11	s	ELECT 470uF 20% 35V
C212	1-164-159-21	s	CERAMIC 0.1uF 50V
C213	1-164-159-21	s	CERAMIC 0.1uF 50V
C214	1-164-159-21	s	CERAMIC 0.1uF 50V
C215	1-164-159-21	■	CERAMIC 0.1uF 50V
C216	1-107-914-11	■	ELECT 1000uF 20% 50V
C217	1-164-159-21	s	CERAMIC 0.1uF 50V
C218	1-164-159-21	s	CERAMIC 0.1uF 50V
C219	1-164-159-21	s	CERAMIC 0.1uF 50V
C221	1-107-914-11	s	ELECT 1000uF 20% 50V
C222	1-107-903-11	s	ELECT 2.2uF 20% 50V
C223	1-107-902-11	s	ELECT 1uF 20% 50V
C224	1-107-903-11	s	ELECT 2.2uF 20% 50V
C225	1-107-914-11	s	ELECT 1000uF 20% 50V
C226	1-164-159-21	s	CERAMIC 0.1uF 50V
C227	1-164-159-21	s	CERAMIC 0.1uF 50V
C228	1-164-159-21	s	CERAMIC 0.1uF 50V
C229	1-164-159-21	s	CERAMIC 0.1uF 50V
C230	1-107-914-11	s	ELECT 1000uF 20% 50V
C231	1-164-159-21	s	CERAMIC 0.1uF 50V
C232	1-107-896-11	s	ELECT 470uF 20% 35V
C233	1-126-105-11	s	ELECT 1000uF 20% 35V
C234	1-164-159-21	s	CERAMIC 0.1uF 50V
C237	1-164-159-21	s	CERAMIC 0.1uF 50V
C238	1-104-708-11	■	FILM 0.47uF 20% 250V
C239	1-107-896-11	■	ELECT 470uF 20% 35V
C240	1-164-159-21	s	CERAMIC 0.1uF 50V
C249	1-128-181-11	s	ELECT 10uF 20% 400V
C300	⚠ 1-104-708-11	s	FILM 0.47uF 20% 250V
CN4	1-506-599-11	o	CONNECTOR, VH 10P, MALE
CN5	1-564-674-11	■	CONNECTOR 8P, MALE
CN6	1-560-362-00	■	CONNECTOR 10P, MALE
CN14	1-506-599-11	o	CONNECTOR, VH 10P, MALE
CN21	1-560-723-00	o	CONNECTOR 3P, MALE
CN22	1-560-753-11	o	CONNECTOR, MATE-N 5P, MALE
CN23	1-506-702-11	o	CONNECTOR, ILG 3P, MALE
CN24	1-506-702-11	o	CONNECTOR, ILG 3P, MALE
CN25	1-506-702-11	■	CONNECTOR, ILG 3P, MALE
CN26	1-506-702-11	■	CONNECTOR, ILG 3P, MALE
CN31	1-564-242-00	o	CONNECTOR, 5P
CN32	1-564-915-11	■	CONNECTOR, VH 7P, MALE
CN33	1-564-241-11	o	CONNECTOR, VH 4P, MALE
CN34	1-564-241-11	■	CONNECTOR, VH 4P, MALE
CN35	1-564-104-00	o	CONNECTOR, VH 3P, MALE
D10	8-719-987-63	s	DIODE 1N4148M
D100	8-719-313-16	s	DIODE AU02A
D101	8-719-500-27	s	DIODE S15VB60
D102	8-719-313-16	s	DIODE AU02A
D103	8-719-313-16	s	DIODE AU02A

(RE-122 BOARD(ES-7(UC/J)))

Ref. No. or Q'ty	Part No.	SP	Description
D104	8-719-160-75	s	DIODE RD22F-B2
D105	8-719-313-16	s	DIODE AU02A
D107	8-719-044-70	s	DIODE S16L60
D108	8-719-313-16	s	DIODE AU02A
D110	8-719-812-41	s	LED TLR124, RED
D111-115	8-719-313-16	■	DIODE AU02A
D116	8-719-980-78	s	DIODE ERA81-004
D117	8-719-987-63	s	DIODE 1N4148M
D118	8-719-980-78	s	DIODE ERA81-004
D119	8-719-110-03	■	DIODE RD7.5ES-B2
D120	8-719-980-78	s	DIODE ERA81-004
D121	8-719-119-23	s	DIODE RD33F-T7B2
D122	8-719-160-75	■	DIODE RD22F-B2
D123	8-719-980-78	■	DIODE ERA81-004
D124	8-719-981-38	s	DIODE ERC62M-004
D125	8-719-981-38	s	DIODE ERC62M-004
D126	8-719-981-38	s	DIODE ERC62M-004
D127	8-719-989-42	s	DIODE ERC80M-004
D128	8-719-989-42	s	DIODE ERC80M-004
D129	8-719-313-16	s	DIODE AU02A
D130	8-719-989-42	s	DIODE ERC80M-004
D131	8-719-160-75	s	DIODE RD22F-B2
D132	8-719-109-93	s	DIODE RD6.2ES-B2
D133	8-719-313-16	s	DIODE AU02A
D134	8-719-313-16	s	DIODE AU02A
D135	8-719-118-81	s	DIODE RD10F-T7B1
D136	8-719-109-60	s	DIODE RD2.7ES-B2
D137	8-719-119-23	s	DIODE RD33F-T7B2
F1	⚠ 1-533-708-11	■	FUSE 3A 250V
F2	⚠ 1-533-708-11	s	FUSE 3A 250V
F3	⚠ 1-576-260-51	s	FUSE 10A 125V
F4	⚠ 1-532-966-11	s	FUSE 5A 125V
F5	⚠ 1-532-966-11	s	FUSE 5A 125V
F6	⚠ 1-532-966-11	s	FUSE 5A 125V
F11	⚠ 1-533-708-11	■	FUSE 3A 250V
F100	⚠ 1-532-496-00	s	FUSE, THERMAL 109-DEG-C 10A 250V
FB101	1-543-778-11	s	BEAD, FERRITE
FL101-105	1-421-773-11	s	FILTER, NOISE
IC101	8-759-045-38	s	IC MC14538BCP
IC103	8-759-000-18	s	IC MC14002BCP
IC104	8-759-031-98	s	IC MC14001UBCP
IC105	⚠ 8-749-923-48	s	PHOTO-COUPLER PC817Y2
IC106	8-719-800-42	s	PHOTO-TRANSISTOR TP521-1-A
IC107	8-719-800-42	■	PHOTO-TRANSISTOR TP521-1-A
IC108	8-759-916-12	s	IC SN74HC00N
IC109	8-759-191-54	s	IC UC3854N
IC110	8-749-923-48	s	PHOTO-COUPLER PC817Y2
IC111	⚠ 1-473-441-11	s	CONVERTER, DC-DC
IC112	⚠ 1-473-465-11	s	CONVERTER, DC-DC
IC113	⚠ 1-473-739-11	s	CONVERTER, DC-DC
IC114	8-759-192-65	s	IC LT1074CT
IC115	8-759-192-65	s	IC LT1074CT
IC116	8-759-192-65	s	IC LT1074CT
IC117	8-759-505-30	■	IC LT1171CT
IC118	8-759-505-30	■	IC LT1171CT
IC119	8-759-929-65	s	IC LM7912CT

(RE-122 BOARD(ES-7(UC/J)))

Ref. No. or Q'ty	Part No.	SP	Description
IC120	8-759-512-71	s	IC S-8054HNM
IC121	8-759-512-71	s	IC S-8054HNM
IC122	8-749-923-48	s	PHOTO-COUPLER PC817Y2
L100 ⚠	1-421-779-11	s	FILTER, LINE
L101 ⚠	1-421-779-11	s	FILTER, LINE
L102 ⚠	1-409-523-11	s	COIL, CHOKE 168uH
L103	1-411-998-11	s	COIL, CHOKE 750uH
L104	1-421-564-00	■	FILTER, LINE
L106	1-421-564-00	o	FILTER, LINE
L107	1-412-047-11	s	COIL, CHOKE 45uH
L108	1-409-342-00	■	COIL, CHOKE 12uH
L109	1-421-564-00	o	FILTER, LINE
L110	1-421-564-00	■	FILTER, LINE
L111	1-412-019-11	s	COIL, CHOKE
L112	1-421-564-00	■	FILTER, LINE
L113	1-421-564-00	o	FILTER, LINE
L114	1-412-047-11	■	COIL, CHOKE 45uH
L115	1-409-342-00	s	COIL, CHOKE 12uH
L116	1-421-564-00	o	FILTER, LINE
L117	1-424-135-11	s	FILTER, LINE
L118	1-412-019-11	s	COIL, CHOKE
L119	1-409-342-00	s	COIL, CHOKE 12uH
L120	1-424-135-11	s	FILTER, LINE
L121	1-424-135-11	s	FILTER, LINE
L122	1-412-019-11	s	COIL, CHOKE
L123	1-424-135-11	s	FILTER, LINE
L202 ⚠	1-409-523-11	s	COIL, CHOKE 168uH
Q100	8-729-029-73	s	TRANSISTOR DTC114YSA-TP
Q101	8-729-029-73	s	TRANSISTOR DTC114YSA-TP
Q102	8-729-024-28	s	TRANSISTOR 2SK2234
Q103	8-729-024-28	■	TRANSISTOR 2SK2234
Q104	8-729-024-28	s	TRANSISTOR 2SK2234
Q105	8-729-024-28	s	TRANSISTOR 2SK2234
Q106	8-729-119-78	s	TRANSISTOR 2SC2785-HFE
Q110	8-729-119-78	s	TRANSISTOR 2SC2785-HFE
Q111	8-729-119-78	s	TRANSISTOR 2SC2785-HFE
Q112	8-729-029-73	s	TRANSISTOR DTC114YSA-TP
Q113	8-729-029-73	s	TRANSISTOR DTC114YSA-TP
Q114	8-729-029-73	s	TRANSISTOR DTC114YSA-TP
Q115	8-729-809-29	s	TRANSISTOR 2SC4159-E
R101	1-214-937-00	s	METAL 1M 1% 1/2W
R102	1-249-429-11	s	CARBON 10k 5% 1/4W
R103	1-249-429-11	s	CARBON 10k 5% 1/4W
R104	1-249-429-11	s	CARBON 10k 5% 1/4W
R105	1-249-429-11	s	CARBON 10k 5% 1/4W
R110	1-247-899-11	s	CARBON 680k 5% 1/4W
R111	1-249-437-11	s	CARBON 47k 5% 1/4W
R112	1-249-425-11	s	CARBON 4.7k 5% 1/4W
R113	1-249-425-11	s	CARBON 4.7k 5% 1/4W
R114	1-249-413-11	s	CARBON 470 5% 1/4W
R115	1-249-417-11	s	CARBON 1k 5% 1/4W
R116	1-249-417-11	■	CARBON 1k 5% 1/4W
R117	1-249-413-11	s	CARBON 470 5% 1/4W
R118	1-214-937-00	s	METAL 1M 1% 1/2W
R119	1-215-863-11	s	METAL 100 5% 1W
R120	1-208-603-11	■	WIREWOUND 0.1 10% 5W
R121	1-208-603-11	s	WIREWOUND 0.1 10% 5W
R122	1-208-603-11	s	WIREWOUND 0.1 10% 5W

(RE-122 BOARD(ES-7(UC/J)))

Ref. No. or Q'ty	Part No.	SP	Description
R123	1-208-603-11	s	WIREWOUND 0.1 10% 5W
R124	1-215-926-00	s	METAL 33k 5% 3W
R125	1-208-603-11	s	WIREWOUND 0.1 10% 5W
R126	1-208-603-11	s	WIREWOUND 0.1 10% 5W
R127	1-214-824-11	s	METAL 22 1% 1/2W
R128	1-214-824-11	s	METAL 22 1% 1/2W
R129	1-214-824-11	s	METAL 22 1% 1/2W
R130	1-214-824-11	s	METAL 22 1% 1/2W
R131	1-215-913-11	s	METAL 220 5% 3W
R132	1-214-930-11	s	METAL 510k 1% 1/2W
R133	1-215-445-00	s	METAL 10k 1% 1/6W
R134	1-205-902-21	s	WIREWOUND 12 5% 20W
R135	1-215-928-11	s	METAL 68k 5% 3W
R136	1-215-928-11	s	METAL 68k 5% 3W
R138	1-214-937-00	s	METAL 1M 1% 1/2W
R139	1-215-469-00	s	METAL 100k 1% 1/6W
R140	1-215-488-00	s	METAL 620k 1% 1/6W
R141	1-215-397-00	s	METAL 100 1% 1/6W
R142	1-215-453-00	s	METAL 22k 1% 1/6W
R143	1-215-479-00	■	METAL 270k 1% 1/6W
R144	1-215-473-00	s	METAL 150k 1% 1/6W
R145	1-215-434-00	s	METAL 3.6k 1% 1/6W
R146	1-215-434-00	s	METAL 3.6k 1% 1/6W
R147	1-215-445-00	s	METAL 10k 1% 1/6W
R148	1-215-451-00	s	METAL 18k 1% 1/6W
R149	1-215-423-00	s	METAL 1.2k 1% 1/6W
R150	1-215-445-00	■	METAL 10k 1% 1/6W
R151	1-214-832-00	s	METAL 47 1% 1/2W
R152	1-247-863-91	s	CARBON 22k 1/4W
R153	1-249-393-11	s	CARBON 10 5% 1/4W
R154	1-215-465-00	■	METAL 68k 1% 1/6W
R155	1-215-921-11	s	METAL 4.7k 3W
R157	1-215-477-00	■	METAL 220k 1% 1/6W
R158	1-215-493-00	s	METAL 1M 1% 1/6W
R160	1-215-438-00	s	METAL 5.1k 1% 1/6W
R161	1-215-445-00	s	METAL 10k 1% 1/6W
R162	1-215-431-00	■	METAL 2.7k 1/6W
R163	1-215-426-00	s	METAL 1.6k 1% 1/6W
R164	1-215-431-00	s	METAL 2.7k 1% 1/6W
R165	1-215-436-00	s	METAL 4.3k 1% 1/6W
R166	1-215-429-00	s	METAL 2.2k 1% 1/6W
R167	1-215-445-00	■	METAL 10k 1% 1/6W
R168	1-215-452-00	s	METAL 20k 1% 1/6W
R169	1-215-438-00	s	METAL 5.1k 1% 1/6W
R170	1-215-427-00	s	METAL 1.8k 1% 1/6W
R171	1-215-421-00	■	METAL 1k 1% 1/6W
R172	1-215-453-00	s	METAL 22k 1% 1/6W
R173	1-215-426-00	s	METAL 1.6k 1% 1/6W
R174	1-215-867-00	s	METAL 470 1W
R175	1-215-421-00	s	METAL 1k 1% 1/6W
R176	1-215-453-00	s	METAL 22k 1% 1/6W
R177	1-215-426-00	s	METAL 1.6k 1% 1/6W
R178	1-249-401-11	s	CARBON 47 5% 1/4W
R179	1-215-868-00	■	METAL 680 5% 1W
R180	1-249-413-11	■	CARBON 470 5% 1/4W
R181	1-214-840-00	s	METAL 100 1% 1/2W
R182	1-214-937-00	s	METAL 1M 1% 1/2W
R183	1-215-867-00	s	METAL 470 5% 1W
R184	1-249-425-11	s	CARBON 4.7k 5% 1/4W

(RE-122 BOARD(ES-7(UC/J)))

Ref. No. or Q'ty	Part No.	SP	Description
R185	1-216-349-00	s	METAL 1 5% 1W
R186	1-249-429-11	■	CARBON 10k 5% 1/4W
R187	1-247-903-00	■	CARBON 1M 5% 1/4W
R188	1-215-863-11	s	METAL 100 5% 1W
R189	1-215-859-00	s	METAL 22 5% 1W
R190	1-208-603-11	s	WIREWOUND 0.1 10% 5W
R191	1-208-603-11	s	WIREWOUND 0.1 10% 5W
R192	1-247-863-91	s	CARBON 22k ■ 1/4W
R193	1-247-863-91	■	CARBON 22k 5% 1/4W
R194	1-247-863-91	s	CARBON 22k 5% 1/4W
R195	1-247-863-91	s	CARBON 22k 5% 1/4W
R196	1-215-445-00	s	METAL 10k 1% 1/6W
R197	1-215-469-00	s	METAL 100k 1% 1/6W
R198	1-215-913-11	s	METAL 220 5% 3W
R199	1-215-869-11	s	METAL 1.0k 5% 1W
R200	1-215-869-11	s	METAL 1.0k 5% 1W
R201	1-215-429-00	s	METAL 2.2k 1% 1/6W
R202	1-215-441-00	s	METAL 6.8k 1% 1/6W
R203	1-215-447-00	s	METAL 12k 1% 1/6W
R204	1-215-429-00	s	METAL 2.2k 1% 1/6W
R205	1-215-447-00	s	METAL 12k 1% 1/6W
R206	1-215-437-00	s	METAL 4.7k 1% 1/6W
R207	1-215-461-00	s	METAL 47k 1% 1/6W
R208	1-215-447-00	■	METAL 12k 1% 1/6W
R209	1-215-461-00	s	METAL 47k 1% 1/6W
R210	1-215-921-11	s	METAL 4.7k 5% 3W
R211	1-249-435-11	s	CARBON 33k ■ 1/4W
R212	1-215-397-00	s	METAL 100 1% 1/6W
R213	1-249-429-11	s	CARBON 10k 5% 1/4W
RY100 ⚠	1-515-685-31	s	RELAY
RY101 ⚠	1-515-542-21	s	RELAY
VDR100	1-806-356-00	s	VARISTOR ENB461-10A
VDR101	1-806-356-00	s	VARISTOR ENB461-10A

RE-122A BOARD(ES-7(CE))

Ref. No. or Q'ty	Part No.	SP	Description
1pc	A-8311-628-A	o	MOUNTED CIRCUIT BOARD, RE-122A
6pcs	7-682-549-04	s	SCREW +B 3x10
1pc	3-179-163-01	o	HEAT SINK
1pc	3-172-778-01	s	PAD, THERMAL
6pcs	7-682-950-01	s	SCREW +PSW 3x12
1pc	3-179-163-01	■	HEAT SINK
1pc	3-172-778-01	s	PAD, THERMAL
6pcs	7-682-950-01	■	SCREW +PSW 3x12
1pc	3-172-778-01	s	PAD, THERMAL
6pcs	7-682-950-01	s	SCREW +PSW 3x12
4pcs	7-682-549-04	s	SCREW +B 3x10
1pc	7-684-023-04	s	■ 3, TYPE 2
1pc	7-682-549-04	s	SCREW +B 3x10
1pc	7-684-023-04	■	N 3, TYPE 2
2pcs	7-682-549-04	s	SCREW +B 3x10
1pc	7-682-565-04	s	SCREW +B 4x16
C100 ⚠	1-113-900-11	s	CERAMIC 470pF 10% 250V
C101 ⚠	1-113-900-11	s	CERAMIC 470pF 10% 250V
C102 ⚠	1-113-900-11	s	CERAMIC 470pF 10% 250V
C103 ⚠	1-113-900-11	s	CERAMIC 470pF 10% 250V
C104 ⚠	1-113-900-11	■	CERAMIC 470pF 10% 250V
C105 ⚠	1-113-894-11	s	CERAMIC 100pF 10% 250V
C106 ⚠	1-107-533-11	s	FILM 1uF 20% 250V
C107 ⚠	1-113-907-51	s	CERAMIC 0.0022uF 20% 250V
C108 ⚠	1-113-907-51	s	CERAMIC 0.0022uF 20% 250V
C109 ⚠	1-107-533-11	s	FILM 1uF 20% 250V
C110	1-104-708-11	s	FILM 0.47uF 20% 250V
C111	1-107-903-11	s	ELECT 2.2uF 20% 50V
C112	1-130-499-00	s	MYLAR 0.22uF 5% 50V
C113 ⚠	1-137-105-11	s	FILM 0.01uF 20% 250V
C114	1-107-903-11	s	ELECT 2.2uF 20% 50V
C115	1-107-903-11	s	ELECT 2.2uF 20% 50V
C116	1-107-533-11	s	FILM 1uF 20% 250V
C117	1-162-282-31	s	CERAMIC 100pF 10% 50V
C118 ⚠	1-113-907-51	s	CERAMIC 0.0022uF 20% 250V
C119 ⚠	1-107-533-11	s	FILM 1uF 20% 250V
C120	1-113-903-11	s	CERAMIC 0.001uF 20% 250V
C121	1-107-910-11	s	ELECT 100uF 20% 50V
C122	1-107-896-11	s	ELECT 470uF 20% 35V
C123	1-126-804-11	s	ELECT 100uF 20% 50V
C124 ⚠	1-113-894-11	s	CERAMIC 100pF 10% 250V
C125 ⚠	1-113-907-51	s	CERAMIC 0.0022uF 20% 250V
C126	1-104-800-11	s	ELECT 100uF 20% 100V
C127	1-125-601-11	■	ELECT 470uF 20% 450V
C128	1-125-601-11	s	ELECT 470uF 20% 450V
C129	1-125-601-11	s	ELECT 470uF 20% 450V
C130	1-125-601-11	s	ELECT 470uF 20% 450V
C131 ⚠	1-113-907-51	s	CERAMIC 0.0022uF 20% 250V
C132	1-107-909-11	s	ELECT 47uF 20% 50V
C133 ⚠	1-113-896-11	■	CERAMIC 220pF 10% 250V
C134 ⚠	1-113-896-11	s	CERAMIC 220pF 10% 250V
C135	1-130-483-00	s	MYLAR 0.01uF 5% 50V
C136	1-164-159-21	s	CERAMIC 0.1uF 50V
C137	1-136-899-11	s	MYLAR 0.47uF ■ 50V
C138	1-130-490-11	s	MYLAR 0.039uF 5% 50V
C139	1-107-909-11	s	ELECT 47uF 20% 50V
C140	1-130-483-00	s	MYLAR 0.01uF ■ 50V
C141	1-130-472-00	s	MYLAR 0.0012uF 5% 50V

(RE-122A BOARD(ES-7(CE)))

Ref. No. or Q'ty		Part No.	SP	Description
C142		1-162-292-31	s	CERAMIC 680pF 10% 50V
C143		1-162-282-31	s	CERAMIC 100pF 10% 50V
C144		1-162-292-31	■	CERAMIC 680pF 10% 50V
C145		1-130-495-00	s	MYLAR 0.1uF 5% 50V
C146		1-164-159-21	s	CERAMIC 0.1uF 50V
C147	⚠	1-113-894-11	s	CERAMIC 100pF 10% 250V
C148		1-128-181-11	s	ELECT 10uF 20% 400V
C149		1-128-181-11	s	ELECT 10uF 20% 400V
C150		1-107-902-11	s	ELECT 1uF 20% 50V
C151	⚠	1-113-894-11	s	CERAMIC 100pF 10% 250V
C152	⚠	1-113-894-11	s	CERAMIC 100pF 10% 250V
C153	⚠	1-113-894-11	s	CERAMIC 100pF 10% 250V
C154		1-164-159-21	■	CERAMIC 0.1uF 50V
C155		1-113-903-11	s	CERAMIC 0.001uF 20% 250V
C156		1-113-903-11	s	CERAMIC 0.001uF 20% 250V
C157		1-164-159-21	s	CERAMIC 0.1uF 50V
C158		1-113-903-11	s	CERAMIC 0.001uF 20% 250V
C159		1-126-105-11	s	ELECT 1000uF 20% 35V
C160		1-107-879-11	s	ELECT 3300uF 20% 10V
C161		1-107-879-11	s	ELECT 3300uF 20% 10V
C162		1-107-879-11	s	ELECT 3300uF 20% 10V
C163		1-107-879-11	s	ELECT 3300uF 20% 10V
C164		1-164-159-21	s	CERAMIC 0.1uF 50V
C165		1-164-159-21	s	CERAMIC 0.1uF 50V
C166		1-164-159-21	s	CERAMIC 0.1uF 50V
C167		1-107-896-11	s	ELECT 470uF 20% 35V
C168		1-107-896-11	s	ELECT 470uF 20% 35V
C169		1-130-495-00	s	MYLAR 0.1uF 5% 50V
C170		1-130-483-00	s	MYLAR 0.01uF ■ 50V
C171		1-126-105-11	s	ELECT 1000uF 20% 35V
C172		1-107-879-11	s	ELECT 3300uF 20% 10V
C173		1-164-159-21	■	CERAMIC 0.1uF 50V
C174		1-164-159-21	s	CERAMIC 0.1uF 50V
C175		1-164-159-21	s	CERAMIC 0.1uF 50V
C176		1-164-159-21	s	CERAMIC 0.1uF 50V
C177		1-107-879-11	s	ELECT 3300uF 20% 10V
C178		1-164-159-21	s	CERAMIC 0.1uF 50V
C179		1-164-159-21	s	CERAMIC 0.1uF 50V
C180		1-164-159-21	s	CERAMIC 0.1uF 50V
C181		1-107-896-11	s	ELECT 470uF 20% 35V
C182		1-107-896-11	s	ELECT 470uF 20% 35V
C183		1-130-483-00	s	MYLAR 0.01uF 5% 50V
C184		1-107-879-11	s	ELECT 3300uF 20% 10V
C185		1-164-159-21	s	CERAMIC 0.1uF 50V
C186		1-164-159-21	s	CERAMIC 0.1uF 50V
C187		1-164-159-21	s	CERAMIC 0.1uF 50V
C188		1-164-159-21	s	CERAMIC 0.1uF 50V
C189		1-107-879-11	s	ELECT 3300uF 20% 10V
C190		1-164-159-21	s	CERAMIC 0.1uF 50V
C191		1-164-159-21	s	CERAMIC 0.1uF 50V
C192		1-164-159-21	s	CERAMIC 0.1uF 50V
C193		1-107-896-11	s	ELECT 470uF 20% 35V
C194		1-107-896-11	s	ELECT 470uF 20% 35V
C195		1-130-495-00	s	MYLAR 0.1uF 5% 50V
C196		1-130-483-00	s	MYLAR 0.01uF 5% 50V
C197		1-126-105-11	s	ELECT 1000uF 20% 35V
C198		1-126-105-11	s	ELECT 1000uF 20% 35V
C199		1-164-159-21	s	CERAMIC 0.1uF 50V
C200		1-164-159-21	s	CERAMIC 0.1uF 50V

(RE-122A BOARD(ES-7(CE)))

Ref. No. or Q'ty		Part No.	SP	Description
C201		1-164-159-21	s	CERAMIC 0.1uF 50V
C202		1-164-159-21	■	CERAMIC 0.1uF 50V
C203		1-107-879-11	s	ELECT 3300uF 20% 10V
C204		1-164-159-21	s	CERAMIC 0.1uF 50V
C205		1-164-159-21	■	CERAMIC 0.1uF 50V
C206		1-164-159-21	s	CERAMIC 0.1uF 50V
C207		1-162-292-21	■	CERAMIC 680pF 10% 50V
C208		1-107-914-11	s	ELECT 1000uF 20% 50V
C209		1-107-902-11	s	ELECT 1uF 20% 50V
C210		1-107-914-11	s	ELECT 1000uF 20% 50V
C211		1-107-896-11	s	ELECT 470uF 20% 35V
C212		1-164-159-21	s	CERAMIC 0.1uF 50V
C213		1-164-159-21	■	CERAMIC 0.1uF 50V
C214		1-164-159-21	s	CERAMIC 0.1uF 50V
C215		1-164-159-21	s	CERAMIC 0.1uF 50V
C216		1-107-914-11	s	ELECT 1000uF 20% 50V
C217		1-164-159-21	s	CERAMIC 0.1uF 50V
C218		1-164-159-21	s	CERAMIC 0.1uF 50V
C219		1-164-159-21	s	CERAMIC 0.1uF 50V
C221		1-107-914-11	■	ELECT 1000uF 20% 50V
C222		1-107-903-11	s	ELECT 2.2uF 20% 50V
C223		1-107-902-11	■	ELECT 1uF 20% 50V
C224		1-107-903-11	s	ELECT 2.2uF 20% 50V
C225		1-107-914-11	s	ELECT 1000uF 20% 50V
C226		1-164-159-21	s	CERAMIC 0.1uF 50V
C227		1-164-159-21	s	CERAMIC 0.1uF 50V
C228		1-164-159-21	s	CERAMIC 0.1uF 50V
C229		1-164-159-21	s	CERAMIC 0.1uF 50V
C230		1-107-914-11	■	ELECT 1000uF 20% 50V
C231		1-164-159-21	s	CERAMIC 0.1uF 50V
C232		1-107-896-11	s	ELECT 470uF 20% 35V
C233		1-126-105-11	s	ELECT 1000uF 20% 35V
C234		1-164-159-21	s	CERAMIC 0.1uF 50V
C237		1-164-159-21	s	CERAMIC 0.1uF 50V
C238		1-104-708-11	■	FILM 0.47uF 20% 250V
C239		1-107-896-11	s	ELECT 470uF 20% 35V
C240		1-164-159-21	s	CERAMIC 0.1uF 50V
C249		1-128-181-11	s	ELECT 10uF 20% 400V
C300	⚠	1-104-708-11	s	FILM 0.47uF 20% 250V
CN4		1-506-599-11	o	CONNECTOR, VH 10P, MALE
CN5		1-564-674-11	■	CONNECTOR 8P, MALE
CN6		1-560-362-00	o	CONNECTOR 10P, MALE
CN14		1-506-599-11	o	CONNECTOR, VH 10P, MALE
CN21		1-560-723-00	o	CONNECTOR 3P, MALE
CN22		1-560-753-11	o	CONNECTOR, MATE-N 5P, MALE
CN23		1-506-702-11	o	CONNECTOR, ILG 3P, MALE
CN24		1-506-702-11	■	CONNECTOR, ILG 3P, MALE
CN25		1-506-702-11	■	CONNECTOR, ILG 3P, MALE
CN26		1-506-702-11	o	CONNECTOR, ILG 3P, MALE
CN31		1-564-242-00	o	CONNECTOR, 5P
CN32		1-564-915-11	o	CONNECTOR, VH 7P, MALE
CN33		1-564-241-11	o	CONNECTOR, VH 4P, MALE
CN34		1-564-241-11	o	CONNECTOR, VH 4P, MALE
CN35		1-564-104-00	o	CONNECTOR, VH 3P, MALE
D10		8-719-987-63	s	DIODE 1N4148M
D100		8-719-313-16	s	DIODE AU02A
D101		8-719-500-27	s	DIODE S15VB60
D102		8-719-313-16	■	DIODE AU02A
D103		8-719-313-16	s	DIODE AU02A

(RE-122A BOARD(ES-7(CE)))

Ref. No. or Q'ty	Part No.	SP	Description
D104	8-719-160-75	s	DIODE RD22F-B2
D105	8-719-313-16	s	DIODE AU02A
D107	8-719-044-70	■	DIODE S16L60
D108	8-719-313-16	■	DIODE AU02A
D110	8-719-812-41	s	LED TLR124, RED
D111-115	8-719-313-16	■	DIODE AU02A
D116	8-719-980-78	s	DIODE ERA81-004
D117	8-719-987-63	s	DIODE 1N4148M
D118	8-719-980-78	s	DIODE ERA81-004
D119	8-719-110-03	■	DIODE RD7.5ES-B2
D120	8-719-980-78	s	DIODE ERA81-004
D121	8-719-119-23	s	DIODE RD33F-T7B2
D122	8-719-160-75	s	DIODE RD22F-B2
D123	8-719-980-78	s	DIODE ERA81-004
D124	8-719-981-38	s	DIODE ERC62M-004
D125	8-719-981-38	s	DIODE ERC62M-004
D126	8-719-981-38	■	DIODE ERC62M-004
D127	8-719-989-42	s	DIODE ERC80M-004
D128	8-719-989-42	s	DIODE ERC80M-004
D129	8-719-313-16	s	DIODE AU02A
D130	8-719-989-42	■	DIODE ERC80M-004
D131	8-719-160-75	■	DIODE RD22F-B2
D132	8-719-109-93	s	DIODE RD6.2ES-B2
D133	8-719-313-16	s	DIODE AU02A
D134	8-719-313-16	s	DIODE AU02A
D135	8-719-118-81	s	DIODE RD10F-T7B1
D136	8-719-109-60	■	DIODE RD2.7ES-B2
D137	8-719-119-23	s	DIODE RD33F-T7B2
F1	⚠ 1-533-708-11	■	FUSE 3A 250V
F2	⚠ 1-533-708-11	s	FUSE 3A 250V
F3	⚠ 1-576-260-51	s	FUSE 10A 125V
F4	⚠ 1-532-966-11	s	FUSE 5A 125V
F5	⚠ 1-532-966-11	s	FUSE 5A 125V
F6	⚠ 1-532-966-11	s	FUSE 5A 125V
F11	⚠ 1-533-708-11	s	FUSE 3A 250V
F100	⚠ 1-532-496-00	s	FUSE, THERMAL 109-DEG-C 10A 250V
FB101	1-543-778-11	s	BEAD, FERRITE
FL101-105	1-421-773-11	s	FILTER, NOISE
IC101	8-759-045-38	s	IC MC14538BCP
IC103	8-759-000-18	s	IC MC14002BCP
IC104	8-759-031-98	s	IC MC14001UBCP
IC105	⚠ 8-749-923-48	s	PHOTO-COUPLER PC817Y2
IC106	8-719-800-42	s	PHOTO-TRANSISTOR TP521-1-A
IC107	8-719-800-42	s	PHOTO-TRANSISTOR TP521-1-A
IC108	8-759-916-12	s	IC SN74HC00N
IC109	8-759-191-54	s	IC UC3854N
IC110	8-749-923-48	s	PHOTO-COUPLER PC817Y2
IC111	⚠ 1-473-441-11	s	CONVERTER, DC-DC
IC112	⚠ 1-473-465-11	s	CONVERTER, DC-DC
IC113	⚠ 1-473-739-11	s	CONVERTER, DC-DC
IC114	8-759-192-65	s	IC LT1074CT
IC115	8-759-192-65	s	IC LT1074CT
IC116	8-759-192-65	s	IC LT1074CT
IC117	8-759-505-30	s	IC LT1171CT
IC118	8-759-505-30	s	IC LT1171CT
IC119	8-759-929-65	s	IC LM7912CT

(RE-122A BOARD(ES-7(CE)))

Ref. No. or Q'ty	Part No.	SP	Description
IC120	8-759-512-71	s	IC S-8054HNM
IC121	8-759-512-71	■	IC S-8054HNM
IC122	8-749-923-48	s	PHOTO-COUPLER PC817Y2
L100	⚠ 1-421-944-31	s	FILTER, LINE
L101	⚠ 1-421-944-31	■	FILTER, LINE
L102	⚠ 1-409-523-11	s	COIL, CHOKE 168uH
L103	1-411-998-11	s	COIL, CHOKE 750uH
L104	1-421-564-00	o	FILTER, LINE
L106	1-421-564-00	o	FILTER, LINE
L107	1-412-047-11	s	COIL, CHOKE 45uH
L108	1-409-342-00	■	COIL, CHOKE 12uH
L109	1-421-564-00	o	FILTER, LINE
L110	1-421-564-00	o	FILTER, LINE
L111	1-412-019-11	■	COIL, CHOKE
L112	1-421-564-00	o	FILTER, LINE
L113	1-421-564-00	■	FILTER, LINE
L114	1-412-047-11	s	COIL, CHOKE 45uH
L115	1-409-342-00	■	COIL, CHOKE 12uH
L116	1-421-564-00	o	FILTER, LINE
L117	1-424-135-11	■	FILTER, LINE
L118	1-412-019-11	s	COIL, CHOKE
L119	1-409-342-00	s	COIL, CHOKE 12uH
L120	1-424-135-11	s	FILTER, LINE
L121	1-424-135-11	s	FILTER, LINE
L122	1-412-019-11	■	COIL, CHOKE
L123	1-424-135-11	s	FILTER, LINE
L202	⚠ 1-409-523-11	s	COIL, CHOKE 168uH
Q100	8-729-029-73	s	TRANSISTOR DTC114YSA-TP
Q101	8-729-029-73	s	TRANSISTOR DTC114YSA-TP
Q102	8-729-024-28	■	TRANSISTOR 2SK2234
Q103	8-729-024-28	s	TRANSISTOR 2SK2234
Q104	8-729-024-28	s	TRANSISTOR 2SK2234
Q105	8-729-024-28	s	TRANSISTOR 2SK2234
Q106	8-729-119-78	s	TRANSISTOR 2SC2785-HFE
Q110	8-729-119-78	s	TRANSISTOR 2SC2785-HFE
Q111	8-729-119-78	s	TRANSISTOR 2SC2785-HFE
Q112	8-729-029-73	s	TRANSISTOR DTC114YSA-TP
Q113	8-729-029-73	■	TRANSISTOR DTC114YSA-TP
Q114	8-729-029-73	■	TRANSISTOR DTC114YSA-TP
Q115	8-729-809-29	s	TRANSISTOR 2SC4159-E
R101	1-214-937-00	s	METAL 1M 1% 1/2W
R102	1-249-429-11	s	CARBON 10k 5% 1/4W
R103	1-249-429-11	s	CARBON 10k 5% 1/4W
R104	1-249-429-11	■	CARBON 10k 5% 1/4W
R105	1-249-429-11	s	CARBON 10k 5% 1/4W
R110	1-247-899-11	s	CARBON 680k 5% 1/4W
R111	1-249-437-11	■	CARBON 47k 5% 1/4W
R112	1-249-425-11	s	CARBON 4.7k 5% 1/4W
R113	1-249-425-11	s	CARBON 4.7k 5% 1/4W
R114	1-249-413-11	s	CARBON 470 5% 1/4W
R115	1-249-417-11	s	CARBON 1k 5% 1/4W
R116	1-249-417-11	s	CARBON 1k 5% 1/4W
R117	1-249-413-11	■	CARBON 470 5% 1/4W
R118	1-214-937-00	s	METAL 1M 1% 1/2W
R119	1-215-863-11	s	METAL 100 5% 1W
R120	1-208-603-11	s	WIREWOUND 0.1 10% 5W
R121	1-208-603-11	s	WIREWOUND 0.1 10% 5W
R122	1-208-603-11	■	WIREWOUND 0.1 10% 5W

(RE-122A BOARD(ES-7(CE)))

Ref. No. or Q'ty	Part No.	SP	Description
R123	1-208-603-11	s	WIREWOUND 0.1 10% 5W
R124	1-215-926-00	s	METAL 33k 5% 3W
R125	1-208-603-11	s	WIREWOUND 0.1 10%
R126	1-208-603-11	s	WIREWOUND 0.1 10% 5W
R127	1-214-824-11	s	METAL 22 1% 1/2W
R128	1-214-824-11	s	METAL 22 1% 1/2W
R129	1-214-824-11	s	METAL 22 1% 1/2W
R130	1-214-824-11	s	METAL 22 1% 1/2W
R131	1-215-913-11	s	METAL 220 5% 3W
R132	1-214-930-11	s	METAL 510k 1% 1/2W
R133	1-215-445-00	s	METAL 10k 1% 1/6W
R134	1-205-902-21	s	WIREWOUND 12 5% 20W
R135	1-215-928-11	s	METAL 68k 5% 3W
R136	1-215-928-11	s	METAL 68k 3W
R138	1-214-937-00	s	METAL 1M 1% 1/2W
R139	1-215-469-00	s	METAL 100k 1% 1/6W
R140	1-215-488-00	s	METAL 620k 1% 1/6W
R141	1-215-397-00	s	METAL 100 1% 1/6W
R142	1-215-453-00	s	METAL 22k 1% 1/6W
R143	1-215-479-00	s	METAL 270k 1% 1/6W
R144	1-215-473-00	s	METAL 150k 1% 1/6W
R145	1-215-434-00	s	METAL 3.6k 1% 1/6W
R146	1-215-434-00	s	METAL 3.6k 1% 1/6W
R147	1-215-445-00	▪	METAL 10k 1% 1/6W
R148	1-215-451-00	▪	METAL 18k 1% 1/6W
R149	1-215-423-00	▪	METAL 1.2k 1% 1/6W
R150	1-215-445-00	s	METAL 10k 1% 1/6W
R151	1-214-832-00	s	METAL 47 1% 1/2W
R152	1-247-863-91	▪	CARBON 22k 5% 1/4W
R153	1-249-393-11	s	CARBON 10 1/4W
R154	1-215-465-00	s	METAL 68k 1% 1/6W
R155	1-215-921-11	s	METAL 4.7k 5% 3W
R157	1-215-477-00	s	METAL 220k 1% 1/6W
R158	1-215-493-00	s	METAL 1/6W
R160	1-215-438-00	s	METAL 5.1k 1% 1/6W
R161	1-215-445-00	s	METAL 10k 1% 1/6W
R162	1-215-431-00	s	METAL 2.7k 1% 1/6W
R163	1-215-426-00	s	METAL 1.6k 1% 1/6W
R164	1-215-431-00	s	METAL 2.7k 1% 1/6W
R165	1-215-436-00	s	METAL 4.3k 1% 1/6W
R166	1-215-429-00	s	METAL 2.2k 1% 1/6W
R167	1-215-445-00	s	METAL 10k 1% 1/6W
R168	1-215-452-00	▪	METAL 20k 1% 1/6W
R169	1-215-438-00	s	METAL 5.1k 1% 1/6W
R170	1-215-427-00	s	METAL 1.8k 1% 1/6W
R171	1-215-421-00	s	METAL 1k 1% 1/6W
R172	1-215-453-00	s	METAL 22k 1% 1/6W
R173	1-215-426-00	s	METAL 1.6k 1% 1/6W
R174	1-215-867-00	s	METAL 470 5% 1W
R175	1-215-421-00	s	METAL 1k 1% 1/6W
R176	1-215-453-00	s	METAL 22k 1% 1/6W
R177	1-215-426-00	s	METAL 1.6k 1% 1/6W
R178	1-249-401-11	s	CARBON 47 5% 1/4W
R179	1-215-868-00	s	METAL 680 5% 1W
R180	1-249-413-11	s	CARBON 470 5% 1/4W
R181	1-214-840-00	▪	METAL 100 1/2W
R182	1-214-937-00	▪	METAL 1M 1% 1/2W
R183	1-215-867-00	s	METAL 470 5% 1W
R184	1-249-425-11	s	CARBON 4.7k 1/4W

(RE-122A BOARD(ES-7(CE)))

Ref. No. or Q'ty	Part No.	SP	Description
R185	1-216-349-00	s	METAL 1 1W
R186	1-249-429-11	s	CARBON 10k 5% 1/4W
R187	1-247-903-00	s	CARBON 1M 5% 1/4W
R188	1-215-863-11	s	METAL 100 1W
R189	1-215-859-00	s	METAL 22 5% 1W
R190	1-208-603-11	s	WIREWOUND 0.1 10%
R191	1-208-603-11	▪	WIREWOUND 0.1 10% 5W
R192	1-247-863-91	s	CARBON 22k 5% 1/4W
R193	1-247-863-91	s	CARBON 22k 5% 1/4W
R194	1-247-863-91	s	CARBON 22k 5% 1/4W
R195	1-247-863-91	s	CARBON 22k 5% 1/4W
R196	1-215-445-00	s	METAL 10k 1% 1/6W
R197	1-215-469-00	s	METAL 100k 1% 1/6W
R198	1-215-913-11	s	METAL 220 3W
R199	1-215-869-11	s	METAL 1.0k 1W
R200	1-215-869-11	s	METAL 1.0k 1W
R201	1-215-429-00	s	METAL 2.2k 1% 1/6W
R202	1-215-441-00	s	METAL 6.8k 1% 1/6W
R203	1-215-447-00	s	METAL 12k 1% 1/6W
R204	1-215-429-00	s	METAL 2.2k 1% 1/6W
R205	1-215-447-00	s	METAL 12k 1% 1/6W
R206	1-215-437-00	s	METAL 4.7k 1% 1/6W
R207	1-215-461-00	s	METAL 47k 1% 1/6W
R208	1-215-447-00	s	METAL 12k 1% 1/6W
R209	1-215-461-00	s	METAL 47k 1% 1/6W
R210	1-215-921-11	s	METAL 4.7k 5% 3W
R211	1-249-435-11	s	CARBON 33k 5% 1/4W
R212	1-215-397-00	s	METAL 100 1% 1/6W
R213	1-249-429-11	▪	CARBON 10k 5% 1/4W
RY100 ⚠	1-515-685-31	▪	RELAY
RY101 ⚠	1-515-542-21	▪	RELAY
VDR100	1-806-356-00	s	VARISTOR ENB461-10A
VDR101	1-806-356-00	s	VARISTOR ENB461-10A

RP-89 BOARD(ESBK-7041(UC/J))

Ref. No. or Q'ty	Part No.	SP	Description
1pc	A-8311-017-A	o	MOUNTED CIRCUIT BOARD, RP-89
1pc	3-603-857-01	o	CN PLATE,RP
1pc	7-682-947-01	s	SCREW +PSW 3x6
1pc	7-682-948-01	s	SCREW +PSW 3x8
1pc	7-685-862-09	s	SCREW +BVTT 2.6x6 (S)
C1	1-163-038-91	■	CERAMIC, CHIP 0.1uF 25V
C2	1-126-392-11	s	ELECT, CHIP 100uF 20% 6.3V
C3	1-163-038-91	s	CERAMIC, CHIP 0.1uF 25V
C4	1-126-392-11	s	ELECT, CHIP 100uF 20% 6.3V
C5	1-126-392-11	s	ELECT, CHIP 100uF 20% 6.3V
C6	1-126-392-11	s	ELECT, CHIP 100uF 20% 6.3V
C7	1-126-392-11	s	ELECT, CHIP 100uF 20% 6.3V
C8-17	1-163-038-91	s	CERAMIC, CHIP 0.1uF 25V
C18-27	1-126-396-11	s	ELECT, CHIP 47uF 20% 16V
C28	1-163-038-91	■	CERAMIC, CHIP 0.1uF 25V
C29	1-163-038-91	s	CERAMIC, CHIP 0.1uF 25V
C30	1-163-038-91	■	CERAMIC, CHIP 0.1uF 25V
C31	1-163-038-91	s	CERAMIC, CHIP 0.1uF 25V
C32	1-126-399-11	s	ELECT, CHIP 10uF 20% 35V
C33	1-126-399-11	■	ELECT, CHIP 10uF 20% 35V
C34	1-163-038-91	s	CERAMIC, CHIP 0.1uF 25V
C35	1-163-038-91	■	CERAMIC, CHIP 0.1uF 25V
C36	1-163-038-91	s	CERAMIC, CHIP 0.1uF 25V
C37	1-126-398-11	s	ELECT, CHIP 4.7uF 20% 35V
C38	1-163-038-91	s	CERAMIC, CHIP 0.1uF 25V
C39	1-126-398-11	s	ELECT, CHIP 4.7uF 20% 35V
C40	1-163-038-91	s	CERAMIC, CHIP 0.1uF 25V
C41	1-163-038-91	s	CERAMIC, CHIP 0.1uF 25V
C42	1-163-038-91	s	CERAMIC, CHIP 0.1uF 25V
C43	1-163-038-91	s	CERAMIC, CHIP 0.1uF 25V
C44	1-126-398-11	■	ELECT, CHIP 4.7uF 20% 35V
C45	1-126-398-11	■	ELECT, CHIP 4.7uF 20% 35V
C46	1-126-392-11	s	ELECT, CHIP 100uF 20% 6.3V
C47	1-163-038-91	■	CERAMIC, CHIP 0.1uF 25V
C48	1-163-038-91	s	CERAMIC, CHIP 0.1uF 25V
C49	1-126-392-11	s	ELECT, CHIP 100uF 20% 6.3V
C50	1-163-038-91	s	CERAMIC, CHIP 0.1uF 25V
C101-112	1-163-038-91	s	CERAMIC, CHIP 0.1uF 25V
C113	1-126-393-11	s	ELECT, CHIP 33uF 20% 10V
C114	1-126-393-11	s	ELECT, CHIP 33uF 20% 10V
C115	1-163-038-91	s	CERAMIC, CHIP 0.1uF 25V
C116	1-163-038-91	s	CERAMIC, CHIP 0.1uF 25V
C117	1-126-396-11	■	ELECT, CHIP 47uF 20% 16V
C118	1-163-038-91	s	CERAMIC, CHIP 0.1uF 25V
C119	1-163-038-91	s	CERAMIC, CHIP 0.1uF 25V
C120	1-163-038-91	s	CERAMIC, CHIP 0.1uF 25V
C121	1-163-038-91	s	CERAMIC, CHIP 0.1uF 25V
C122	1-126-396-11	s	ELECT, CHIP 47uF 20% 16V
C123	1-163-038-91	s	CERAMIC, CHIP 0.1uF 25V
C124	1-163-251-11	s	CERAMIC, CHIP 100pF 5% 50V
C125	1-163-038-91	s	CERAMIC, CHIP 0.1uF 25V
C126	1-126-396-11	s	ELECT, CHIP 47uF 20% 16V
C127	1-163-251-11	s	CERAMIC, CHIP 100pF ■ 50V
C128	1-163-038-91	s	CERAMIC, CHIP 0.1uF 25V
C130	1-163-038-91	s	CERAMIC, CHIP 0.1uF 25V
C132	1-163-038-91	■	CERAMIC, CHIP 0.1uF 25V
C134	1-163-038-91	s	CERAMIC, CHIP 0.1uF 25V
C135	1-163-038-91	s	CERAMIC, CHIP 0.1uF 25V
C139	1-163-038-91	s	CERAMIC, CHIP 0.1uF 25V

(RP-89 BOARD(ESBK-7041(UC/J)))

Ref. No. or Q'ty	Part No.	SP	Description
C142	1-126-396-11	s	ELECT, CHIP 47uF 20% 16V
C144	1-163-275-11	s	CERAMIC, CHIP 0.001uF ■ 50V
C145	1-163-275-11	■	CERAMIC, CHIP 0.001uF 5% 50V
C147	1-163-038-91	s	CERAMIC, CHIP 0.1uF 25V
C148	1-126-394-11	s	ELECT, CHIP 10uF 20% 16V
C149	1-163-038-91	s	CERAMIC, CHIP 0.1uF 25V
C150	1-109-994-11	s	CERAMIC, CHIP 2.2uF 10% 10V
C151	1-163-038-91	s	CERAMIC, CHIP 0.1uF 25V
C152	1-163-251-11	s	CERAMIC, CHIP 100pF 5% 50V
C153	1-163-033-91	s	CERAMIC, CHIP 0.022uF 50V
C154	1-163-038-91	s	CERAMIC, CHIP 0.1uF 25V
C158	1-163-033-91	■	CERAMIC, CHIP 0.022uF 50V
C210	1-163-038-91	s	CERAMIC, CHIP 0.1uF 25V
C211	1-163-038-91	■	CERAMIC, CHIP 0.1uF 25V
C217	1-126-396-11	s	ELECT, CHIP 47uF 20% 16V
C218	1-163-038-91	s	CERAMIC, CHIP 0.1uF 25V
C219	1-163-038-91	s	CERAMIC, CHIP 0.1uF 25V
C220	1-163-038-91	s	CERAMIC, CHIP 0.1uF 25V
C221	1-163-038-91	■	CERAMIC, CHIP 0.1uF 25V
C222	1-126-396-11	s	ELECT, CHIP 47uF 20% 16V
C223	1-163-038-91	■	CERAMIC, CHIP 0.1uF 25V
C224	1-163-251-11	s	CERAMIC, CHIP 100pF ■ 50V
C225	1-163-038-91	s	CERAMIC, CHIP 0.1uF 25V
C226	1-126-396-11	s	ELECT, CHIP 47uF 20% 16V
C227	1-163-251-11	s	CERAMIC, CHIP 100pF ■ 50V
C230	1-163-038-91	s	CERAMIC, CHIP 0.1uF 25V
C232	1-163-038-91	s	CERAMIC, CHIP 0.1uF 25V
C234	1-163-038-91	s	CERAMIC, CHIP 0.1uF 25V
C235	1-163-038-91	s	CERAMIC, CHIP 0.1uF 25V
C239	1-163-038-91	s	CERAMIC, CHIP 0.1uF 25V
C242	1-126-396-11	s	ELECT, CHIP 47uF 20% 16V
C244	1-163-275-11	s	CERAMIC, CHIP 0.001uF 5% 50V
C245	1-163-275-11	s	CERAMIC, CHIP 0.001uF 5% 50V
C247	1-163-038-91	s	CERAMIC, CHIP 0.1uF 25V
C248	1-126-394-11	s	ELECT, CHIP 10uF 20% 16V
C249	1-163-038-91	■	CERAMIC, CHIP 0.1uF 25V
C250	1-109-994-11	■	CERAMIC, CHIP 2.2uF 10% 10V
C251	1-163-038-91	s	CERAMIC, CHIP 0.1uF 25V
C252	1-163-251-11	s	CERAMIC, CHIP 100pF 5% 50V
C253	1-163-033-91	s	CERAMIC, CHIP 0.022uF 50V
C254	1-163-038-91	s	CERAMIC, CHIP 0.1uF 25V
C258	1-163-033-91	s	CERAMIC, CHIP 0.022uF 50V
C301-312	1-163-038-91	s	CERAMIC, CHIP 0.1uF 25V
C313	1-126-393-11	s	ELECT, CHIP 33uF 20% 10V
C314	1-126-393-11	s	ELECT, CHIP 33uF 20% 10V
C315	1-163-038-91	s	CERAMIC, CHIP 0.1uF 25V
C316	1-163-038-91	s	CERAMIC, CHIP 0.1uF 25V
C317	1-126-396-11	s	ELECT, CHIP 47uF 20% 16V
C318	1-163-038-91	■	CERAMIC, CHIP 0.1uF 25V
C319	1-163-038-91	s	CERAMIC, CHIP 0.1uF 25V
C320	1-163-038-91	s	CERAMIC, CHIP 0.1uF 25V
C321	1-163-038-91	s	CERAMIC, CHIP 0.1uF 25V
C322	1-126-396-11	s	ELECT, CHIP 47uF 20% 16V
C323	1-163-038-91	s	CERAMIC, CHIP 0.1uF 25V
C324	1-163-251-11	s	CERAMIC, CHIP 100pF ■ 50V
C325	1-163-038-91	s	CERAMIC, CHIP 0.1uF 25V
C326	1-126-396-11	s	ELECT, CHIP 47uF 20% 16V
C327	1-163-251-11	s	CERAMIC, CHIP 100pF 5% 50V
C328	1-163-038-91	s	CERAMIC, CHIP 0.1uF 25V

(RP-89 BOARD(ESBK-7041(UC/J)))

Ref. No. or Q'ty	Part No.	SP	Description
C330	1-163-038-91	s	CERAMIC, CHIP 0.1uF 25V
C332	1-163-038-91	s	CERAMIC, CHIP 0.1uF 25V
C334	1-163-038-91	s	CERAMIC, CHIP 0.1uF 25V
C335	1-163-038-91	s	CERAMIC, CHIP 0.1uF 25V
C339	1-163-038-91	s	CERAMIC, CHIP 0.1uF 25V
C342	1-126-396-11	s	ELECT, CHIP 47uF 20% 16V
C344	1-163-275-11	s	CERAMIC, CHIP 0.001uF 5% 50V
C345	1-163-275-11	s	CERAMIC, CHIP 0.001uF ■ 50V
C347	1-163-038-91	s	CERAMIC, CHIP 0.1uF 25V
C348	1-126-394-11	s	ELECT, CHIP 10uF 20% 16V
C349	1-163-038-91	s	CERAMIC, CHIP 0.1uF 25V
C350	1-109-994-11	s	CERAMIC, CHIP 2.2uF 10% 10V
C351	1-163-038-91	s	CERAMIC, CHIP 0.1uF 25V
C352	1-163-251-11	s	CERAMIC, CHIP 100pF 5% 50V
C353	1-163-033-91	s	CERAMIC, CHIP 0.022uF 50V
C354	1-163-038-91	s	CERAMIC, CHIP 0.1uF 25V
C358	1-163-033-91	s	CERAMIC, CHIP 0.022uF 50V
C410	1-163-038-91	s	CERAMIC, CHIP 0.1uF 25V
C411	1-163-038-91	s	CERAMIC, CHIP 0.1uF 25V
C417	1-126-396-11	s	ELECT, CHIP 47uF 20% 16V
C418	1-163-038-91	s	CERAMIC, CHIP 0.1uF 25V
C419	1-163-038-91	s	CERAMIC, CHIP 0.1uF 25V
C420	1-163-038-91	s	CERAMIC, CHIP 0.1uF 25V
C421	1-163-038-91	s	CERAMIC, CHIP 0.1uF 25V
C422	1-126-396-11	s	ELECT, CHIP 47uF 20% 16V
C423	1-163-038-91	s	CERAMIC, CHIP 0.1uF 25V
C424	1-163-251-11	s	CERAMIC, CHIP 100pF 5% 50V
C425	1-163-038-91	■	CERAMIC, CHIP 0.1uF 25V
C426	1-126-396-11	■	ELECT, CHIP 47uF 20% 16V
C427	1-163-251-11	■	CERAMIC, CHIP 100pF 5% 50V
C430	1-163-038-91	s	CERAMIC, CHIP 0.1uF 25V
C432	1-163-038-91	s	CERAMIC, CHIP 0.1uF 25V
C434	1-163-038-91	s	CERAMIC, CHIP 0.1uF 25V
C435	1-163-038-91	s	CERAMIC, CHIP 0.1uF 25V
C439	1-163-038-91	s	CERAMIC, CHIP 0.1uF 25V
C442	1-126-396-11	s	ELECT, CHIP 47uF 20% 16V
C444	1-163-275-11	s	CERAMIC, CHIP 0.001uF ■ 50V
C445	1-163-275-11	s	CERAMIC, CHIP 0.001uF ■ 50V
C447	1-163-038-91	s	CERAMIC, CHIP 0.1uF 25V
C448	1-126-394-11	s	ELECT, CHIP 10uF 20% 16V
C449	1-163-038-91	s	CERAMIC, CHIP 0.1uF 25V
C450	1-109-994-11	s	CERAMIC, CHIP 2.2uF 10% 10V
C451	1-163-038-91	s	CERAMIC, CHIP 0.1uF 25V
C452	1-163-251-11	s	CERAMIC, CHIP 100pF 5% 50V
C453	1-163-033-91	s	CERAMIC, CHIP 0.022uF 50V
C454	1-163-038-91	s	CERAMIC, CHIP 0.1uF 25V
C458	1-163-033-91	s	CERAMIC, CHIP 0.022uF 50V
C501	1-163-038-91	s	CERAMIC, CHIP 0.1uF 25V
C502-512	1-163-038-91	s	CERAMIC, CHIP 0.1uF 25V
C513	1-126-393-11	s	ELECT, CHIP 33uF 20% 10V
C514	1-126-393-11	s	ELECT, CHIP 33uF 20% 10V
C515	1-163-038-91	s	CERAMIC, CHIP 0.1uF 25V
C516	1-163-038-91	s	CERAMIC, CHIP 0.1uF 25V
C517	1-126-396-11	s	ELECT, CHIP 47uF 20% 16V
C518	1-163-038-91	s	CERAMIC, CHIP 0.1uF 25V
C519	1-163-038-91	s	CERAMIC, CHIP 0.1uF 25V
C520	1-163-038-91	s	CERAMIC, CHIP 0.1uF 25V
C521	1-163-038-91	s	CERAMIC, CHIP 0.1uF 25V
C522	1-126-396-11	s	ELECT, CHIP 47uF 20% 16V

(RP-89 BOARD(ESBK-7041(UC/J)))

Ref. No. or Q'ty	Part No.	SP	Description
C523	1-163-038-91	■	CERAMIC, CHIP 0.1uF 25V
C524	1-163-038-91	s	CERAMIC, CHIP 0.1uF 25V
C525	1-163-038-91	s	CERAMIC, CHIP 0.1uF 25V
C526	1-163-038-91	s	CERAMIC, CHIP 0.1uF 25V
C527	1-163-251-11	s	CERAMIC, CHIP 100pF 5% 50V
C528	1-163-251-11	s	CERAMIC, CHIP 100pF 5% 50V
C529	1-163-038-91	s	CERAMIC, CHIP 0.1uF 25V
C530	1-163-038-91	s	CERAMIC, CHIP 0.1uF 25V
C531	1-163-038-91	s	CERAMIC, CHIP 0.1uF 25V
C532	1-126-396-11	s	ELECT, CHIP 47uF 20% 16V
C533	1-163-038-91	s	CERAMIC, CHIP 0.1uF 25V
C534	1-163-038-91	s	CERAMIC, CHIP 0.1uF 25V
C535	1-126-396-11	s	ELECT, CHIP 47uF 20% 16V
C536	1-163-038-91	■	CERAMIC, CHIP 0.1uF 25V
C538	1-163-038-91	s	CERAMIC, CHIP 0.1uF 25V
C542	1-126-396-11	s	ELECT, CHIP 47uF 20% 16V
C543	1-163-275-11	■	CERAMIC, CHIP 0.001uF ■ 50V
C544	1-163-275-11	s	CERAMIC, CHIP 0.001uF ■ 50V
C546	1-163-038-91	s	CERAMIC, CHIP 0.1uF 25V
C547	1-126-394-11	s	ELECT, CHIP 10uF 20% 16V
C548	1-163-038-91	s	CERAMIC, CHIP 0.1uF 25V
C549	1-109-994-11	s	CERAMIC, CHIP 2.2uF 10% 10V
C550	1-163-038-91	s	CERAMIC, CHIP 0.1uF 25V
C551	1-163-251-11	s	CERAMIC, CHIP 100pF 5% 50V
C552	1-163-033-91	■	CERAMIC, CHIP 0.022uF 50V
C553	1-163-038-91	s	CERAMIC, CHIP 0.1uF 25V
C554	1-163-033-91	s	CERAMIC, CHIP 0.022uF 50V
C555	1-126-396-11	s	ELECT, CHIP 47uF 20% 16V
C556	1-163-038-91	s	CERAMIC, CHIP 0.1uF 25V
C560	1-163-033-91	s	CERAMIC, CHIP 0.022uF 50V
C612	1-126-396-11	■	ELECT, CHIP 47uF 20% 16V
C617	1-126-396-11	s	ELECT, CHIP 47uF 20% 16V
C618	1-163-038-91	s	CERAMIC, CHIP 0.1uF 25V
C619	1-163-038-91	■	CERAMIC, CHIP 0.1uF 25V
C620	1-163-038-91	s	CERAMIC, CHIP 0.1uF 25V
C621	1-163-038-91	s	CERAMIC, CHIP 0.1uF 25V
C622	1-126-396-11	■	ELECT, CHIP 47uF 20% 16V
C623	1-163-038-91	s	CERAMIC, CHIP 0.1uF 25V
C652	1-163-033-91	s	CERAMIC, CHIP 0.022uF 50V
C654	1-163-033-91	s	CERAMIC, CHIP 0.022uF 50V
C701-712	1-163-038-91	s	CERAMIC, CHIP 0.1uF 25V
C713	1-126-393-11	s	ELECT, CHIP 33uF 20% 10V
C714	1-126-393-11	s	ELECT, CHIP 33uF 20% 10V
C715-722	1-163-038-91	s	CERAMIC, CHIP 0.1uF 25V
C723	1-126-393-11	s	ELECT, CHIP 33uF 20% 10V
C724	1-163-038-91	s	CERAMIC, CHIP 0.1uF 25V
C725	1-163-038-91	s	CERAMIC, CHIP 0.1uF 25V
C726	1-163-038-91	s	CERAMIC, CHIP 0.1uF 25V
C727	1-163-038-91	s	CERAMIC, CHIP 0.1uF 25V
C728	1-126-393-11	s	ELECT, CHIP 33uF 20% 10V
C729	1-163-038-91	s	CERAMIC, CHIP 0.1uF 25V
C731	1-163-038-91	s	CERAMIC, CHIP 0.1uF 25V
C732	1-163-038-91	s	CERAMIC, CHIP 0.1uF 25V
C733	1-126-393-11	s	ELECT, CHIP 33uF 20% 10V
C734-760	1-163-038-91	■	CERAMIC, CHIP 0.1uF 25V
C762	1-163-038-91	s	CERAMIC, CHIP 0.1uF 25V
C771	1-163-038-91	s	CERAMIC, CHIP 0.1uF 25V
C772	1-163-038-91	s	CERAMIC, CHIP 0.1uF 25V
C773	1-163-038-91	s	CERAMIC, CHIP 0.1uF 25V

(RP-89 BOARD(ESBK-7041(UC/J)))

Ref. No. or Q'ty	Part No.	SP	Description
C774	1-163-038-91	s	CERAMIC, CHIP 0.1uF 25V
C776-784	1-163-038-91	s	CERAMIC, CHIP 0.1uF 25V
C785	1-126-393-11	s	ELECT, CHIP 33uF 20% 10V
C786	1-163-038-91	s	CERAMIC, CHIP 0.1uF 25V
C787	1-163-038-91	s	CERAMIC, CHIP 0.1uF 25V
C798-812	1-163-038-91	s	CERAMIC, CHIP 0.1uF 25V
C813	1-126-393-11	s	ELECT, CHIP 33uF 20% 10V
C814	1-126-393-11	s	ELECT, CHIP 33uF 20% 10V
C815-822	1-163-038-91	■	CERAMIC, CHIP 0.1uF 25V
C823	1-126-393-11	s	ELECT, CHIP 33uF 20% 10V
C831	1-163-038-91	s	CERAMIC, CHIP 0.1uF 25V
C832	1-126-393-11	s	ELECT, CHIP 33uF 20% 10V
C833-859	1-163-038-91	s	CERAMIC, CHIP 0.1uF 25V
C863-869	1-163-038-91	s	CERAMIC, CHIP 0.1uF 25V
C877	1-126-393-11	s	ELECT, CHIP 33uF 20% 10V
C878	1-163-038-91	s	CERAMIC, CHIP 0.1uF 25V
C889	1-163-038-91	s	CERAMIC, CHIP 0.1uF 25V
C894	1-126-393-11	s	ELECT, CHIP 33uF 20% 10V
C913	1-126-393-11	■	ELECT, CHIP 33uF 20% 10V
C914	1-126-393-11	■	ELECT, CHIP 33uF 20% 10V
C923	1-126-393-11	■	ELECT, CHIP 33uF 20% 10V
C931	1-163-038-91	■	CERAMIC, CHIP 0.1uF 25V
C932	1-126-393-11	■	ELECT, CHIP 33uF 20% 10V
C977	1-126-393-11	■	ELECT, CHIP 33uF 20% 10V
C978	1-163-038-91	s	CERAMIC, CHIP 0.1uF 25V
C994	1-126-393-11	s	ELECT, CHIP 33uF 20% 10V
C995	1-163-038-91	s	CERAMIC, CHIP 0.1uF 25V
C1001	1-164-232-11	s	CERAMIC, CHIP 0.01uF 10% 100V
C1015	1-126-393-11	s	ELECT, CHIP 33uF 20% 10V
C1016	1-163-038-91	■	CERAMIC, CHIP 0.1uF 25V
C1019	1-163-009-11	s	CERAMIC, CHIP 0.001uF 10% 50V
C1020	1-104-760-11	s	CERAMIC, CHIP 0.047uF 10% 50V
C1021	1-163-009-11	s	CERAMIC, CHIP 0.001uF 10% 50V
C1022	1-163-009-11	■	CERAMIC, CHIP 0.001uF 10% 50V
C1023	1-135-149-21	s	TANTALUM, CHIP 2.2uF 10% 10V
C1024	1-164-232-11	s	CERAMIC, CHIP 0.01uF 10% 100V
C1038	1-126-393-11	s	ELECT, CHIP 33uF 20% 10V
C1039	1-163-038-91	s	CERAMIC, CHIP 0.1uF 25V
C1042	1-163-009-11	s	CERAMIC, CHIP 0.001uF 10% 50V
C1043	1-104-760-11	s	CERAMIC, CHIP 0.047uF 10% 50V
C1044	1-163-009-11	s	CERAMIC, CHIP 0.001uF 10% 50V
C1045	1-163-009-11	s	CERAMIC, CHIP 0.001uF 10% 50V
C1046	1-135-149-21	s	TANTALUM, CHIP 2.2uF 10% 10V
C1050	1-163-227-11	s	CERAMIC, CHIP 10pF 5% 50V
C1051	1-163-227-11	s	CERAMIC, CHIP 10pF 5% 50V
CN301	1-778-261-11	o	CONNECTOR, BB 124P, MALE
CN302	1-778-261-11	o	CONNECTOR, BB 124P, MALE
CN303	1-778-261-11	o	CONNECTOR, BB 124P, MALE
CN701	1-695-953-21	s	CONNECTOR, BB, CHIP 30P, FEMALE
CN702	1-695-953-21	s	CONNECTOR, BB, CHIP 30P, FEMALE
CT701	1-141-322-11	s	CAP, TRIMMER, CHIP 20pF
CT702	1-141-322-11	s	CAP, TRIMMER, CHIP 20pF
D1-10	8-719-938-72	s	DIODE SB01-05CP
D101	8-719-041-39	s	DIODE KV1470
D201	8-719-041-39	s	DIODE KV1470
D301	8-719-041-39	s	DIODE KV1470
D401	8-719-041-39	s	DIODE KV1470
D501	8-719-041-39	■	DIODE KV1470

(RP-89 BOARD(ESBK-7041(UC/J)))

Ref. No. or Q'ty	Part No.	SP	Description
D1001	8-719-027-95	■	DIODE HSM88WK
D1002	8-719-041-39	s	DIODE KV1470
D1003	8-719-027-95	s	DIODE HSM88WK
D1004	8-719-041-39	s	DIODE KV1470
E1-5	1-535-877-22	o	CHIP, CHECKER
E101	1-535-877-22	o	CHIP, CHECKER
E102	1-535-877-22	o	CHIP, CHECKER
E103	1-535-877-22	■	CHIP, CHECKER
E202	1-535-877-22	o	CHIP, CHECKER
E203	1-535-877-22	o	CHIP, CHECKER
E301	1-535-877-22	■	CHIP, CHECKER
E302	1-535-877-22	o	CHIP, CHECKER
E303	1-535-877-22	o	CHIP, CHECKER
E402	1-535-877-22	o	CHIP, CHECKER
E403	1-535-877-22	■	CHIP, CHECKER
E501	1-535-877-22	o	CHIP, CHECKER
E502	1-535-877-22	o	CHIP, CHECKER
E503	1-535-877-22	o	CHIP, CHECKER
E603	1-535-877-22	o	CHIP, CHECKER
E701	1-535-877-22	o	CHIP, CHECKER
E702	1-535-877-22	o	CHIP, CHECKER
E730	1-535-877-22	o	CHIP, CHECKER
E760	1-535-877-22	o	CHIP, CHECKER
E761	1-535-877-22	■	CHIP, CHECKER
E762	1-535-877-22	o	CHIP, CHECKER
E763	1-535-877-22	o	CHIP, CHECKER
E801	1-535-877-22	o	CHIP, CHECKER
E803	1-535-877-22	o	CHIP, CHECKER
E830	1-535-877-22	o	CHIP, CHECKER
E860	1-535-877-22	o	CHIP, CHECKER
E861	1-535-877-22	o	CHIP, CHECKER
E862	1-535-877-22	o	CHIP, CHECKER
E901	1-535-877-22	o	CHIP, CHECKER
E903	1-535-877-22	o	CHIP, CHECKER
E931	1-535-877-22	o	CHIP, CHECKER
E960	1-535-877-22	o	CHIP, CHECKER
E961	1-535-877-22	o	CHIP, CHECKER
E962	1-535-877-22	o	CHIP, CHECKER
E1001-1010	1-535-877-22	o	CHIP, CHECKER
F1	⚠ 1-533-477-11	s	FUSE, CHIP 8A 125V
FL1-6	1-239-719-11	s	FILTER, NOISE, CHIP
FL7-12	1-239-642-21	s	EMIFIL ARRAY, CHIP
FL13-18	1-239-719-11	■	FILTER, NOISE, CHIP
IC1	8-759-259-77	s	IC PQ20VZ5U
IC4	8-759-186-47	■	IC TC74VHC138F
IC5	8-759-186-47	s	IC TC74VHC138F
IC6	8-759-259-77	■	IC PQ20VZ5U
IC7	8-759-186-47	■	IC TC74VHC138F
IC8	8-759-515-09	s	IC SN74ALS374ANS
IC9	8-759-186-77	■	IC TC74VHC541F
IC10	8-759-186-77	■	IC TC74VHC541F
IC11	8-759-259-77	■	IC PQ20VZ5U
IC12	8-759-925-76	s	IC SN74HC08ANS
IC13	8-759-359-54	s	IC SN74ALS244CNS-E20
IC14	8-759-934-41	s	IC SN74ALS240ANS
IC15	8-759-186-60	s	IC TC74VHC240F

(RP-89 BOARD(ESBK-7041(UC/J)))

Ref. No. or Q'ty	Part No.	SP	Description
IC16	8-759-259-77	s	IC PQ20VZ5U
IC17	8-759-939-92	s	IC SN74ALS541NS
IC18	8-759-186-57	s	IC TC74VHC175F
IC19	8-759-245-45	s	IC TA78L09F
IC20	8-759-186-77	s	IC TC74VHC541F
IC21	8-759-259-77	s	IC PQ20VZ5U
IC102	8-759-371-04	■	IC HM514260CJ7-Z
IC103	8-759-371-04	s	IC HM514260CJ7-Z
IC104	8-759-337-74	s	IC HM62V256LT8Z
IC105	8-752-374-96	s	IC CXD2190R
IC108	8-759-906-53	s	IC TL062CPS
IC110	8-759-095-67	s	IC TC74ACT541FS
IC111	8-759-326-71	s	IC CXD8517Q
IC112	8-759-095-67	s	IC TC74ACT541FS
IC113	8-759-327-04	s	IC CXD2913Q
IC114	8-759-196-97	s	IC TC7SH32FU-TE85R
IC204	8-759-337-74	■	IC HM62V256LT8Z
IC205	8-752-374-96	s	IC CXD2190R
IC208	8-759-906-53	s	IC TL062CPS
IC210	8-759-095-67	s	IC TC74ACT541FS
IC211	8-759-326-71	s	IC CXD8517Q
IC213	8-759-327-04	s	IC CXD2913Q
IC214	8-759-196-97	s	IC TC7SH32FU-TE85R
IC302	8-759-371-04	s	IC HM514260CJ7-Z
IC303	8-759-371-04	s	IC HM514260CJ7-Z
IC304	8-759-337-74	s	IC HM62V256LT8Z
IC305	8-752-374-96	s	IC CXD2190R
IC308	8-759-906-53	s	IC TL062CPS
IC310	8-759-095-67	s	IC TC74ACT541FS
IC311	8-759-326-71	s	IC CXD8517Q
IC312	8-759-095-67	s	IC TC74ACT541FS
IC313	8-759-327-04	s	IC CXD2913Q
IC314	8-759-196-97	s	IC TC7SH32FU-TE85R
IC404	8-759-337-74	s	IC HM62V256LT8Z
IC405	8-752-374-96	s	IC CXD2190R
IC408	8-759-906-53	s	IC TL062CPS
IC410	8-759-095-67	s	IC TC74ACT541FS
IC411	8-759-326-71	s	IC CXD8517Q
IC413	8-759-327-04	s	IC CXD2913Q
IC414	8-759-196-97	s	IC TC7SH32FU-TE85R
IC502	8-759-371-04	s	IC HM514260CJ7-Z
IC503	8-759-371-04	s	IC HM514260CJ7-Z
IC504	8-759-337-74	s	IC HM62V256LT8Z
IC505	8-752-374-96	■	IC CXD2190R
IC508	8-759-906-53	s	IC TL062CPS
IC509	8-759-174-16	s	IC TC74VHC244F
IC510	8-759-095-67	s	IC TC74ACT541FS
IC511	8-759-326-71	s	IC CXD8517Q
IC512	8-759-271-86	s	IC TC7SH04FU
IC513	8-759-926-17	s	IC SN74HC153ANS
IC515	8-759-186-38	s	IC TC74VHC32F
IC518	8-759-327-04	s	IC CXD2913Q
IC604	8-759-337-74	■	IC HM62V256LT8Z
IC605	8-752-374-96	s	IC CXD2190R
IC611	8-759-326-71	s	IC CXD8517Q
IC702	8-759-371-04	s	IC HM514260CJ7-Z
IC703	8-759-371-04	s	IC HM514260CJ7-Z
IC704	8-759-327-06	s	IC CXD2186R
IC730	8-759-327-05	s	IC CXD2184R

(RP-89 BOARD(ESBK-7041(UC/J)))

Ref. No. or Q'ty	Part No.	SP	Description
IC731	8-759-328-28	s	IC ZA4024
IC732	8-759-328-28	s	IC ZA4024
IC733	8-759-328-28	s	IC ZA4024
IC765	8-759-175-27	s	IC TC74VHC574F
IC766	8-759-175-27	s	IC TC74VHC574F
IC767	8-759-175-27	s	IC TC74VHC574F
IC768	8-759-430-86	s	IC CXD8628R
IC770	8-752-373-89	s	IC CXD2185R
IC773	8-759-081-42	s	IC TC74VHC00F
IC774	8-759-186-38	s	IC TC74VHC32F
IC776	8-759-186-44	s	IC TC74VHC125F
IC802	8-759-371-04	s	IC HM514260CJ7-Z
IC803	8-759-371-04	■	IC HM514260CJ7-Z
IC804	8-759-327-06	s	IC CXD2186R
IC830	8-759-327-05	s	IC CXD2184R
IC831	8-759-328-28	s	IC ZA4024
IC832	8-759-328-28	■	IC ZA4024
IC833	8-759-328-28	■	IC ZA4024
IC863	8-759-515-12	s	IC SN74ALS574BNS
IC864	8-759-515-12	s	IC SN74ALS574BNS
IC865	8-759-430-86	s	IC CXD8628R
IC867	8-752-373-89	s	IC CXD2185R
IC902	8-759-371-04	■	IC HM514260CJ7-Z
IC903	8-759-371-04	s	IC HM514260CJ7-Z
IC904	8-759-327-06	s	IC CXD2186R
IC930	8-759-327-05	s	IC CXD2184R
IC931	8-759-328-28	s	IC ZA4024
IC932	8-759-328-28	s	IC ZA4024
IC933	8-759-328-28	■	IC ZA4024
IC963	8-759-515-12	■	IC SN74ALS574BNS
IC964	8-759-515-12	s	IC SN74ALS574BNS
IC965	8-759-430-86	s	IC CXD8628R
IC967	8-752-373-89	s	IC CXD2185R
IC1001	8-752-375-05	■	IC CXD2191R
IC1002	8-752-375-05	s	IC CXD2191R
IC1003	8-759-174-16	s	IC TC74VHC244F
IC1004	8-759-174-16	s	IC TC74VHC244F
IC1005	8-759-174-16	s	IC TC74VHC244F
L1	1-412-520-11	s	INDUCTOR 3.9uH
L2	1-412-520-11	s	INDUCTOR 3.9uH
L3	1-412-520-11	s	INDUCTOR 3.9uH
L4	1-412-519-11	s	INDUCTOR 3.3uH
L6	1-410-381-11	s	INDUCTOR, CHIP 10uH
L101	1-410-381-11	s	INDUCTOR, CHIP 10uH
L102	1-410-381-11	s	INDUCTOR, CHIP 10uH
L103	1-410-381-11	s	INDUCTOR, CHIP 10uH
L106	1-410-381-11	s	INDUCTOR, CHIP 10uH
L108	1-410-381-11	s	INDUCTOR, CHIP 10uH
L111	1-410-381-11	s	INDUCTOR, CHIP 10uH
L203	1-410-381-11	s	INDUCTOR, CHIP 10uH
L206	1-410-381-11	s	INDUCTOR, CHIP 10uH
L208	1-410-381-11	s	INDUCTOR, CHIP 10uH
L211	1-410-381-11	s	INDUCTOR, CHIP 10uH
L301	1-410-381-11	s	INDUCTOR, CHIP 10uH
L302	1-410-381-11	s	INDUCTOR, CHIP 10uH
L303	1-410-381-11	s	INDUCTOR, CHIP 10uH
L306	1-410-381-11	s	INDUCTOR, CHIP 10uH
L308	1-410-381-11	s	INDUCTOR, CHIP 10uH

(RP-89 BOARD(ESBK-7041(UC/J)))

Ref. No. or Q'ty	Part No.	SP	Description
L311	1-410-381-11	s	INDUCTOR, CHIP 10uH
L403	1-410-381-11	s	INDUCTOR, CHIP 10uH
L406	1-410-381-11	s	INDUCTOR, CHIP 10uH
L408	1-410-381-11	s	INDUCTOR, CHIP 10uH
L411	1-410-381-11	s	INDUCTOR, CHIP 10uH
L501-506	1-410-381-11	s	INDUCTOR, CHIP 10uH
L508	1-410-381-11	s	INDUCTOR, CHIP 10uH
L510	1-410-381-11	s	INDUCTOR, CHIP 10uH
L603	1-410-381-11	s	INDUCTOR, CHIP 10uH
L610	1-410-381-11	s	INDUCTOR, CHIP 10uH
L701	1-410-381-11	s	INDUCTOR, CHIP 10uH
L702	1-410-381-11	s	INDUCTOR, CHIP 10uH
L703	1-410-381-11	■	INDUCTOR, CHIP 10uH
L731	1-410-381-11	s	INDUCTOR, CHIP 10uH
L762	1-410-381-11	s	INDUCTOR, CHIP 10uH
L764	1-410-381-11	s	INDUCTOR, CHIP 10uH
L801	1-410-381-11	s	INDUCTOR, CHIP 10uH
L802	1-410-381-11	s	INDUCTOR, CHIP 10uH
L803	1-410-381-11	s	INDUCTOR, CHIP 10uH
L831	1-410-381-11	s	INDUCTOR, CHIP 10uH
L861	1-410-381-11	s	INDUCTOR, CHIP 10uH
L863	1-410-381-11	s	INDUCTOR, CHIP 10uH
L901	1-410-381-11	s	INDUCTOR, CHIP 10uH
L902	1-410-381-11	s	INDUCTOR, CHIP 10uH
L903	1-410-381-11	s	INDUCTOR, CHIP 10uH
L931	1-410-381-11	s	INDUCTOR, CHIP 10uH
L961	1-410-381-11	s	INDUCTOR, CHIP 10uH
L963	1-410-381-11	s	INDUCTOR, CHIP 10uH
L1001	1-410-381-11	s	INDUCTOR, CHIP 10uH
L1002	1-410-740-31	s	INDUCTOR CHIP 0.82uH
L1003	1-410-381-11	s	INDUCTOR, CHIP 10uH
L1004	1-410-740-31	s	INDUCTOR CHIP 0.82uH
LV107	1-411-984-11	s	COIL, VARIABLE
LV207	1-411-984-11	s	COIL, VARIABLE
LV307	1-411-984-11	s	COIL, VARIABLE
LV407	1-411-984-11	s	COIL, VARIABLE
LV507	1-411-984-11	s	COIL, VARIABLE
R1	1-216-061-00	■	METAL, CHIP 3.3k 5% 1/10W
R2	1-216-009-00	s	METAL, CHIP 22 5% 1/10W
R3	1-216-009-00	s	METAL, CHIP 22 5% 1/10W
R4	1-216-009-00	s	METAL, CHIP 22 5% 1/10W
R5	1-216-009-00	s	METAL, CHIP 22 5% 1/10W
R6	1-216-061-00	s	METAL, CHIP 3.3k 5% 1/10W
R7	1-216-061-00	s	METAL, CHIP 3.3k 5% 1/10W
R8	1-216-061-00	■	METAL, CHIP 3.3k 5% 1/10W
R9	1-216-061-00	s	METAL, CHIP 3.3k 5% 1/10W
R10	1-216-009-00	s	METAL, CHIP 22 5% 1/10W
R11	1-216-025-91	s	METAL, CHIP 100 5% 1/10W
R12	1-216-009-00	s	METAL, CHIP 22 5% 1/10W
R13	1-216-089-91	s	METAL, CHIP 47k 5% 1/10W
R16-20	1-216-295-91	s	RES, CHIP 0
R21	1-216-603-11	s	METAL, CHIP 10 0.5% 1/10W
R22	1-208-767-11	s	METAL, CHIP 240 0.5% 1/10W
R23	1-216-652-11	s	METAL, CHIP 1.1k 0.5% 1/10W
R24	1-216-651-11	s	METAL, CHIP 1k 0.5% 1/10W
R25	1-216-603-11	s	METAL, CHIP 10 0.5% 1/10W
R26	1-208-767-11	s	METAL, CHIP 240 0.5% 1/10W
R27	1-216-652-11	s	METAL, CHIP 1.1k 0.5% 1/10W

(RP-89 BOARD(ESBK-7041(UC/J)))

Ref. No. or Q'ty	Part No.	SP	Description
R28	1-216-651-11	s	METAL, CHIP 1k 0.5% 1/10W
R29	1-216-603-11	s	METAL, CHIP 10 0.5% 1/10W
R30	1-208-767-11	■	METAL, CHIP 240 0.5% 1/10W
R31	1-216-652-11	s	METAL, CHIP 1.1k 0.5% 1/10W
R32	1-216-651-11	s	METAL, CHIP 1k 0.5% 1/10W
R33	1-216-603-11	s	METAL, CHIP 10 0.5% 1/10W
R34	1-208-767-11	s	METAL, CHIP 240 0.5% 1/10W
R35	1-216-652-11	s	METAL, CHIP 1.1k 0.5% 1/10W
R36	1-216-651-11	s	METAL, CHIP 1k 0.5% 1/10W
R37	1-216-603-11	■	METAL, CHIP 10 0.5% 1/10W
R38	1-208-767-11	s	METAL, CHIP 240 0.5% 1/10W
R39	1-216-652-11	■	METAL, CHIP 1.1k 0.5% 1/10W
R40	1-216-651-11	■	METAL, CHIP 1k 0.5% 1/10W
R41	1-216-009-00	s	METAL, CHIP 22 ■ 1/10W
R45	1-216-009-00	s	METAL, CHIP 22 5% 1/10W
R46	1-216-009-00	s	METAL, CHIP 22 5% 1/10W
R47	1-216-009-00	s	METAL, CHIP 22 5% 1/10W
R48	1-216-009-00	s	METAL, CHIP 22 5% 1/10W
R49-53	1-216-025-91	s	METAL, CHIP 100 5% 1/10W
R54	1-216-295-91	s	RES, CHIP 0
R55	1-216-061-00	s	METAL, CHIP 3.3k 5% 1/10W
R57	1-216-295-91	s	RES, CHIP 0
R101	1-216-049-91	s	METAL, CHIP 1k 5% 1/10W
R102	1-216-049-91	s	METAL, CHIP 1k 5% 1/10W
R103	1-216-049-91	s	METAL, CHIP 1k 5% 1/10W
R104	1-216-295-91	s	RES, CHIP 0
R105	1-216-295-91	s	RES, CHIP 0
R106	1-216-295-91	■	RES, CHIP 0
R107	1-216-295-91	s	RES, CHIP 0
R108	1-216-073-00	s	METAL, CHIP 10k 5% 1/10W
R109	1-216-295-91	s	RES, CHIP 0
R110	1-216-295-91	s	■■S, CHIP 0
R111	1-216-295-91	s	RES, CHIP 0
R112	1-216-295-91	s	RES, CHIP 0
R114-120	1-216-295-91	s	RES, CHIP 0
R121	1-216-083-00	s	METAL, CHIP 27k 5% 1/10W
R122	1-216-295-91	s	RES, CHIP 0
R123	1-216-295-91	s	RES, CHIP 0
R124	1-216-295-91	s	RES, CHIP 0
R125	1-216-083-00	s	METAL, CHIP 27k 5% 1/10W
R126-133	1-216-295-91	s	RES, CHIP 0
R135	1-216-049-91	s	METAL, CHIP 1k ■■ 1/10W
R136	1-216-089-91	■	METAL, CHIP 47k 5% 1/10W
R137	1-216-089-91	s	METAL, CHIP 47k ■■ 1/10W
R138	1-216-089-91	s	METAL, CHIP 47k 5% 1/10W
R139-143	1-216-295-91	s	RES, CHIP 0
R144	1-216-097-91	■	METAL, CHIP 100k 5% 1/10W
R145	1-216-091-00	s	METAL, CHIP 56k 5% 1/10W
R146	1-208-822-11	■	METAL, CHIP 47k 0.5% 1/10W
R147	1-216-089-91	s	METAL, CHIP 47k 5% 1/10W
R148	1-216-089-91	■	METAL, CHIP 47k 5% 1/10W
R149-155	1-216-295-91	s	RES, CHIP 0
R156	1-216-073-00	s	METAL, CHIP 10k 5% 1/10W
R157	1-216-073-00	s	METAL, CHIP 10k 5% 1/10W
R158	1-216-073-00	s	METAL, CHIP 10k ■■ 1/10W
R159	1-216-025-91	s	METAL, CHIP 100 5% 1/10W
R163-168	1-216-073-00	s	METAL, CHIP 10k 5% 1/10W
R169	1-216-009-00	s	METAL, CHIP 22 5% 1/10W
R170	1-216-073-00	s	METAL, CHIP 10k 5% 1/10W

(RP-89 BOARD(ESBK-7041(UC/J)))

Ref. No. or Q'ty	Part No.	SP	Description
R171	1-216-295-91	s	RES, CHIP 0
R172	1-216-295-91	s	RES, CHIP 0
R173	1-216-009-00	s	METAL, CHIP 22 5% 1/10W
R175	1-216-295-91	■	RES, CHIP 0
R176	1-216-295-91	s	RES, CHIP 0
R178	1-216-295-91	s	RES, CHIP 0
R179	1-216-295-91	s	RES, CHIP 0
R208	1-216-073-00	s	METAL, CHIP 10k 5% 1/10W
R209	1-216-295-91	s	RES, CHIP [illegible]
R210	1-216-295-91	s	RES, CHIP 0
R211	1-216-295-91	s	RES, CHIP 0
R212	1-216-295-91	s	RES, CHIP 0
R214	1-216-295-91	s	RES, CHIP 0
R215	1-216-295-91	■	RES, CHIP 0
R216	1-216-295-91	s	RES, CHIP 0
R217	1-216-295-91	s	RES, CHIP [illegible]
R218	1-216-009-00	s	METAL, CHIP 22 5% 1/10W
R219	1-216-295-91	s	RES, CHIP 0
R220	1-216-295-91	s	RES, CHIP 0
R221	1-216-083-00	■	METAL, CHIP 27k 5% 1/10W
R225	1-216-083-00	s	METAL, CHIP 27k 5% 1/10W
R226-233	1-216-295-91	s	RES, CHIP 0
R235	1-216-049-91	s	METAL, CHIP 1k 5% 1/10W
R236	1-216-089-91	s	METAL, CHIP 47k 5% 1/10W
R237	1-216-089-91	s	METAL, CHIP 47k 5% 1/10W
R238	1-216-089-91	s	METAL, CHIP 47k 5% 1/10W
R239-243	1-216-295-91	s	RES, CHIP 0
R244	1-216-097-91	■	METAL, CHIP 100k 5% 1/10W
R245	1-216-091-00	■	METAL, CHIP 56k 5% 1/10W
R246	1-208-822-11	s	METAL, CHIP 47k 0.5% 1/10W
R247	1-216-089-91	s	METAL, CHIP 47k 5% 1/10W
R248	1-216-089-91	s	METAL, CHIP 47k 5% 1/10W
R249-255	1-216-295-91	s	RES, CHIP 0
R256	1-216-073-00	s	METAL, CHIP 10k 5% 1/10W
R257	1-216-073-00	s	METAL, CHIP 10k 5% 1/10W
R258	1-216-073-00	s	METAL, CHIP 10k 5% 1/10W
R259	1-216-025-91	s	METAL, CHIP 100 5% 1/10W
R263-268	1-216-073-00	s	METAL, CHIP 10k 5% 1/10W
R270	1-216-073-00	s	METAL, CHIP 10k 5% 1/10W
R271	1-216-295-91	s	RES, CHIP [illegible]
R272	1-216-295-91	s	RES, CHIP 0
R275	1-216-295-91	s	RES, CHIP 0
R276	1-216-295-91	s	RES, CHIP 0
R278	1-216-295-91	s	RES, CHIP 0
R279	1-216-295-91	s	RES, CHIP 0
R301	1-216-049-91	s	METAL, CHIP 1k 5% 1/10W
R302	1-216-049-91	s	METAL, CHIP 1k [illegible] 1/10W
R303	1-216-049-91	s	METAL, CHIP 1k 5% 1/10W
R305	1-216-295-91	s	RES, CHIP 0
R307	1-216-295-91	s	RES, CHIP [illegible]
R308	1-216-073-00	s	METAL, CHIP 10k 5% 1/10W
R309	1-216-295-91	s	RES, CHIP 0
R310	1-216-295-91	s	RES, CHIP 0
R311	1-216-295-91	s	RES, CHIP 0
R312	1-216-295-91	s	RES, CHIP [illegible]
R314-320	1-216-295-91	s	RES, CHIP 0
R321	1-216-083-00	s	METAL, CHIP 27k 5% 1/10W
R322	1-216-295-91	s	RES, CHIP 0
R323	1-216-295-91	s	RES, CHIP 0

(RP-89 BOARD(ESBK-7041(UC/J)))

Ref. No. or Q'ty	Part No.	SP	Description
R324	1-216-295-91	■	RES, CHIP 0
R325	1-216-083-00	s	METAL, CHIP 27k 5% 1/10W
R326-333	1-216-295-91	s	RES, CHIP 0
R335	1-216-049-91	s	METAL, CHIP 1k 5% 1/10W
R336	1-216-089-91	s	METAL, CHIP 47k 5% 1/10W
R337	1-216-089-91	s	METAL, CHIP 47k [illegible] 1/10W
R338	1-216-089-91	s	METAL, CHIP 47k 5% 1/10W
R339-343	1-216-295-91	s	RES, CHIP 0
R344	1-216-097-91	s	METAL, CHIP 100k [illegible] 1/10W
R345	1-216-091-00	s	METAL, CHIP 56k 5% 1/10W
R346	1-208-822-11	s	METAL, CHIP 47k 0.5% 1/10W
R347	1-216-089-91	s	METAL, CHIP 47k 5% 1/10W
R348	1-216-089-91	s	METAL, CHIP 47k 5% 1/10W
R349-355	1-216-295-91	s	RES, CHIP 0
R356	1-216-073-00	s	METAL, CHIP 10k 5% 1/10W
R357	1-216-073-00	s	METAL, CHIP 10k [illegible] 1/10W
R358	1-216-073-00	s	METAL, CHIP 10k [illegible] 1/10W
R359	1-216-025-91	s	METAL, CHIP 100 5% 1/10W
R363-368	1-216-073-00	s	METAL, CHIP 10k [illegible] 1/10W
R369	1-216-009-00	s	METAL, CHIP 22 5% 1/10W
R370	1-216-073-00	s	METAL, CHIP 10k [illegible] 1/10W
R371	1-216-295-91	s	RES, CHIP 0
R372	1-216-295-91	■	RES, CHIP 0
R375	1-216-295-91	s	RES, CHIP 0
R376	1-216-295-91	s	RES, CHIP 0
R378	1-216-295-91	s	RES, CHIP 0
R379	1-216-295-91	s	RES, CHIP 0
R408	1-216-073-00	s	METAL, CHIP 10k 5% 1/10W
R409	1-216-295-91	s	RES, CHIP 0
R410	1-216-295-91	s	RES, CHIP 0
R411	1-216-295-91	s	RES, CHIP 0
R412	1-216-295-91	s	RES, CHIP 0
R414	1-216-295-91	s	RES, CHIP 0
R415	1-216-295-91	s	RES, CHIP 0
R416	1-216-295-91	s	RES, CHIP 0
R417	1-216-295-91	s	RES, CHIP 0
R418	1-216-009-00	s	METAL, CHIP 22 5% 1/10W
R419	1-216-295-91	s	RES, CHIP 0
R420	1-216-295-91	s	RES, CHIP 0
R421	1-216-083-00	s	METAL, CHIP 27k 5% 1/10W
R425	1-216-083-00	■	METAL, CHIP 27k 5% 1/10W
R426-433	1-216-295-91	s	RES, CHIP 0
R435	1-216-049-91	s	METAL, CHIP 1k 5% 1/10W
R436	1-216-089-91	s	METAL, CHIP 47k 5% 1/10W
R437	1-216-089-91	s	METAL, CHIP 47k 5% 1/10W
R438	1-216-089-91	s	METAL, CHIP 47k [illegible] 1/10W
R439-443	1-216-295-91	s	RES, CHIP 0
R444	1-216-097-91	s	METAL, CHIP 100k 5% 1/10W
R445	1-216-091-00	s	METAL, CHIP 56k [illegible] 1/10W
R446	1-208-822-11	s	METAL, CHIP 47k 0.5% 1/10W
R447	1-216-089-91	s	METAL, CHIP 47k 5% 1/10W
R448	1-216-089-91	s	METAL, CHIP 47k 5% 1/10W
R449-455	1-216-295-91	s	RES, CHIP 0
R456	1-216-073-00	s	METAL, CHIP 10k 5% 1/10W
R457	1-216-073-00	s	METAL, CHIP 10k [illegible] 1/10W
R458	1-216-073-00	s	METAL, CHIP 10k 5% 1/10W
R459	1-216-025-91	s	METAL, CHIP 100 5% 1/10W
R463-468	1-216-073-00	s	METAL, CHIP 10k 5% 1/10W
R470	1-216-073-00	s	METAL, CHIP 10k 5% 1/10W

(RP-89 BOARD(ESBK-7041(UC/J)))

Ref. No. or Q'ty	Part No.	SP	Description
R471	1-216-295-91	s	RES, CHIP 0
R472	1-216-295-91	s	RES, CHIP 0
R475	1-216-295-91	s	RES, CHIP
R476	1-216-295-91	s	RES, CHIP 0
R478	1-216-295-91	s	RES, CHIP 0
R479	1-216-295-91	s	RES, CHIP 0
R501	1-216-049-91	s	METAL, CHIP 1k 5% 1/10W
R502	1-216-049-91	s	METAL, CHIP 1k 5% 1/10W
R503	1-216-049-91	s	METAL, CHIP 1k 5% 1/10W
R504	1-216-295-91	s	RES, CHIP 0
R505	1-216-295-91	s	RES, CHIP 0
R506	1-216-295-91	s	RES, CHIP 0
R507	1-216-295-91	s	RES, CHIP 0
R508	1-216-073-00	s	METAL, CHIP 10k 1/10W
R509	1-216-073-00	s	METAL, CHIP 10k 5% 1/10W
R510-524	1-216-295-91	s	RES, CHIP 0
R525	1-216-009-00	s	METAL, CHIP 22 5% 1/10W
R528	1-216-295-91	s	RES, CHIP 0
R529	1-216-295-91	s	RES, CHIP 0
R530	1-216-295-91	s	RES, CHIP 0
R531	1-216-295-91	s	RES, CHIP 0
R532-536	1-216-073-00	s	METAL, CHIP 10k 5% 1/10W
R537	1-216-295-91	s	RES, CHIP 0
R538	1-216-049-91	s	METAL, CHIP 1k 5% 1/10W
R539	1-216-089-91	s	METAL, CHIP 47k 5% 1/10W
R540	1-216-089-91	s	METAL, CHIP 47k 5% 1/10W
R541	1-216-089-91	s	METAL, CHIP 47k 5% 1/10W
R542	1-216-295-91	s	RES, CHIP 0
R543	1-216-295-91	s	RES, CHIP 0
R544	1-216-295-91	s	RES, CHIP 0
R545	1-216-009-00	s	METAL, CHIP 22 5% 1/10W
R546	1-216-097-91	s	METAL, CHIP 100k 5% 1/10W
R547	1-216-091-00	s	METAL, CHIP 56k 5% 1/10W
R548	1-208-822-11	s	METAL, CHIP 47k 0.5% 1/10W
R549	1-216-089-91		METAL, CHIP 47k 5% 1/10W
R550	1-216-089-91	s	METAL, CHIP 47k 5% 1/10W
R551	1-216-295-91	s	RES, CHIP 0
R552	1-216-295-91	s	RES, CHIP 0
R553	1-216-295-91	s	RES, CHIP 0
R554	1-216-295-91		RES, CHIP 0
R555-562	1-216-073-00	s	METAL, CHIP 10k 5% 1/10W
R563	1-216-009-00	s	METAL, CHIP 22 5% 1/10W
R565	1-216-295-91	s	RES, CHIP 0
R567	1-216-295-91	s	RES, CHIP 0
R568	1-216-295-91	s	RES, CHIP 0
R569-574	1-216-073-00	s	METAL, CHIP 10k 5% 1/10W
R575	1-216-009-00	s	METAL, CHIP 22 5% 1/10W
R576	1-216-073-00	s	METAL, CHIP 10k 5% 1/10W
R577-581	1-216-295-91	s	RES, CHIP 0
R582	1-216-073-00	s	METAL, CHIP 10k 1/10W
R583-593	1-216-295-91	s	RES, CHIP 0
R594	1-216-083-00	s	METAL, CHIP 27k 5% 1/10W
R595	1-216-295-91	s	RES, CHIP 0
R596	1-216-083-00	s	METAL, CHIP 27k 1/10W
R597-602	1-216-295-91	s	RES, CHIP 0
R604	1-208-814-11	s	METAL, CHIP 22k 0.5% 1/10W
R605	1-216-295-91	s	RES, CHIP 0
R606	1-216-295-91	s	RES, CHIP 0
R607	1-216-295-91	s	RES, CHIP 0

(RP-89 BOARD(ESBK-7041(UC/J)))

Ref. No. or Q'ty	Part No.	SP	Description
R608	1-216-073-00	s	METAL, CHIP 10k 5% 1/10W
R609	1-216-073-00	s	METAL, CHIP 10k 5% 1/10W
R610-616	1-216-295-91	s	RES, CHIP
R618	1-216-295-91	s	RES, CHIP 0
R619	1-216-009-00		METAL, CHIP 22 5% 1/10W
R642	1-216-295-91	s	RES, CHIP 0
R643	1-216-009-00	s	METAL, CHIP 22 5% 1/10W
R644	1-216-009-00	s	METAL, CHIP 22 1/10W
R651	1-216-295-91	s	RES, CHIP 0
R652	1-216-295-91	s	RES, CHIP 0
R653	1-216-295-91	s	RES, CHIP 0
R654	1-216-295-91	s	RES, CHIP 0
R655-662	1-216-073-00	s	METAL, CHIP 10k 5% 1/10W
R663	1-216-009-00	s	METAL, CHIP 22 5% 1/10W
R669-674	1-216-073-00	s	METAL, CHIP 10k 5% 1/10W
R676	1-216-073-00	s	METAL, CHIP 10k 5% 1/10W
R678	1-216-295-91	s	RES, CHIP 0
R701	1-216-049-91	s	METAL, CHIP 1k 1/10W
R702	1-216-049-91		METAL, CHIP 1k 1/10W
R703	1-216-049-91	s	METAL, CHIP 1k 1/10W
R704-710	1-216-295-91	s	RES, CHIP 0
R731	1-216-049-91	s	METAL, CHIP 1k 1/10W
R732	1-216-049-91	s	METAL, CHIP 1k 5% 1/10W
R733	1-216-049-91	s	METAL, CHIP 1k 1/10W
R734	1-216-049-91	s	METAL, CHIP 1k 1/10W
R735	1-216-295-91		RES, CHIP 0
R736-744	1-216-001-00		METAL, CHIP 10 1/10W
R762	1-216-295-91	s	RES, CHIP 0
R764	1-216-295-91	s	RES, CHIP 0
R767-778	1-216-295-91		RES, CHIP 0
R779	1-216-089-91	s	METAL, CHIP 47k 1/10W
R780	1-216-089-91	s	METAL, CHIP 47k 5% 1/10W
R781	1-216-049-91	s	METAL, CHIP 1k 5% 1/10W
R782	1-216-049-91	s	METAL, CHIP 1k 1/10W
R783	1-216-295-91	s	RES, CHIP 0
R801	1-216-049-91		METAL, CHIP 1k 5% 1/10W
R802	1-216-049-91	s	METAL, CHIP 1k 1/10W
R803	1-216-049-91	s	METAL, CHIP 1k 1/10W
R804	1-216-295-91	s	RES, CHIP 0
R805	1-216-295-91	s	RES, CHIP 0
R806	1-216-295-91		RES, CHIP 0
R807	1-216-295-91	s	RES, CHIP 0
R809	1-216-295-91		RES, CHIP 0
R810	1-216-295-91	s	RES, CHIP 0
R811	1-216-295-91	s	RES, CHIP 0
R831	1-216-049-91	s	METAL, CHIP 1k 5% 1/10W
R832	1-216-049-91	s	METAL, CHIP 1k 1/10W
R833	1-216-049-91	s	METAL, CHIP 1k 1/10W
R834	1-216-049-91	s	METAL, CHIP 1k 1/10W
R835	1-216-295-91	s	RES, CHIP 0
R841	1-216-295-91		RES, CHIP 0
R861	1-216-295-91		RES, CHIP 0
R862	1-216-295-91	s	RES, CHIP 0
R865	1-216-295-91	s	RES, CHIP 0
R867	1-216-295-91	s	RES, CHIP 0
R870-878	1-216-295-91	s	RES, CHIP 0
R901	1-216-049-91	s	METAL, CHIP 1k 5% 1/10W
R902	1-216-049-91	s	METAL, CHIP 1k 5% 1/10W
R903	1-216-049-91	s	METAL, CHIP 1k 1/10W

(RP-89 BOARD(ESBK-7041(UC/J)))

Ref. No. or Q'ty	Part No.	SP	Description
R904-911	1-216-295-91	s	RES, CHIP 0
R931	1-216-049-91	s	METAL, CHIP 1k 5% 1/10W
R932	1-216-049-91	s	METAL, CHIP 1k 5% 1/10W
R933	1-216-049-91	s	METAL, CHIP 1k 5% 1/10W
R934	1-216-049-91	s	METAL, CHIP 1k 5% 1/10W
R935	1-216-295-91	s	RES, CHIP 0
R941	1-216-295-91	s	RES, CHIP 0
R961	1-216-295-91	s	RES, CHIP 0
R962	1-216-295-91	s	RES, CHIP 0
R965	1-216-295-91	■	RES, CHIP 0
R967	1-216-295-91	s	RES, CHIP 0
R970-974	1-216-295-91	s	RES, CHIP 0
R1003	1-216-295-91	s	RES, CHIP 0
R1004	1-216-049-91	s	METAL, CHIP 1k 5% 1/10W
R1005	1-216-049-91	s	METAL, CHIP 1k 5% 1/10W
R1006	1-216-049-91	s	METAL, CHIP 1k 5% 1/10W
R1007	1-216-121-91	s	METAL, CHIP 1M 5% 1/10W
R1008	1-216-295-91	s	RES, CHIP 0
R1009	1-216-295-91	s	RES, CHIP 0
R1010	1-216-049-91	s	METAL, CHIP 1k 5% 1/10W
R1011	1-216-295-91	s	RES, CHIP 0
R1012	1-216-049-91	■	METAL, CHIP 1k 5% 1/10W
R1013	1-216-049-91	s	METAL, CHIP 1k 5% 1/10W
R1014	1-216-049-91	s	METAL, CHIP 1k 5% 1/10W
R1015	1-216-049-91	s	METAL, CHIP 1k 5% 1/10W
R1017	1-216-295-91	s	RES, CHIP 0
R1018	1-216-017-91	s	METAL, CHIP 47 5% 1/10W
R1019	1-216-017-91	s	METAL, CHIP 47 5% 1/10W
R1020	1-216-041-00	s	METAL, CHIP 470 5% 1/10W
R1021	1-216-073-00	■	METAL, CHIP 10k 5% 1/10W
R1022	1-216-017-91	s	METAL, CHIP 47 5% 1/10W
R1023	1-216-065-00	■	METAL, CHIP 4.7k ■ 1/10W
R1024	1-216-017-91	s	METAL, CHIP 47 5% 1/10W
R1025	1-216-073-00	s	METAL, CHIP 10k 5% 1/10W
R1026	1-216-295-91	■	RES, CHIP 0
R1027	1-216-049-91	s	METAL, CHIP 1k 5% 1/10W
R1028	1-216-049-91	s	METAL, CHIP 1k 5% 1/10W
R1029	1-216-049-91	s	METAL, CHIP 1k 5% 1/10W
R1030	1-216-121-91	s	METAL, CHIP 1M 5% 1/10W
R1031	1-216-049-91	■	METAL, CHIP 1k ■ 1/10W
R1032	1-216-295-91	s	RES, CHIP 0
R1033	1-216-049-91	s	METAL, CHIP 1k 5% 1/10W
R1034	1-216-049-91	s	METAL, CHIP 1k 5% 1/10W
R1035	1-216-049-91	■	METAL, CHIP 1k 5% 1/10W
R1036	1-216-049-91	■	METAL, CHIP 1k 5% 1/10W
R1038	1-216-295-91	s	RES, CHIP 0
R1039	1-216-017-91	s	METAL, CHIP 47 5% 1/10W
R1040	1-216-017-91	s	METAL, CHIP 47 5% 1/10W
R1041	1-216-041-00	s	METAL, CHIP 470 5% 1/10W
R1042	1-216-073-00	s	METAL, CHIP 10k 5% 1/10W
R1043	1-216-017-91	s	METAL, CHIP 47 5% 1/10W
R1044	1-216-065-00	s	METAL, CHIP 4.7k 5% 1/10W
R1045	1-216-017-91	s	METAL, CHIP 47 5% 1/10W
R1046	1-216-073-00	s	METAL, CHIP 10k 5% 1/10W
R1058	1-216-025-91	s	METAL, CHIP 100 ■■ 1/10W
R1059	1-216-025-91	s	METAL, CHIP 100 ■■ 1/10W
R1060	1-216-025-91	s	METAL, CHIP 100 5% 1/10W
R1061	1-216-295-91	s	RES, CHIP 0
R1062	1-216-295-91	s	RES, CHIP 0

(RP-89 BOARD(ESBK-7041(UC/J)))

Ref. No. or Q'ty	Part No.	SP	Description
R1063	1-216-295-91	■	RES, CHIP 0
RB1-21	1-239-621-11	s	RESISTOR BLOCK, CHIP 22x4
RB701	1-239-711-11	■	RESISTOR BLOCK, CHIP 0x4
RB702	1-239-711-11	■	RESISTOR BLOCK, CHIP 0x4
RB703	1-239-711-11	s	RESISTOR BLOCK, CHIP 0x4
RB712	1-239-711-11	s	RESISTOR BLOCK, CHIP 0x4
RB713	1-239-711-11	s	RESISTOR BLOCK, CHIP 0x4
RB714	1-239-711-11	s	RESISTOR BLOCK, CHIP 0x4
RB715	1-239-711-11	■	RESISTOR BLOCK, CHIP 0x4
RB716	1-239-303-11	■	RESISTOR BLOCK, CHIP 1kx8
RB717	1-239-303-11	s	RESISTOR BLOCK, CHIP 1kx8
RB763	1-236-904-11	■	RESISTOR BLOCK, CHIP 1kx4
RB764	1-236-904-11	■	RESISTOR BLOCK, CHIP 1kx4
RB801-807	1-239-711-11	s	RESISTOR BLOCK, CHIP 0x4
RB812	1-239-303-11	s	RESISTOR BLOCK, CHIP 1kx8
RB813	1-239-303-11	■	RESISTOR BLOCK, CHIP 1kx8
RB901-907	1-239-711-11	■	RESISTOR BLOCK, CHIP 0x4
RB912	1-239-303-11	■	RESISTOR BLOCK, CHIP 1kx8
RB913	1-239-303-11	s	RESISTOR BLOCK, CHIP 1kx8
TP1-13	1-535-877-22	■	CHIP, CHECKER
TP15	1-535-877-22	o	CHIP, CHECKER
TP16	1-535-877-22	o	CHIP, CHECKER
TP18	1-535-877-22	o	CHIP, CHECKER
TP19	1-535-877-22	o	CHIP, CHECKER
TP21	1-535-877-22	o	CHIP, CHECKER
TP22	1-535-877-22	o	CHIP, CHECKER
TP24-38	1-535-877-22	o	CHIP, CHECKER
TP101-110	1-535-877-22	o	CHIP, CHECKER
TP114-118	1-535-877-22	o	CHIP, CHECKER
TP206-210	1-535-877-22	o	CHIP, CHECKER
TP218	1-535-877-22	o	CHIP, CHECKER
TP301-310	1-535-877-22	o	CHIP, CHECKER
TP314	1-535-877-22	o	CHIP, CHECKER
TP315	1-535-877-22	■	CHIP, CHECKER
TP316	1-535-877-22	■	CHIP, CHECKER
TP317	1-535-877-22	o	CHIP, CHECKER
TP318	1-535-877-22	o	CHIP, CHECKER
TP406-410	1-535-877-22	o	CHIP, CHECKER
TP418	1-535-877-22	o	CHIP, CHECKER
TP501-515	1-535-877-22	o	CHIP, CHECKER
TP517	1-535-877-22	o	CHIP, CHECKER
TP518	1-535-877-22	o	CHIP, CHECKER
TP604-609	1-535-877-22	o	CHIP, CHECKER
TP701-709	1-535-877-22	o	CHIP, CHECKER

(RP-89 BOARD(ESBK-7041(UC/J)))

Ref. No. or Q'ty	Part No.	SP	Description
TP761-767			
	1-535-877-22	■	CHIP, CHECKER
TP801-809			
	1-535-877-22	o	CHIP, CHECKER
TP861	1-535-877-22	o	CHIP, CHECKER
TP862	1-535-877-22	o	CHIP, CHECKER
TP863	1-535-877-22	o	CHIP, CHECKER
TP901-909			
	1-535-877-22	o	CHIP, CHECKER
TP961	1-535-877-22	■	CHIP, CHECKER
TP962	1-535-877-22	o	CHIP, CHECKER
TP963	1-535-877-22	o	CHIP, CHECKER
TP1001-1008			
	1-535-877-22	o	CHIP, CHECKER

RP-89A BOARD(ESBK-7041(CE))

Ref. No. or Q'ty	Part No.	SP	Description
1pc	A-8311-019-A	o	MOUNTED CIRCUIT BOARD, RP-89A
1pc	3-603-857-01	o	CN PLATE,RP
1pc	7-682-947-01	s	SCREW +PSW 3x6
1pc	7-682-948-01	s	SCREW +PSW 3x8
1pc	7-685-862-09	■	SCREW +BVTT 2.6x6 (S)
C1	1-163-038-91	s	CERAMIC, CHIP 0.1uF 25V
C2	1-126-392-11	s	ELECT, CHIP 100uF 20% 6.3V
C3	1-163-038-91	s	CERAMIC, CHIP 0.1uF 25V
C4	1-126-392-11	s	ELECT, CHIP 100uF 20% 6.3V
C5	1-126-392-11	s	ELECT, CHIP 100uF 20% 6.3V
C6	1-126-392-11	s	ELECT, CHIP 100uF 20% 6.3V
C7	1-126-392-11	s	ELECT, CHIP 100uF 20% 6.3V
C8-17	1-163-038-91	s	CERAMIC, CHIP 0.1uF 25V
C18-27	1-126-396-11	s	ELECT, CHIP 47uF 20% 16V
C28	1-163-038-91	s	CERAMIC, CHIP 0.1uF 25V
C29	1-163-038-91	s	CERAMIC, CHIP 0.1uF 25V
C30	1-163-038-91	s	CERAMIC, CHIP 0.1uF 25V
C31	1-163-038-91	s	CERAMIC, CHIP 0.1uF 25V
C32	1-126-399-11	■	ELECT, CHIP 10uF 20% 35V
C33	1-126-399-11	s	ELECT, CHIP 10uF 20% 35V
C34	1-163-038-91	s	CERAMIC, CHIP 0.1uF 25V
C35	1-163-038-91	s	CERAMIC, CHIP 0.1uF 25V
C36	1-163-038-91	s	CERAMIC, CHIP 0.1uF 25V
C37	1-126-398-11	s	ELECT, CHIP 4.7uF 20% 35V
C38	1-163-038-91	s	CERAMIC, CHIP 0.1uF 25V
C39	1-126-398-11	s	ELECT, CHIP 4.7uF 20% 35V
C40	1-163-038-91	■	CERAMIC, CHIP 0.1uF 25V
C41	1-163-038-91	s	CERAMIC, CHIP 0.1uF 25V
C42	1-163-038-91	s	CERAMIC, CHIP 0.1uF 25V
C43	1-163-038-91	s	CERAMIC, CHIP 0.1uF 25V
C44	1-126-398-11	■	ELECT, CHIP 4.7uF 20% 35V
C45	1-126-398-11	s	ELECT, CHIP 4.7uF 20% 35V
C46	1-126-392-11	s	ELECT, CHIP 100uF 20% 6.3V
C47	1-163-038-91	s	CERAMIC, CHIP 0.1uF 25V
C48	1-163-038-91	s	CERAMIC, CHIP 0.1uF 25V
C49	1-126-392-11	s	ELECT, CHIP 100uF 20% 6.3V
C50	1-163-038-91	■	CERAMIC, CHIP 0.1uF 25V
C101-112	1-163-038-91	■	CERAMIC, CHIP 0.1uF 25V
C113	1-126-393-11	s	ELECT, CHIP 33uF 20% 10V
C114	1-126-393-11	s	ELECT, CHIP 33uF 20% 10V
C115	1-163-038-91	■	CERAMIC, CHIP 0.1uF 25V
C116	1-163-038-91	s	CERAMIC, CHIP 0.1uF 25V
C117	1-126-396-11	s	ELECT, CHIP 47uF 20% 16V
C118	1-163-038-91	s	CERAMIC, CHIP 0.1uF 25V
C119	1-163-038-91	■	CERAMIC, CHIP 0.1uF 25V
C120	1-163-038-91	■	CERAMIC, CHIP 0.1uF 25V
C121	1-163-038-91	s	CERAMIC, CHIP 0.1uF 25V
C122	1-126-396-11	s	ELECT, CHIP 47uF 20% 16V
C123	1-163-038-91	s	CERAMIC, CHIP 0.1uF 25V
C124	1-163-251-11	s	CERAMIC, CHIP 100pF 5% 50V
C125	1-163-038-91	s	CERAMIC, CHIP 0.1uF 25V
C126	1-126-396-11	s	ELECT, CHIP 47uF 20% 16V
C127	1-163-251-11	s	CERAMIC, CHIP 100pF 5% 50V
C128	1-163-038-91	s	CERAMIC, CHIP 0.1uF 25V
C130	1-163-038-91	s	CERAMIC, CHIP 0.1uF 25V
C132	1-163-038-91	s	CERAMIC, CHIP 0.1uF 25V
C134	1-163-038-91	s	CERAMIC, CHIP 0.1uF 25V
C135	1-163-038-91	■	CERAMIC, CHIP 0.1uF 25V
C139	1-163-038-91	s	CERAMIC, CHIP 0.1uF 25V

(RP-89A BOARD(ESBK-7041(CE)))

Ref. No. or Q'ty	Part No.	SP	Description
C142	1-126-396-11	■	ELECT, CHIP 47uF 20% 16V
C144	1-163-275-11	s	CERAMIC, CHIP 0.001uF 5% 50V
C145	1-163-275-11	s	CERAMIC, CHIP 0.001uF 5% 50V
C147	1-163-038-91	s	CERAMIC, CHIP 0.1uF 25V
C148	1-126-394-11	s	ELECT, CHIP 10uF 20% 16V
C149	1-163-038-91	s	CERAMIC, CHIP 0.1uF 25V
C150	1-109-994-11	s	CERAMIC, CHIP 2.2uF 10% 10V
C151	1-163-038-91	s	CERAMIC, CHIP 0.1uF 25V
C152	1-163-251-11	■	CERAMIC, CHIP 100pF 5% 50V
C153	1-163-033-91	s	CERAMIC, CHIP 0.022uF 50V
C154	1-163-038-91	s	CERAMIC, CHIP 0.1uF 25V
C158	1-163-033-91	s	CERAMIC, CHIP 0.022uF 50V
C210	1-163-038-91	s	CERAMIC, CHIP 0.1uF 25V
C211	1-163-038-91	s	CERAMIC, CHIP 0.1uF 25V
C217	1-126-396-11	s	ELECT, CHIP 47uF 20% 16V
C218	1-163-038-91	s	CERAMIC, CHIP 0.1uF 25V
C219	1-163-038-91	s	CERAMIC, CHIP 0.1uF 25V
C220	1-163-038-91	s	CERAMIC, CHIP 0.1uF 25V
C221	1-163-038-91	s	CERAMIC, CHIP 0.1uF 25V
C222	1-126-396-11	s	ELECT, CHIP 47uF 20% 16V
C223	1-163-038-91	s	CERAMIC, CHIP 0.1uF 25V
C224	1-163-251-11	■	CERAMIC, CHIP 100pF 5% 50V
C225	1-163-038-91	s	CERAMIC, CHIP 0.1uF 25V
C226	1-126-396-11	s	ELECT, CHIP 47uF 20% 16V
C227	1-163-251-11	s	CERAMIC, CHIP 100pF 5% 50V
C230	1-163-038-91	■	CERAMIC, CHIP 0.1uF 25V
C232	1-163-038-91	s	CERAMIC, CHIP 0.1uF 25V
C234	1-163-038-91	s	CERAMIC, CHIP 0.1uF 25V
C235	1-163-038-91	■	CERAMIC, CHIP 0.1uF 25V
C239	1-163-038-91	s	CERAMIC, CHIP 0.1uF 25V
C242	1-126-396-11	s	ELECT, CHIP 47uF 20% 16V
C244	1-163-275-11	s	CERAMIC, CHIP 0.001uF 5% 50V
C245	1-163-275-11	s	CERAMIC, CHIP 0.001uF 5% 50V
C247	1-163-038-91	s	CERAMIC, CHIP 0.1uF 25V
C248	1-126-394-11	s	ELECT, CHIP 10uF 20% 16V
C249	1-163-038-91	s	CERAMIC, CHIP 0.1uF 25V
C250	1-109-994-11	s	CERAMIC, CHIP 2.2uF 10% 10V
C251	1-163-038-91	■	CERAMIC, CHIP 0.1uF 25V
C252	1-163-251-11	s	CERAMIC, CHIP 100pF 5% 50V
C253	1-163-033-91	s	CERAMIC, CHIP 0.022uF 50V
C254	1-163-038-91	s	CERAMIC, CHIP 0.1uF 25V
C258	1-163-033-91	s	CERAMIC, CHIP 0.022uF 50V
C301-312	1-163-038-91	s	CERAMIC, CHIP 0.1uF 25V
C313	1-126-393-11	s	ELECT, CHIP 33uF 20% 10V
C314	1-126-393-11	s	ELECT, CHIP 33uF 20% 10V
C315	1-163-038-91	s	CERAMIC, CHIP 0.1uF 25V
C316	1-163-038-91	s	CERAMIC, CHIP 0.1uF 25V
C317	1-126-396-11	s	ELECT, CHIP 47uF 20% 16V
C318	1-163-038-91	s	CERAMIC, CHIP 0.1uF 25V
C319	1-163-038-91	s	CERAMIC, CHIP 0.1uF 25V
C320	1-163-038-91	s	CERAMIC, CHIP 0.1uF 25V
C321	1-163-038-91	s	CERAMIC, CHIP 0.1uF 25V
C322	1-126-396-11	s	ELECT, CHIP 47uF 20% 16V
C323	1-163-038-91	s	CERAMIC, CHIP 0.1uF 25V
C324	1-163-251-11	s	CERAMIC, CHIP 100pF 5% 50V
C325	1-163-038-91	s	CERAMIC, CHIP 0.1uF 25V
C326	1-126-396-11	s	ELECT, CHIP 47uF 20% 16V
C327	1-163-251-11	s	CERAMIC, CHIP 100pF ■ 50V
C328	1-163-038-91	s	CERAMIC, CHIP 0.1uF 25V

(RP-89A BOARD(ESBK-7041(CE)))

Ref. No. or Q'ty	Part No.	SP	Description
C330	1-163-038-91	s	CERAMIC, CHIP 0.1uF 25V
C332	1-163-038-91	■	CERAMIC, CHIP 0.1uF 25V
C334	1-163-038-91	s	CERAMIC, CHIP 0.1uF 25V
C335	1-163-038-91	s	CERAMIC, CHIP 0.1uF 25V
C339	1-163-038-91	s	CERAMIC, CHIP 0.1uF 25V
C342	1-126-396-11	s	ELECT, CHIP 47uF 20% 16V
C344	1-163-275-11	s	CERAMIC, CHIP 0.001uF ■ 50V
C345	1-163-275-11	■	CERAMIC, CHIP 0.001uF 5% 50V
C347	1-163-038-91	s	CERAMIC, CHIP 0.1uF 25V
C348	1-126-394-11	s	ELECT, CHIP 10uF 20% 16V
C349	1-163-038-91	s	CERAMIC, CHIP 0.1uF 25V
C350	1-109-994-11	s	CERAMIC, CHIP 2.2uF 10% 10V
C351	1-163-038-91	s	CERAMIC, CHIP 0.1uF 25V
C352	1-163-251-11	s	CERAMIC, CHIP 100pF ■ 50V
C353	1-163-033-91	s	CERAMIC, CHIP 0.022uF 50V
C354	1-163-038-91	s	CERAMIC, CHIP 0.1uF 25V
C358	1-163-033-91	s	CERAMIC, CHIP 0.022uF 50V
C410	1-163-038-91	■	CERAMIC, CHIP 0.1uF 25V
C411	1-163-038-91	s	CERAMIC, CHIP 0.1uF 25V
C417	1-126-396-11	s	ELECT, CHIP 47uF 20% 16V
C418	1-163-038-91	s	CERAMIC, CHIP 0.1uF 25V
C419	1-163-038-91	s	CERAMIC, CHIP 0.1uF 25V
C420	1-163-038-91	s	CERAMIC, CHIP 0.1uF 25V
C421	1-163-038-91	s	CERAMIC, CHIP 0.1uF 25V
C422	1-126-396-11	s	ELECT, CHIP 47uF 20% 16V
C423	1-163-038-91	s	CERAMIC, CHIP 0.1uF 25V
C424	1-163-251-11	s	CERAMIC, CHIP 100pF 5% 50V
C425	1-163-038-91	s	CERAMIC, CHIP 0.1uF 25V
C426	1-126-396-11	s	ELECT, CHIP 47uF 20% 16V
C427	1-163-251-11	■	CERAMIC, CHIP 100pF 5% 50V
C430	1-163-038-91	s	CERAMIC, CHIP 0.1uF 25V
C432	1-163-038-91	s	CERAMIC, CHIP 0.1uF 25V
C434	1-163-038-91	s	CERAMIC, CHIP 0.1uF 25V
C435	1-163-038-91	s	CERAMIC, CHIP 0.1uF 25V
C439	1-163-038-91	■	CERAMIC, CHIP 0.1uF 25V
C442	1-126-396-11	s	ELECT, CHIP 47uF 20% 16V
C444	1-163-275-11	s	CERAMIC, CHIP 0.001uF 5% 50V
C445	1-163-275-11	s	CERAMIC, CHIP 0.001uF ■ 50V
C447	1-163-038-91	s	CERAMIC, CHIP 0.1uF 25V
C448	1-126-394-11	s	ELECT, CHIP 10uF 20% 16V
C449	1-163-038-91	■	CERAMIC, CHIP 0.1uF 25V
C450	1-109-994-11	s	CERAMIC, CHIP 2.2uF 10% 10V
C451	1-163-038-91	s	CERAMIC, CHIP 0.1uF 25V
C452	1-163-251-11	s	CERAMIC, CHIP 100pF ■ 50V
C453	1-163-033-91	s	CERAMIC, CHIP 0.022uF 50V
C454	1-163-038-91	s	CERAMIC, CHIP 0.1uF 25V
C458	1-163-033-91	s	CERAMIC, CHIP 0.022uF 50V
C501-512	1-163-038-91	s	CERAMIC, CHIP 0.1uF 25V
C513	1-126-393-11	s	ELECT, CHIP 33uF 20% 10V
C514	1-126-393-11	s	ELECT, CHIP 33uF 20% 10V
C515	1-163-038-91	s	CERAMIC, CHIP 0.1uF 25V
C516	1-163-038-91	s	CERAMIC, CHIP 0.1uF 25V
C517	1-126-396-11	■	ELECT, CHIP 47uF 20% 16V
C518	1-163-038-91	s	CERAMIC, CHIP 0.1uF 25V
C519	1-163-038-91	s	CERAMIC, CHIP 0.1uF 25V
C520	1-163-038-91	s	CERAMIC, CHIP 0.1uF 25V
C521	1-163-038-91	s	CERAMIC, CHIP 0.1uF 25V
C522	1-126-396-11	s	ELECT, CHIP 47uF 20% 16V
C523	1-163-038-91	s	CERAMIC, CHIP 0.1uF 25V

(RP-89A BOARD(ESBK-7041(CE)))

Ref. No. or Q'ty	Part No.	SP	Description
C524	1-163-038-91	■	CERAMIC, CHIP 0.1uF 25V
C525	1-163-038-91	s	CERAMIC, CHIP 0.1uF 25V
C526	1-163-038-91	s	CERAMIC, CHIP 0.1uF 25V
C527	1-163-251-11	s	CERAMIC, CHIP 100pF 5% 50V
C528	1-163-251-11	s	CERAMIC, CHIP 100pF 5% 50V
C529	1-163-038-91	■	CERAMIC, CHIP 0.1uF 25V
C530	1-163-038-91	s	CERAMIC, CHIP 0.1uF 25V
C531	1-163-038-91	s	CERAMIC, CHIP 0.1uF 25V
C532	1-126-396-11	s	ELECT, CHIP 47uF 20% 16V
C533	1-163-038-91	s	CERAMIC, CHIP 0.1uF 25V
C534	1-163-038-91	s	CERAMIC, CHIP 0.1uF 25V
C535	1-126-396-11	s	ELECT, CHIP 47uF 20% 16V
C536	1-163-038-91	s	CERAMIC, CHIP 0.1uF 25V
C538	1-163-038-91	s	CERAMIC, CHIP 0.1uF 25V
C542	1-126-396-11	s	ELECT, CHIP 47uF 20% 16V
C543	1-163-275-11	s	CERAMIC, CHIP 0.001uF 5% 50V
C544	1-163-275-11	■	CERAMIC, CHIP 0.001uF 5% 50V
C546	1-163-038-91	s	CERAMIC, CHIP 0.1uF 25V
C547	1-126-394-11	s	ELECT, CHIP 10uF 20% 16V
C548	1-163-038-91	s	CERAMIC, CHIP 0.1uF 25V
C549	1-109-994-11	s	CERAMIC, CHIP 2.2uF 10% 10V
C550	1-163-038-91	s	CERAMIC, CHIP 0.1uF 25V
C551	1-163-251-11	■	CERAMIC, CHIP 100pF 5% 50V
C552	1-163-033-91	s	CERAMIC, CHIP 0.022uF 50V
C553	1-163-038-91	s	CERAMIC, CHIP 0.1uF 25V
C554	1-163-033-91	■	CERAMIC, CHIP 0.022uF 50V
C555	1-126-396-11	■	ELECT, CHIP 47uF 20% 16V
C556	1-163-038-91	s	CERAMIC, CHIP 0.1uF 25V
C560	1-163-033-91	s	CERAMIC, CHIP 0.022uF 50V
C612	1-126-396-11	s	ELECT, CHIP 47uF 20% 16V
C617	1-126-396-11	s	ELECT, CHIP 47uF 20% 16V
C618	1-163-038-91	s	CERAMIC, CHIP 0.1uF 25V
C619	1-163-038-91	■	CERAMIC, CHIP 0.1uF 25V
C620	1-163-038-91	■	CERAMIC, CHIP 0.1uF 25V
C621	1-163-038-91	s	CERAMIC, CHIP 0.1uF 25V
C622	1-126-396-11	s	ELECT, CHIP 47uF 20% 16V
C623	1-163-038-91	s	CERAMIC, CHIP 0.1uF 25V
C652	1-163-033-91	s	CERAMIC, CHIP 0.022uF 50V
C654	1-163-033-91	s	CERAMIC, CHIP 0.022uF 50V
C701-712	1-163-038-91	s	CERAMIC, CHIP 0.1uF 25V
C713	1-126-393-11	s	ELECT, CHIP 33uF 20% 10V
C714	1-126-393-11	■	ELECT, CHIP 33uF 20% 10V
C715-722	1-163-038-91	■	CERAMIC, CHIP 0.1uF 25V
C723	1-126-393-11	s	ELECT, CHIP 33uF 20% 10V
C724	1-163-038-91	s	CERAMIC, CHIP 0.1uF 25V
C725	1-163-038-91	s	CERAMIC, CHIP 0.1uF 25V
C726	1-163-038-91	s	CERAMIC, CHIP 0.1uF 25V
C727	1-163-038-91	s	CERAMIC, CHIP 0.1uF 25V
C728	1-126-393-11	s	ELECT, CHIP 33uF 20% 10V
C729	1-163-038-91	s	CERAMIC, CHIP 0.1uF 25V
C731	1-163-038-91	s	CERAMIC, CHIP 0.1uF 25V
C732	1-163-038-91	s	CERAMIC, CHIP 0.1uF 25V
C733	1-126-393-11	s	ELECT, CHIP 33uF 20% 10V
C734-760	1-163-038-91	s	CERAMIC, CHIP 0.1uF 25V
C761	1-126-393-11	s	ELECT, CHIP 33uF 20% 10V
C762-775	1-163-038-91	■	CERAMIC, CHIP 0.1uF 25V
C788-796	1-163-038-91	s	CERAMIC, CHIP 0.1uF 25V
C797	1-126-393-11	s	ELECT, CHIP 33uF 20% 10V
C798-812	1-163-038-91	s	CERAMIC, CHIP 0.1uF 25V

(RP-89A BOARD(ESBK-7041(CE)))

Ref. No. or Q'ty	Part No.	SP	Description
C813	1-126-393-11	■	ELECT, CHIP 33uF 20% 10V
C814	1-126-393-11	s	ELECT, CHIP 33uF 20% 10V
C815-822	1-163-038-91	s	CERAMIC, CHIP 0.1uF 25V
C823	1-126-393-11	s	ELECT, CHIP 33uF 20% 10V
C831	1-163-038-91	s	CERAMIC, CHIP 0.1uF 25V
C832	1-126-393-11	s	ELECT, CHIP 33uF 20% 10V
C833-859	1-163-038-91	s	CERAMIC, CHIP 0.1uF 25V
C864	1-163-038-91	■	CERAMIC, CHIP 0.1uF 25V
C865	1-163-038-91	s	CERAMIC, CHIP 0.1uF 25V
C879	1-163-038-91	s	CERAMIC, CHIP 0.1uF 25V
C885	1-126-393-11	s	ELECT, CHIP 33uF 20% 10V
C894	1-126-393-11	s	ELECT, CHIP 33uF 20% 10V
C899	1-163-038-91	s	CERAMIC, CHIP 0.1uF 25V
C913	1-126-393-11	■	ELECT, CHIP 33uF 20% 10V
C914	1-126-393-11	■	ELECT, CHIP 33uF 20% 10V
C923	1-126-393-11	s	ELECT, CHIP 33uF 20% 10V
C931	1-163-038-91	■	CERAMIC, CHIP 0.1uF 25V
C932	1-126-393-11	■	ELECT, CHIP 33uF 20% 10V
C987	1-126-393-11	s	ELECT, CHIP 33uF 20% 10V
C994	1-126-393-11	s	ELECT, CHIP 33uF 20% 10V
C1001	1-164-232-11	s	CERAMIC, CHIP 0.01uF 10% 100V
C1015	1-126-393-11	s	ELECT, CHIP 33uF 20% 10V
C1016	1-163-038-91	s	CERAMIC, CHIP 0.1uF 25V
C1019	1-163-009-11	■	CERAMIC, CHIP 0.001uF 10% 50V
C1020	1-104-760-11	s	CERAMIC, CHIP 0.047uF 10% 50V
C1021	1-163-009-11	s	CERAMIC, CHIP 0.001uF 10% 50V
C1022	1-163-009-11	s	CERAMIC, CHIP 0.001uF 10% 50V
C1023	1-135-149-21	s	TANTALUM, CHIP 2.2uF 10% 10V
C1024	1-164-232-11	s	CERAMIC, CHIP 0.01uF 10% 100V
C1038	1-126-393-11	s	ELECT, CHIP 33uF 20% 10V
C1039	1-163-038-91	s	CERAMIC, CHIP 0.1uF 25V
C1042	1-163-009-11	s	CERAMIC, CHIP 0.001uF 10% 50V
C1043	1-104-760-11	■	CERAMIC, CHIP 0.047uF 10% 50V
C1044	1-163-009-11	s	CERAMIC, CHIP 0.001uF 10% 50V
C1045	1-163-009-11	■	CERAMIC, CHIP 0.001uF 10% 50V
C1046	1-135-149-21	s	TANTALUM, CHIP 2.2uF 10% 10V
C1050	1-163-227-11	s	CERAMIC, CHIP 10pF 5% 50V
C1051	1-163-227-11	■	CERAMIC, CHIP 10pF 5% 50V
CN301	1-778-261-11	o	CONNECTOR, BB 124P, MALE
CN302	1-778-261-11	o	CONNECTOR, BB 124P, MALE
CN303	1-778-261-11	o	CONNECTOR, BB 124P, MALE
CN701	1-695-953-21	s	CONNECTOR, BB, CHIP 30P, FEMALE
CN702	1-695-953-21	s	CONNECTOR, BB, CHIP 30P, FEMALE
CNI763	1-251-351-11	o	SOCKET, IC 44P
CT701	1-141-322-11	s	CAP, TRIMMER, CHIP 20pF
CT702	1-141-322-11	s	CAP, TRIMMER, CHIP 20pF
D1-10	8-719-938-72	s	DIODE SB01-05CP
D101	8-719-041-39	s	DIODE KV1470
D201	8-719-041-39	■	DIODE KV1470
D301	8-719-041-39	s	DIODE KV1470
D401	8-719-041-39	s	DIODE KV1470
D501	8-719-041-39	s	DIODE KV1470
D1001	8-719-027-95	s	DIODE HSM88WK
D1002	8-719-041-39	s	DIODE KV1470
D1003	8-719-027-95	■	DIODE HSM88WK
D1004	8-719-041-39	s	DIODE KV1470
E1-5	1-535-877-22	o	CHIP, CHECKER

(RP-89A BOARD(ESBK-7041(CE)))

Ref. No. or Q'ty	Part No.	SP	Description
E101	1-535-877-22	■	CHIP, CHECKER
E102	1-535-877-22	o	CHIP, CHECKER
E103	1-535-877-22	o	CHIP, CHECKER
E202	1-535-877-22	o	CHIP, CHECKER
E203	1-535-877-22	o	CHIP, CHECKER
E301	1-535-877-22	o	CHIP, CHECKER
E302	1-535-877-22	o	CHIP, CHECKER
E303	1-535-877-22	o	CHIP, CHECKER
E402	1-535-877-22	o	CHIP, CHECKER
E403	1-535-877-22	■	CHIP, CHECKER
E501	1-535-877-22	■	CHIP, CHECKER
E502	1-535-877-22	■	CHIP, CHECKER
E503	1-535-877-22	o	CHIP, CHECKER
E603	1-535-877-22	o	CHIP, CHECKER
E701	1-535-877-22	o	CHIP, CHECKER
E702	1-535-877-22	o	CHIP, CHECKER
E730	1-535-877-22	■	CHIP, CHECKER
E760	1-535-877-22	o	CHIP, CHECKER
E761	1-535-877-22	o	CHIP, CHECKER
E762	1-535-877-22	■	CHIP, CHECKER
E763	1-535-877-22	o	CHIP, CHECKER
E801	1-535-877-22	o	CHIP, CHECKER
E803	1-535-877-22	o	CHIP, CHECKER
E830	1-535-877-22	o	CHIP, CHECKER
E860	1-535-877-22	o	CHIP, CHECKER
E861	1-535-877-22	o	CHIP, CHECKER
E862	1-535-877-22	■	CHIP, CHECKER
E901	1-535-877-22	o	CHIP, CHECKER
E903	1-535-877-22	o	CHIP, CHECKER
E931	1-535-877-22	o	CHIP, CHECKER
E960	1-535-877-22	o	CHIP, CHECKER
E961	1-535-877-22	■	CHIP, CHECKER
E962	1-535-877-22	o	CHIP, CHECKER
E1001-1010	1-535-877-22	o	CHIP, CHECKER
F1	⚠ 1-533-477-11	s	FUSE, CHIP 8A 125V
FL1-6	1-239-719-11	s	FILTER, NOISE, CHIP
FL7-12	1-239-642-21	s	EMIFIL ARRAY, CHIP
FL13-18	1-239-719-11	s	FILTER, NOISE, CHIP
IC1	8-759-259-77	s	IC PQ20VZ5U
IC4	8-759-186-47	s	IC TC74VHC138F
IC5	8-759-186-47	s	IC TC74VHC138F
IC6	8-759-259-77	■	IC PQ20VZ5U
IC7	8-759-186-47	s	IC TC74VHC138F
IC8	8-759-515-09	s	IC SN74ALS374ANS
IC9	8-759-186-77	s	IC TC74VHC541F
IC10	8-759-186-77	s	IC TC74VHC541F
IC11	8-759-259-77	s	IC PQ20VZ5U
IC12	8-759-925-76	s	IC SN74HC08ANS
IC13	8-759-359-54	s	IC SN74ALS244CNS-E20
IC14	8-759-934-41	s	IC SN74ALS240ANS
IC15	8-759-186-60	s	IC TC74VHC240F
IC16	8-759-259-77	s	IC PQ20VZ5U
IC17	8-759-939-92	s	IC SN74ALS541NS
IC18	8-759-186-57	s	IC TC74VHC175F
IC19	8-759-245-45	s	IC TA78L09F
IC20	8-759-186-77	s	IC TC74VHC541F
IC21	8-759-259-77	s	IC PQ20VZ5U

(RP-89A BOARD(ESBK-7041(CE)))

Ref. No. or Q'ty	Part No.	SP	Description
IC102	8-759-371-04	s	IC HM514260CJ7-Z
IC103	8-759-371-04	s	IC HM514260CJ7-Z
IC104	8-759-337-74	s	IC HM62V256LT8Z
IC105	8-752-374-96	s	IC CXD2190R
IC108	8-759-906-53	s	IC TL062CPS
IC110	8-759-095-67	s	IC TC74ACT541FS
IC111	8-759-326-71	s	IC CXD8517Q
IC112	8-759-095-67	s	IC TC74ACT541FS
IC113	8-759-327-04	■	IC CXD2913Q
IC114	8-759-196-97	■	IC TC7SH32FU-TE85R
IC204	8-759-337-74	s	IC HM62V256LT8Z
IC205	8-752-374-96	s	IC CXD2190R
IC208	8-759-906-53	s	IC TL062CPS
IC210	8-759-095-67	s	IC TC74ACT541FS
IC211	8-759-326-71	s	IC CXD8517Q
IC213	8-759-327-04	s	IC CXD2913Q
IC214	8-759-196-97	s	IC TC7SH32FU-TE85R
IC302	8-759-371-04	s	IC HM514260CJ7-Z
IC303	8-759-371-04	s	IC HM514260CJ7-Z
IC304	8-759-337-74	s	IC HM62V256LT8Z
IC305	8-752-374-96	s	IC CXD2190R
IC308	8-759-906-53	■	IC TL062CPS
IC310	8-759-095-67	s	IC TC74ACT541FS
IC311	8-759-326-71	s	IC CXD8517Q
IC312	8-759-095-67	■	IC TC74ACT541FS
IC313	8-759-327-04	s	IC CXD2913Q
IC314	8-759-196-97	s	IC TC7SH32FU-TE85R
IC404	8-759-337-74	s	IC HM62V256LT8Z
IC405	8-752-374-96	■	IC CXD2190R
IC408	8-759-906-53	s	IC TL062CPS
IC410	8-759-095-67	s	IC TC74ACT541FS
IC411	8-759-326-71	s	IC CXD8517Q
IC413	8-759-327-04	s	IC CXD2913Q
IC414	8-759-196-97	s	IC TC7SH32FU-TE85R
IC502	8-759-371-04	s	IC HM514260CJ7-Z
IC503	8-759-371-04	s	IC HM514260CJ7-Z
IC504	8-759-337-74	s	IC HM62V256LT8Z
IC505	8-752-374-96	s	IC CXD2190R
IC508	8-759-906-53	■	IC TL062CPS
IC509	8-759-174-16	■	IC TC74VHC244F
IC510	8-759-095-67	s	IC TC74ACT541FS
IC511	8-759-326-71	s	IC CXD8517Q
IC512	8-759-271-86	s	IC TC7SH04FU
IC513	8-759-926-17	s	IC SN74HC153ANS
IC515	8-759-186-38	s	IC TC74VHC32F
IC518	8-759-327-04	s	IC CXD2913Q
IC604	8-759-337-74	s	IC HM62V256LT8Z
IC605	8-752-374-96	s	IC CXD2190R
IC611	8-759-326-71	s	IC CXD8517Q
IC702	8-759-371-04	s	IC HM514260CJ7-Z
IC703	8-759-371-04	s	IC HM514260CJ7-Z
IC704	8-759-327-06	s	IC CXD2186R
IC730	8-759-327-05	s	IC CXD2184R
IC731	8-759-328-28	■	IC ZA4024
IC732	8-759-328-28	s	IC ZA4024
IC733	8-759-328-28	s	IC ZA4024
IC760	8-759-175-27	s	IC TC74VHC574F
IC761	8-759-175-27	s	IC TC74VHC574F
IC762	8-759-174-16	s	IC TC74VHC244F

(RP-89A BOARD(ESBK-7041(CE)))

Ref. No. or Q'ty	Part No.	SP	Description
IC764	8-759-186-39	s	IC TC74VHC74F
IC765	8-759-175-27	s	IC TC74VHC574F
IC766	8-759-175-27	s	IC TC74VHC574F
IC767	8-759-175-27	s	IC TC74VHC574F
IC769	8-759-327-31	s	IC CXD2183R
IC770	8-752-373-89	s	IC CXD2185R
IC771	8-759-186-60	s	IC TC74VHC240F
IC772	8-759-174-16	s	IC TC74VHC244F
IC773	8-759-081-42	s	IC TC74VHC00F
IC774	8-759-186-38	s	IC TC74VHC32F
IC776	8-759-186-44	s	IC TC74VHC125F
IC802	8-759-371-04	■	IC HM514260CJ7-Z
IC803	8-759-371-04	s	IC HM514260CJ7-Z
IC804	8-759-327-06	s	IC CXD2186R
IC830	8-759-327-05	s	IC CXD2184R
IC831	8-759-328-28	s	IC ZA4024
IC832	8-759-328-28	s	IC ZA4024
IC833	8-759-328-28	s	IC ZA4024
IC860	8-759-175-27	s	IC TC74VHC574F
IC861	8-759-175-27	■	IC TC74VHC574F
IC862	8-759-174-16	s	IC TC74VHC244F
IC863	8-759-515-12	s	IC SN74ALS574BNS
IC864	8-759-515-12	■	IC SN74ALS574BNS
IC866	8-759-327-31	s	IC CXD2183R
IC867	8-752-373-89	■	IC CXD2185R
IC902	8-759-371-04	s	IC HM514260CJ7-Z
IC903	8-759-371-04	s	IC HM514260CJ7-Z
IC904	8-759-327-06	s	IC CXD2186R
IC930	8-759-327-05	s	IC CXD2184R
IC931	8-759-328-28	s	IC ZA4024
IC932	8-759-328-28	s	IC ZA4024
IC933	8-759-328-28	■	IC ZA4024
IC960	8-759-175-27	s	IC TC74VHC574F
IC961	8-759-175-27	s	IC TC74VHC574F
IC962	8-759-174-16	s	IC TC74VHC244F
IC963	8-759-515-12	s	IC SN74ALS574BNS
IC964	8-759-515-12	s	IC SN74ALS574BNS
IC966	8-759-327-31	s	IC CXD2183R
IC967	8-752-373-89	s	IC CXD2185R
IC1001	8-752-375-05	s	IC CXD2191R
IC1002	8-752-375-05	s	IC CXD2191R
IC1003	8-759-174-16	s	IC TC74VHC244F
IC1004	8-759-174-16	s	IC TC74VHC244F
IC1005	8-759-174-16	s	IC TC74VHC244F
L1	1-412-520-11	s	INDUCTOR 3.9uH
L2	1-412-520-11	s	INDUCTOR 3.9uH
L3	1-412-520-11	s	INDUCTOR 3.9uH
L4	1-412-519-11	s	INDUCTOR 3.3uH
L6	1-410-381-11	s	INDUCTOR, CHIP 10uH
L101	1-410-381-11	s	INDUCTOR, CHIP 10uH
L102	1-410-381-11	s	INDUCTOR, CHIP 10uH
L103	1-410-381-11	s	INDUCTOR, CHIP 10uH
L106	1-410-381-11	s	INDUCTOR, CHIP 10uH
L108	1-410-381-11	s	INDUCTOR, CHIP 10uH
L111	1-410-381-11	s	INDUCTOR, CHIP 10uH
L203	1-410-381-11	s	INDUCTOR, CHIP 10uH
L206	1-410-381-11	s	INDUCTOR, CHIP 10uH
L208	1-410-381-11	s	INDUCTOR, CHIP 10uH
L211	1-410-381-11	s	INDUCTOR, CHIP 10uH

(RP-89A BOARD(ESBK-7041(CE)))

Ref. No. or Q'ty	Part No.	SP	Description
L301	1-410-381-11	s	INDUCTOR, CHIP 10uH
L302	1-410-381-11	s	INDUCTOR, CHIP 10uH
L303	1-410-381-11	s	INDUCTOR, CHIP 10uH
L306	1-410-381-11	■	INDUCTOR, CHIP 10uH
L308	1-410-381-11	s	INDUCTOR, CHIP 10uH
L311	1-410-381-11	s	INDUCTOR, CHIP 10uH
L403	1-410-381-11	s	INDUCTOR, CHIP 10uH
L406	1-410-381-11	s	INDUCTOR, CHIP 10uH
L408	1-410-381-11	s	INDUCTOR, CHIP 10uH
L411	1-410-381-11	s	INDUCTOR, CHIP 10uH
L501-506	1-410-381-11	s	INDUCTOR, CHIP 10uH
L508	1-410-381-11	s	INDUCTOR, CHIP 10uH
L510	1-410-381-11	■	INDUCTOR, CHIP 10uH
L603	1-410-381-11	s	INDUCTOR, CHIP 10uH
L610	1-410-381-11	s	INDUCTOR, CHIP 10uH
L701	1-410-381-11	s	INDUCTOR, CHIP 10uH
L702	1-410-381-11	s	INDUCTOR, CHIP 10uH
L703	1-410-381-11	s	INDUCTOR, CHIP 10uH
L731	1-410-381-11	s	INDUCTOR, CHIP 10uH
L761	1-410-381-11	■	INDUCTOR, CHIP 10uH
L763	1-410-381-11	s	INDUCTOR, CHIP 10uH
L764	1-410-381-11	s	INDUCTOR, CHIP 10uH
L801	1-410-381-11	s	INDUCTOR, CHIP 10uH
L802	1-410-381-11	s	INDUCTOR, CHIP 10uH
L803	1-410-381-11	s	INDUCTOR, CHIP 10uH
L831	1-410-381-11	s	INDUCTOR, CHIP 10uH
L862	1-410-381-11	s	INDUCTOR, CHIP 10uH
L863	1-410-381-11	s	INDUCTOR, CHIP 10uH
L901	1-410-381-11	■	INDUCTOR, CHIP 10uH
L902	1-410-381-11	s	INDUCTOR, CHIP 10uH
L903	1-410-381-11	s	INDUCTOR, CHIP 10uH
L931	1-410-381-11	s	INDUCTOR, CHIP 10uH
L962	1-410-381-11	s	INDUCTOR, CHIP 10uH
L963	1-410-381-11	s	INDUCTOR, CHIP 10uH
L1001	1-410-381-11	s	INDUCTOR, CHIP 10uH
L1002	1-410-740-31	s	INDUCTOR CHIP 0.82uH
L1003	1-410-381-11	s	INDUCTOR, CHIP 10uH
L1004	1-410-740-31	s	INDUCTOR CHIP 0.82uH
LV107	1-411-984-11	s	COIL, VARIABLE
LV207	1-411-984-11	s	COIL, VARIABLE
LV307	1-411-984-11	s	COIL, VARIABLE
LV407	1-411-984-11	s	COIL, VARIABLE
LV507	1-411-984-11	■	COIL, VARIABLE
R1	1-216-061-00	s	METAL, CHIP 3.3k 5% 1/10W
R2	1-216-009-00	s	METAL, CHIP 22 5% 1/10W
R3	1-216-009-00	s	METAL, CHIP 22 5% 1/10W
R4	1-216-009-00	s	METAL, CHIP 22 5% 1/10W
R5	1-216-009-00	s	METAL, CHIP 22 5% 1/10W
R6	1-216-061-00	s	METAL, CHIP 3.3k 5% 1/10W
R7	1-216-061-00	s	METAL, CHIP 3.3k 5% 1/10W
R8	1-216-061-00	s	METAL, CHIP 3.3k 5% 1/10W
R9	1-216-061-00	s	METAL, CHIP 3.3k 5% 1/10W
R10	1-216-009-00	s	METAL, CHIP 22 5% 1/10W
R11	1-216-025-91	s	METAL, CHIP 100 5% 1/10W
R12	1-216-009-00	■	METAL, CHIP 22 5% 1/10W
R13	1-216-089-91	s	METAL, CHIP 47k 5% 1/10W
R16-20	1-216-295-91	s	RES, CHIP 0
R21	1-216-603-11	■	METAL, CHIP 10 0.5% 1/10W

(RP-89A BOARD(ESBK-7041(CE)))

Ref. No. or Q'ty	Part No.	SP	Description
R22	1-208-767-11	s	METAL, CHIP 240 0.5% 1/10W
R23	1-216-652-11	s	METAL, CHIP 1.1k 0.5% 1/10W
R24	1-216-651-11	s	METAL, CHIP 1k 0.5% 1/10W
R25	1-216-603-11	s	METAL, CHIP 10 0.5% 1/10W
R26	1-208-767-11	s	METAL, CHIP 240 0.5% 1/10W
R27	1-216-652-11	s	METAL, CHIP 1.1k 0.5% 1/10W
R28	1-216-651-11	s	METAL, CHIP 1k 0.5% 1/10W
R29	1-216-603-11	s	METAL, CHIP 10 0.5% 1/10W
R30	1-208-767-11	s	METAL, CHIP 240 0.5% 1/10W
R31	1-216-652-11	s	METAL, CHIP 1.1k 0.5% 1/10W
R32	1-216-651-11	s	METAL, CHIP 1k 0.5% 1/10W
R33	1-216-603-11	s	METAL, CHIP 10 0.5% 1/10W
R34	1-208-767-11	s	METAL, CHIP 240 0.5% 1/10W
R35	1-216-652-11	s	METAL, CHIP 1.1k 0.5% 1/10W
R36	1-216-651-11	s	METAL, CHIP 1k 0.5% 1/10W
R37	1-216-603-11	■	METAL, CHIP 10 0.5% 1/10W
R38	1-208-767-11	s	METAL, CHIP 240 0.5% 1/10W
R39	1-216-652-11	s	METAL, CHIP 1.1k 0.5% 1/10W
R40	1-216-651-11	s	METAL, CHIP 1k 0.5% 1/10W
R41	1-216-009-00	s	METAL, CHIP 22 5% 1/10W
R45	1-216-009-00	s	METAL, CHIP 22 5% 1/10W
R46	1-216-009-00	s	METAL, CHIP 22 5% 1/10W
R47	1-216-009-00	s	METAL, CHIP 22 5% 1/10W
R48	1-216-009-00	s	METAL, CHIP 22 5% 1/10W
R49-53	1-216-025-91	s	METAL, CHIP 100 5% 1/10W
R54	1-216-295-91	s	RES, CHIP 0
R55	1-216-061-00	■	METAL, CHIP 3.3k 5% 1/10W
R57	1-216-295-91	■	RES, CHIP 0
R101	1-216-049-91	s	METAL, CHIP 1k 5% 1/10W
R102	1-216-049-91	s	METAL, CHIP 1k 5% 1/10W
R103	1-216-049-91	s	METAL, CHIP 1k 5% 1/10W
R104	1-216-295-91	■	RES, CHIP 0
R105	1-216-295-91	s	RES, CHIP 0
R106	1-216-295-91	s	RES, CHIP 0
R107	1-216-295-91	s	RES, CHIP 0
R108	1-216-073-00	s	METAL, CHIP 10k 5% 1/10W
R109	1-216-295-91	s	RES, CHIP 0
R110	1-216-295-91	s	RES, CHIP 0
R111	1-216-295-91	s	RES, CHIP 0
R112	1-216-295-91	s	RES, CHIP 0
R114-120	1-216-295-91	s	RES, CHIP 0
R121	1-216-083-00	s	METAL, CHIP 27k 5% 1/10W
R122	1-216-295-91	■	RES, CHIP 0
R123	1-216-295-91	s	RES, CHIP 0
R124	1-216-295-91	s	RES, CHIP 0
R125	1-216-083-00	s	METAL, CHIP 27k 5% 1/10W
R126-133	1-216-295-91	s	RES, CHIP 0
R135	1-216-049-91	s	METAL, CHIP 1k 5% 1/10W
R136	1-216-089-91	s	METAL, CHIP 47k 5% 1/10W
R137	1-216-089-91	s	METAL, CHIP 47k 5% 1/10W
R138	1-216-089-91	s	METAL, CHIP 47k 5% 1/10W
R139-143	1-216-295-91	s	RES, CHIP 0
R144	1-216-097-91	s	METAL, CHIP 100k 5% 1/10W
R145	1-216-091-00	s	METAL, CHIP 56k 5% 1/10W
R146	1-208-822-11	s	METAL, CHIP 47k 0.5% 1/10W
R147	1-216-089-91	s	METAL, CHIP 47k 5% 1/10W
R148	1-216-089-91	s	METAL, CHIP 47k 5% 1/10W
R149-155	1-216-295-91	s	RES, CHIP 0
R156	1-216-073-00	s	METAL, CHIP 10k 5% 1/10W

(RP-89A BOARD(ESBK-7041(CE)))

Ref. No. or Q'ty	Part No.	SP	Description
R157	1-216-073-00	■	METAL, CHIP 10k 5% 1/10W
R158	1-216-073-00	s	METAL, CHIP 10k 5% 1/10W
R159	1-216-025-91	s	METAL, CHIP 100 5% 1/10W
R163-168	1-216-073-00	s	METAL, CHIP 10k 5% 1/10W
R169	1-216-009-00	s	METAL, CHIP 22 5% 1/10W
R170	1-216-073-00	s	METAL, CHIP 10k 5% 1/10W
R171	1-216-295-91	s	RES, CHIP 0
R172	1-216-295-91	■	RES, CHIP 0
R173	1-216-009-00	s	METAL, CHIP 22 5% 1/10W
R175	1-216-295-91	s	RES, CHIP 0
R176	1-216-295-91	s	RES, CHIP 0
R178	1-216-295-91	s	RES, CHIP 0
R179	1-216-295-91	s	RES, CHIP 0
R208	1-216-073-00	s	METAL, CHIP 10k 5% 1/10W
R209	1-216-295-91	s	RES, CHIP 0
R210	1-216-295-91	s	RES, CHIP 0
R211	1-216-295-91	■	RES, CHIP 0
R212	1-216-295-91	■	RES, CHIP 0
R214	1-216-295-91	s	RES, CHIP 0
R215	1-216-295-91	s	RES, CHIP 0
R216	1-216-295-91	s	RES, CHIP 0
R217	1-216-295-91	s	RES, CHIP 0
R218	1-216-009-00	s	METAL, CHIP 22 5% 1/10W
R219	1-216-295-91	s	RES, CHIP 0
R220	1-216-295-91	s	RES, CHIP 0
R221	1-216-083-00	s	METAL, CHIP 27k 5% 1/10W
R225	1-216-083-00	s	METAL, CHIP 27k 5% 1/10W
R226-233	1-216-295-91	s	RES, CHIP 0
R235	1-216-049-91	s	METAL, CHIP 1k 5% 1/10W
R236	1-216-089-91	■	METAL, CHIP 47k 5% 1/10W
R237	1-216-089-91	s	METAL, CHIP 47k 5% 1/10W
R238	1-216-089-91	s	METAL, CHIP 47k 5% 1/10W
R239-243	1-216-295-91	s	RES, CHIP 0
R244	1-216-097-91	s	METAL, CHIP 100k 5% 1/10W
R245	1-216-091-00	■	METAL, CHIP 56k 5% 1/10W
R246	1-208-822-11	s	METAL, CHIP 47k 0.5% 1/10W
R247	1-216-089-91	s	METAL, CHIP 47k 5% 1/10W
R248	1-216-089-91	s	METAL, CHIP 47k 5% 1/10W
R249-255	1-216-295-91	s	RES, CHIP 0
R256	1-216-073-00	s	METAL, CHIP 10k 5% 1/10W
R257	1-216-073-00	s	METAL, CHIP 10k 5% 1/10W
R258	1-216-073-00	s	METAL, CHIP 10k 5% 1/10W
R259	1-216-025-91	s	METAL, CHIP 100 5% 1/10W
R263-268	1-216-073-00	s	METAL, CHIP 10k 5% 1/10W
R270	1-216-073-00	s	METAL, CHIP 10k 5% 1/10W
R271	1-216-295-91	s	RES, CHIP 0
R272	1-216-295-91	s	RES, CHIP 0
R275	1-216-295-91	s	RES, CHIP 0
R276	1-216-295-91	s	RES, CHIP 0
R278	1-216-295-91	■	RES, CHIP 0
R279	1-216-295-91	s	RES, CHIP 0
R301	1-216-049-91	s	METAL, CHIP 1k 5% 1/10W
R302	1-216-049-91	s	METAL, CHIP 1k 5% 1/10W
R303	1-216-049-91	s	METAL, CHIP 1k 5% 1/10W
R305	1-216-295-91	s	RES, CHIP 0
R307	1-216-295-91	s	RES, CHIP 0
R308	1-216-073-00	■	METAL, CHIP 10k 5% 1/10W
R309	1-216-295-91	■	RES, CHIP 0
R310	1-216-295-91	s	RES, CHIP 0

(RP-89A BOARD(ESBK-7041(CE)))

Ref. No. or Q'ty	Part No.	SP	Description
R311	1-216-295-91	■	RES, CHIP 0
R312	1-216-295-91	s	RES, CHIP 0
R314-320	1-216-295-91	s	RES, CHIP 0
R321	1-216-083-00	s	METAL, CHIP 27k 5% 1/10W
R322	1-216-295-91	s	RES, CHIP 0
R323	1-216-295-91	s	RES, CHIP 0
R324	1-216-295-91	s	RES, CHIP 0
R325	1-216-083-00	s	METAL, CHIP 27k 5% 1/10W
R326-333	1-216-295-91	s	RES, CHIP 0
R335	1-216-049-91	s	METAL, CHIP 1k 5% 1/10W
R336	1-216-089-91	s	METAL, CHIP 47k 5% 1/10W
R337	1-216-089-91	s	METAL, CHIP 47k 5% 1/10W
R338	1-216-089-91	s	METAL, CHIP 47k 5% 1/10W
R339-343	1-216-295-91	s	RES, CHIP 0
R344	1-216-097-91	s	METAL, CHIP 100k 5% 1/10W
R345	1-216-091-00	s	METAL, CHIP 56k 5% 1/10W
R346	1-208-822-11	■	METAL, CHIP 47k 0.5% 1/10W
R347	1-216-089-91	s	METAL, CHIP 47k 5% 1/10W
R348	1-216-089-91	s	METAL, CHIP 47k 5% 1/10W
R349-355	1-216-295-91	s	RES, CHIP 0
R356	1-216-073-00	s	METAL, CHIP 10k 5% 1/10W
R357	1-216-073-00	s	METAL, CHIP 10k 5% 1/10W
R358	1-216-073-00	s	METAL, CHIP 10k 5% 1/10W
R359	1-216-025-91	s	METAL, CHIP 100 5% 1/10W
R363-368	1-216-073-00	s	METAL, CHIP 10k 5% 1/10W
R369	1-216-009-00	s	METAL, CHIP 22 5% 1/10W
R370	1-216-073-00	s	METAL, CHIP 10k 5% 1/10W
R371	1-216-295-91	s	RES, CHIP 0
R372	1-216-295-91	s	RES, CHIP 0
R375	1-216-295-91	s	RES, CHIP 0
R376	1-216-295-91	s	RES, CHIP 0
R378	1-216-295-91	s	RES, CHIP 0
R379	1-216-295-91	s	RES, CHIP 0
R408	1-216-073-00	s	METAL, CHIP 10k 5% 1/10W
R409	1-216-295-91	s	RES, CHIP 0
R410	1-216-295-91	s	RES, CHIP 0
R411	1-216-295-91	s	RES, CHIP 0
R412	1-216-295-91	s	RES, CHIP 0
R414	1-216-295-91	s	RES, CHIP 0
R415	1-216-295-91	s	RES, CHIP 0
R416	1-216-295-91	s	RES, CHIP 0
R417	1-216-295-91	s	RES, CHIP 0
R418	1-216-009-00	s	METAL, CHIP 22 5% 1/10W
R419	1-216-295-91	■	RES, CHIP 0
R420	1-216-295-91	s	RES, CHIP 0
R421	1-216-083-00	s	METAL, CHIP 27k 5% 1/10W
R425	1-216-083-00	s	METAL, CHIP 27k 5% 1/10W
R426-433	1-216-295-91	s	RES, CHIP 0
R435	1-216-049-91	s	METAL, CHIP 1k 5% 1/10W
R436	1-216-089-91	s	METAL, CHIP 47k 5% 1/10W
R437	1-216-089-91	s	METAL, CHIP 47k 5% 1/10W
R438	1-216-089-91	s	METAL, CHIP 47k 5% 1/10W
R439-443	1-216-295-91	s	RES, CHIP 0
R444	1-216-097-91	s	METAL, CHIP 100k 5% 1/10W
R445	1-216-091-00	s	METAL, CHIP 56k 5% 1/10W
R446	1-208-822-11	s	METAL, CHIP 47k 0.5% 1/10W
R447	1-216-089-91	■	METAL, CHIP 47k 5% 1/10W
R448	1-216-089-91	s	METAL, CHIP 47k 5% 1/10W
R449-455	1-216-295-91	s	RES, CHIP 0

(RP-89A BOARD(ESBK-7041(CE)))

Ref. No. or Q'ty	Part No.	SP	Description
R456	1-216-073-00	s	METAL, CHIP 10k 5% 1/10W
R457	1-216-073-00	■	METAL, CHIP 10k 5% 1/10W
R458	1-216-073-00	s	METAL, CHIP 10k 5% 1/10W
R459	1-216-025-91	s	METAL, CHIP 100 [illegible] 1/10W
R463-468	1-216-073-00	s	METAL, CHIP 10k [illegible] 1/10W
R470	1-216-073-00	s	METAL, CHIP 10k 5% 1/10W
R471	1-216-295-91	s	RES, CHIP 0
R472	1-216-295-91	s	RES, CHIP 0
R475	1-216-295-91	■	RES, CHIP 0
R476	1-216-295-91	s	RES, CHIP 0
R478	1-216-295-91	s	RES, CHIP 0
R479	1-216-295-91	s	RES, CHIP 0
R501	1-216-049-91	s	METAL, CHIP 1k 5% 1/10W
R502	1-216-049-91	s	METAL, CHIP 1k [illegible] 1/10W
R503	1-216-049-91	s	METAL, CHIP 1k 5% 1/10W
R504	1-216-295-91	s	RES, CHIP 0
R505	1-216-295-91	■	RES, CHIP 0
R506	1-216-295-91	■	RES, CHIP 0
R507	1-216-295-91	■	RES, CHIP 0
R508	1-216-073-00	s	METAL, CHIP 10k [illegible] 1/10W
R509	1-216-073-00	s	METAL, CHIP 10k 5% 1/10W
R510-524	1-216-295-91	s	RES, CHIP 0
R525	1-216-009-00	s	METAL, CHIP 22 5% 1/10W
R528	1-216-295-91	■	RES, CHIP 0
R529	1-216-295-91	s	RES, CHIP 0
R530	1-216-295-91	s	RES, CHIP 0
R531	1-216-295-91	■	RES, CHIP 0
R532-536	1-216-073-00	■	METAL, CHIP 10k 5% 1/10W
R537	1-216-295-91	s	RES, CHIP 0
R538	1-216-049-91	s	METAL, CHIP 1k [illegible] 1/10W
R539	1-216-089-91	■	METAL, CHIP 47k 5% 1/10W
R540	1-216-089-91	s	METAL, CHIP 47k 5% 1/10W
R541	1-216-089-91	s	METAL, CHIP 47k [illegible] 1/10W
R542	1-216-295-91	s	RES, CHIP 0
R543	1-216-295-91	s	RES, CHIP [illegible]
R544	1-216-295-91	■	RES, CHIP 0
R545	1-216-009-00	■	METAL, CHIP 22 5% 1/10W
R546	1-216-097-91	s	METAL, CHIP 100k 5% 1/10W
R547	1-216-091-00	s	METAL, CHIP 56k 5% 1/10W
R548	1-208-822-11	s	METAL, CHIP 47k 0.5% 1/10W
R549	1-216-089-91	s	METAL, CHIP 47k 5% 1/10W
R550	1-216-089-91	■	METAL, CHIP 47k 5% 1/10W
R551	1-216-295-91	s	RES, CHIP 0
R552	1-216-295-91	■	RES, CHIP 0
R553	1-216-295-91	s	RES, CHIP 0
R554	1-216-295-91	s	RES, CHIP 0
R555-562	1-216-073-00	s	METAL, CHIP 10k [illegible] 1/10W
R563	1-216-009-00	s	METAL, CHIP 22 5% 1/10W
R565	1-216-295-91	■	RES, CHIP 0
R567	1-216-295-91	s	RES, CHIP 0
R568	1-216-295-91	s	RES, CHIP 0
R569-574	1-216-073-00	s	METAL, CHIP 10k 5% 1/10W
R575	1-216-009-00	s	METAL, CHIP 22 5% 1/10W
R576	1-216-073-00	s	METAL, CHIP 10k 5% 1/10W
R577-581	1-216-295-91	s	RES, CHIP 0
R582	1-216-073-00	s	METAL, CHIP 10k 5% 1/10W
R583-593	1-216-295-91	s	RES, CHIP 0
R594	1-216-083-00	s	METAL, CHIP 27k 5% 1/10W
R595	1-216-295-91	■	RES, CHIP 0

(RP-89A BOARD(ESBK-7041(CE)))

Ref. No. or Q'ty	Part No.	SP	Description
R596	1-216-083-00	s	METAL, CHIP 27k 1/10W
R597-602	1-216-295-91	s	RES, CHIP 0
R604	1-208-814-11	s	METAL, CHIP 22k 0.5% 1/10W
R605	1-216-295-91	s	RES, CHIP 0
R606	1-216-295-91	s	RES, CHIP 0
R607	1-216-295-91	s	RES, CHIP 0
R608	1-216-073-00	s	METAL, CHIP 10k 5% 1/10W
R609	1-216-073-00	s	METAL, CHIP 10k 5% 1/10W
R610-616	1-216-295-91	s	RES, CHIP 0
R618	1-216-295-91	s	RES, CHIP 0
R619	1-216-009-00	s	METAL, CHIP 22 5% 1/10W
R642	1-216-295-91	s	RES, CHIP 0
R643	1-216-009-00	s	METAL, CHIP 22 5% 1/10W
R644	1-216-009-00	s	METAL, CHIP 22 5% 1/10W
R651	1-216-295-91	s	RES, CHIP 0
R652	1-216-295-91	s	RES, CHIP 0
R653	1-216-295-91	s	RES, CHIP 0
R654	1-216-295-91	s	RES, CHIP 0
R655-662	1-216-073-00	s	METAL, CHIP 10k 1/10W
R663	1-216-009-00	s	METAL, CHIP 22 5% 1/10W
R669-674	1-216-073-00	s	METAL, CHIP 10k 5% 1/10W
R676	1-216-073-00	s	METAL, CHIP 10k 5% 1/10W
R678	1-216-295-91	s	RES, CHIP 0
R701	1-216-049-91	s	METAL, CHIP 1k 1/10W
R702	1-216-049-91	s	METAL, CHIP 1k 5% 1/10W
R703	1-216-049-91	s	METAL, CHIP 1k 5% 1/10W
R704-710	1-216-295-91	s	RES, CHIP 0
R731	1-216-049-91	s	METAL, CHIP 1k 5% 1/10W
R732	1-216-049-91	s	METAL, CHIP 1k 5% 1/10W
R733	1-216-049-91	s	METAL, CHIP 1k 5% 1/10W
R734	1-216-049-91	s	METAL, CHIP 1k 5% 1/10W
R735	1-216-295-91	s	RES, CHIP 0
R736-744	1-216-001-00	s	METAL, CHIP 10 5% 1/10W
R767-778	1-216-295-91	s	RES, CHIP 0
R779	1-216-089-91	s	METAL, CHIP 47k 5% 1/10W
R780	1-216-089-91	s	METAL, CHIP 47k 5% 1/10W
R783	1-216-295-91	s	RES, CHIP 0
R801	1-216-049-91	s	METAL, CHIP 1k 1/10W
R802	1-216-049-91	s	METAL, CHIP 1k 5% 1/10W
R803	1-216-049-91	s	METAL, CHIP 1k 5% 1/10W
R804	1-216-295-91	s	RES, CHIP 0
R805	1-216-295-91	s	RES, CHIP 0
R806	1-216-295-91	s	RES, CHIP 0
R807	1-216-295-91	s	RES, CHIP 0
R809	1-216-295-91	s	RES, CHIP 0
R810	1-216-295-91	s	RES, CHIP 0
R811	1-216-295-91	s	RES, CHIP 0
R831	1-216-049-91	s	METAL, CHIP 1k 5% 1/10W
R832	1-216-049-91	s	METAL, CHIP 1k 1/10W
R833	1-216-049-91	s	METAL, CHIP 1k 1/10W
R834	1-216-049-91	s	METAL, CHIP 1k 5% 1/10W
R835	1-216-295-91	s	RES, CHIP 0
R840	1-216-295-91	s	RES, CHIP 0
R870-878	1-216-295-91	s	RES, CHIP 0
R901	1-216-049-91	s	METAL, CHIP 1k 5% 1/10W
R902	1-216-049-91	s	METAL, CHIP 1k 5% 1/10W
R903	1-216-049-91	s	METAL, CHIP 1k 5% 1/10W
R904	1-216-295-91	s	RES, CHIP 0
R911	1-216-295-91	s	RES, CHIP 0

(RP-89A BOARD(ESBK-7041(CE)))

Ref. No. or Q'ty	Part No.	SP	Description
R931	1-216-049-91	s	METAL, CHIP 1k 5% 1/10W
R932	1-216-049-91	s	METAL, CHIP 1k 5% 1/10W
R933	1-216-049-91	s	METAL, CHIP 1k 1/10W
R934	1-216-049-91	s	METAL, CHIP 1k 5% 1/10W
R935	1-216-295-91	s	RES, CHIP 0
R940	1-216-295-91	s	RES, CHIP 0
R970-978	1-216-295-91	s	RES, CHIP 0
R1001	1-216-295-91	s	RES, CHIP 0
R1002	1-216-295-91	s	RES, CHIP 0
R1003	1-216-295-91	s	RES, CHIP 0
R1004	1-216-049-91	s	METAL, CHIP 1k 5% 1/10W
R1005	1-216-049-91	s	METAL, CHIP 1k 5% 1/10W
R1006	1-216-049-91	s	METAL, CHIP 1k 5% 1/10W
R1007	1-216-121-91	s	METAL, CHIP 1M 5% 1/10W
R1010	1-216-049-91	s	METAL, CHIP 1k 1/10W
R1011	1-216-295-91	s	RES, CHIP 0
R1012	1-216-049-91	s	METAL, CHIP 1k 1/10W
R1013	1-216-049-91	s	METAL, CHIP 1k 1/10W
R1014	1-216-049-91	s	METAL, CHIP 1k 1/10W
R1015	1-216-049-91	s	METAL, CHIP 1k 5% 1/10W
R1017	1-216-295-91	s	RES, CHIP 0
R1018	1-216-017-91	s	METAL, CHIP 47 1/10W
R1019	1-216-017-91	s	METAL, CHIP 47 5% 1/10W
R1020	1-216-041-00	s	METAL, CHIP 470 1/10W
R1021	1-216-073-00	s	METAL, CHIP 10k 5% 1/10W
R1022	1-216-017-91	s	METAL, CHIP 47 5% 1/10W
R1023	1-216-065-00	s	METAL, CHIP 4.7k 1/10W
R1024	1-216-017-91	s	METAL, CHIP 47 5% 1/10W
R1025	1-216-073-00	s	METAL, CHIP 10k 5% 1/10W
R1026	1-216-295-91	s	RES, CHIP 0
R1027	1-216-049-91	s	METAL, CHIP 1k 5% 1/10W
R1028	1-216-049-91	s	METAL, CHIP 1k 5% 1/10W
R1029	1-216-049-91	s	METAL, CHIP 1k 5% 1/10W
R1030	1-216-121-91	s	METAL, CHIP 1M 5% 1/10W
R1031	1-216-049-91	s	METAL, CHIP 1k 5% 1/10W
R1032	1-216-295-91	s	RES, CHIP 0
R1033	1-216-049-91	s	METAL, CHIP 1k 5% 1/10W
R1034	1-216-049-91	s	METAL, CHIP 1k 5% 1/10W
R1035	1-216-049-91	s	METAL, CHIP 1k 1/10W
R1036	1-216-049-91	s	METAL, CHIP 1k 5% 1/10W
R1038	1-216-295-91	s	RES, CHIP 0
R1039	1-216-017-91	s	METAL, CHIP 47 1/10W
R1040	1-216-017-91	s	METAL, CHIP 47 1/10W
R1041	1-216-041-00	s	METAL, CHIP 470 5% 1/10W
R1042	1-216-073-00	s	METAL, CHIP 10k 5% 1/10W
R1043	1-216-017-91	s	METAL, CHIP 47 5% 1/10W
R1044	1-216-065-00	s	METAL, CHIP 4.7k 5% 1/10W
R1045	1-216-017-91	s	METAL, CHIP 47 5% 1/10W
R1046	1-216-073-00	s	METAL, CHIP 10k 5% 1/10W
R1047-1057	1-216-295-91	s	RES, CHIP 0
R1058	1-216-025-91	s	METAL, CHIP 100 5% 1/10W
R1059	1-216-025-91	s	METAL, CHIP 100 5% 1/10W
R1060	1-216-025-91	s	METAL, CHIP 100 5% 1/10W
R1062	1-216-295-91	s	RES, CHIP 0
R1063	1-216-295-91	s	RES, CHIP 0
RB1-21	1-239-621-11	s	RESISTOR BLOCK, CHIP 22x4
RB701	1-239-711-11	s	RESISTOR BLOCK, CHIP 0x4

(RP-89A BOARD(ESBK-7041(CE)))

Ref. No. or Q'ty	Part No.	SP	Description
RB702	1-239-711-11	s	RESISTOR BLOCK, CHIP 0x4
RB703	1-239-711-11	s	RESISTOR BLOCK, CHIP 0x4
RB712	1-239-711-11	s	RESISTOR BLOCK, CHIP 0x4
RB713	1-239-711-11	s	RESISTOR BLOCK, CHIP 0x4
RB714	1-239-711-11	s	RESISTOR BLOCK, CHIP 0x4
RB715	1-239-711-11	s	RESISTOR BLOCK, CHIP 0x4
RB716	1-239-303-11	s	RESISTOR BLOCK, CHIP 1kx8
RB717	1-239-303-11	s	RESISTOR BLOCK, CHIP 1kx8
RB761	1-239-711-11	s	RESISTOR BLOCK, CHIP 0x4
RB762	1-239-711-11	s	RESISTOR BLOCK, CHIP 0x4
RB801-807	1-239-711-11	s	RESISTOR BLOCK, CHIP 0x4
RB812	1-239-303-11	s	RESISTOR BLOCK, CHIP 1kx8
RB813	1-239-303-11	s	RESISTOR BLOCK, CHIP 1kx8
RB861	1-239-711-11	s	RESISTOR BLOCK, CHIP 0x4
RB862	1-239-711-11	s	RESISTOR BLOCK, CHIP 0x4
RB901-907	1-239-711-11	s	RESISTOR BLOCK, CHIP 0x4
RB912	1-239-303-11	s	RESISTOR BLOCK, CHIP 1kx8
RB913	1-239-303-11	s	RESISTOR BLOCK, CHIP 1kx8
RB961	1-239-711-11	s	RESISTOR BLOCK, CHIP 0x4
RB962	1-239-711-11	s	RESISTOR BLOCK, CHIP 0x4
TP1-13	1-535-877-22	o	CHIP, CHECKER
TP15	1-535-877-22	o	CHIP, CHECKER
TP16	1-535-877-22	o	CHIP, CHECKER
TP18	1-535-877-22	o	CHIP, CHECKER
TP19	1-535-877-22	■	CHIP, CHECKER
TP21	1-535-877-22	■	CHIP, CHECKER
TP22	1-535-877-22	o	CHIP, CHECKER
TP24-38	1-535-877-22	o	CHIP, CHECKER
TP101-110	1-535-877-22	■	CHIP, CHECKER
TP114-118	1-535-877-22	o	CHIP, CHECKER
TP206-210	1-535-877-22	■	CHIP, CHECKER
TP218	1-535-877-22	o	CHIP, CHECKER
TP301-310	1-535-877-22	o	CHIP, CHECKER
TP314-318	1-535-877-22	o	CHIP, CHECKER
TP406-410	1-535-877-22	■	CHIP, CHECKER
TP418	1-535-877-22	o	CHIP, CHECKER
TP501-518	1-535-877-22	o	CHIP, CHECKER
TP604-609	1-535-877-22	■	CHIP, CHECKER
TP701-709	1-535-877-22	■	CHIP, CHECKER
TP761-767	1-535-877-22	o	CHIP, CHECKER
TP801-809	1-535-877-22	o	CHIP, CHECKER

(RP-89A BOARD(ESBK-7041(CE)))

Ref. No. or Q'ty	Part No.	SP	Description
TP861	1-535-877-22	■	CHIP, CHECKER
TP862	1-535-877-22	■	CHIP, CHECKER
TP863	1-535-877-22	o	CHIP, CHECKER
TP901-909	1-535-877-22	o	CHIP, CHECKER
TP961	1-535-877-22	o	CHIP, CHECKER
TP962	1-535-877-22	o	CHIP, CHECKER
TP963	1-535-877-22	o	CHIP, CHECKER
TP1001-1008	1-535-877-22	■	CHIP, CHECKER

SY-219 BOARD(ES-7(UC/J/CE))

Ref. No. or Q'ty	Part No.	SP	Description
1pc	A-8273-909-A	o	MOUNTED CIRCUIT BOARD, SY-219
1pc	8-759-289-81	s	IC M27C1024-80XF1
2pcs	3-172-089-01	■	HANDLE
3pcs	7-682-948-01	s	SCREW +PSW 3x8
6pcs	7-682-947-01	s	SCREW +PSW 3x6
4pcs	7-621-770-87	s	SCREW +B 2.6x5
C2	1-126-392-11	s	ELECT, CHIP 100uF 20% 6.3V
C7	1-163-037-11	s	CERAMIC, CHIP 0.022uF 10% 25V
C8	1-163-037-11	s	CERAMIC, CHIP 0.022uF 10% 25V
C9	1-126-392-11	■	ELECT, CHIP 100uF 20% 6.3V
C12	1-163-037-11	s	CERAMIC, CHIP 0.022uF 10% 25V
C13	1-163-037-11	s	CERAMIC, CHIP 0.022uF 10% 25V
C14	1-126-392-11	s	ELECT, CHIP 100uF 20% 6.3V
C15	1-163-037-11	s	CERAMIC, CHIP 0.022uF 10% 25V
C22-26	1-163-037-11	s	CERAMIC, CHIP 0.022uF 10% 25V
C28	1-163-251-11	s	CERAMIC, CHIP 100pF 5% 50V
C30	1-163-251-11	■	CERAMIC, CHIP 100pF 5% 50V
C31-38	1-163-037-11	s	CERAMIC, CHIP 0.022uF 10% 25V
C39	1-163-251-11	s	CERAMIC, CHIP 100pF 5% 50V
C40-46	1-163-037-11	s	CERAMIC, CHIP 0.022uF 10% 25V
C47	1-126-401-11	s	ELECT, CHIP 1uF 20% 50V
C48	1-126-401-11	s	ELECT, CHIP 1uF 20% 50V
C49	1-126-401-11	s	ELECT, CHIP 1uF 20% 50V
C50	1-126-401-11	■	ELECT, CHIP 1uF 20% 50V
C51	1-163-037-11	s	CERAMIC, CHIP 0.022uF 10% 25V
C52	1-163-037-11	s	CERAMIC, CHIP 0.022uF 10% 25V
C53	1-163-038-91	s	CERAMIC, CHIP 0.1uF 25V
C54	1-126-391-11	s	ELECT, CHIP 47uF 20% 6.3V
C55	1-126-401-11	s	ELECT, CHIP 1uF 20% 50V
C56-64	1-163-037-11	s	CERAMIC, CHIP 0.022uF 10% 25V
C66	1-163-037-11	s	CERAMIC, CHIP 0.022uF 10% 25V
C67	1-163-037-11	■	CERAMIC, CHIP 0.022uF 10% 25V
C68	1-163-037-11	■	CERAMIC, CHIP 0.022uF 10% 25V
C69	1-163-037-11	■	CERAMIC, CHIP 0.022uF 10% 25V
C71-77	1-163-037-11	s	CERAMIC, CHIP 0.022uF 10% 25V
C80	1-163-251-11	s	CERAMIC, CHIP 100pF 5% 50V
C81	1-163-251-11	■	CERAMIC, CHIP 100pF 5% 50V
C82	1-126-392-11	s	ELECT, CHIP 100uF 20% 6.3V
C83	1-163-037-11	s	CERAMIC, CHIP 0.022uF 10% 25V
C84	1-163-038-91	s	CERAMIC, CHIP 0.1uF 25V
C85	1-126-392-11	■	ELECT, CHIP 100uF 20% 6.3V
C86	1-126-392-11	s	ELECT, CHIP 100uF 20% 6.3V
C87	1-163-038-91	s	CERAMIC, CHIP 0.1uF 25V
C88	1-126-392-11	■	ELECT, CHIP 100uF 20% 6.3V
C100-107	1-126-398-11	s	ELECT, CHIP 4.7uF 20% 35V
C109	1-126-398-11	s	ELECT, CHIP 4.7uF 20% 35V
C110	1-126-398-11	s	ELECT, CHIP 4.7uF 20% 35V
C111	1-126-398-11	s	ELECT, CHIP 4.7uF 20% 35V
CN1	1-778-261-11	o	CONNECTOR, ■ 124P, MALE
CN2	1-778-261-11	o	CONNECTOR, BB 124P, MALE
CN3	1-573-566-11	s	CONNECTOR, D-SUB 9P, FEMALE
CN4	1-573-566-11	s	CONNECTOR, D-SUB 9P, FEMALE
CN5	1-573-566-11	s	CONNECTOR, D-SUB 9P, FEMALE
CN6	1-573-566-11	s	CONNECTOR, D-SUB 9P, FEMALE
CN7	1-573-566-11	s	CONNECTOR, D-SUB 9P, FEMALE
CN8	1-750-889-11	s	CONNECTOR, D-SUB 15P, FEMALE
CN10	1-568-426-11	s	CONNECTOR, D-SUB 9P, MALE
CN11	1-506-705-11	o	CONNECTOR, ILG 6P, MALE

(SY-219 BOARD(ES-7(UC/J/CE)))

Ref. No. or Q'ty	Part No.	SP	Description
CN111	1-526-662-21	o	SOCKET, IC (DP) 40P
CN156	1-526-659-00	o	SOCKET, IC 28P
D4	8-719-801-78	s	DIODE 1SS184
D6	8-719-104-34	s	DIODE 1S2835
D7	8-719-104-34	s	DIODE 1S2835
D8	8-719-801-78	s	DIODE 1SS184
FB1-43	1-412-363-21	■	CHOKE, NOISE, CHIP
FB100-111	1-543-309-21	s	BEAD, FERRITE
FB112	1-500-184-11	s	BEAD, FERRITE
FB113	1-500-184-11	s	BEAD, FERRITE
FL1-33	1-239-601-11	s	FILTER, NOISE CHIP
IC7	8-752-364-81	s	IC CXK581000AM-70LL
IC8	8-752-364-81	s	IC CXK581000AM-70LL
IC11	8-759-426-68	o	IC 27C1024-ES7-SY1V100
IC12	8-759-987-80	s	IC SN74LS245NS
IC13	8-759-933-65	s	IC SN74LS244NS
IC20	8-752-364-81	s	IC CXK581000AM-70LL
IC21	8-752-364-81	s	IC CXK581000AM-70LL
IC22	8-759-926-67	s	IC SN74HC374ANS
IC23	8-759-926-14	s	IC SN74HC148NS
IC24	8-759-933-65	s	IC SN74LS244NS
IC25	8-759-933-65	s	IC SN74LS244NS
IC26	8-759-926-12	s	IC SN74HC139ANS
IC27	8-759-926-12	s	IC SN74HC139ANS
IC28	8-759-925-85	s	IC SN74HC32ANS
IC29	8-759-239-23	s	IC TC74HC86AF
IC30	8-759-927-46	s	IC SN74HC00ANS
IC31	8-759-099-76	s	IC TMP68301AFR-16
IC32	8-759-065-85	s	IC MAX232N
IC33	8-759-245-99	s	IC TD62503F
IC34	8-759-973-71	s	IC TL7705CPS-B
IC35	8-759-925-76	s	IC SN74HC08ANS
IC36	8-759-925-85	s	IC SN74HC32ANS
IC37	8-759-926-11	s	IC SN74HC138ANS
IC38	8-759-987-80	■	IC SN74LS245NS
IC39	8-759-061-67	s	IC MC34051M
IC40	8-759-926-74	s	IC SN74HC393ANS
IC41	8-759-925-90	s	IC SN74HC74ANS
IC42	8-759-927-46	s	IC SN74HC00ANS
IC43	8-759-926-25	s	IC SN74HC165ANS
IC44	8-759-385-51	s	IC IDT71321SA55J-TL
IC45	8-759-933-65	s	IC SN74LS244NS
IC46	8-759-933-65	■	IC SN74LS244NS
IC47	8-759-923-65	s	IC AM26LS31CNS
IC48	8-759-175-78	s	IC Z8401510FEC
IC49	8-759-385-51	s	IC IDT71321SA55J-TL
IC50	8-759-933-65	■	IC SN74LS244NS
IC51	8-759-925-85	s	IC SN74HC32ANS
IC52	8-759-925-74	s	IC TC74HC04ANS
IC53	8-759-385-53	s	IC IDT71421SA55J-TL
IC54	8-759-923-64	s	IC AM26LS32ACNS
IC55	8-759-072-60	s	IC Z84C4306FEC
IC56	8-759-426-67	o	IC 27C512-ES7-SY2V100
IC57	8-759-926-74	s	IC SN74HC393ANS

(SY-219 BOARD(ES-7(UC/J/CE)))

Ref. No. or Q'ty	Part No.	SP	Description
L1	1-412-525-31	■	INDUCTOR 10uH
L2	1-412-525-31	s	INDUCTOR 10uH
PS1	⚠ 1-532-675-00	■	LINK, IC 1.5A
PS2	⚠ 1-532-675-00	s	LINK, IC 1.5A
R1	1-216-073-00	s	METAL, CHIP 10k 5% 1/10W
R3	1-216-073-00	s	METAL, CHIP 10k 5% 1/10W
R4	1-216-073-00	■	METAL, CHIP 10k 5% 1/10W
R6	1-216-073-00	s	METAL, CHIP 10k 5% 1/10W
R7	1-216-037-00	s	METAL, CHIP 330 5% 1/10W
R10	1-216-049-91	s	METAL, CHIP 1k 5% 1/10W
R11	1-216-073-00	s	METAL, CHIP 10k 5% 1/10W
R12	1-216-037-00	■	METAL, CHIP 330 5% 1/10W
R15	1-216-057-00	s	METAL, CHIP 2.2k 5% 1/10W
R16	1-216-037-00	s	METAL, CHIP 330 5% 1/10W
R17	1-216-037-00	s	METAL, CHIP 330 5% 1/10W
R18	1-216-037-00	s	METAL, CHIP 330 5% 1/10W
R20	1-216-049-91	■	METAL, CHIP 1k 5% 1/10W
R21	1-216-073-00	■	METAL, CHIP 10k 5% 1/10W
R22	1-216-073-00	■	METAL, CHIP 10k 5% 1/10W
RB1-6	1-236-908-11	s	RESISTOR BLOCK, CHIP 10kx4
RB7	1-239-426-11	s	RESISTOR BLOCK, CHIP 2.2kx4
RB9	1-236-908-11	s	RESISTOR BLOCK, CHIP 10kx4
RB10	1-236-908-11	■	RESISTOR BLOCK, CHIP 10kx4
RB11	1-236-908-11	s	RESISTOR BLOCK, CHIP 10kx4
RB12	1-239-426-11	■	RESISTOR BLOCK, CHIP 2.2kx4
RB13	1-236-908-11	s	RESISTOR BLOCK, CHIP 10kx4
RB15	1-239-416-11	s	RESISTOR BLOCK, CHIP 220x4
RB16-21	1-236-908-11	s	RESISTOR BLOCK, CHIP 10kx4
RB24	1-236-904-11	s	RESISTOR BLOCK, CHIP 1kx4
RB25-33	1-236-908-11	s	RESISTOR BLOCK, CHIP 10kx4
RB34	1-236-904-11	s	RESISTOR BLOCK, CHIP 1kx4
RB35	1-236-908-11	s	RESISTOR BLOCK, CHIP 10kx4
RB36	1-236-908-11	s	RESISTOR BLOCK, CHIP 10kx4
RB37	1-236-908-11	s	RESISTOR BLOCK, CHIP 10kx4
RB38	1-236-908-11	s	RESISTOR BLOCK, CHIP 10kx4
RB39	1-236-904-11	■	RESISTOR BLOCK, CHIP 1kx4
RB40	1-239-426-11	s	RESISTOR BLOCK, CHIP 2.2kx4
RB41-46	1-236-908-11	s	RESISTOR BLOCK, CHIP 10kx4
RB100	1-239-621-11	■	RESISTOR BLOCK, CHIP 22x4
RB101	1-239-621-11	s	RESISTOR BLOCK, CHIP 22x4
RB102	1-239-621-11	s	RESISTOR BLOCK, CHIP 22x4
RB103	1-239-621-11	s	RESISTOR BLOCK, CHIP 22x4
RB105	1-239-621-11	■	RESISTOR BLOCK, CHIP 22x4
RB106	1-239-621-11	s	RESISTOR BLOCK, CHIP 22x4
RB107	1-239-621-11	s	RESISTOR BLOCK, CHIP 22x4
RB108	1-239-621-11	s	RESISTOR BLOCK, CHIP 22x4
RB111	1-239-621-11	s	RESISTOR BLOCK, CHIP 22x4
RB112	1-239-621-11	s	RESISTOR BLOCK, CHIP 22x4
RY1	1-515-716-11	s	RELAY
RY2	1-515-716-11	s	RELAY
S1	1-692-535-11	s	SWITCH, DIP 4-CKT
S3	1-554-088-00	s	SWITCH, PUSH
X1	1-767-133-21	s	RESONATOR, CERAMIC 12.288MHz
X2	1-579-115-11	s	OSC, CRYSTAL 24.00MHz

VE-33/33A BOARD(ESBK-7024(UC/J/CE))

Ref. No. or Q'ty	Part No.	SP	Description
This mounted circuit board is not supplied for repair part.			
C1	1-128-401-11	s	ELECT 100uF 20% 25V
C2	1-163-038-91	s	CERAMIC, CHIP 0.1uF 25V
C3	1-128-401-11	s	ELECT 100uF 20% 25V
C4	1-163-038-91	■	CERAMIC, CHIP 0.1uF 25V
C5	1-126-396-11	s	ELECT, CHIP 47uF 20% 16V
C6	1-126-396-11	s	ELECT, CHIP 47uF 20% 16V
C7-12	1-135-085-21	s	TANTALUM, CHIP 4.7uF 10% 25V
C101-107	1-163-038-91	s	CERAMIC, CHIP 0.1uF 25V
C108-153	1-163-038-91	s	CERAMIC, CHIP 0.1uF 25V
C201-227	1-163-038-91	s	CERAMIC, CHIP 0.1uF 25V
C301-338	1-163-038-91	s	CERAMIC, CHIP 0.1uF 25V
C341-350	1-163-038-91	s	CERAMIC, CHIP 0.1uF 25V
C401-444	1-163-038-91	s	CERAMIC, CHIP 0.1uF 25V
CN60	1-766-364-11	■	CONNECTOR, BB 100P, HERMAPHRODITE
CN70	1-750-065-11	■	CONNECTOR, BB 60P, HERMAPHRODITE
CN80	1-766-364-11	■	CONNECTOR, BB 100P, HERMAPHRODITE
IC101	8-759-186-77	s	IC TC74VHC541F
IC102	8-759-099-38	■	IC SN74HCT374ANS-E05
IC103	8-759-099-38	s	IC SN74HCT374ANS-E05
IC104	8-759-099-38	s	IC SN74HCT374ANS-E05
IC105	8-759-240-94	s	IC TC74HCT174AF
IC106	8-759-927-12	s	IC SN74HCT244ANS
IC107	8-759-927-12	■	IC SN74HCT244ANS
IC108	8-759-186-38	s	IC TC74VHC32F
IC109	8-759-186-47	s	IC TC74VHC138F
IC110	8-759-186-47	s	IC TC74VHC138F
IC111	8-759-186-47	s	IC TC74VHC138F
IC112	8-759-186-47	■	IC TC74VHC138F
IC113	8-759-186-49	s	IC TC74VHC139F
IC114	8-759-186-49	s	IC TC74VHC139F
IC115	8-759-081-42	s	IC TC74VHC00F
IC116	8-759-186-49	s	IC TC74VHC139F
IC117	8-759-926-82	s	IC SN74HC574ANS
IC118	8-759-926-82	s	IC SN74HC574ANS
IC119	8-759-926-82	s	IC SN74HC574ANS
IC120	8-759-081-44	s	IC TC74VHC04F
IC121	8-759-926-28	s	IC SN74HC174ANS
IC122	8-759-185-84	s	IC TC74VHC161F(EL)
IC123	8-759-185-84	s	IC TC74VHC161F(EL)
IC124	8-759-185-84	s	IC TC74VHC161F(EL)
IC125	8-759-185-84	s	IC TC74VHC161F(EL)
IC126	8-759-185-64	■	IC TC74VHC10F(EL)
IC127	8-759-186-51	s	IC TC74VHC157F
IC128	8-759-186-51	s	IC TC74VHC157F
IC129	8-759-186-51	s	IC TC74VHC157F
IC130	8-759-186-51	■	IC TC74VHC157F
IC131	8-759-186-51	s	IC TC74VHC157F
IC132	8-759-063-42	s	IC CXD8264Q
IC133	8-759-186-77	s	IC TC74VHC541F
IC134	8-759-186-77	s	IC TC74VHC541F
IC135	8-759-258-96	s	IC CY7C128A-25VCTEL
IC136	8-759-258-96	s	IC CY7C128A-25VCTEL
IC137	8-759-425-52	o	IC 27C4096ACC-ES7A-VE137V1.00
IC138	8-759-294-71	s	IC CXD8936Q
IC139	8-759-425-53	o	IC 27C4096ACC-ES7A-VE139V1.00
IC140	8-759-294-71	s	IC CXD8936Q

(VE-33/33A BOARD(ESBK-7024(UC/J/CE)))

Ref. No. or Q'ty	Part No.	SP	Description
IC141	8-759-063-40	s	IC CXD8266Q
IC142	8-759-063-40	s	IC CXD8266Q
IC143	8-759-254-78	s	IC CY7C185-25VCTEL
IC144	8-759-254-78	s	IC CY7C185-25VCTEL
IC145	8-759-254-78	s	IC CY7C185-25VCTEL
IC146	8-759-254-78	s	IC CY7C185-25VCTEL
IC147	8-759-254-78	s	IC CY7C185-25VCTEL
IC148	8-759-254-78	s	IC CY7C185-25VCTEL
IC149	8-759-254-78	s	IC CY7C185-25VCTEL
IC150	8-759-254-78	s	IC CY7C185-25VCTEL
IC151	8-759-063-39	s	IC CXD8267Q
IC152	8-759-063-39	■	IC CXD8267Q
IC153	8-759-385-55	s	IC CXD8558Q
IC201	8-759-186-51	s	IC TC74VHC157F
IC202	8-759-186-51	s	IC TC74VHC157F
IC203	8-759-186-51	s	IC TC74VHC157F
IC204	8-759-186-51	s	IC TC74VHC157F
IC205	8-759-180-00	s	IC CXD8839Q
IC206	8-759-180-00	s	IC CXD8839Q
IC207	8-759-180-00	s	IC CXD8839Q
IC208	8-759-180-00	s	IC CXD8839Q
IC209	8-759-180-00	s	IC CXD8839Q
IC210	8-759-180-00	s	IC CXD8839Q
IC211	8-759-081-48	s	IC TC74VHC08F
IC212	8-759-425-48	o	IC 7032LC44-ES7A-VE212V1.00
IC213	8-759-063-39	s	IC CXD8267Q
IC214	8-759-063-39	s	IC CXD8267Q
IC215	8-759-063-39	s	IC CXD8267Q
IC216	8-759-063-39	s	IC CXD8267Q
IC217	8-759-926-82	s	IC SN74HC574ANS
IC218	8-759-186-51	s	IC TC74VHC157F
IC219	8-759-186-51	s	IC TC74VHC157F
IC220	8-759-186-51	s	IC TC74VHC157F
IC221	8-759-186-51	s	IC TC74VHC157F
IC222	8-759-926-28	s	IC SN74HC174ANS
IC223	8-759-926-28	s	IC SN74HC174ANS
IC224	8-759-186-51	s	IC TC74VHC157F
IC225	8-759-186-51	s	IC TC74VHC157F
IC226	8-759-186-51	s	IC TC74VHC157F
IC227	8-759-385-55	s	IC CXD8558Q
IC301	8-759-049-12	s	IC SN74ALS540NS
IC302	8-759-049-12	s	IC SN74ALS540NS
IC303	8-759-926-82	s	IC SN74HC574ANS
IC304	8-759-926-82	s	IC SN74HC574ANS
IC305	8-759-926-82	s	IC SN74HC574ANS
IC306	8-759-926-82	s	IC SN74HC574ANS
IC307	8-759-926-82	s	IC SN74HC574ANS
IC308	8-759-926-82	s	IC SN74HC574ANS
IC309	8-759-926-82	s	IC SN74HC574ANS
IC310	8-759-926-82	■	IC SN74HC574ANS
IC311	8-759-926-82	s	IC SN74HC574ANS
IC312	8-759-926-82	s	IC SN74HC574ANS
IC313	8-759-926-29	s	IC SN74HC175ANS
IC314	8-759-926-29	■	IC SN74HC175ANS
IC315	8-759-294-71	s	IC CXD8936Q
IC316	8-759-425-43	o	IC 27H010-ES7A-VE316V1.00
IC317	8-759-425-54	o	IC 27H010-ES7A-VE317V1.00
IC318	8-759-425-49	■	IC 7032LC44-ES7A-VE318V1.00
IC319	8-759-926-82	s	IC SN74HC574ANS

(VE-33/33A BOARD(ESBK-7024(UC/J/CE)))

Ref. No. or Q'ty	Part No.	SP	Description
IC320	8-759-926-82	s	IC SN74HC574ANS
IC321	8-759-926-82	s	IC SN74HC574ANS
IC322	8-759-186-29	s	IC TC74VHC11F
IC323	8-759-186-29	s	IC TC74VHC11F
IC324	8-759-185-64	s	IC TC74VHC10F(EL)
IC325	8-759-081-42	s	IC TC74VHC00F
IC326	8-759-926-28	s	IC SN74HC174ANS
IC327	8-759-926-82	s	IC SN74HC574ANS
IC328	8-759-926-82	s	IC SN74HC574ANS
IC329	8-759-926-82	s	IC SN74HC574ANS
IC330	8-759-926-82	s	IC SN74HC574ANS
IC331	8-759-926-82	s	IC SN74HC574ANS
IC332	8-759-425-55	o	IC 27H010-ES7A-VE332V1.00
IC333	8-759-425-56	o	IC 27H010-ES7A-VE333V1.00
IC334	8-759-926-82	s	IC SN74HC574ANS
IC335	8-759-926-82	s	IC SN74HC574ANS
IC336	8-759-425-57	o	IC 27H010-ES7A-VE336V1.00
IC337	8-759-425-58	o	IC 27H010-ES7AN-VE337V1.00(for UC/J)
IC337	8-759-425-61	o	IC 27H010-ES7AP-VE337V2.00(for CE)
IC338	8-759-425-59	o	IC 27H010-ES7AN-VE338V1.00(for UC/J)
IC338	8-759-425-62	o	IC 27H010-ES7AP-VE338V2.00(for CE)
IC341	8-759-926-82	s	IC SN74HC574ANS
IC342	8-759-926-82	s	IC SN74HC574ANS
IC343	8-759-385-57	s	IC CXD8560Q
IC344	8-759-926-82	s	IC SN74HC574ANS
IC345	8-759-926-82	■	IC SN74HC574ANS
IC346	8-759-926-82	s	IC SN74HC574ANS
IC347	8-759-926-82	s	IC SN74HC574ANS
IC348	8-759-425-60	o	IC 27H010-ES7A-VE348V1.00
IC349	8-759-926-82	s	IC SN74HC574ANS
IC350	8-759-385-57	s	IC CXD8560Q
IC401	8-759-294-69	s	IC CXD8879Q
IC402	8-759-186-54	s	IC TC74VHC164F
IC403	8-759-186-54	s	IC TC74VHC164F
IC404	8-759-186-54	s	IC TC74VHC164F
IC405	8-759-186-54	s	IC TC74VHC164F
IC406	8-759-425-50	o	IC 7032LC44-ES7A-VE406V1.00
IC407	8-759-425-51	■	IC 7032LC44-ES7A-VE407V1.00
IC408	8-759-425-70	■	IC 27H010-ES7A-VE408V1.00
IC409	8-759-425-71	o	IC 27H010-ES7A-VE409V1.00
IC410	8-759-425-72	o	IC 27H010-ES7A-VE410V1.00
IC411	8-759-425-73	o	IC 27H010-ES7A-VE411V1.00
IC412	8-759-926-82	s	IC SN74HC574ANS
IC413	8-759-186-51	s	IC TC74VHC157F
IC414	8-759-186-51	s	IC TC74VHC157F
IC415	8-759-425-74	o	IC 27H010-ES7A-VE415V1.00
IC416	8-759-425-44	o	IC 27H010-ES7A-VE416V1.00
IC417	8-759-425-45	o	IC 27H010-ES7A-VE417V1.00
IC418	8-759-186-51	s	IC TC74VHC157F
IC419	8-759-186-51	s	IC TC74VHC157F
IC420	8-759-926-82	s	IC SN74HC574ANS
IC421	8-759-926-82	s	IC SN74HC574ANS
IC422	8-759-063-37	s	IC WS59510-40J
IC423	8-759-385-57	s	IC CXD8560Q
IC424	8-759-926-82	s	IC SN74HC574ANS
IC425	8-759-927-23	s	IC SN74HCT574NS
IC426	8-759-931-56	s	IC SN74LS684NS
IC427	8-759-049-11	s	IC SN74ALS157ANS
IC428	8-759-049-11	s	IC SN74ALS157ANS

(VE-33/33A BOARD(ESBK-7024(UC/J/CE)))

Ref. No. or Q'ty	Part No.	SP	Description
IC429	8-759-927-23	s	IC SN74HCT574NS
IC430	8-759-931-56	s	IC SN74LS684NS
IC431	8-759-049-11	s	IC SN74ALS157ANS
IC432	8-759-049-11	s	IC SN74ALS157ANS
IC433	8-759-425-46	o	IC 27H010-ES7A-VE433V1.00
IC434	8-759-385-55	s	IC CXD8558Q
IC435	8-759-179-94	s	IC HM530281-20
IC436	8-759-425-47	o	IC 27H010-ES7A-VE436V1.00
IC437	8-759-186-51	s	IC TC74VHC157F
IC438	8-759-186-51	s	IC TC74VHC157F
IC439	8-759-385-57	s	IC CXD8560Q
IC440	8-759-385-55	s	IC CXD8558Q
IC441	8-759-179-94	s	IC HM530281-20
IC442	8-759-179-94	s	IC HM530281-20
IC443	8-759-926-82	s	IC SN74HC574ANS
IC444	8-759-926-82	s	IC SN74HC574ANS
L1-107	1-500-202-11	s	BEAD, FERRITE
PS1	⚠ 1-533-282-21	s	LINK, IC 2A
RB101-106	1-239-309-11	s	RESISTOR BLOCK, CHIP 100kx8
RB301	1-239-309-11	s	RESISTOR BLOCK, CHIP 100kx8
RB302	1-239-309-11	s	RESISTOR BLOCK, CHIP 100kx8
RB303	1-239-309-11	s	RESISTOR BLOCK, CHIP 100kx8
RB304	1-239-428-11	s	RESISTOR BLOCK, CHIP 3.3kx4
RB305	1-239-428-11	s	RESISTOR BLOCK, CHIP 3.3kx4
RB306	1-239-428-11	s	RESISTOR BLOCK, CHIP 3.3kx4
RB307	1-239-621-11	s	RESISTOR BLOCK, CHIP 22x4
RB308	1-239-621-11	s	RESISTOR BLOCK, CHIP 22x4
RB309	1-239-621-11	s	RESISTOR BLOCK, CHIP 22x4

VPR-18 BOARD(ES-7(UC/J/CE))

Ref. No. or Q'ty	Part No.	SP	Description
1pc	A-8273-914-A	o	MOUNTED CIRCUIT BOARD, VPR-18
2pcs	7-685-871-01	s	SCREW +BVTT 3x6 (S)
2pcs	7-682-546-04	s	SCREW +B 3x5
2pcs	3-718-661-01	o	SUPPORT, TC
C1	1-164-346-11	s	CERAMIC, CHIP 1uF 16V
C2	1-126-394-11	s	ELECT, CHIP 10uF 20% 16V
C3	1-163-038-91	■	CERAMIC, CHIP 0.1uF 25V
C4	1-126-396-11	s	ELECT, CHIP 47uF 20% 16V
C5	1-163-038-91	s	CERAMIC, CHIP 0.1uF 25V
C6	1-164-346-11	s	CERAMIC, CHIP 1uF 16V
C7	1-163-038-91	■	CERAMIC, CHIP 0.1uF 25V
C8	1-126-394-11	s	ELECT, CHIP 10uF 20% 16V
C9	1-126-926-11	s	ELECT 1000uF 20% 10V
C10	1-163-038-91	s	CERAMIC, CHIP 0.1uF 25V
C11	1-164-232-11	■	CERAMIC, CHIP 0.01uF 10% 100V
C12	1-126-394-11	s	ELECT, CHIP 10uF 20% 16V
C13	1-163-038-91	■	CERAMIC, CHIP 0.1uF 25V
C14	1-163-038-91	s	CERAMIC, CHIP 0.1uF 25V
C15	1-163-038-91	s	CERAMIC, CHIP 0.1uF 25V
C16	1-163-038-91	■	CERAMIC, CHIP 0.1uF 25V
C17	1-164-232-11	■	CERAMIC, CHIP 0.01uF 10% 100V
C18	1-164-232-11	s	CERAMIC, CHIP 0.01uF 10% 100V
C19	1-164-232-11	s	CERAMIC, CHIP 0.01uF 10% 100V
C20	1-164-232-11	s	CERAMIC, CHIP 0.01uF 10% 100V
C21	1-126-396-11	s	ELECT, CHIP 47uF 20% 16V
C22	1-163-038-91	s	CERAMIC, CHIP 0.1uF 25V
C23	1-163-038-91	s	CERAMIC, CHIP 0.1uF 25V
C24	1-164-232-11	s	CERAMIC, CHIP 0.01uF 10% 100V
C25	1-163-038-91	s	CERAMIC, CHIP 0.1uF 25V
C26	1-163-038-91	s	CERAMIC, CHIP 0.1uF 25V
C27	1-164-232-11	s	CERAMIC, CHIP 0.01uF 10% 100V
C28-33	1-163-038-91	s	CERAMIC, CHIP 0.1uF 25V
C34	1-126-396-11	■	ELECT, CHIP 47uF 20% 16V
C35	1-126-394-11	s	ELECT, CHIP 10uF 20% 16V
C36-43	1-163-038-91	s	CERAMIC, CHIP 0.1uF 25V
C44	1-126-394-11	s	ELECT, CHIP 10uF 20% 16V
C45	1-164-346-11	■	CERAMIC, CHIP 1uF 16V
C46	1-164-346-11	s	CERAMIC, CHIP 1uF 16V
C47-51	1-164-232-11	s	CERAMIC, CHIP 0.01uF 10% 100V
C52	1-164-346-11	s	CERAMIC, CHIP 1uF 16V
C53	1-164-346-11	s	CERAMIC, CHIP 1uF 16V
C54	1-126-394-11	s	ELECT, CHIP 10uF 20% 16V
C55	1-164-232-11	s	CERAMIC, CHIP 0.01uF 10% 100V
C56	1-164-232-11	s	CERAMIC, CHIP 0.01uF 10% 100V
C57	1-164-346-11	s	CERAMIC, CHIP 1uF 16V
C58	1-164-346-11	s	CERAMIC, CHIP 1uF 16V
C59	1-126-394-11	s	ELECT, CHIP 10uF 20% 16V
C60	1-163-038-91	s	CERAMIC, CHIP 0.1uF 25V
C73	1-163-038-91	s	CERAMIC, CHIP 0.1uF 25V
C74	1-163-038-91	s	CERAMIC, CHIP 0.1uF 25V
C75	1-164-346-11	s	CERAMIC, CHIP 1uF 16V
CN2	1-766-364-11	s	CONNECTOR, BB 100P, HERMAPHRODITE
CN3	1-766-364-11	s	CONNECTOR, BB 100P, HERMAPHRODITE
CN4	1-566-343-11	o	CONNECTOR, 40P, MALE
CN5	1-566-312-11	s	CONNECTOR, 50P, MALE
DL1	8-759-297-58	s	IC DS1000Z-50
FB1	1-239-626-11	s	EMIFIL ARRAY, CHIP

(VPR-18 BOARD(ES-7(UC/J/CE)))

Ref. No. or Q'ty	Part No.	SP	Description
FB2	1-239-626-11	s	EMIFIL ARRAY, CHIP
FB3	1-239-626-11	s	EMIFIL ARRAY, CHIP
FB4	1-239-642-21	s	EMIFIL ARRAY, CHIP
FB5	1-239-642-21	s	EMIFIL ARRAY, CHIP
FB6	1-239-642-21	s	EMIFIL ARRAY, CHIP
IC1	8-759-359-54	s	IC SN74ALS244CNS-E20
IC2	8-759-386-35	s	IC SN74ABT16374ADL
IC3	8-759-396-68	s	IC CXD8596Q
IC4	8-759-396-67	s	IC CXD8597Q
IC5	8-759-515-12	■	IC SN74ALS574BNS
IC6	8-759-515-12	s	IC SN74ALS574BNS
IC7	8-759-515-12	s	IC SN74ALS574BNS
IC8	8-759-296-24	s	IC CY7C199-20VC
IC9	8-759-296-24	s	IC CY7C199-20VC
IC10	8-759-296-24	■	IC CY7C199-20VC
IC11	8-759-296-24	s	IC CY7C199-20VC
IC14	8-759-298-24	s	IC SN74ALS240ANS-E20
L1	1-500-202-11	■	BEAD, FERRITE
L2	1-402-798-11	■	COIL, CHOKE 22uH
L3	1-500-202-11	s	BEAD, FERRITE
L4	1-500-202-11	s	BEAD, FERRITE
L5	1-500-202-11	s	BEAD, FERRITE
L6	1-500-202-11	s	BEAD, FERRITE
L9	1-500-202-11	■	BEAD, FERRITE
L10	1-500-202-11	s	BEAD, FERRITE
R1	1-216-073-00	s	METAL, CHIP 10k 5% 1/10W
R2	1-216-073-00	s	METAL, CHIP 10k 5% 1/10W
R3-7	1-216-298-00	s	METAL 2.2 5% 1/10W
R35	1-216-009-00	s	METAL, CHIP 22 ■ 1/10W
R36	1-216-043-91	s	METAL, CHIP 560 5% 1/10W
R37	1-216-041-00	s	METAL, CHIP 470 5% 1/10W
R38	1-216-043-91	s	METAL, CHIP 560 5% 1/10W
R39	1-216-041-00	s	METAL, CHIP 470 5% 1/10W
R40	1-216-043-91	s	METAL, CHIP 560 5% 1/10W
R41	1-216-041-00	s	METAL, CHIP 470 5% 1/10W
R42	1-216-043-91	s	METAL, CHIP 560 5% 1/10W
R43	1-216-041-00	s	METAL, CHIP 470 5% 1/10W
R44	1-216-073-00	s	METAL, CHIP 10k 5% 1/10W
R45	1-216-073-00	s	METAL, CHIP 10k 5% 1/10W
R46-50	1-216-009-00	s	METAL, CHIP 22 5% 1/10W
R58	1-216-073-00	s	METAL, CHIP 10k 5% 1/10W
R59	1-216-073-00	■	METAL, CHIP 10k 5% 1/10W
R60	1-216-073-00	s	METAL, CHIP 10k 5% 1/10W
R61	1-216-073-00	s	METAL, CHIP 10k 5% 1/10W
R62	1-216-009-00	s	METAL, CHIP 22 5% 1/10W
R63	1-216-009-00	s	METAL, CHIP 22 5% 1/10W
R64	1-216-009-00	s	METAL, CHIP 22 ■ 1/10W
R65	1-216-009-00	s	METAL, CHIP 22 5% 1/10W
R67	1-216-009-00	s	METAL, CHIP 22 5% 1/10W
R68	1-216-009-00	s	METAL, CHIP 22 5% 1/10W
R69	1-216-009-00	s	METAL, CHIP 22 5% 1/10W
R71-77	1-216-009-00	s	METAL, CHIP 22 5% 1/10W
R78	1-216-073-00	s	METAL, CHIP 10k 5% 1/10W
R79	1-216-073-00	s	METAL, CHIP 10k 5% 1/10W
R80	1-216-043-91	■	METAL, CHIP 560 5% 1/10W
R81	1-216-043-91	s	METAL, CHIP 560 5% 1/10W
R83	1-216-009-00	s	METAL, CHIP 22 ■ 1/10W
R84	1-216-009-00	s	METAL, CHIP 22 5% 1/10W

(VPR-18 BOARD(ES-7(UC/J/CE)))

Ref. No. or Q'ty	Part No.	SP	Description
R85	1-216-073-00	s	METAL, CHIP 10k 5% 1/10W
R107	1-216-073-00	s	METAL, CHIP 10k 5% 1/10W
R132	1-216-073-00	s	METAL, CHIP 10k 5% 1/10W
R135	1-216-041-00	s	METAL, CHIP 470 5% 1/10W
R136	1-216-043-91	s	METAL, CHIP 560 5% 1/10W
R137	1-216-009-00	s	METAL, CHIP 22 ■ 1/10W
R138	1-216-009-00	s	METAL, CHIP 22 5% 1/10W
R139-143	1-216-073-00	s	METAL, CHIP 10k ■ 1/10W
R144	1-216-009-00	s	METAL, CHIP 22 5% 1/10W
R145	1-216-009-00	s	METAL, CHIP 22 5% 1/10W
R146	1-216-009-00	■	METAL, CHIP 22 5% 1/10W
R147	1-216-009-00	■	METAL, CHIP 22 5% 1/10W
R151	1-216-009-00	■	METAL, CHIP 22 5% 1/10W
R152	1-216-298-00	s	METAL 2.2 ■ 1/10W
R153	1-216-009-00	s	METAL, CHIP 22 ■ 1/10W
R156	1-216-043-91	s	METAL, CHIP 560 5% 1/10W
R157	1-216-043-91	s	METAL, CHIP 560 5% 1/10W
R192	1-216-073-00	s	METAL, CHIP 10k 5% 1/10W
R193	1-216-009-00	s	METAL, CHIP 22 5% 1/10W
R195	1-216-073-00	■	METAL, CHIP 10k 5% 1/10W
R196	1-216-073-00	s	METAL, CHIP 10k 5% 1/10W
R197-202	1-216-009-00	s	METAL, CHIP 22 5% 1/10W
RB1-6	1-239-621-11	s	RESISTOR BLOCK, CHIP 22x4
RB21-26	1-236-908-11	s	RESISTOR BLOCK, CHIP 10kx4
TP8	1-535-757-11	s	TERMINAL, TP
TP9	1-535-757-11	s	TERMINAL, TP
TP10	1-535-757-11	s	TERMINAL, TP
TP12-16	1-535-757-11	■	TERMINAL, TP

FRAME(ES-7)

Ref. No. or Q'ty	Part No.	SP	Description
1pc	1-504-289-11	■	SPEAKER (5cm)
1pc	⚠ 1-570-384-11	s	SWITCH, ROCKER (AC POWER)
1pc	1-589-861-11	o	BOARD, PC MAIN(P/I-P55TP4XE)
1pc	1-589-888-11	■	BOARD, VGA
4pcs	1-698-779-11	s	FAN, DC
1pc	1-698-827-11	s	FAN, DC (WITH HEAT SINK)
1pc	1-759-216-12	s	DRIVE, HARD DISK (3.5" 1GB)
2pcs	1-777-295-11	o	CABLE, FLAT 40P, 0.45m (CD-ROM drive to SECONDARY/PC Main board) (Hard disk drive to PRIMARY/PC Main board)
1pc	1-777-298-11	o	CABLE, FLAT 34P, 0.32m (Floppy disk drive to FLOPPY/PC Main board
1pc	1-777-296-11	o	CABLE, FLAT 25P, 0.2m (PRINTER connector/Rear panel to PRINTER/ PC Main board)
2pcs	1-777-297-11	o	CABLE, FLAT 9P, 0.15m (COM1 connector/Rear panel to COM1/PC Main board) (COM2 connector/Rear panel to COM2/PC Main board)
1pc	8-749-012-23	s	IC S16265NHC
1pc	8-759-379-37	s	IC A80502-66100
CB1	⚠ 1-533-630-11	s	BREAKER, CIRCUIT 5A(for CE)
CB1	⚠ 1-533-570-11	■	BREAKER, CIRCUIT 8A(for UC/J)

HARNESS, SUB(5V PWR):
(CN4/RE-122 board to CN4/MB-639 board)
(CN14/RE-122 board to CN14/MB-639 board)

(to CN4 and CN14/MB-639 board)			
CN4/14	1-563-888-11	o	HOUSING, VH 10P
10pcs	1-562-210-11	o	CONTACT, FEMALE AWG18-22
(to CN4 and CN14/RE-122 board)			
CN4/14	1-563-888-11	o	HOUSING, VH 10P
10pcs	1-562-210-11	o	CONTACT, FEMALE AWG18-22

HARNESS, SUB(AC IN)
(CN21/RE-122 board to AC IN)

(to AC IN)			
1pc	⚠ 1-251-506-11	s	FILTER, NOISE(for UC/J)
1pc	⚠ 1-251-507-11	s	FILTER, NOISE(for CE)
(to CN21/RE-122 board)			
CN21	1-561-828-00	■	HOUSING, 3P
2pcs	1-561-067-00	■	CONTACT, FEMALE AWG14-20

HARNESS, SUB(AU-01):
(CN800/AU-217 board to CN800/CN-1237 board)
(CN801/AU-217 board to CN801/CN-1237 board)
(CN803/AU-217 board to CN803/CN-1237 board)
(CN804/AU-217 board to CN803/CN-1237 board)

4pcs	1-956-152-11	o	HARNESS, SUB (AU-01)

HARNESS, SUB(AU-02):
(CN802/AU-217 board to CN802/CN-1237 board)

1pc	1-956-153-11	o	HARNESS, SUB (AU-02)

HARNESS, SUB(AU-03):
(CN805/AU-217 board to CN805/CN-1238 board)

1pc	1-956-154-11	■	HARNESS, SUB (AU-03)

HARNESS, SUB(BF):
(CN1/BF-54 board to CN3/MB-639 board)

1pc	1-956-150-11	■	HARNESS, SUB (BF)

(FRAME(ES-7))

Ref. No. or Q'ty	Part No.	SP	Description

HARNESS, SUB (CD-ROM PWR):
(CN33/RE-122 board to CD-ROM Drive)

(to CN33/RE-122 board)			
CN33	1-562-285-11	o	HOUSING, 4P
4pcs	1-562-210-11	o	CONTACT, FEMALE AWG18-22
(to CD-ROM Drive)			
	1-508-424-11	o	HOUSING 4P, PLUG
4pcs	1-535-714-11	o	CONTACT, FEMALE

HARNESS, SUB(DC PWR1)
(CN5/RE-122 board to CN5/MB-639 board)

(to CN5/RE-122 board)			
CN5	1-562-640-11	o	HOUSING, CONNECTOR 8P
8pcs	1-562-210-11	o	CONTACT, FEMALE AWG18-22
(to CN5/MB-639 board)			
CN5	1-562-640-11	o	HOUSING, CONNECTOR 8P
8pcs	1-562-210-11	o	CONTACT, FEMALE AWG18-22

HARNESS, SUB(DC PWR2)
(CN6/RE-122 board to CN6/MB-639 board)

(to CN6/RE-122 board)			
CN6	1-561-520-00	o	HOUSING, 10P
10pcs	1-560-372-00	o	CONTACT, ILG, FEMALE
(to CN6/MB-639 board)			
CN6	1-561-520-00	o	HOUSING, 10P
10pcs	1-560-372-00	■	CONTACT, ILG, FEMALE

HARNESS, SUB (FDD PWR):
(CN35/RE-122 board to Floppy Disk Drive)

(to CN35/RE-122 board)			
CN35	1-562-211-11	■	HOUSING, 3P
3pcs	1-562-210-11	o	CONTACT, FEMALE AWG18-22
(to Floppy Disk Drive)			
	1-561-664-00	o	CONNECTOR 4P, FEMALE
3pcs	1-560-006-00	o	CONTACT, EI, FEMALE AWG20-26

HARNESS, SUB(FP):
(CN7/FP-74 board to CN7/MB-639 board)

1pc	1-956-151-11	o	HARNESS, SUB (FP)

HARNESS, SUB (HDD PWR):
(CN34/RE-122 board to Hard Disk Drive)

(to CN34/RE-122 board)			
CN34	1-562-285-11	o	HOUSING, 4P
4pcs	1-562-210-11	o	CONTACT, FEMALE AWG18-22
(to Hard Disk Drive)			
	1-508-424-11	o	HOUSING 4P, PLUG
4pcs	1-535-714-11	o	CONTACT, FEMALE

HARNESS, SUB (REF OUT):
(CN8/CN-1242 board to CN8/MB-639 board)

(to CN8/CN-1242 board)			
CN8	1-561-519-00	■	HOUSING, 8P
8pcs	1-560-372-00	o	CONTACT, ILG, FEMALE
(to CN8/MB-639 board)			
CN8	1-561-519-00	o	HOUSING, 8P
8pcs	1-560-372-00	o	CONTACT, ILG, FEMALE

(FRAME(ES-7))

Ref. No. or Q'ty	Part No.	SP	Description
HARNESS, SUB(PC PWR): (CN31 and pin-1 of CN32/RE-122 board and to CPU P1/PC Main board) (Pin-2 thru 7 of CN32/RE-122 board to CPU P2/PC Main board)			
(to CN31/RE-122 board)			
CN31	1-562-286-11	■	HOUSING, 5P
5pcs	1-562-210-11	s	CONTACT, FEMALE AWG18-22
(to CN32/RE-122 board)			
CN32	1-562-833-11	o	HOUSING, 7P
7pcs	1-562-210-11	s	CONTACT, FEMALE AWG18-22
(to CPU P1/PC Main board)			
CPU P1	1-778-620-11	o	HOUSING, 6P
6pcs	1-778-621-11	o	CONTACT, FEMALE AWG18-24
(to CPU P2/PC Main board)			
CPU P2	1-778-620-21	o	HOUSING, 6P
6pcs	1-778-621-11	■	CONTACT, FEMALE AWG18-24
HARNESS, SUB(PWR SW): (CN22/RE-122 board to POWER ON switch)			
(to CN22/RE-122 board			
CN22	1-561-863-00	■	HOUSING, MATE-N 5P, PLUG
4pcs	1-561-067-00	■	CONTACT, FEMALE AWG14-20
HARNESS, SUB(VPR1): (CN5/VPR-18 board to CN1/MB-639 board)			
1pc	1-956-148-11	o	HARNESS, SUB (VPR1)
HARNESS, SUB(VPR2): (CN4/VPR-18 board to CN2/MB-639 board)			
1pc	1-956-149-11	o	HARNESS, SUB (VPR2)

5-4. PACKING MATERIAL & SUPPLIED ACCESSORIES

ES-7(UC/J/CE)

Ref. No. or Q'ty		Part No.	SP	Description
1pc	⚠	1-551-812-11	s	CORD, POWER 3P(for UC)
1pc	⚠	1-557-161-11	■	CORD, POWER 2P(for J)
1pc		1-563-375-11	■	SHELL, D-SUB 9P
1pc		1-568-182-11	o	CONNECTOR, D-SUB 9P, MALE
1pc	⚠	1-590-910-11	s	CORD, AC POWER 3P(for CE)
1pc		1-759-259-11	o	MOUSE
1pc		1-759-260-21	o	KEYBOARD ASSY (101)
1pc		1-777-294-11	s	CORD, CONNECTION
1pc		3-603-504-01	o	PACKAGE,OS (E)(for UC/CE)
1pc		2-603-505-01	o	PACKAGE,OS (J)(for J)
1pc		3-704-318-01	o	BAG, PROTECTION
1pc		3-856-429-01	s	MANUAL, INSTRUCTION (JAPANESE, FOR J)
1pc	⚠	3-856-429-11	s	MANUAL, INSTRUCTION (ENGLISH, FOR UC/CE)
1pc		3-856-429-21	s	MANUAL, INSTRUCTION (FRENCH, FOR UC/CE)
1pc		3-856-429-31	s	MANUAL, INSTRUCTION (GERMAN, FOR CE)
1pc		1-759-311-11	o	CD-ROM

ESBK-7021(UC/J/CE)

Ref. No. or Q'ty	Part No.	SP	Description
1pc	3-856-431-01	s	MANUAL, INSTRUCTION

ESBK-7022(UC/J/CE)

Ref. No. or Q'ty	Part No.	SP	Description
1pc	3-704-046-31	■	BAG,PREVENTION,ELECTRIFICATION
1pc	3-856-431-01	s	MANUAL, INSTRUCTION
6pcs	7-682-545-04	s	SCREW +B 3x4

ESBK-7023(UC/J/CE)

Ref. No. or Q'ty	Part No.	SP	Description
1pc	3-856-431-01	s	MANUAL, INSTRUCTION

ESBK-7024(UC/J/CE)

Ref. No. or Q'ty	Part No.	SP	Description
1pc	3-856-431-01	s	MANUAL, INSTRUCTION
9pcs	7-682-545-04	s	SCREW +B 3x4

ESBK-7031(UC/J/CE)

Ref. No. or Q'ty	Part No.	SP	Description
1pc	3-856-431-01	s	MANUAL, INSTRUCTION

ESBK-7032(UC/J/CE)

Ref. No. or Q'ty	Part No.	SP	Description
1pc	3-856-431-01	s	MANUAL, INSTRUCTION
5pcs	1-765-112-12	■	CABLE ASSY, COAXIAL
8pcs	7-682-547-04	s	SCREW +B 3x6

ESBK-7041(UC/J/CE)

Ref. No. or Q'ty	Part No.	SP	Description
1pc	3-856-431-01	s	MANUAL, INSTRUCTION

ESBK-7071(UC/J/CE)

Ref. No. or Q'ty	Part No.	SP	Description
1pc	1-759-312-11	■	CD-ROM
1pc	3-704-046-91	s	BAG, PREVENTION, ELECTRIFICATION
5pcs	7-682-947-01	s	SCREW +PSW 3x6

5-5. OPTIONAL FIXTURES

Part No.	SP	Description
J-6381-380-A	■	CABLE, VIDEO(S-BNC)
J-6441-950-A	o	EXTENSION BOARD, EX-488

SONY

エディットステーション

EDITSTATION

ES-7

BASIC DME SWITCHER BOARD
ESBK-7021

3D EFFECT BOARD FOR BASIC DME SWITCHER
ESBK-7022

ADVANCED DME SWITCHER BOARD
ESBK-7023

3D EFFECT BOARD FOR ADVANCED DME SWITCHER
ESBK-7024

EXTERNAL SWITCHER INTERFACE BOARD
ESBK-7025

QSDI INTERFACE BOARD
ESBK-7031

SDI INTERFACE BOARD
ESBK-7032

DISK RECORDER BOARD
ESBK-7041

SCSI OPTION
ESBK-7051

ETHERNET OPTION
ESBK-7052

ESDRAW
ESBK-7071

FACTORY SERVICE MANUAL

追加版 -2

この追加版-2を、お持ちのマニュアルに追加および差し替えてご使用下さい。

対応マニュアル

1st Edition (9-977-661-01)

詳細は次ページ参照

SUPPLEMENT-2

Please add and replace your manual with this SUPPLEMENT-2

Applicable Manual

1st Edition (9-977-661-01)

Refer to next page for details.

ES-7 (J, UC, CE, 和、英)
9-977-661-82

Sony Corporation
Image & Sound Communication Company

Printed in Japan
1997. 7 08
© 1996
Published by
Engineering Services Dept.

内容

- 目次
- SECTION 1　BLOCK DIAGRAMS
- SECTION 2　SCHEMATIC DIAGRAMS
- SECTION 3　BOARD LAYOUTS
- SECTION 5　SPARE PARTS & OPTIONAL FIXTURES

次のページを差し替えてご使用ください

第1章　1-1, 1-2, 1-27, 1-28
第2章　2-169, 170, 187, 188
第3章　3-33～3-36
第5章　5-3～5-6, 5-105 以降

SUBJECT

- TABLE OF CONTENTS
- SECTION 1　BLOCK DIAGRAMS
- SECTION 2　SCHEMATIC DIAGRAMS
- SECTION 3　BOARD LAYOUTS
- SECTION 5　SPARE PARTS & OPTIONAL FIXTURES

Replace the following pages.

SECTION 1　1-1, 1-2, 1-27, 1-28
SECTION 2　2-169,170, 187, 188
SECTION 3　3-33 through 3-36
SECTION 5　5-3 through 5-6, 5-105 and higher

安全重要部品

⚠警告

⚠印のついた部品は安全性を維持するために重要な部品です。したがって，交換する時は必ず指定の部品を使ってください。

Safety Related Components Warning

Components marked ⚠ are critical to safe operation. Therefore, specified parts should be used in the case of replacement.

SAFETY CHECK-OUT

After correcting the original service problem, perform the following safety checks before releasing the set to the customer :

Check the metal trim, "metallized" knobs, screws, and all other exposed metal parts for AC leakage. Check leakage as described below.

LEAKAGE TEST

The AC leakage from any exposed metal part to earth ground and from all exposed metal parts to any exposed metal part having a return to chassis, must not exceed 0.5 mA. Leakage current can be measured by any one of three methods.

1. A commercial leakage tester, such as the Simpson 229 or RCA WT-540A. Follow the manufacturers' instructions to use these instruments.
2. A battery-operated AC milliammeter. The Data Precision 245 digital multimeter is suitable for this job.
3. Measuring the voltage drop across a resistor by means of a VOM or battery-operated AC voltmeter. The "limit" indication is 0.75 V, so analog meters must have an accurate low-voltage scale. The Simpson 250 and Sanwa SH-63Trd are examples of a passive VOM that is suitable. Nearly all battery operated digital multimeters that have a 2 V AC range are suitable. (See Fig. A)

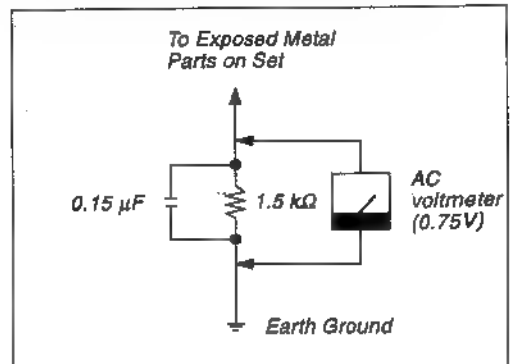

Fig A. Using an AC voltmeter to check AC leakage.

CAUTION

Danger of explosion if battery is incorrectly replaced.

Replace only with the same or equivalent type recommended by the manufacturer.
Dispose of used batteries according to the manufacturer's instructions.

ADVARSEL

Lithiumbatteri - Eksplosjonsfare.
Ved utskifting benyttes kun batteri som anbefalt av apparatfabrikanten.
Brukt batteri returneres apparatleverandøren.

Vorsicht!

Explosionsgefahr bei unsachgemäßem Austausch der Batterie.

Ersatz nur durch denselben oder einen vom Hersteller empfohlenen ähnlichen Typ.
Entsorgung gebrauchter Batterien nach Angaben des Herstellers.

VARNING

Explosionsfara vid felaktigt batteribyte.
Använd samma batterityp eller en likvärdig typ som rekommenderas av apparattillverkaren.
Kassera använt batteri enligt gällande föreskrifter.

ATTENTION

Il y a danger d'explosion s'il y a remplacement incorrect de la batterie.

Remplacer uniquement avec une batterie du même type ou d'un type équivalent recommandé par le constructeur.
Mettre au rebut les batteries usagées conformément aux instructions du fabricant.

VAROITUS

Paristo voi räjähtää jos se on virheellisesti asennettu.
Vaihda paristo ainoastaan laitevalmistajan suosittelemaan tyyppiin.
Hävitä käytetty paristo valmistajan ohjeiden mukaisesti.

ADVARSEL!

Lithiumbatteri-Eksplosionsfare ved fejlagtig håndtering.
Udskiftning må kun ske med batteri af samme fabrikat og type.
Levér det brugte batteri tilbage til leverandøren.

CAUTION

Use of Controls or adjustments or performance of procedures other than those specified herein may result in hazardous radiation exposure.

CLASS 1 LASER PRODUCT
LASER KLASSE 1
LUOKAN 1 LASERLAITE
KLASS 1 LASERAPPARAT

This ES-7 is classified as a CLASS 1 LASER PRODUCT.
The CLASS 1 LASER PRODUCT label is located on the rear panel.

目次
TABLE OF CONTENTS

1. BLOCK DIAGRAMS

OVERALL BLOCK 1-1
AUDIO BLOCK (SIGNAL section) 1-2
SYSTEM CONTROL 1-3
VIDEO I/O 1-4
VRAM 1-5
POWER SUPPLY 1-6
VIDEO INPUT 1-7
VIDEO OUTPUT 1-8
CPU 1-10
FRAME 1-11
MEMORY 1-12
3D EFFECT 1-15
CPU 1-16
SWITCHER 1-17
MEMORY 1-18
ADDRESS GEN 1-20
LIGHTING 1-21
TRAIL 1-22
MONITOR 1-23
QSDI I/F, SDI I/F 1-24
DISK UNIT CONTROL 1-25
AUDIO 1-26
VIDEO 1-27
AUDIO BLOCK (CONTROL section) 1-28

2. SCHEMATIC DIAGRAMS

AU-217 2-2
SY-219 2-25
VPR-18 2-30
DUS-27 2-33
DSC-75/75A 2-34
BF-54 2-37
RE-122/122A 2-38
AD-115/115A 2-40
DA-95/95A 2-59
FM-43/43A 2-72
MY-74 2-82
PU-84A 2-90
FM-44/44A 2-94
MY-75 2-104
VE-33/33A 2-118
DAC-20/20A 2-126
IO-119 2-132
IO-148 2-154
MPU-95 2-170
RP-89/89A 2-188
FRAME 2-222
SEC-50 2-231

3. BOARD LAYOUTS

AU-217 3-2
SY-219 3-4
VPR-18 3-6
DSC-75/75A 3-8
BF-54 3-9
RE-122/122A 3-10
AD-115/115A 3-12
DA-95/95A 3-14
FM-43/43A 3-16
MY-74 3-18
PU-84A 3-20
FM-44/44A 3-22
MY-75 3-24
VE-33/33A 3-26
DAC-20/20A 3-28
IO-119 3-30
IO-148 3-32
MPU-95 3-34
RP-89/89A 3-36

4. SEMICONDUCTOR PIN ASSIGNMENTS

5. SPARE PARTS & OPTIONAL FIXTURES

5-1. NOTES ON SPARE PARTS 5-1
5-2. EXPLODED VIEWS 5-2
5-3. ELECTRICAL PARTS LIST 5-14
5-4. PACKING MATERIAL & SUPPLIED ACCESSORIES 5-118
5-5. OPTIONAL FIXTURES 5-119

SECTION 1
BLOCK DIAGRAMS

OVERALL BLOCK

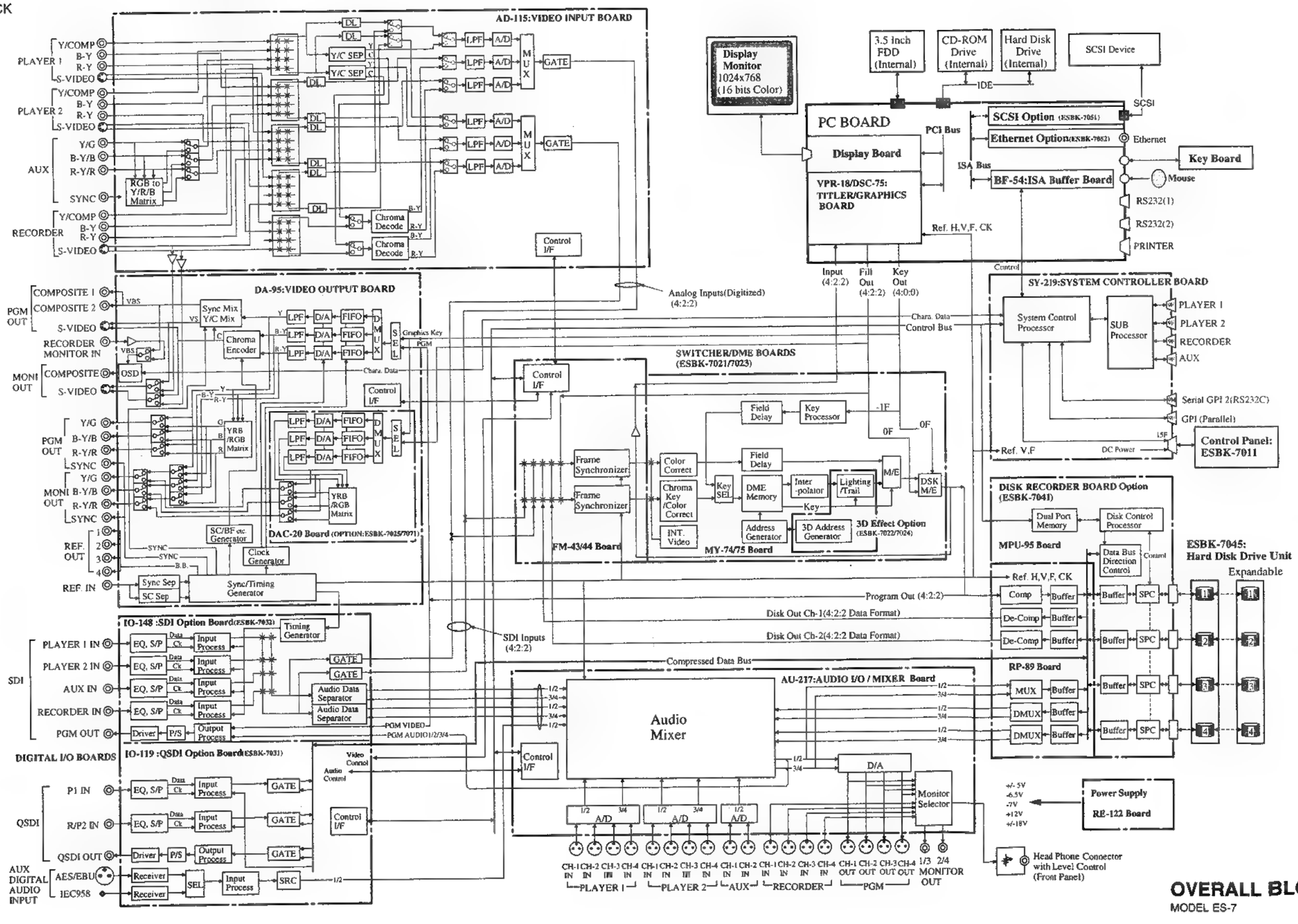

OVERALL BLOCK
MODEL ES-7

AU-217 : SIGNAL section

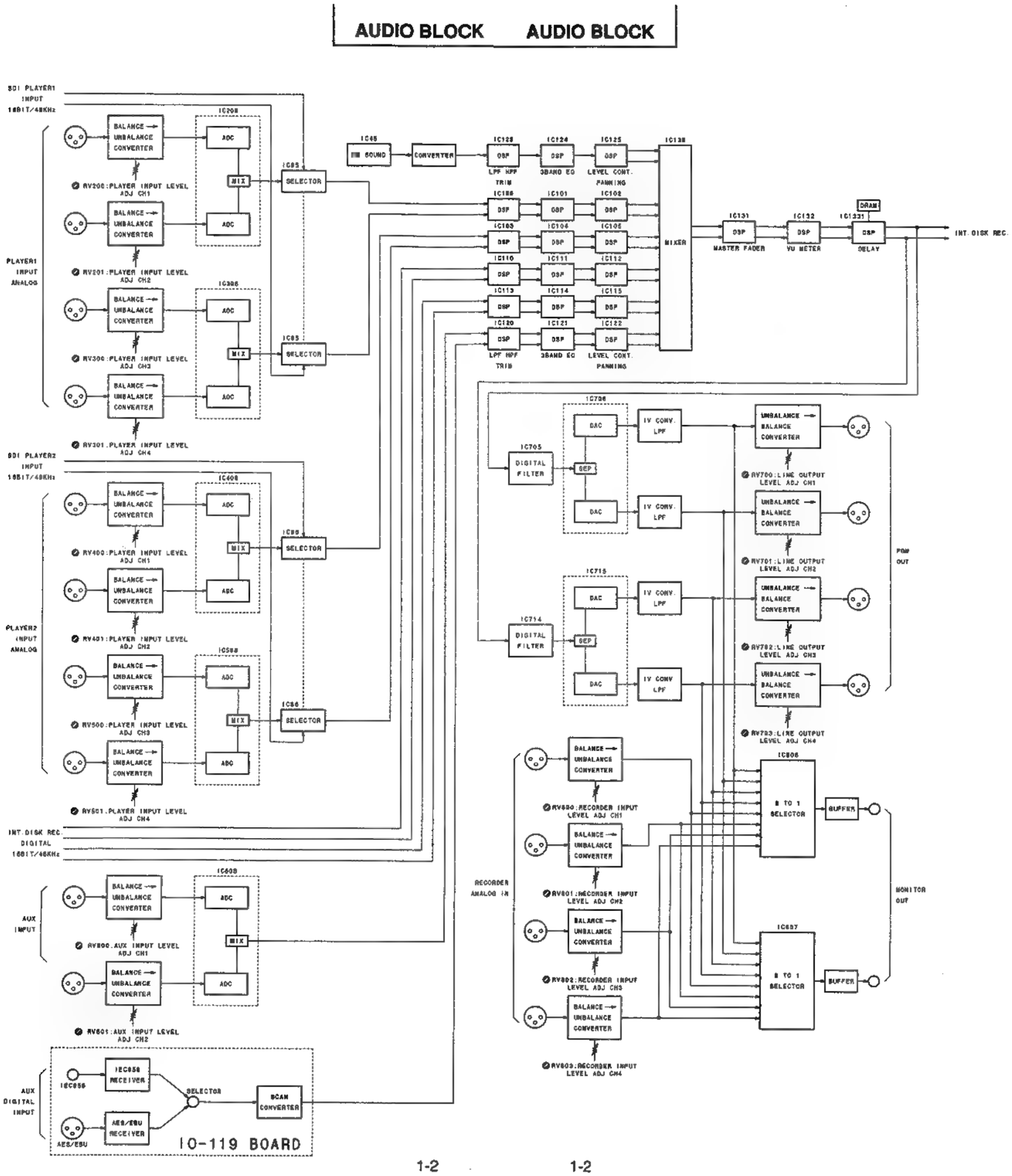

1-2 1-2

AU-217 (1/2)
MODEL ES-7
B-ES7-AU217-BLOCK

RP-89/89A (2/2) : VIDEO

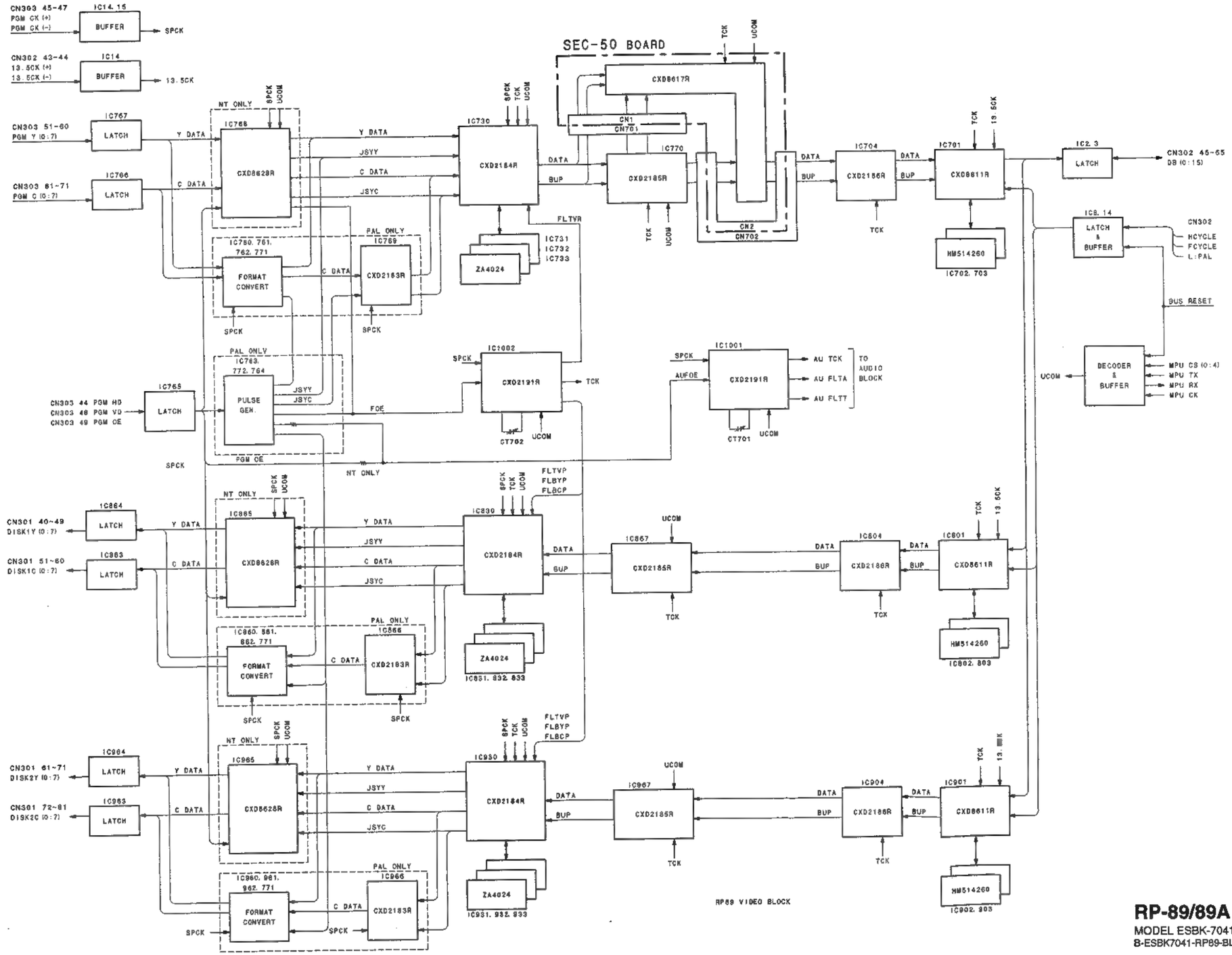

RP-89/89A (2/2)
MODEL ESBK-7041
8-ESBK7041-RP89-BLOCK-VIDEO

AU-217 : CONTROL section

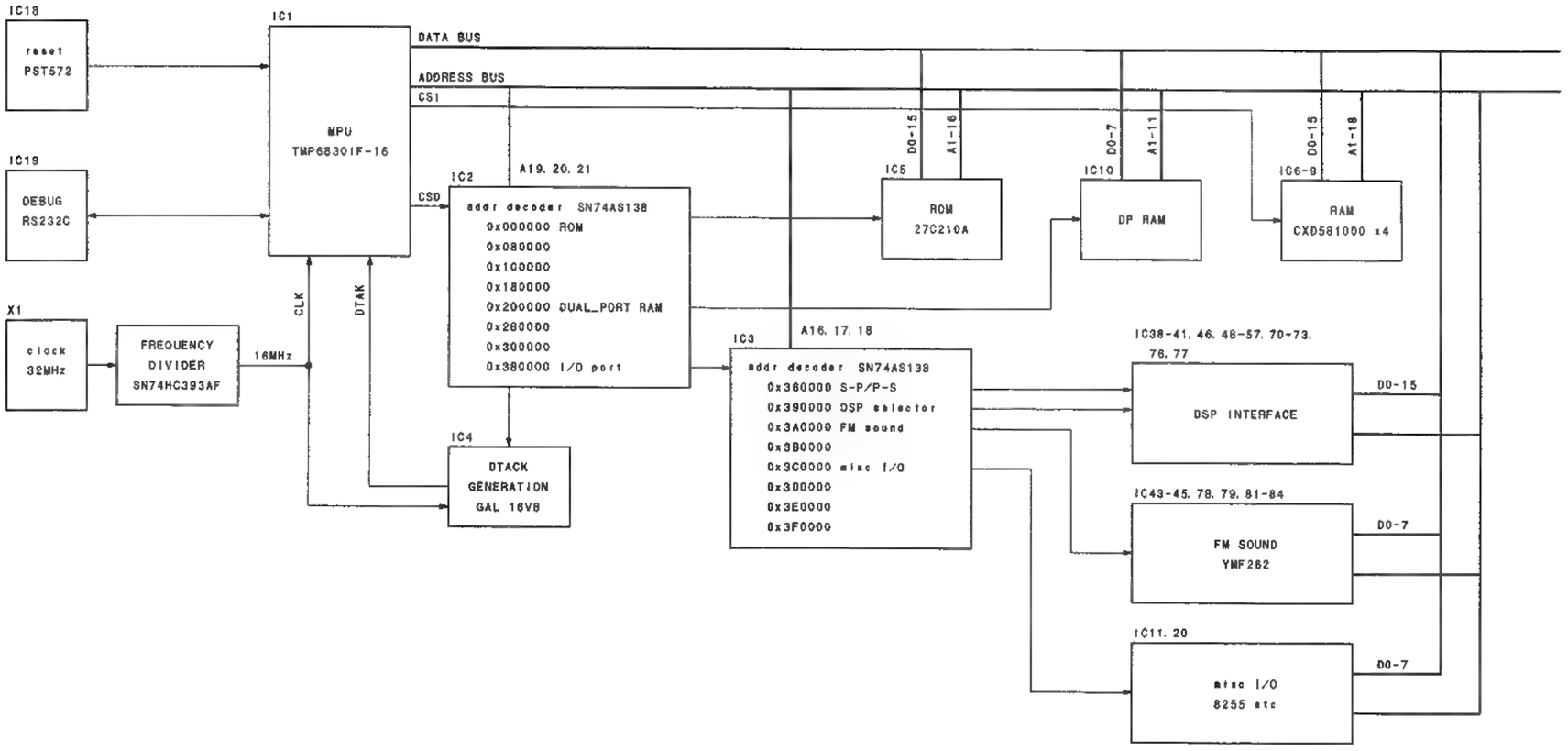

AU-217 (2/2)
MODEL ES-7

IO-119 CONNECT

CN21

(TO IO-119)

CN21	A	B	C
1	13.5MCK (-)	GND	13.5MCK (+)
2	GND	GND	GND
3	PGM HD	PGM VD	PGM FD
4	CXD HD	CXD VD	CXD FD
5	GND	GND	GND
6	AU FS	AU 64FS	AU 128FS
7	PGM:AU 3/4	PGM:AU 1/2	GND
8	A1 A3/4	A1 A1/2	GND
9	A2 A3/4	A2 A1/2	GND
10	GND	GND	GND
11	PGM DATA13	PGM DATA14	PGM DATA15
12	PGM DATA11	GND	PGM DATA12
13	PGM DATA8	PGM DATA9	PGM DATA10
14	PGM DATA6	GND	PGM DATA7
15	PGM DATA3	PGM DATA4	PGM DATA5
16	PGM DATA0	PGM DATA1	PGM DATA2
17	GND	GND	GND
18	SDI V1 13	SDI V1 14	SDI V1 15
19	SDI V1 11	GND	SDI V1 12
20	SDI V1 8	SDI V1 9	SDI V1 10
21	SDI V1 6	GND	SDI V1 7
22	SDI V1 3	SDI V1 4	SDI V1 5
23	SDI V1 0	SDI V1 1	SDI V1 2
24	GND	GND	GND
25	SDI V2 13	SDI V2 14	SDI V2 15
26	SDI V2 11	GND	SDI V2 12
27	SDI V2 8	SDI V2 9	SDI V2 10
28	SDI V2 6	GND	SDI V2 7
29	SDI V2 3	SDI V2 4	SDI V2 5
30	SDI V2 0	SDI V2 1	SDI V2 2
31	GND	GND	GND
32	UP13.5CK (-)	GND	UP13.5CK (+)

CN23

(TO IO-119)

CN23	A	B	C
32	13.5MCK (-)	GND	13.5MCK (+)
31	GND	GND	GND
30	PGM HD	PGM VD	PGM FD
29	CXD HD	CXD VD	CXD FD
28	GND	GND	GND
27	AU FS	AU 64FS	AU 128FS
26	PGM:AU 3/4	PGM:AU 1/2	GND
25	A1 A3/4	A1 A1/2	GND
24	A2 A3/4	A2 A1/2	GND
23	GND	GND	GND
22	PGM DATA13	PGM DATA14	PGM DATA15
21	PGM DATA11	GND	PGM DATA12
20	PGM DATA8	PGM DATA9	PGM DATA10
19	PGM DATA6	GND	PGM DATA7
18	PGM DATA3	PGM DATA4	PGM DATA5
17	PGM DATA0	PGM DATA1	PGM DATA2
16	GND	GND	GND
15	SDI V1 13	SDI V1 14	SDI V1 15
14	SDI V1 11	GND	SDI V1 12
13	SDI V1 8	SDI V1 9	SDI V1 10
12	SDI V1 6	GND	SDI V1 7
11	SDI V1 3	SDI V1 4	SDI V1 5
10	SDI V1 0	SDI V1 1	SDI V1 2
9	GND	GND	GND
8	SDI V2 13	SDI V2 14	SDI V2 15
7	SDI V2 11	GND	SDI V2 12
6	SDI V2 8	SDI V2 9	SDI V2 10
5	SDI V2 6	GND	SDI V2 7
4	SDI V2 3	SDI V2 4	SDI V2 5
3	SDI V2 0	SDI V2 1	SDI V2 2
2	GND	GND	GND
1	UP13.5CK (-)	GND	UP13.5CK (+)

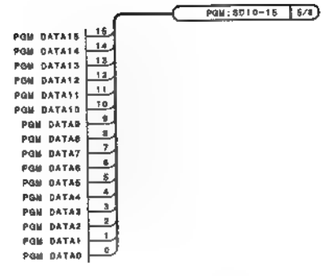

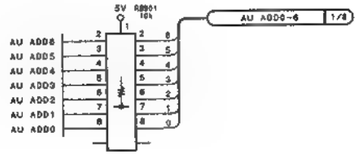

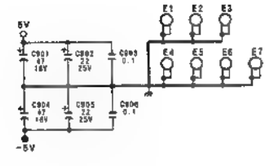

CN22

(TO IO-119)

CN22	A	B	C
1	CK_13.5B (+)	V2:REF_SW	V1:REF_SW
2	HD_SW	VD_SW	FD_SW
3	GND	GND	CHNG_VD
4	SW:DA	SW:CS	SW:CK
5	MIX:DA	MIX:CS	MIX:CK
6	GND	GND	GND
7	5V	GND	GND
8	5V	5V	5V
9	LED_PAL	LED_NT	5V
10	AU ADD5	AU ADD6	AU ADD7
11	AU ADD2	AU ADD3	AU ADD4
12	NC3	AU ADD0	AU ADD1
13	AU DATA5	AU DATA6	AU DATA7
14	AU DATA2	AU DATA3	AU DATA4
15	NC4	AU DATA0	AU DATA1
16	AUX:AU_CS	P2:AU_CS	P1:AU_CS
17	ERR-AU_CS	PGM:AU_CS	R:AU_CS
18	NC5	WR	RD
19	SD	SA	CKD
20	AUX_CS	P2_CS	P1_CS
21	NC6	PGM_CS	R_CS
22	NC11	GND	NC10
23	SDI:FD OUT	GND	NC12
24	148G	GND	SDI:FD IN
25	148E	GND	148F
26	148C	GND	148D
27	BOARD ON	ADJ_TN	525/625
28	148A	148B	U:R&Y
29	GND	NC20	SDI_CLK
30	GND	GND	GND
31	-5V	-5V	GND
32	-5V	-5V	-5V

CN24

(TO IO-119)

CN24	A	B	C
32	CK_13.5B (+)	V2:REF_SW	V1:REF_SW
31	HD_SW	VD_SW	FD_SW
30	GND	GND	CHNG_VD
29	SW:DA	SW:CS	SW:CK
28	MIX:DA	MIX:CS	MIX:CK
27	GND	GND	GND
26	5V	GND	GND
25	5V	5V	5V
24	LED_PAL	LED_NT	5V
23	AU ADD5	AU ADD6	AU ADD7
22	AU ADD2	AU ADD3	AU ADD4
21	NC3	AU ADD0	AU ADD1
20	AU DATA5	AU DATA6	AU DATA7
19	AU DATA2	AU DATA3	AU DATA4
18	NC4	AU DATA0	AU DATA1
17	AUX:AU_CS	P2:AU_CS	P1:AU_CS
16	ERR-AU_CS	PGM:AU_CS	R:AU_CS
15	NC6	WR	RD
14	SD	SA	CKD
13	AUX_CS	P2_CS	P1_CS
12	NC8	PGM_CS	R_CS
11	NC11	GND	NC10
10	SDI:FD OUT	GND	NC12
9	148G	GND	SDI:FD IN
8	148E	GND	148F
7	148C	GND	148D
6	BOARD ON	ADJ_TN	525/625
5	148A	148B	U:R&Y
4	GND	NC20	SDI_CLK
3	GND	GND	GND
2	-5V	-5V	GND
1	-5V	-5V	-5V

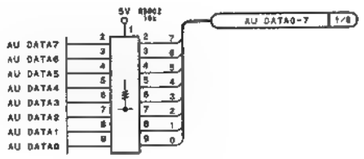

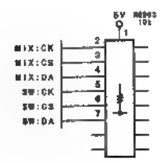

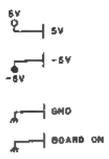

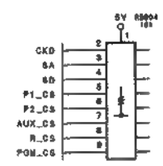

IO-148 (8/8)
PART NO 1-661-796-11
MODEL ESBK-7032
B-ESBK7032-IO148-11

MAIN

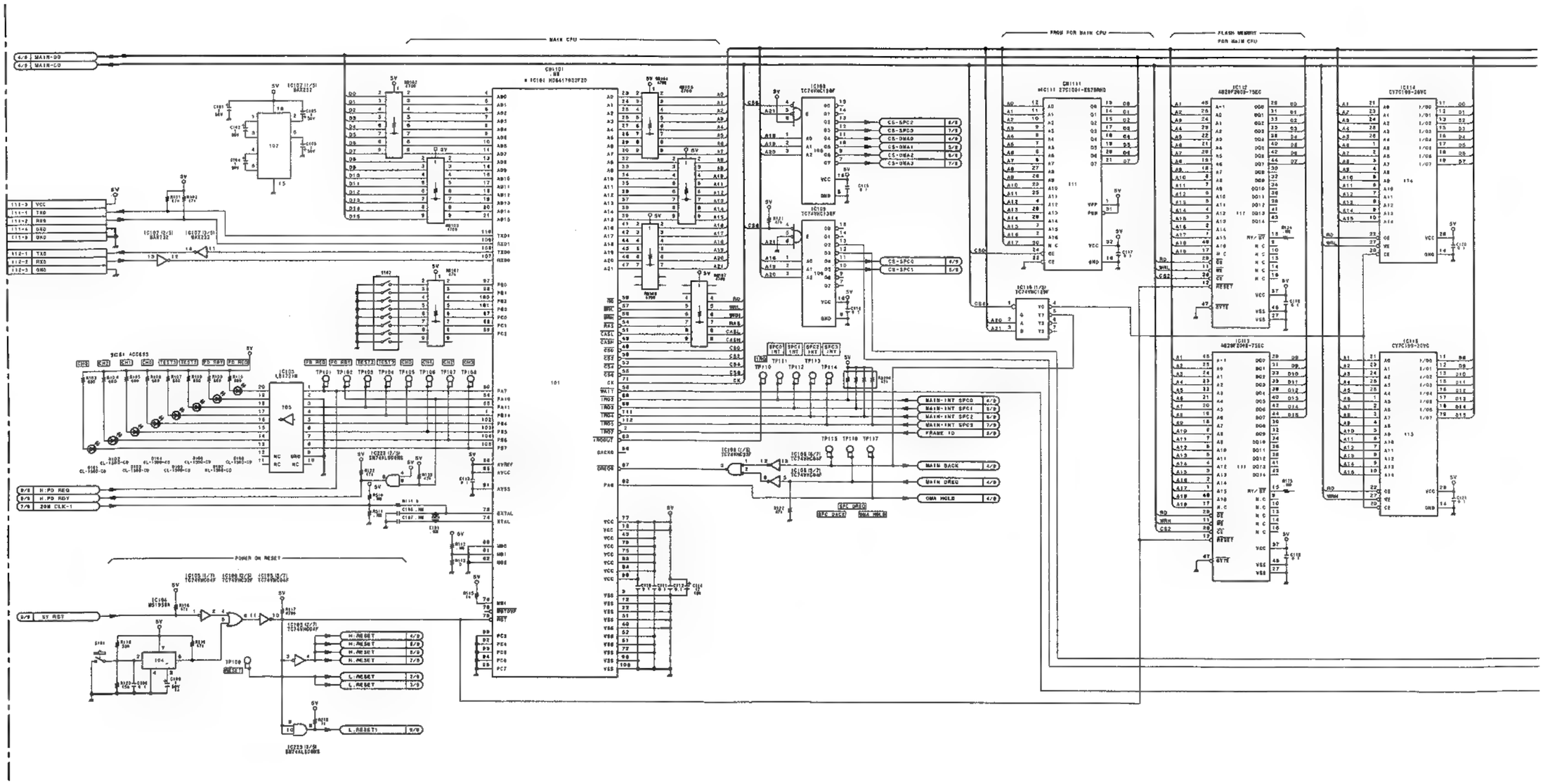
MAIN CPU
PROG FOR MAIN CPU
FLASH MEMORY FOR MAIN CPU
POWER ON RESET
MAIN-D0
MAIN-C0
H:PD REQ
H:PD RDY
20M CLK-1
5V RST
MAIN-INT SPC0
MAIN-INT SPC1
MAIN-INT SPC2
MAIN-INT SPC3
FRAME FD
MAIN BACK
MAIN DREQ
DMA HOLD
H.RESET
L.RESET
CS-SPC2
CS-SPC3
CS-DMA0
CS-DMA1
CS-DMA2
CS-SPC0
CS-SPC1

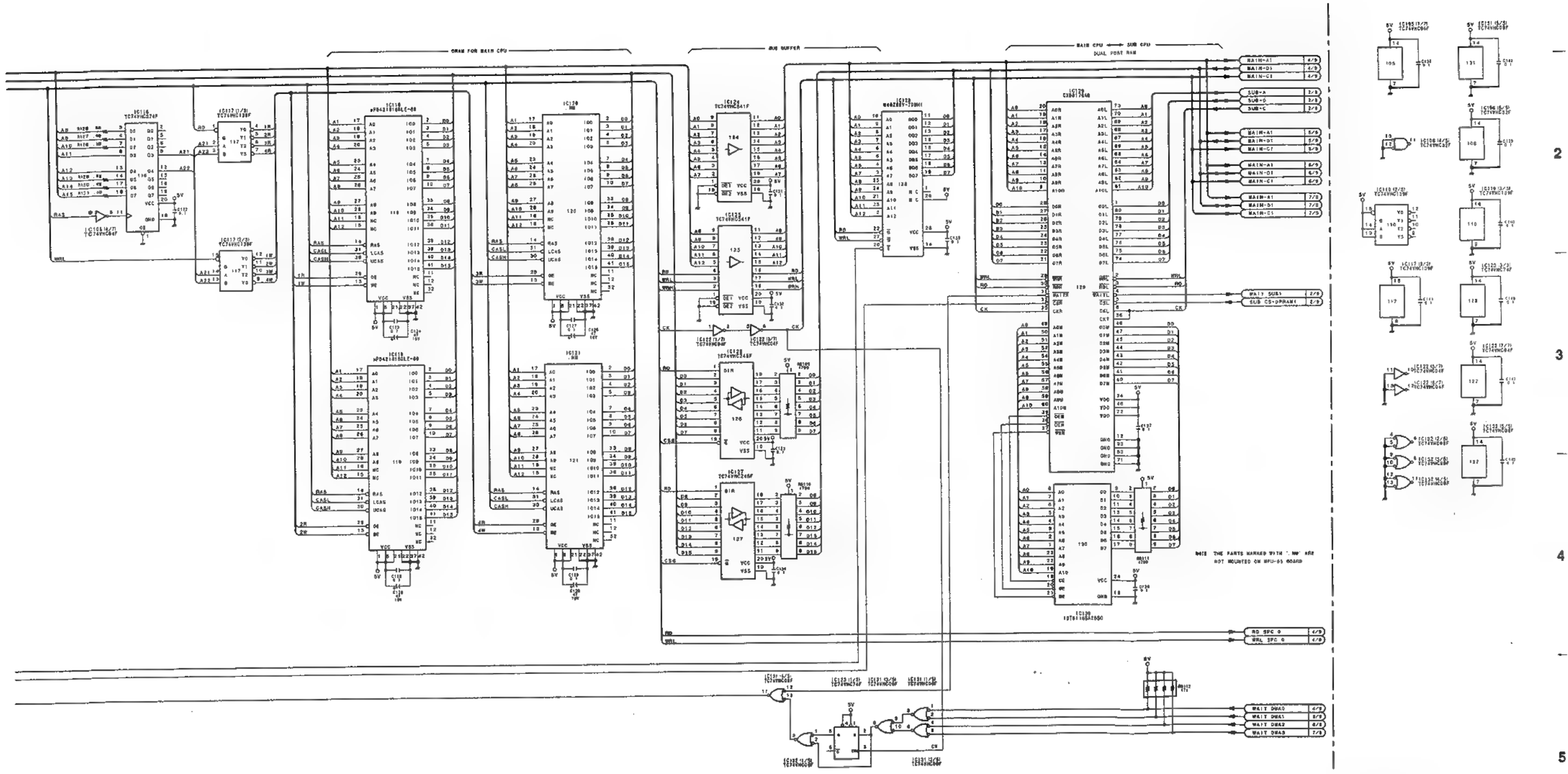

MPU-95 (1/9)
PART NO 1-662-793-12
MODEL ESBK-7041
B-ESBK7041-MPU95-12

SUB

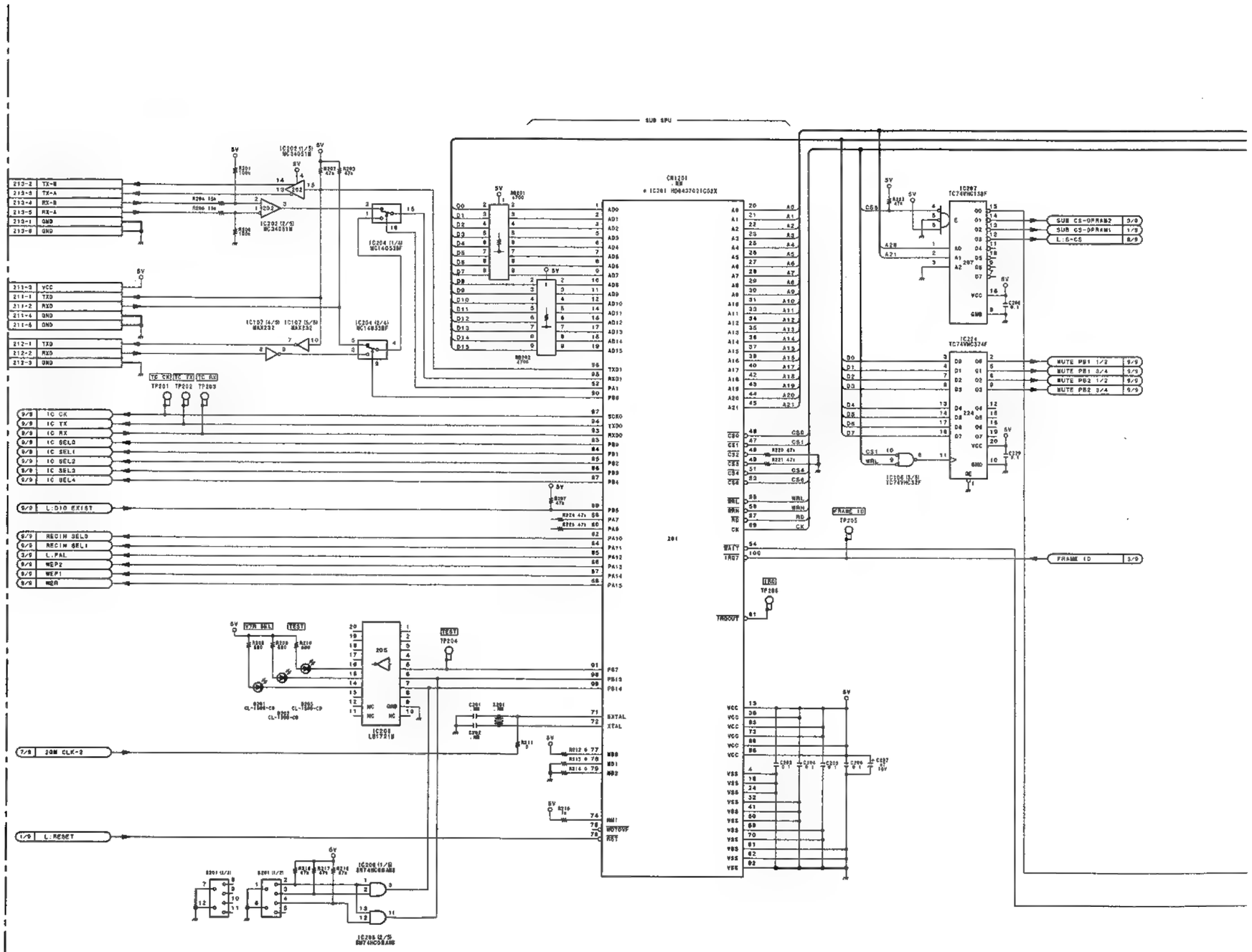

2-172 (1) 2-172 (1)

ESBK-7041

A B C D E F G H

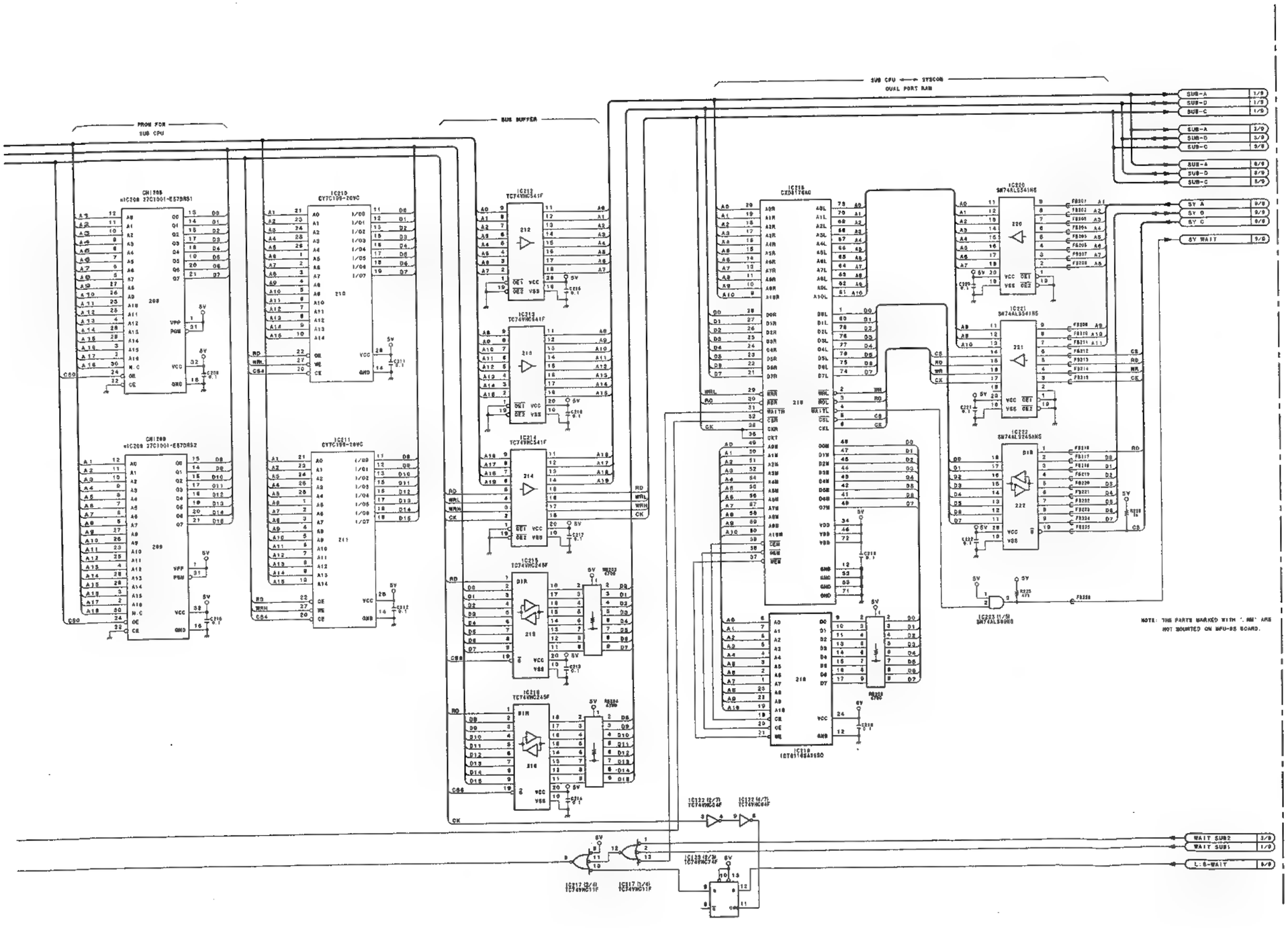

MPU-95 (2/9)
PART NO 1-662-793-12
MODEL ESBK-7041
B-ESBK7041-MPU95-12

BUS

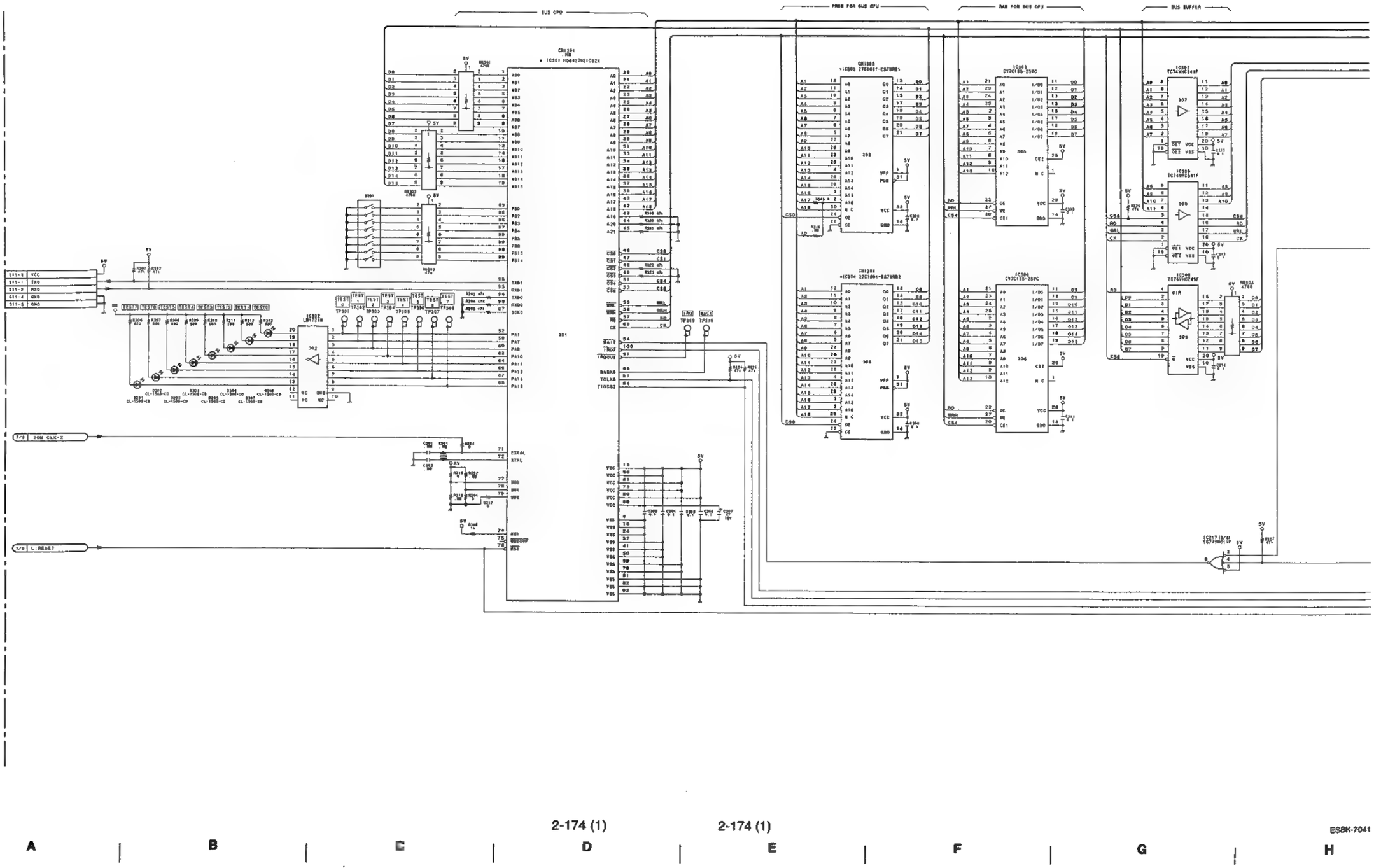
BUS CPU
PROM FOR BUS CPU
RAM FOR BUS CPU
BUS BUFFER
CN1301
IC301 HD6437801CP2H
IC302 LH5716N
IC303 27C1001-E570MB1
IC304 27C1001-E570MB2
IC305 CY7C185-25PC
IC306 CY7C185-25PC
IC307 TC74VHC541F
IC308 TC74VHC541F
IC309 TC74VHC245F
IC310 TC74VHC245F
IC311 TC74VHC14F
IC312 TC74VHC14F
IC313 TC74VHC14F
IC314 TC74VHC14F
IC315 TC74VHC14F
IC316 TC74VHC14F
IC317 TC74VHC11F
IC318 TC74VHC11F
IC319 TC74VHC11F
IC320 TC74VHC11F
IC321 TC74VHC11F
IC322 TC74VHC11F
IC323 TC74VHC11F
IC324 TC74VHC11F
IC325 TC74VHC11F
IC326 TC74VHC11F
IC327 TC74VHC11F
IC328 TC74VHC11F
IC329 TC74VHC11F
IC330 TC74VHC11F
IC331 TC74VHC11F
IC332 TC74VHC11F
IC333 TC74VHC11F
IC334 TC74VHC11F
IC335 TC74VHC11F
IC336 TC74VHC11F

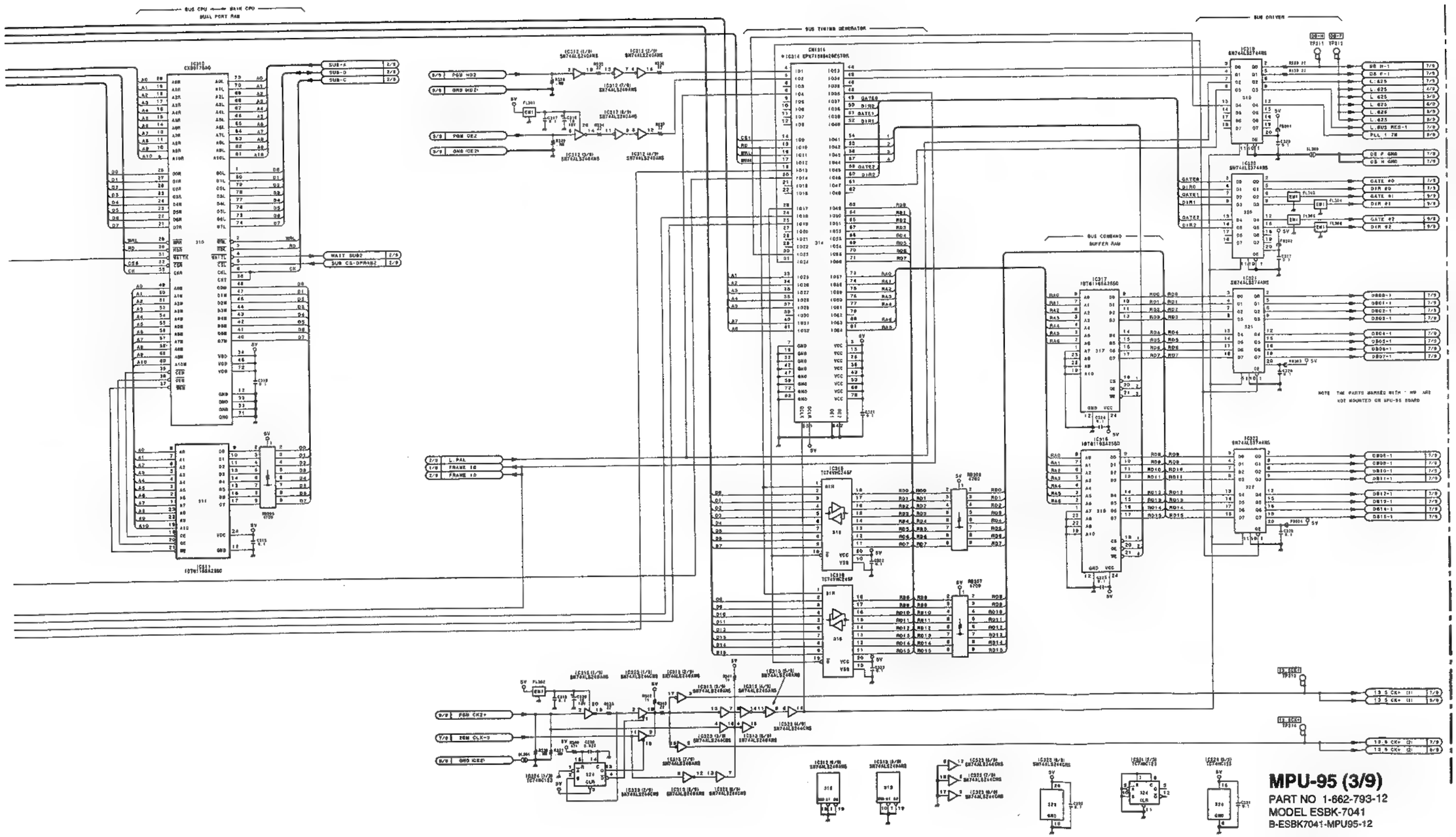

MPU-95 (3/9)
PART NO 1-662-793-12
MODEL ESBK-7041
B-ESBK7041-MPU95-12

2-175 (1) 2-175 (1)

ESBK-7041

SCSI #0

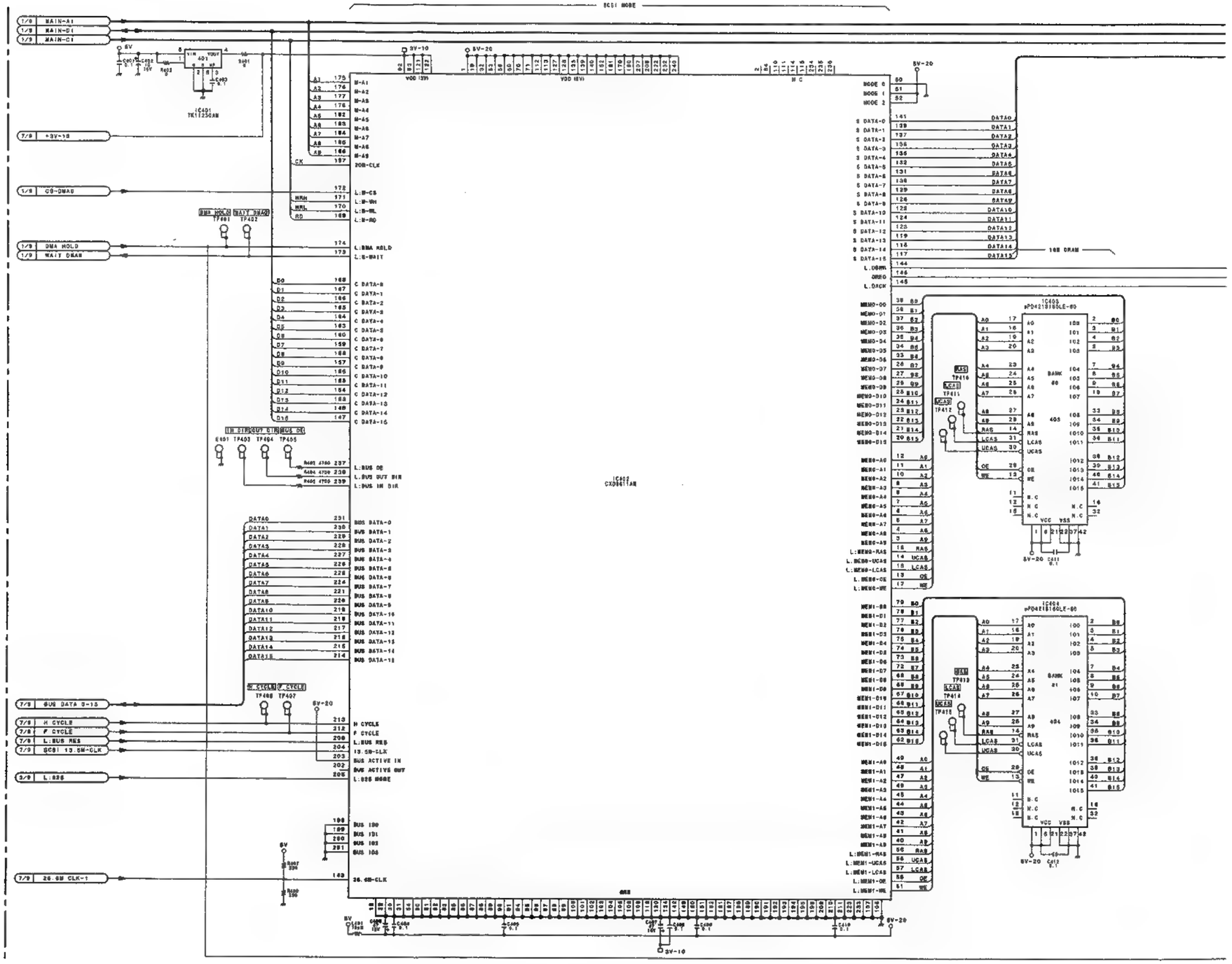

2-176 (1) 2-176 (1)

ESBK-7041

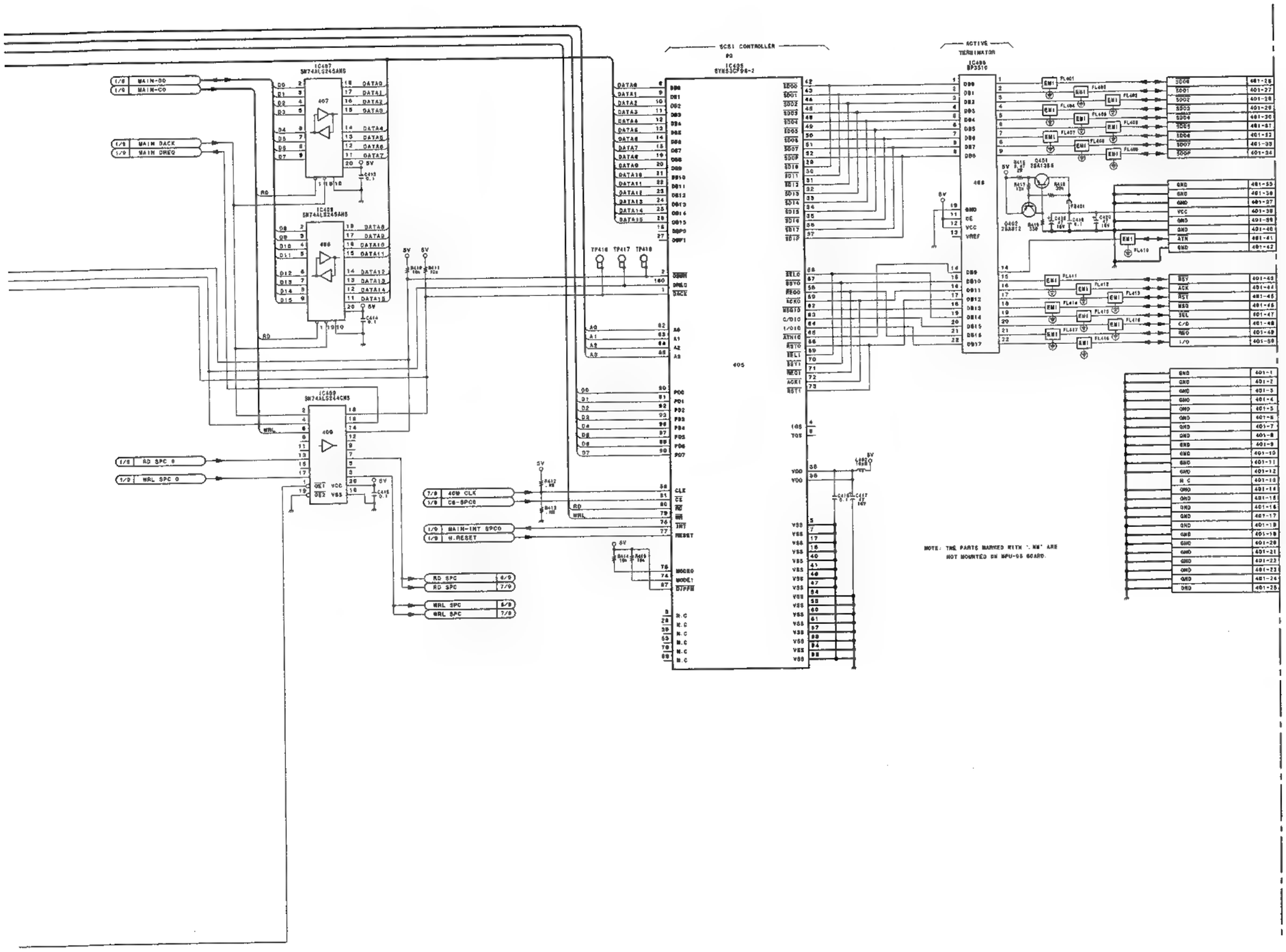

MPU-95 (4/9)
PART NO 1-662-793-12
MODEL ESBK-7041
B-ESBK7041-MPU95-12

SCSI #1

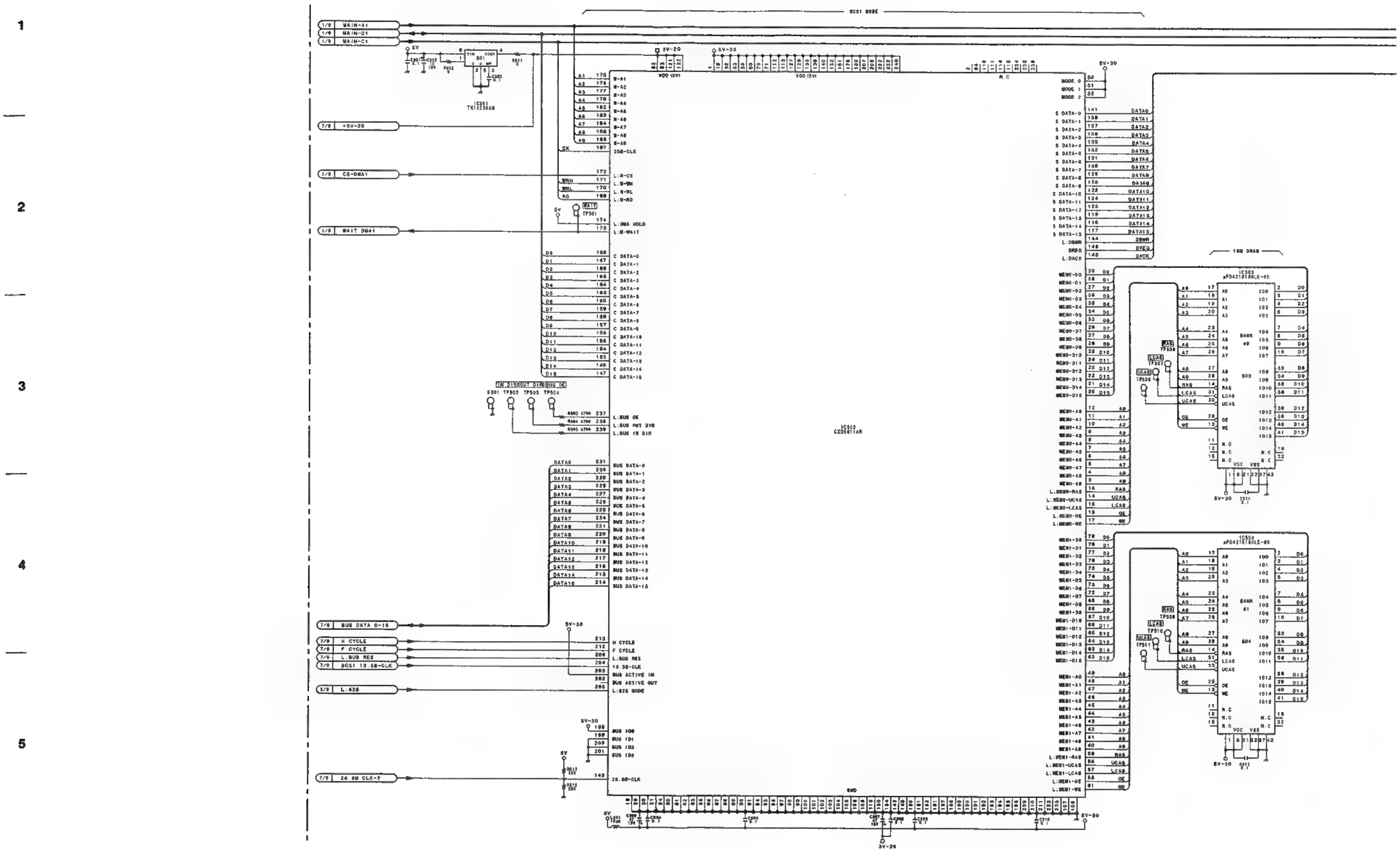
1
2
3
4
5
A
B
C
D
E
F
G
H
SCSI MODE
MAIN-A1
MAIN-D1
MAIN-C1
+5V-20
CS-DMA1
WAIT DMA1
BUS DATA 0-15
H CYCLE
F CYCLE
L:BUS RES
L:626
26.8M CLK-2
IC501
TK11230AM
IC502
CXD8811AR
IC503
IC504
16M DRAM
GND
VDD (5V)
R.C
ESBK-7041

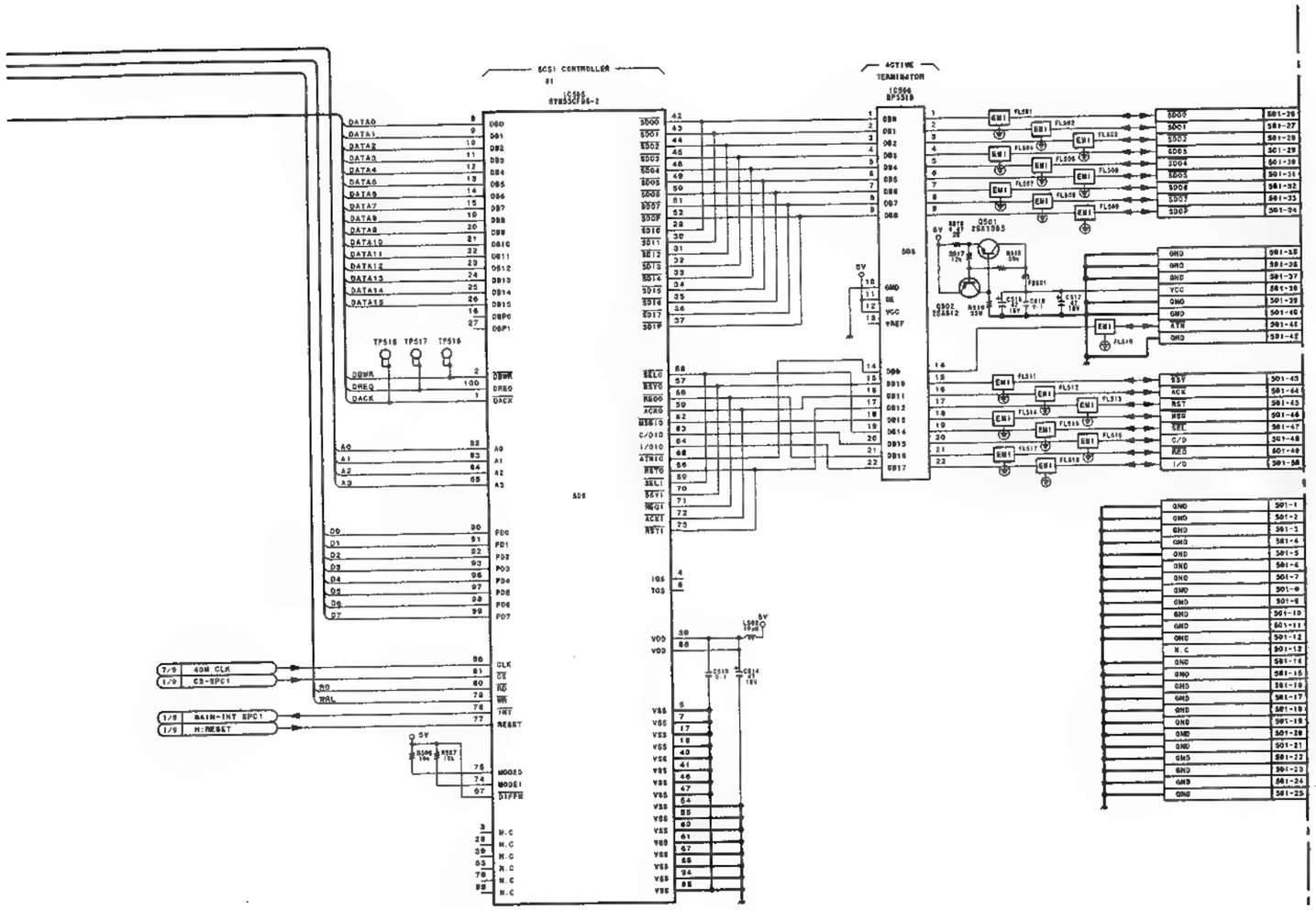

MPU-95 (5/9)
PART NO 1-662-793-12
MODEL ESBK-7041
B-ESBK7041-MPU95-12

SCSI #2

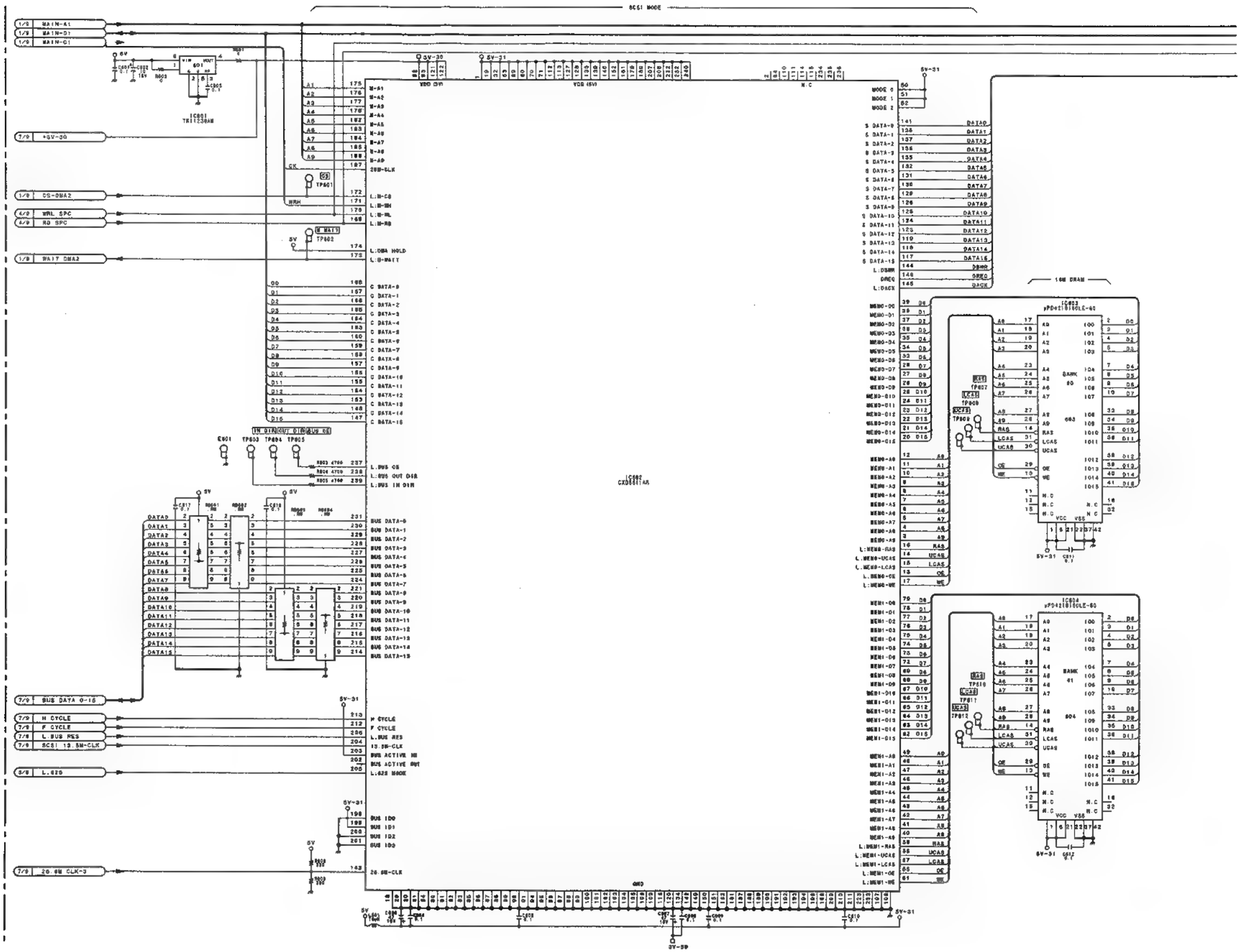

2-180 (1) 2-180 (1)

ESBK-7041

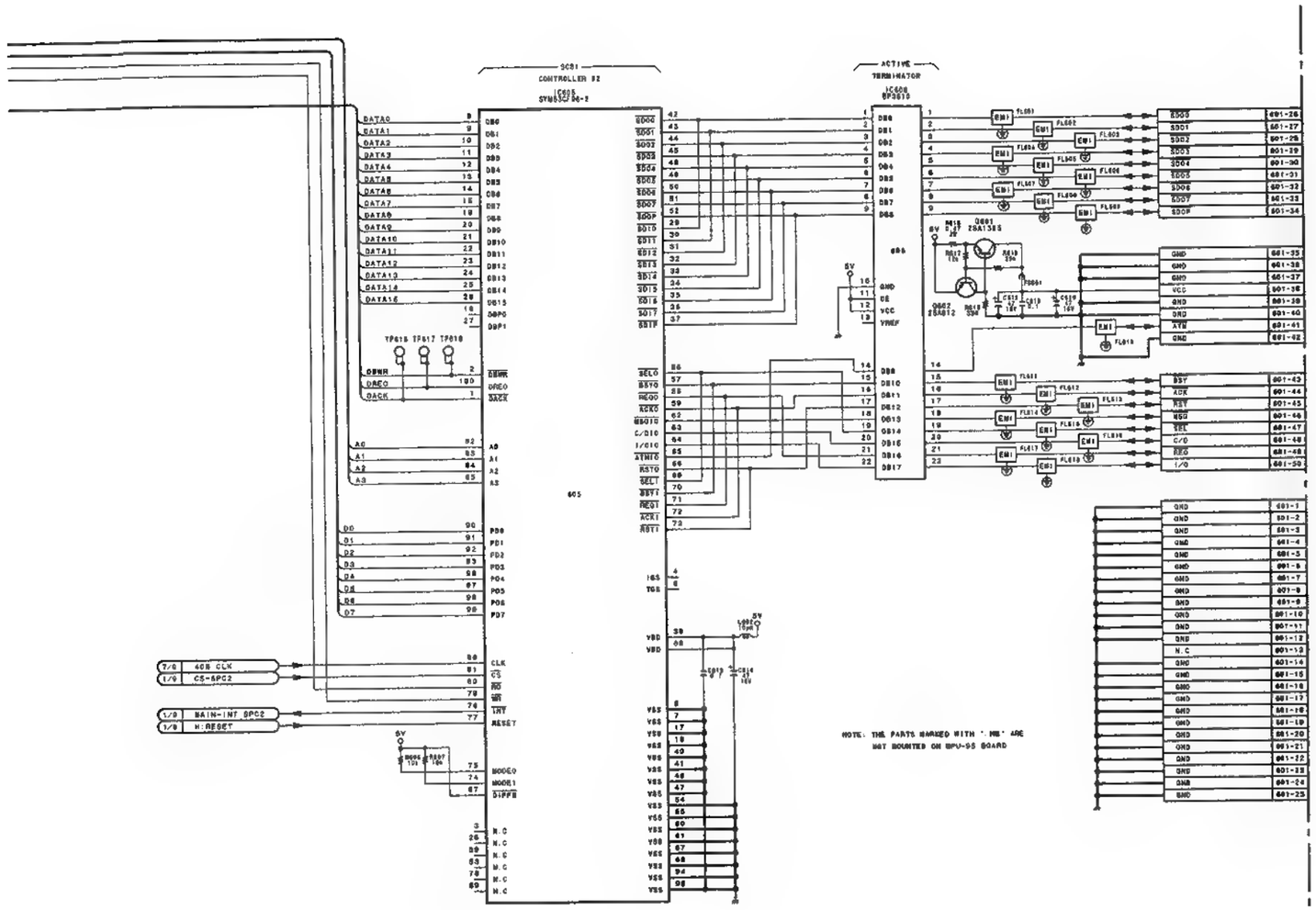

NOTE: THE PARTS MARKED WITH '*MB' ARE NOT MOUNTED ON MPU-95 BOARD

MPU-95 (6/9)
PART NO 1-662-793-12
MODEL ESBK-7041
B-ESBK7041-MPU95-12

SCSI #3

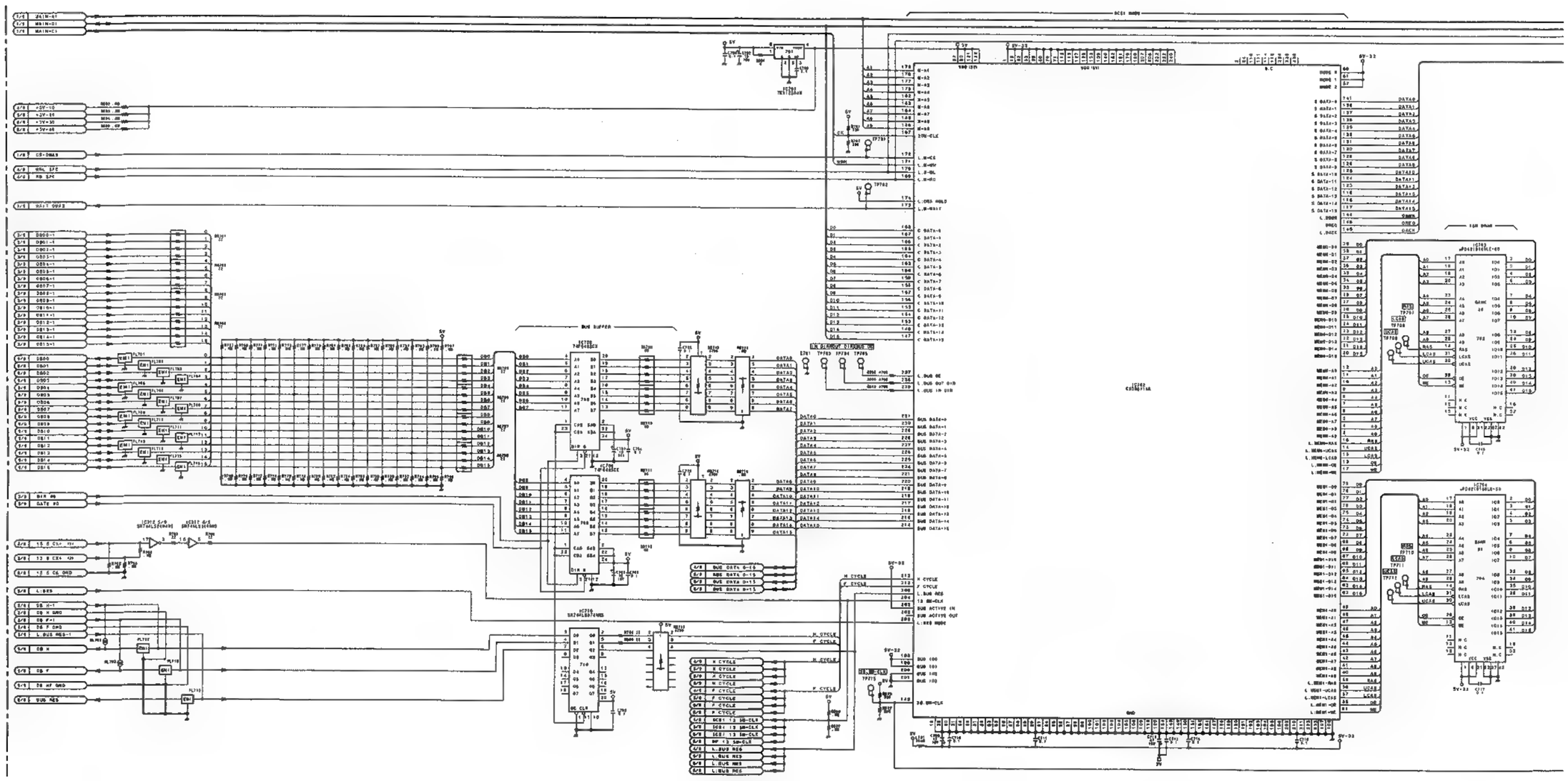

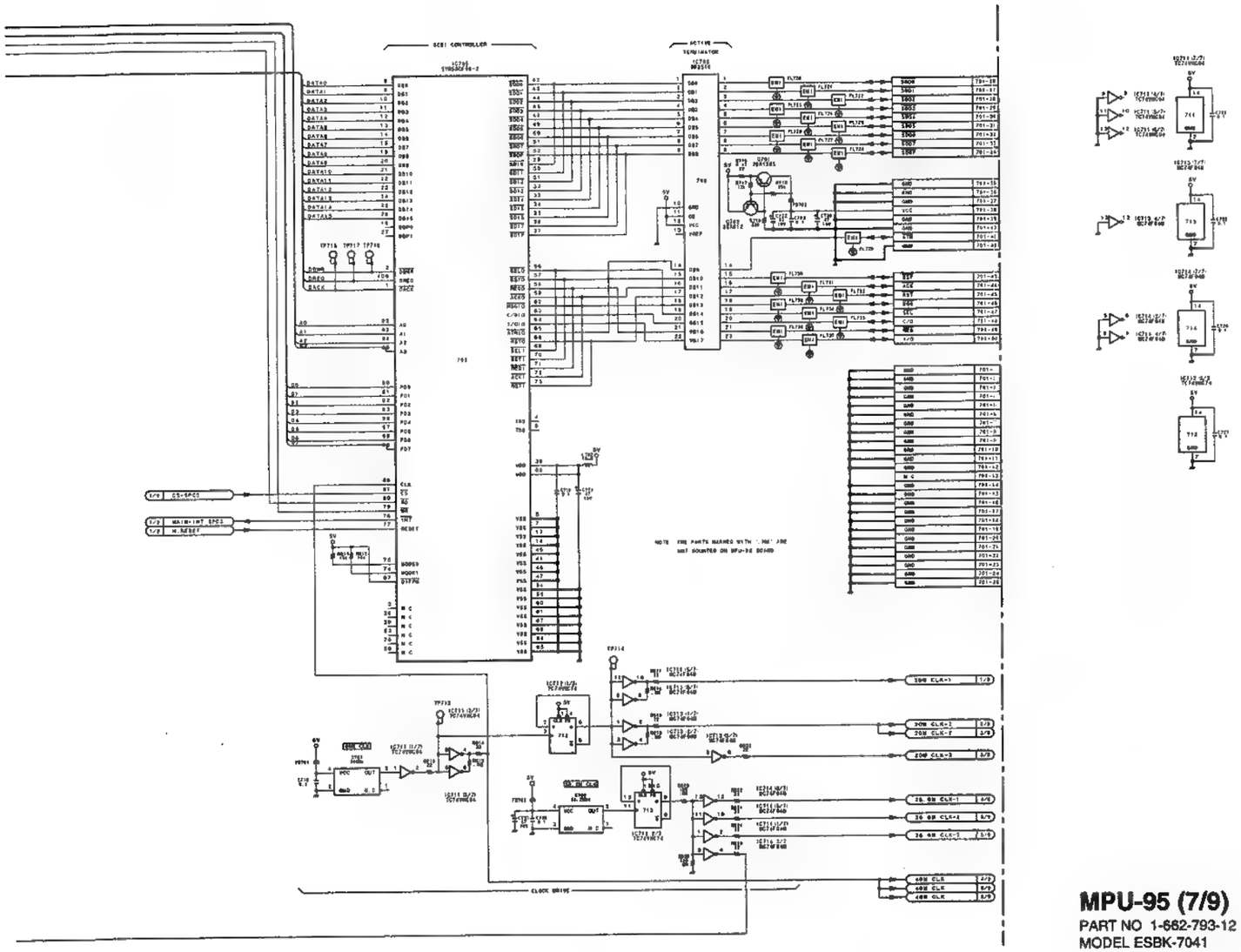

MPU-95 (7/9)
PART NO 1-662-793-12
MODEL ESBK-7041
B-ESBK7041-MPU95-12

DP BUF

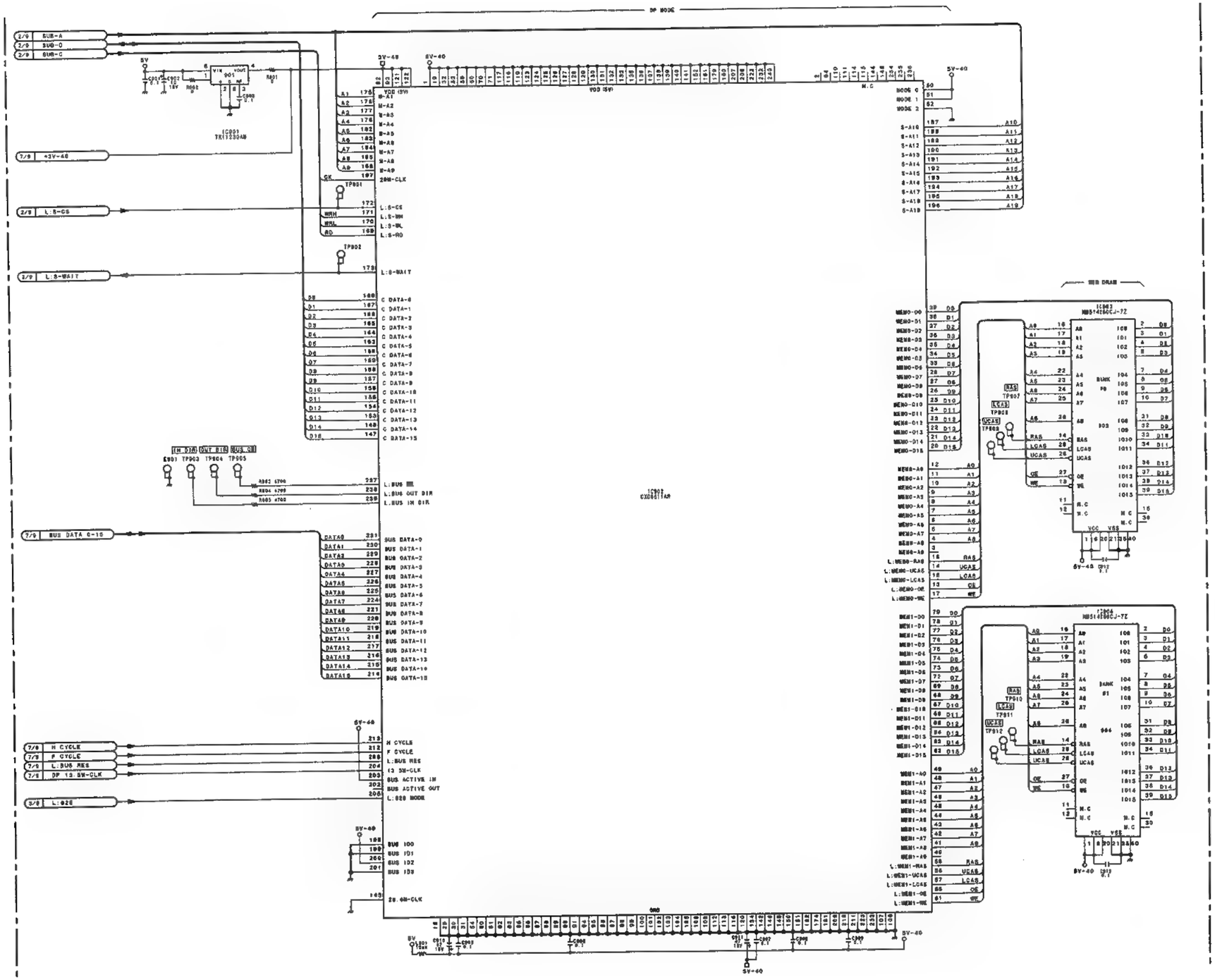

MPU-95 (8/9)
PART NO 1-662-793-12
MODEL ESBK-7041
B-ESBK7041-MPU95-12

CONNECTOR

1

2

3

4

5

CN201

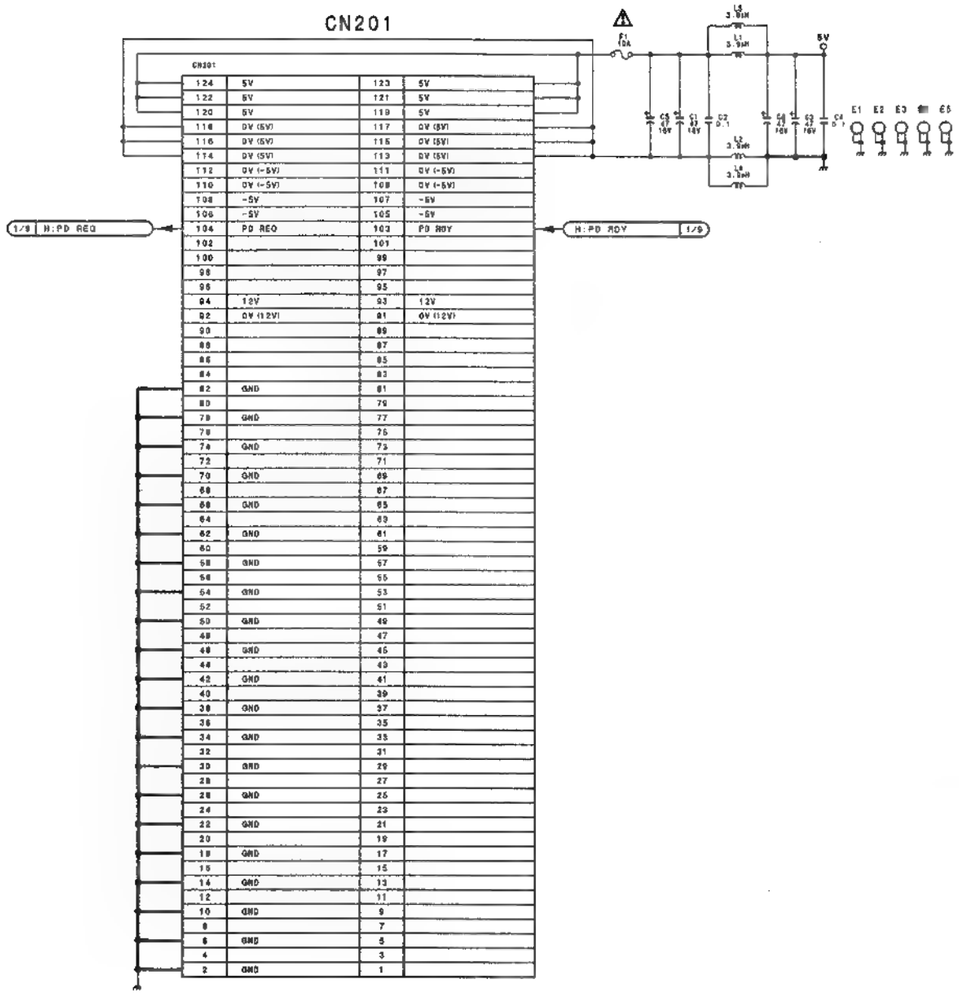

CN202

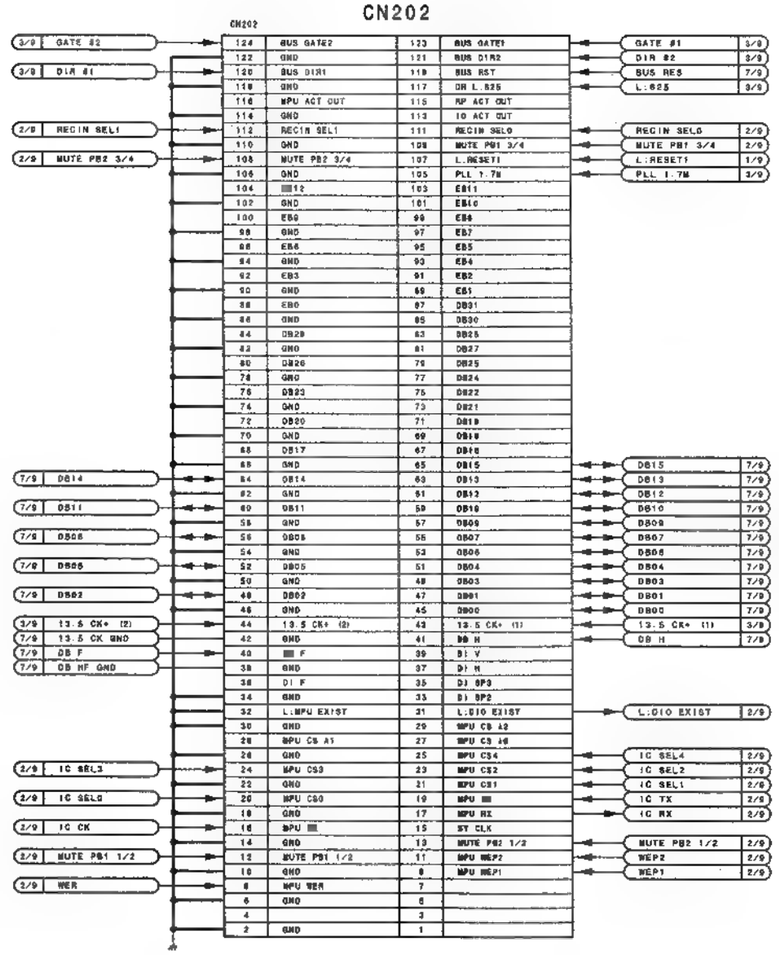

A B C D E F G H

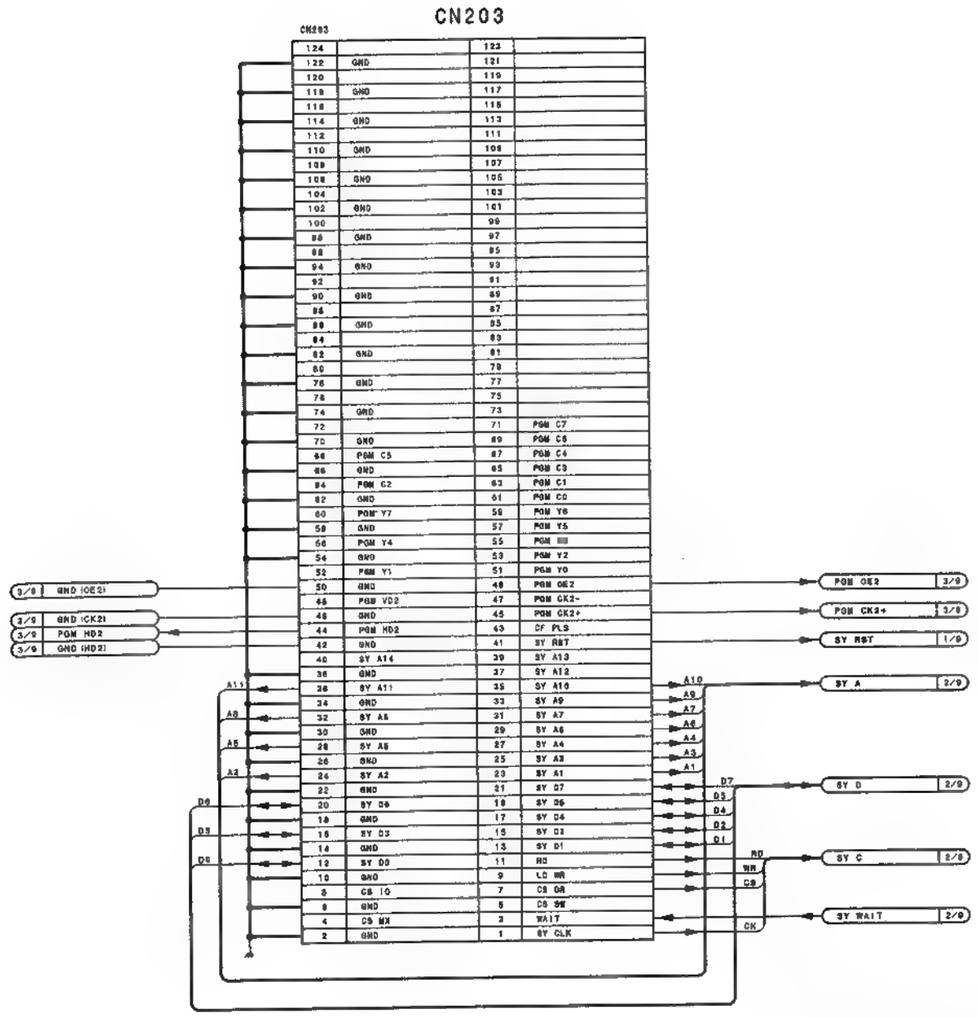

MPU-95 (9/9)

PART NO 1-662-793-12
MODEL ESBK-7041
B-ESBK7041-MPU95-12

2-187 (1) 2-187 (1)

MAIN

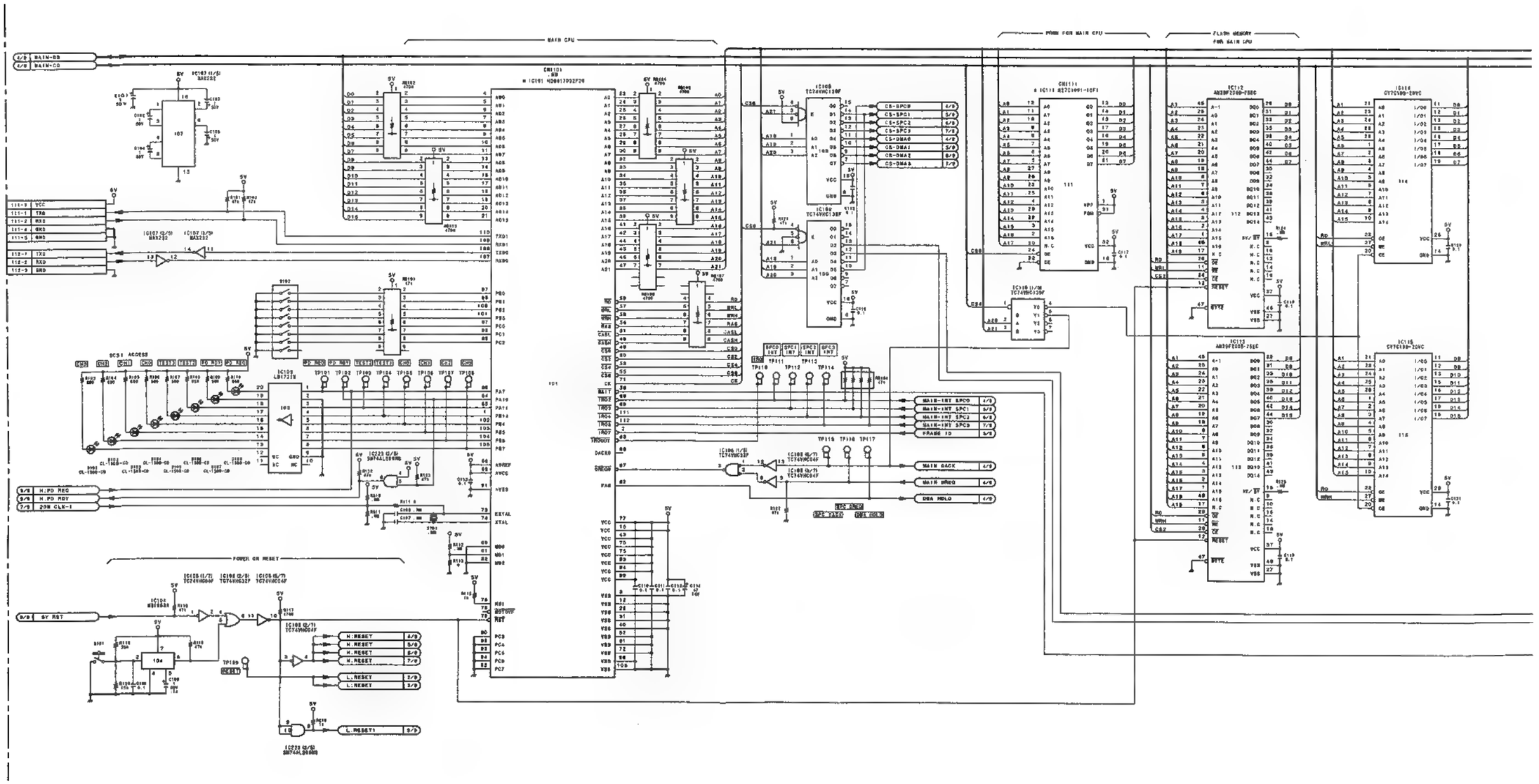

ESBK-7041

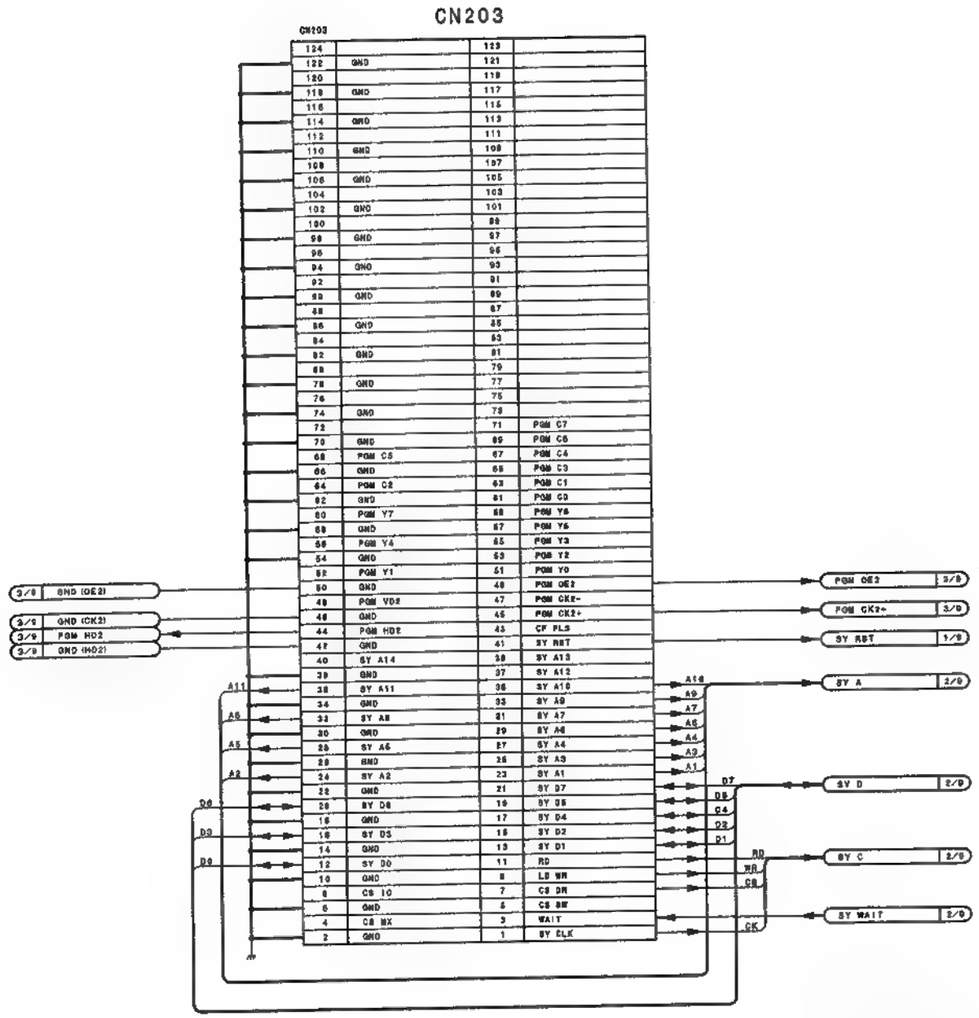

MPU-95 (9/9)
PART NO 1-662-793-11
MODEL ESBK-7041
B-ESBK7041-MPU95-11

AU PB1 1/2

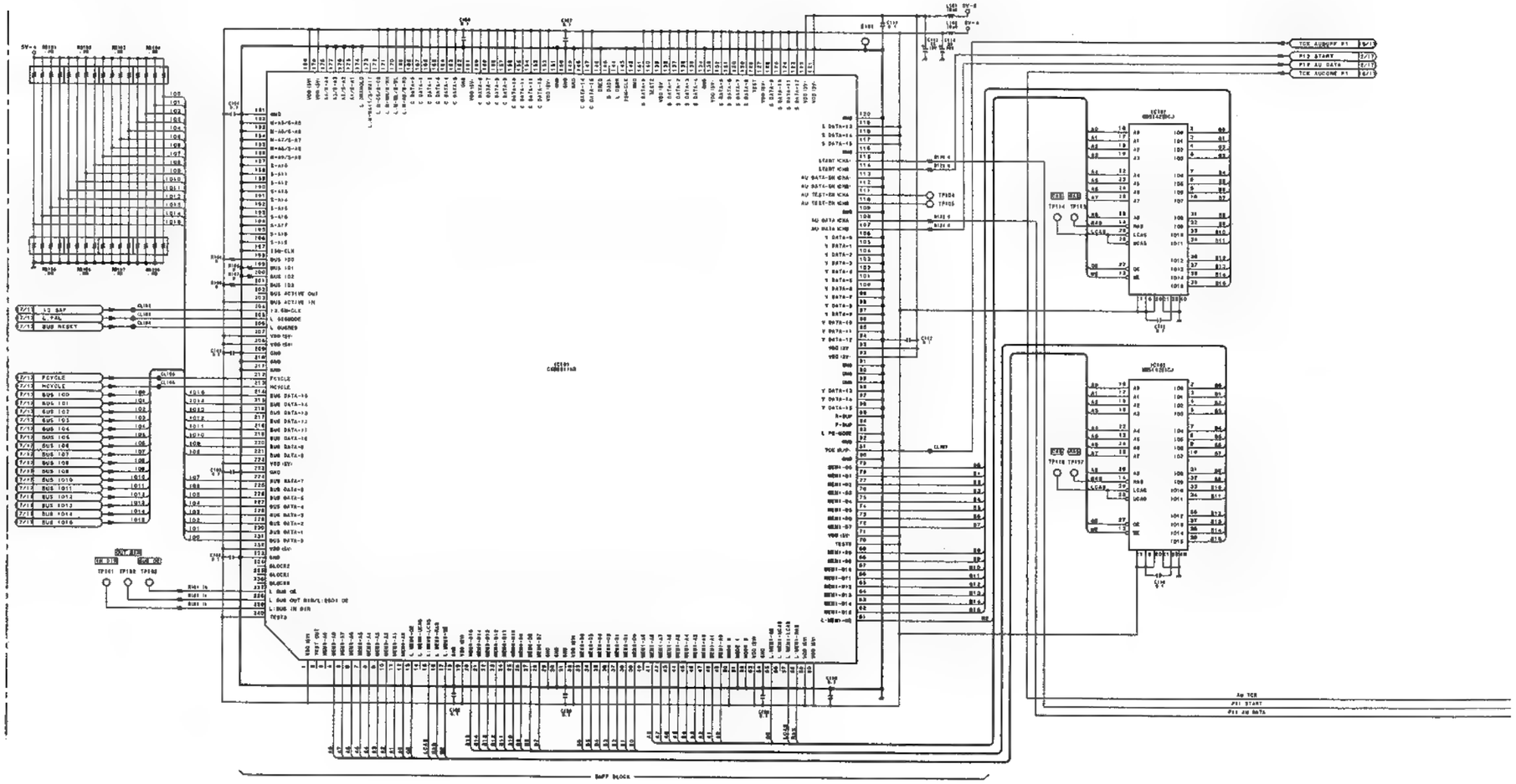

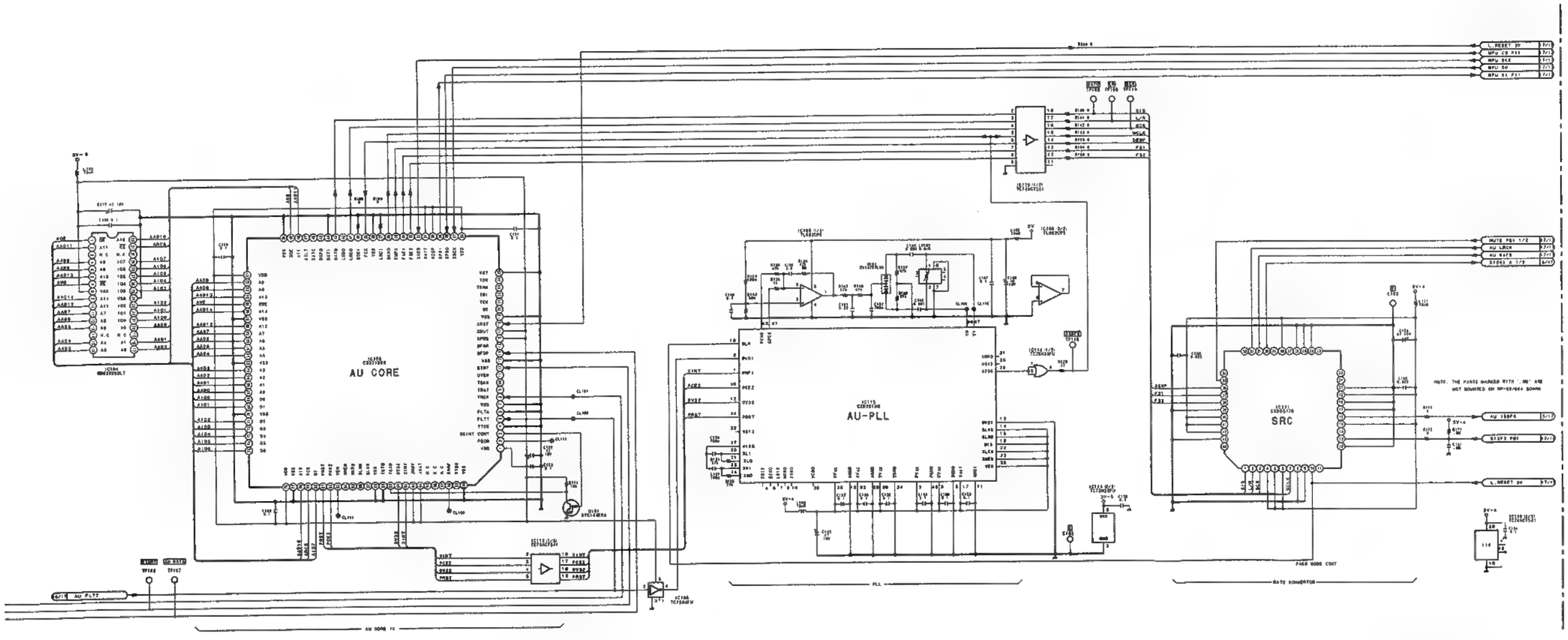

RP-89/89A (1/17)
PART NO 1-662-794-12
MODEL ESBK-7041
B-ESBK7041-RP89-12

AU PB1 3/4

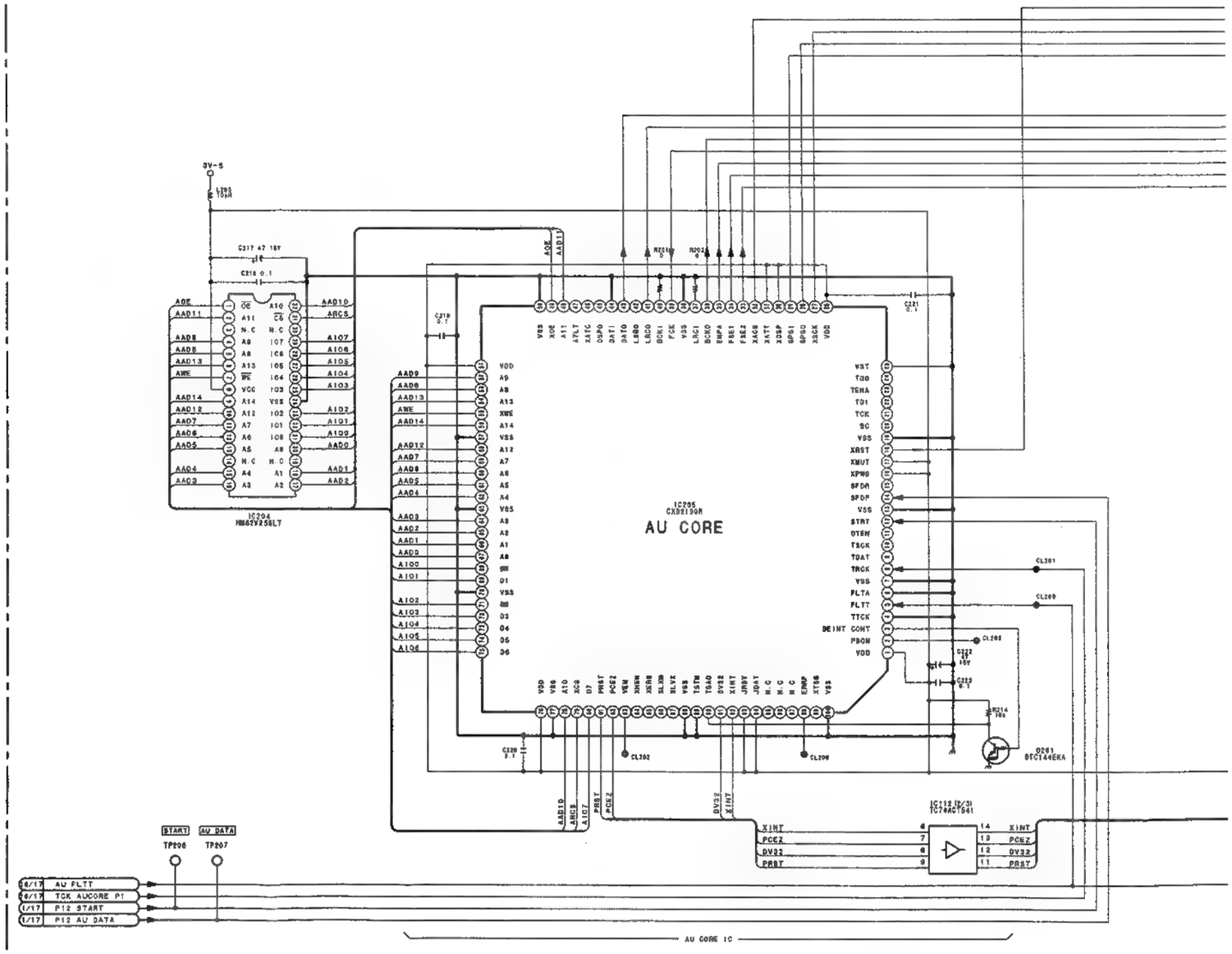
3V-S
IC204
HM62V256LT
IC205
CXD2190R
AU CORE
VDD
VSS
VST
TDO
TEMA
TDI
TCK
BC
XRST
XMUT
XPWR
SFDR
SFDF
STRT
DTEN
TSCK
TDAT
TRCK
FLTA
FLTT
TTCK
DEINT CONT
PBOM
IC218(B/3)
TC74ACT541
XINT
PCEZ
DV32
PRST
START
AU DATA
TP206
TP207
6/17 AU FLTT
6/17 TCK AUCORE P1
1/17 P12 START
1/17 P12 AU DATA
AU CORE IC

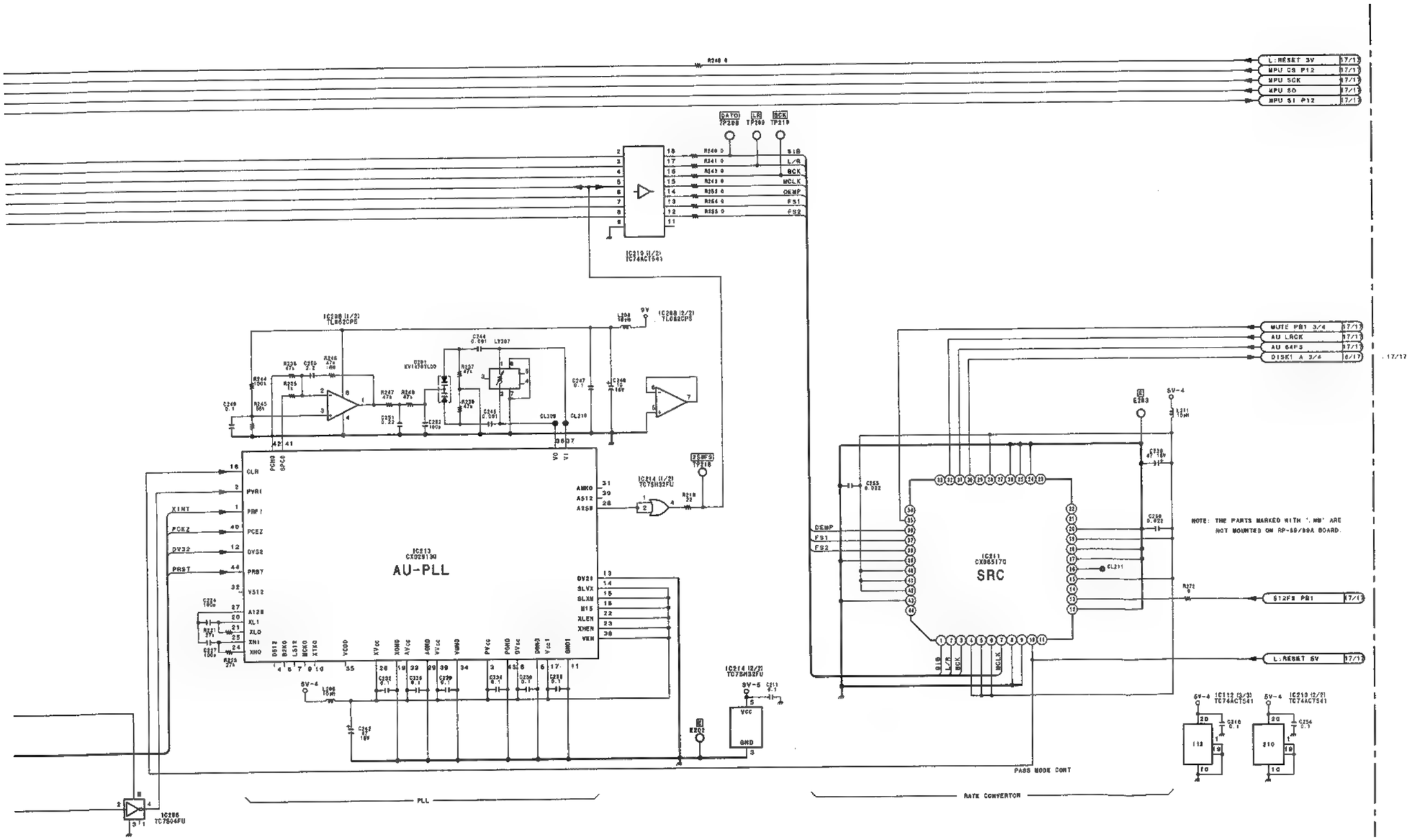

RP-89/89A (2/17)
PART NO 1-662-794-12
MODEL ESBK-7041
8-ESBK7041-RP89-12

AU PB2 1/2

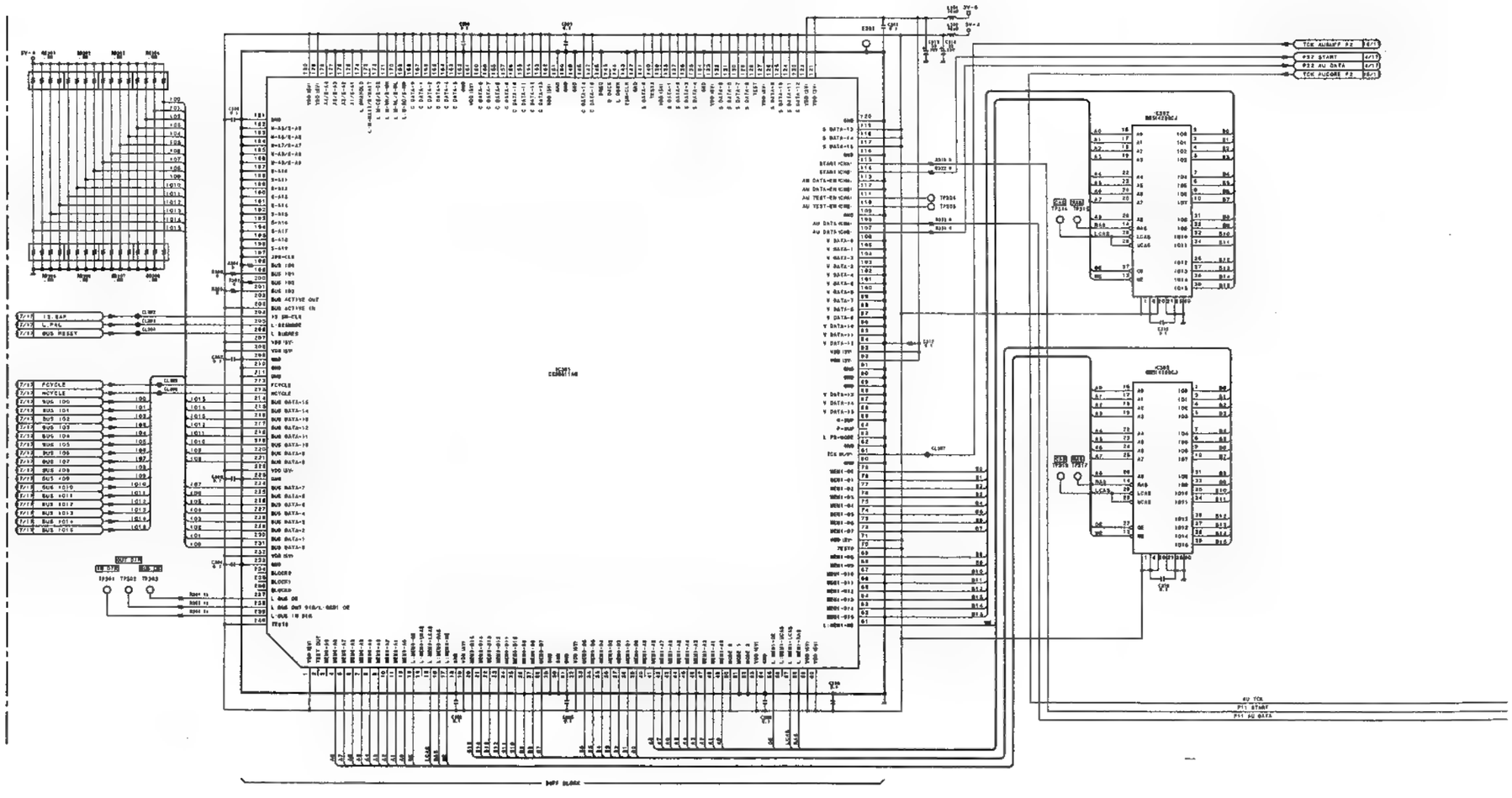

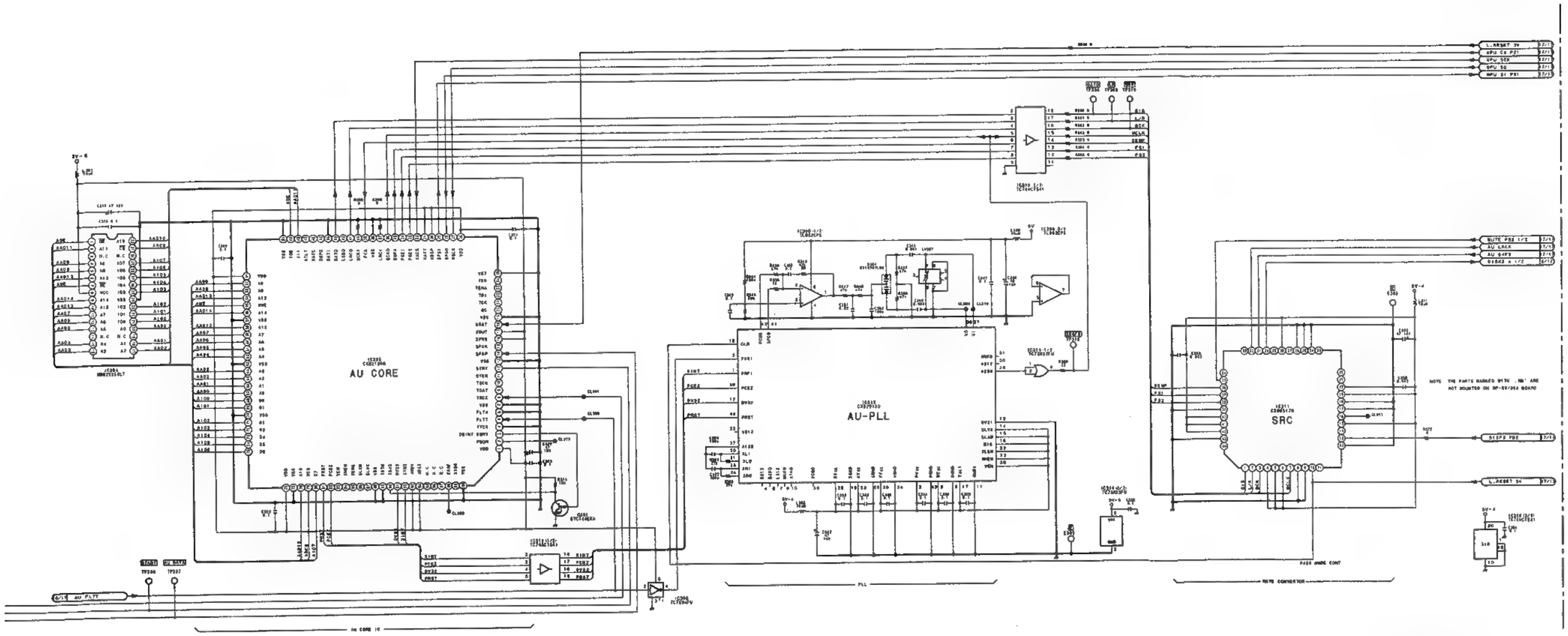

RP-89/89A (3/17)
PART NO 1-662-794-12
MODEL ESBK-7041
B-ESBK7041-RP89-12

AU PB2 3/4

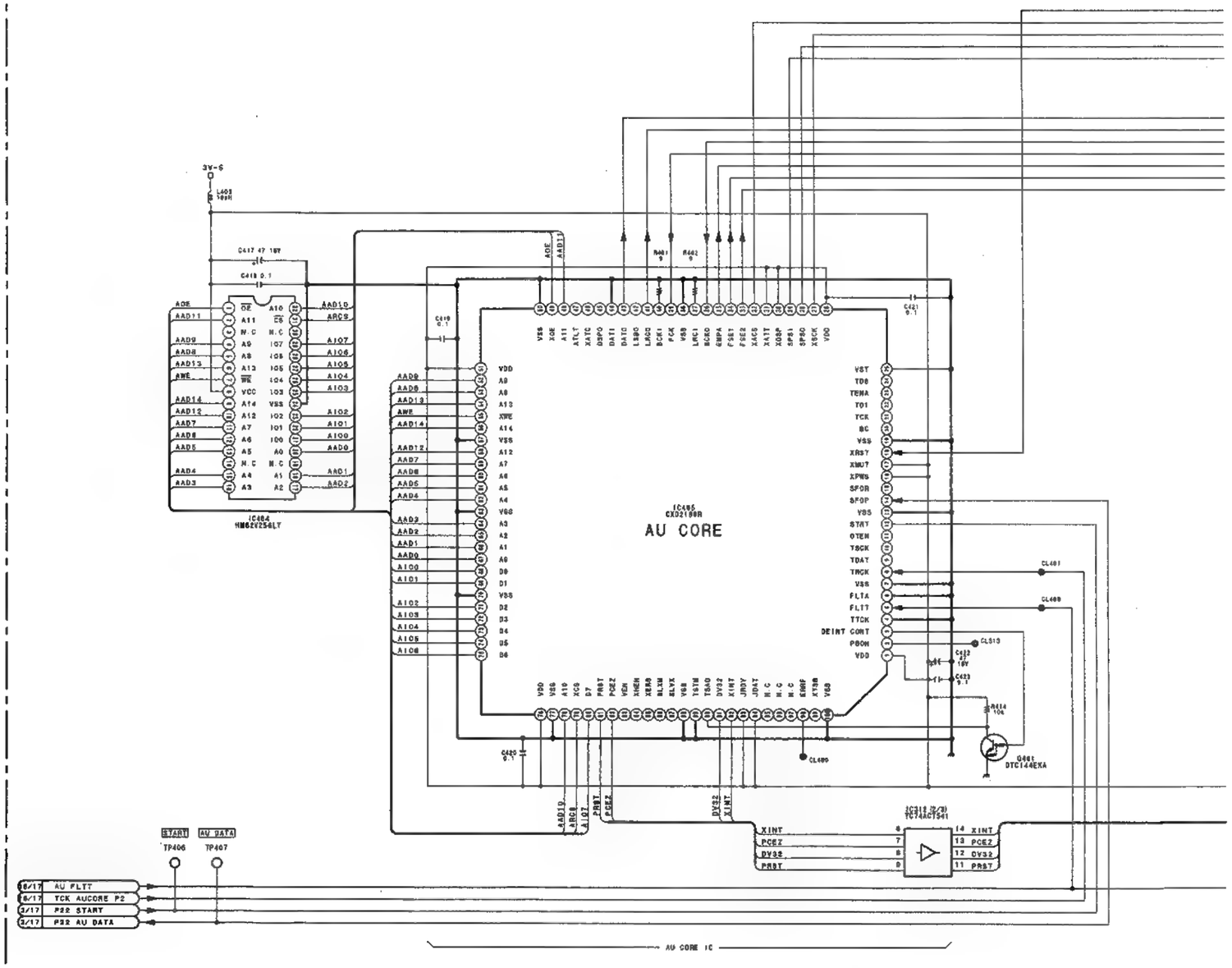

ESBK-7041

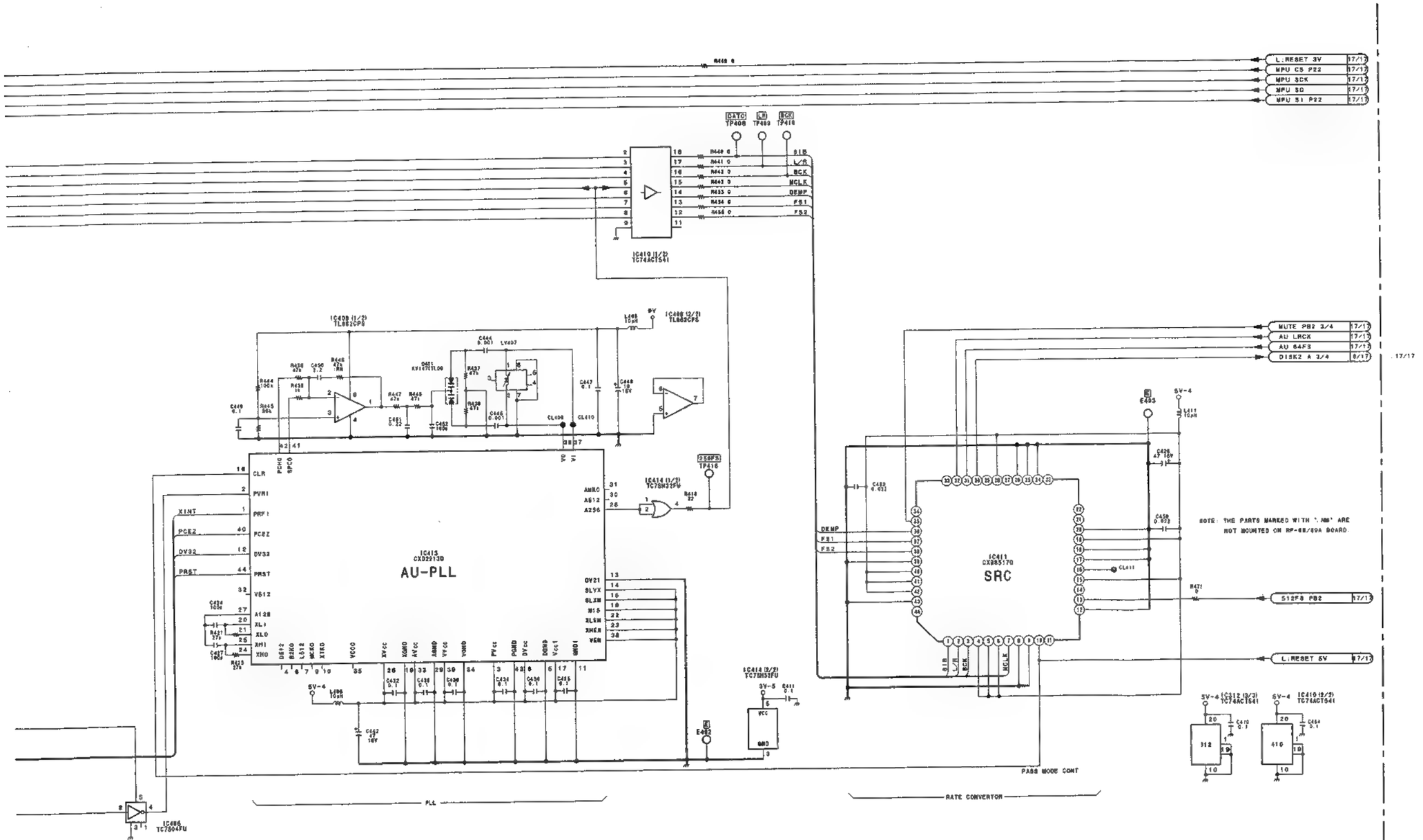

RP-89/89A (4/17)
PART NO 1-662-794-12
MODEL ESBK-7041
B-ESBK7041-RP89-12

AU REC 1/2

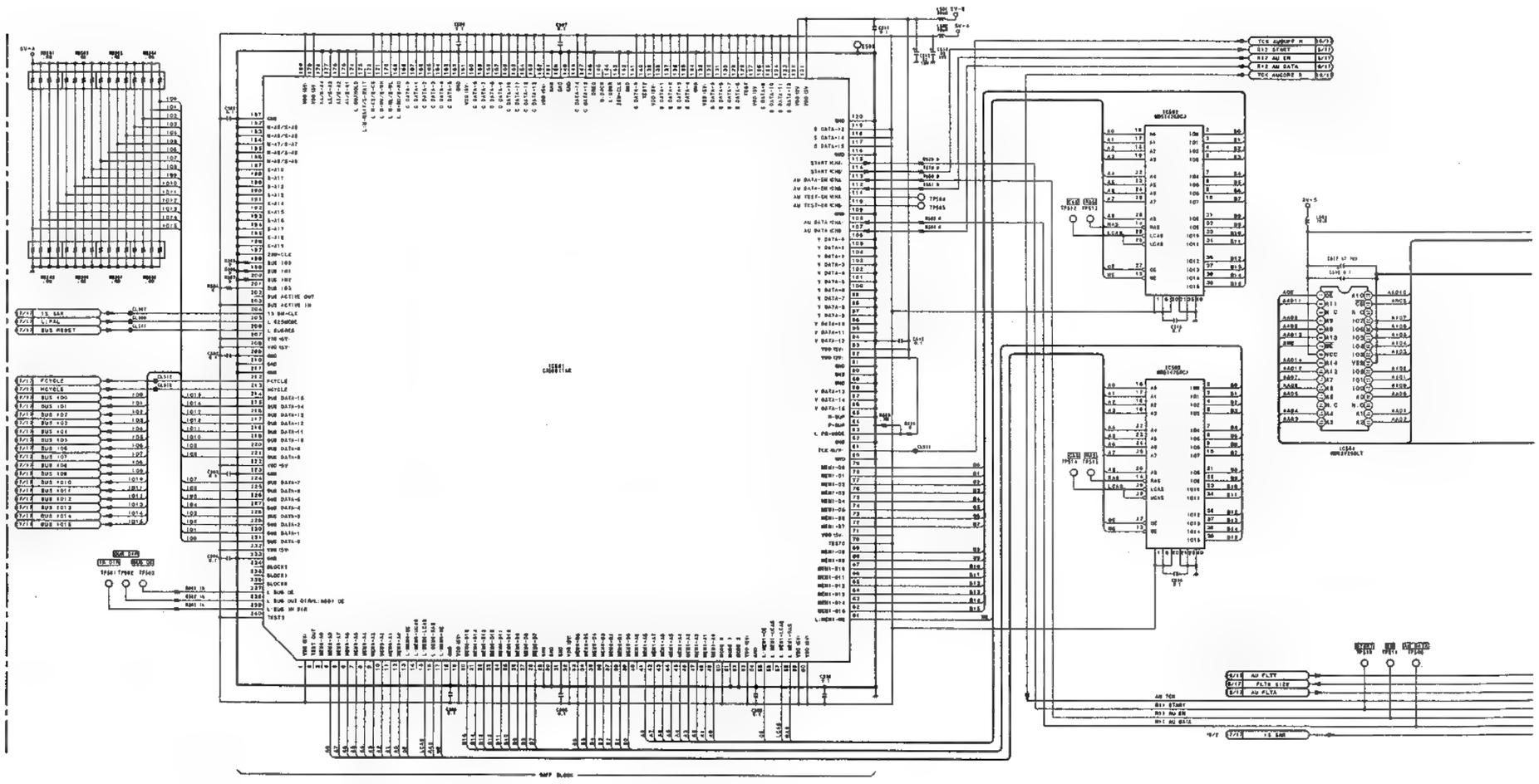

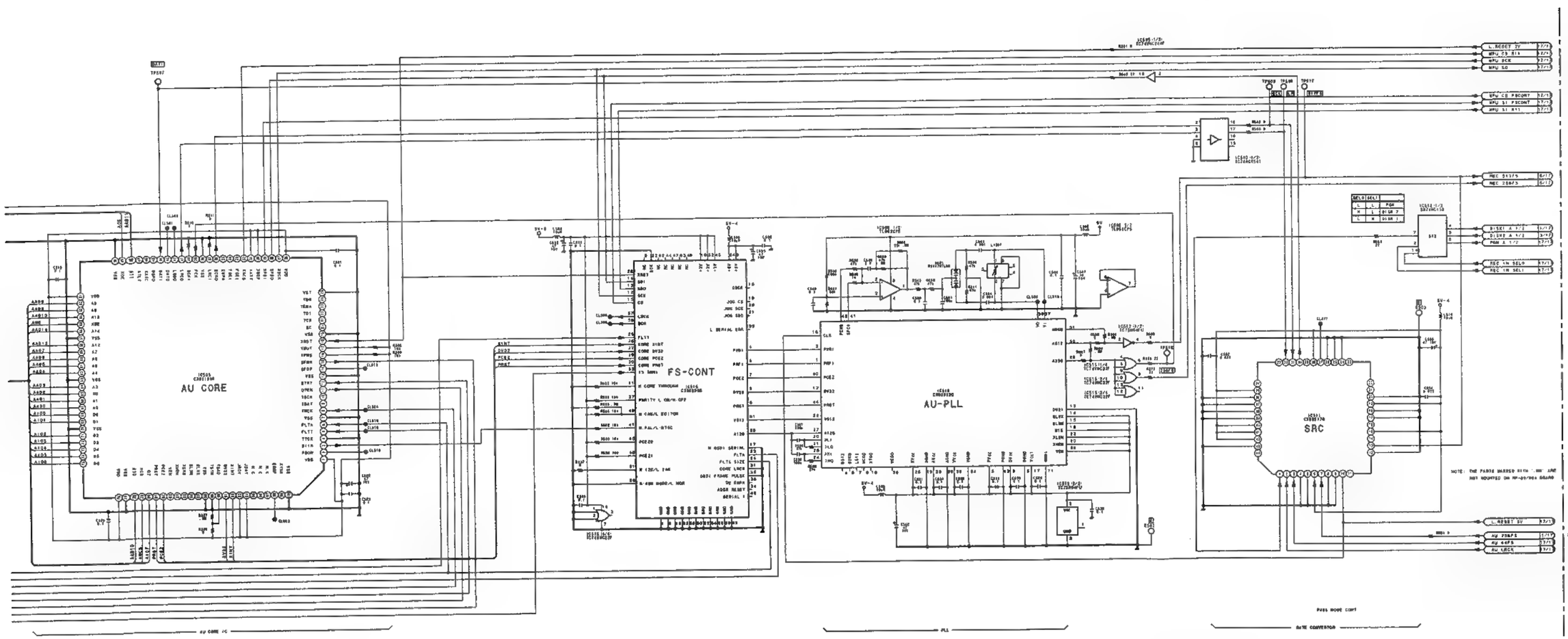

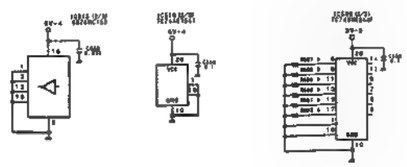

RP-89/89A (5/17)
PART NO 1-662-794-12
MODEL ESBK-7041
B-ESBK7041-RP89-12

AU REC 3/4

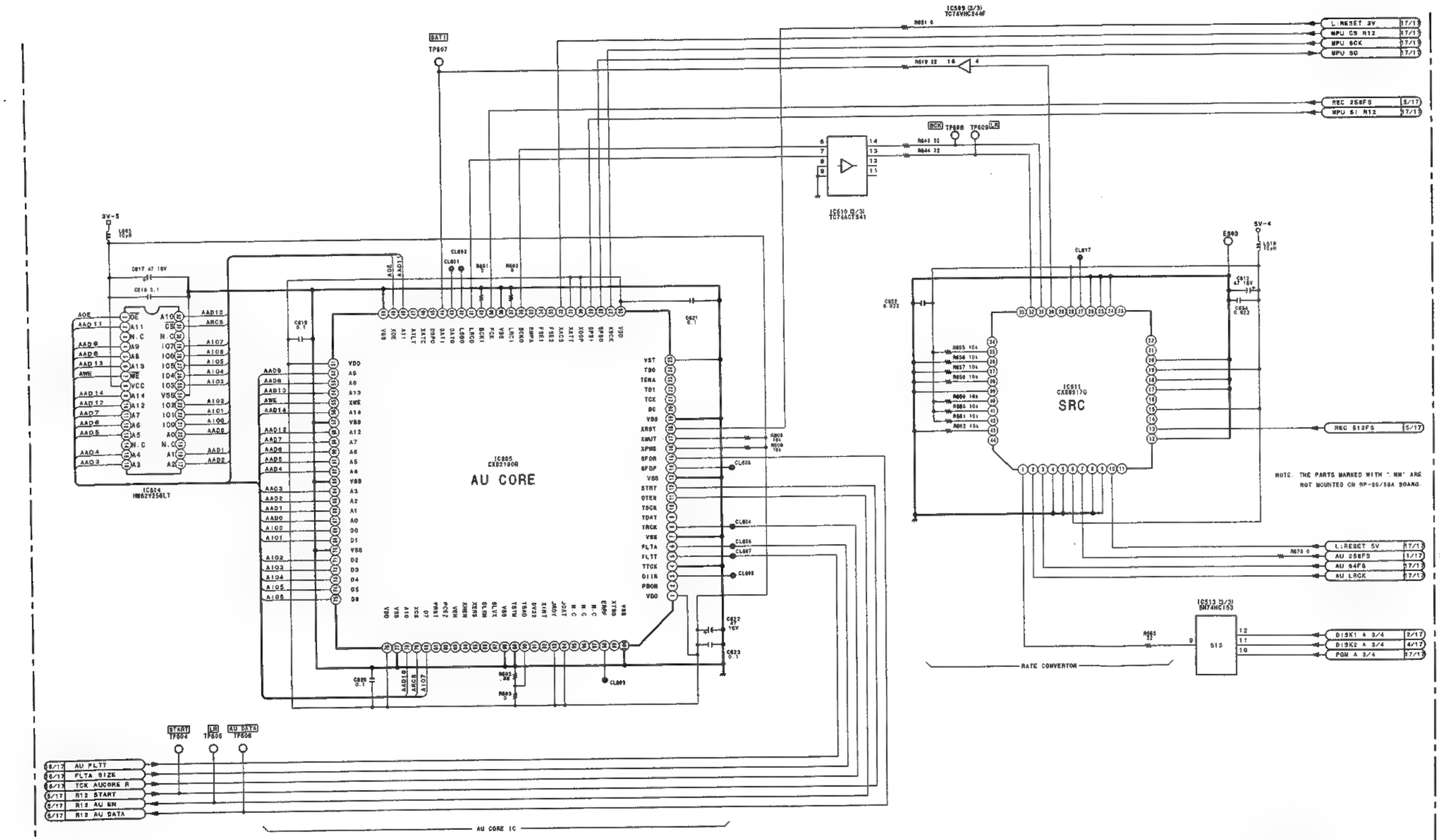

RP-89/89A (6/17)
PART NO 1-662-794-12
MODEL ESBK-7041
B-ESBK7041-RP89-12

REC BUFF

VIDEO REC

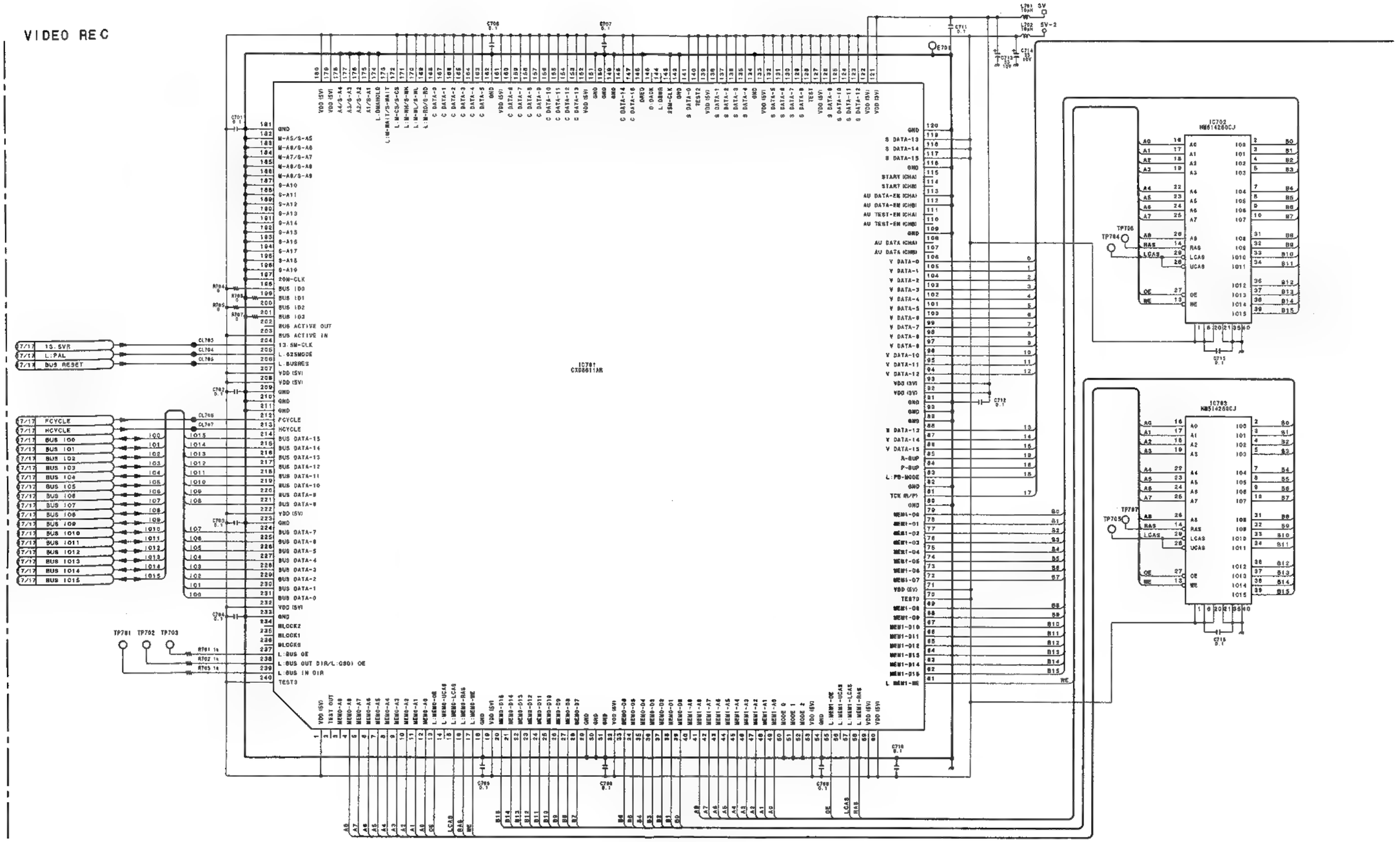

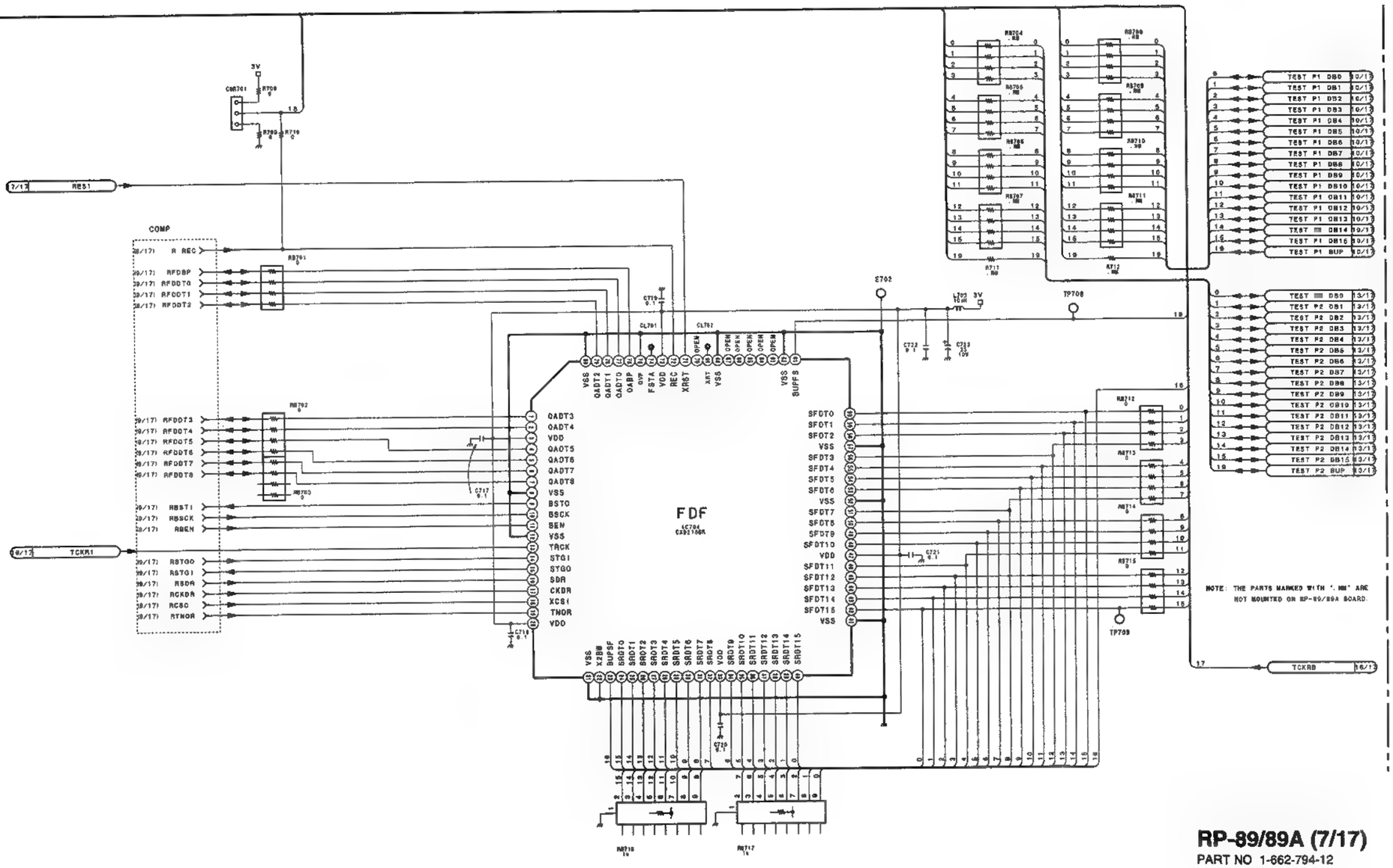

RP-89/89A (7/17)
PART NO 1-662-794-12
MODEL ESBK-7041
9-ESBK7041-RP89-12

REC BLK

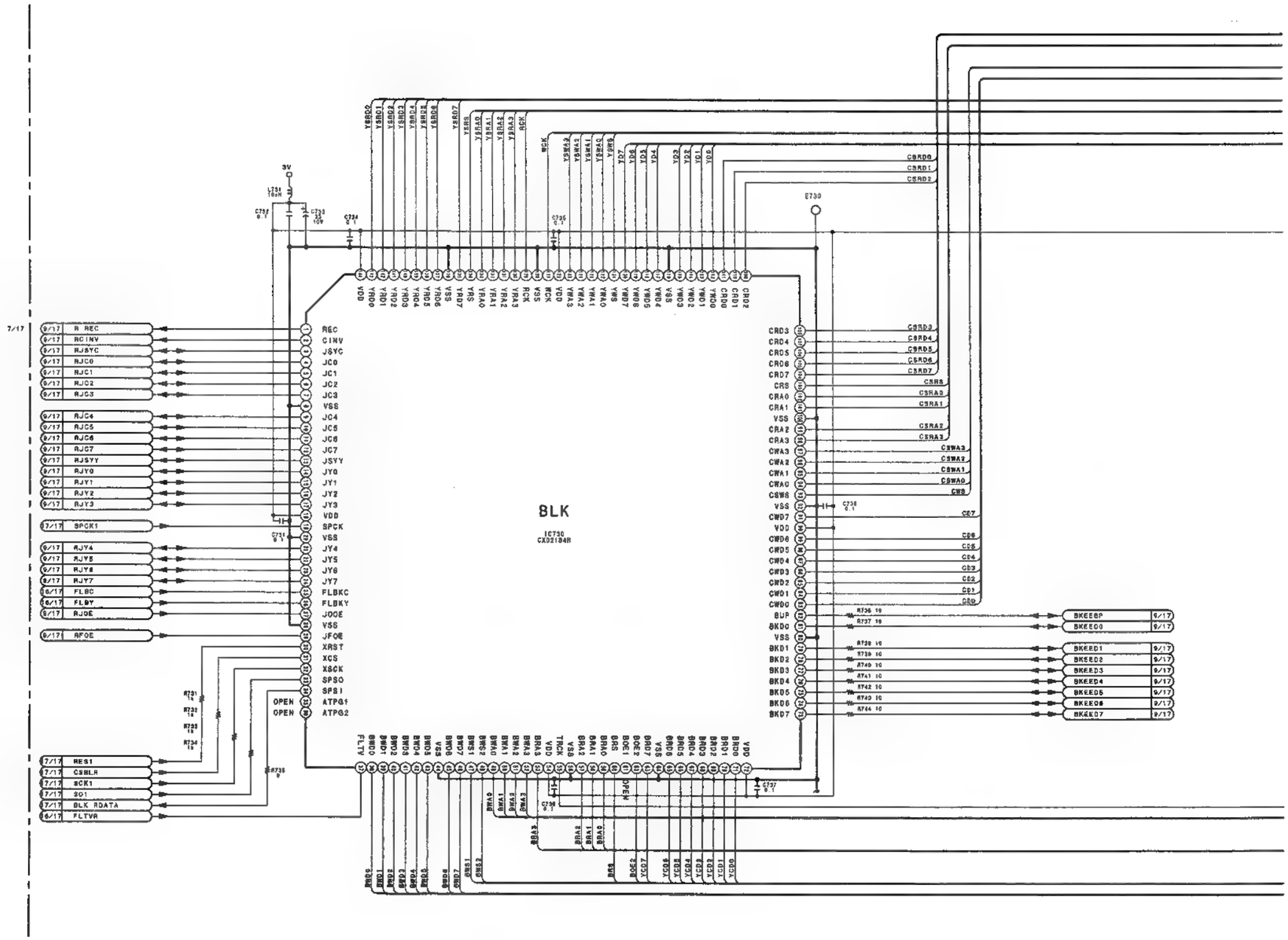

ESBK-7041

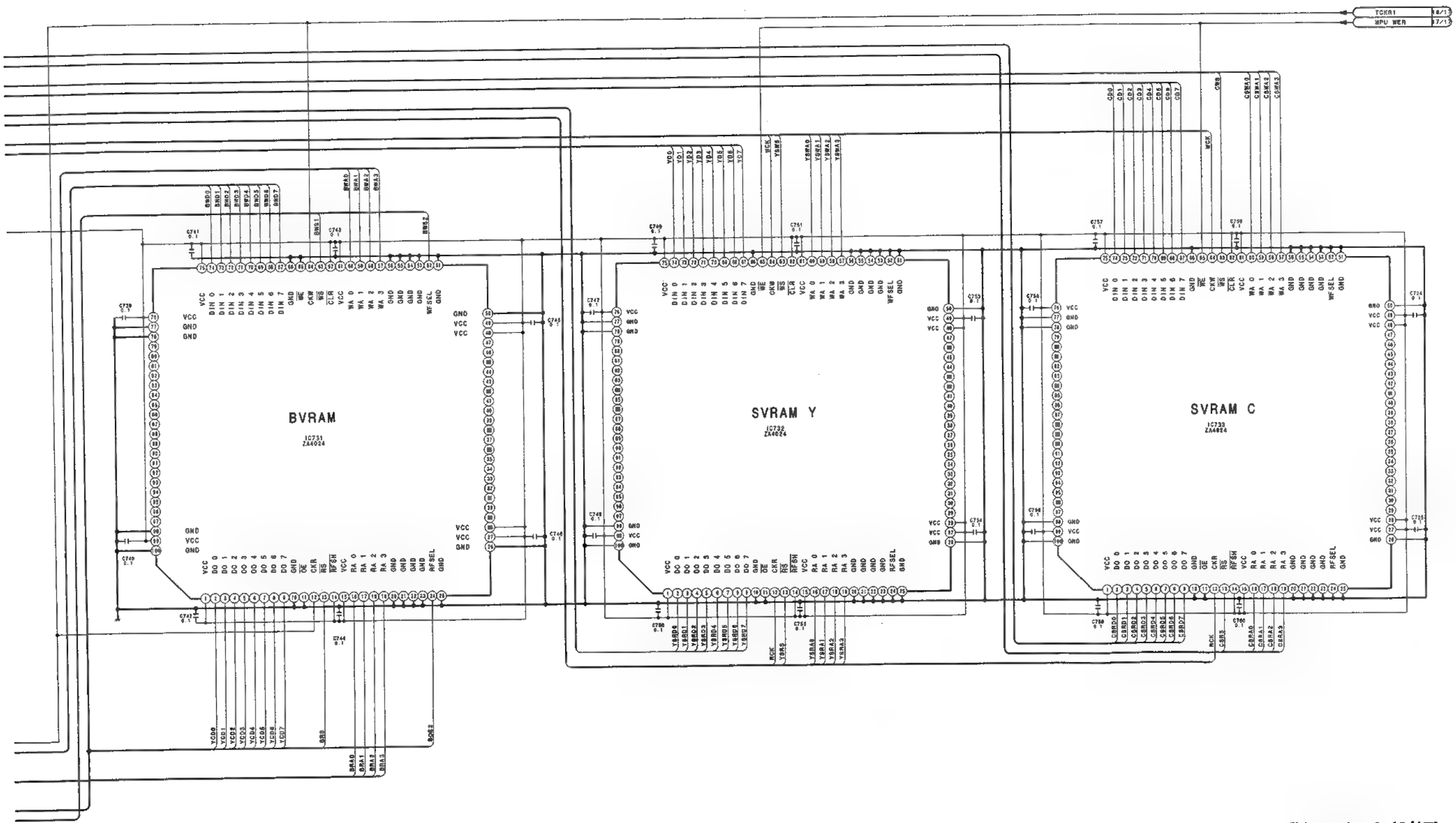

RP-89/89A (8/17)
PART NO 1-662-794-12
MODEL ESBK-7041
B-ESBK7041-RP89-12

REC NFIL

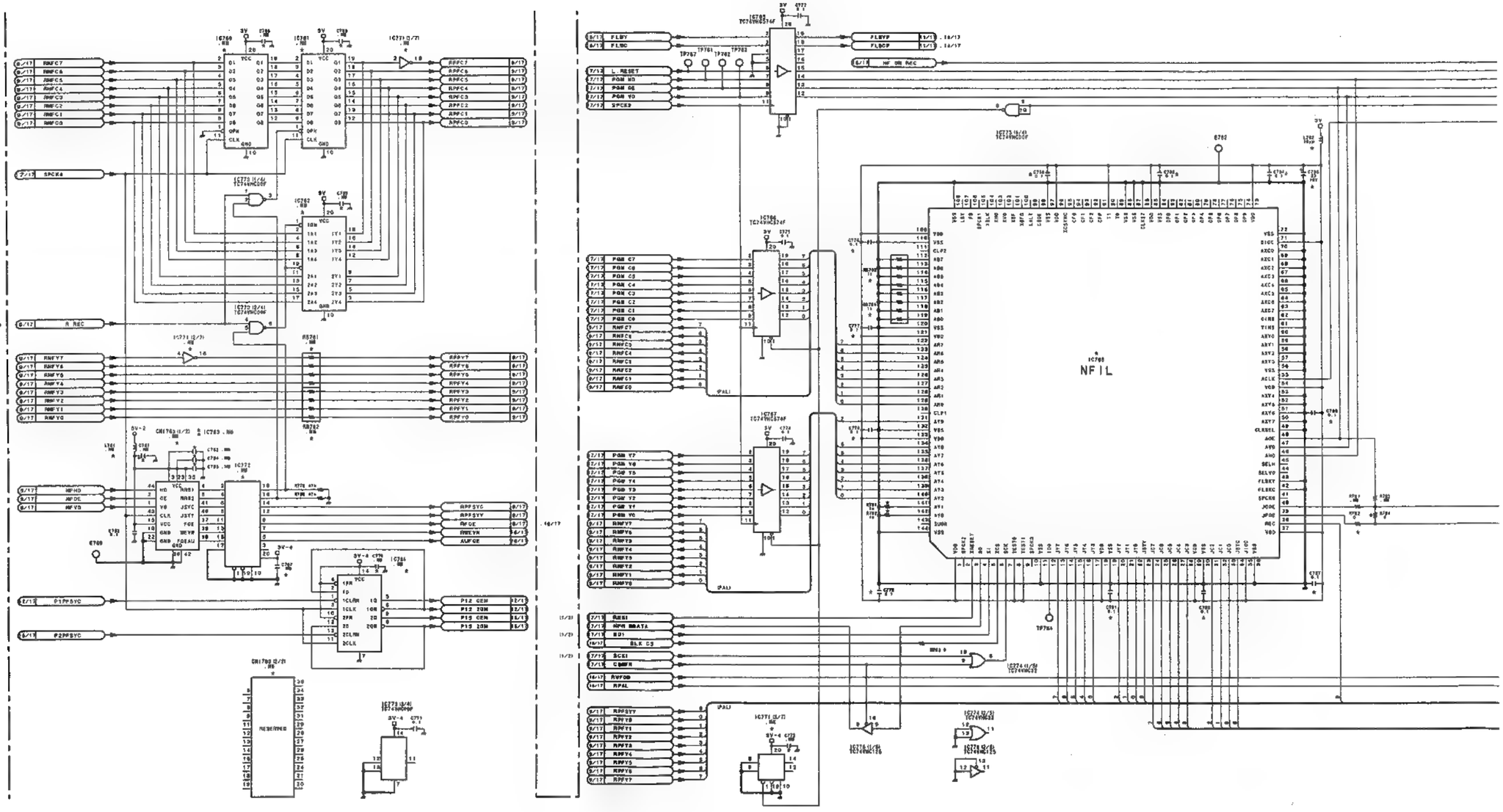

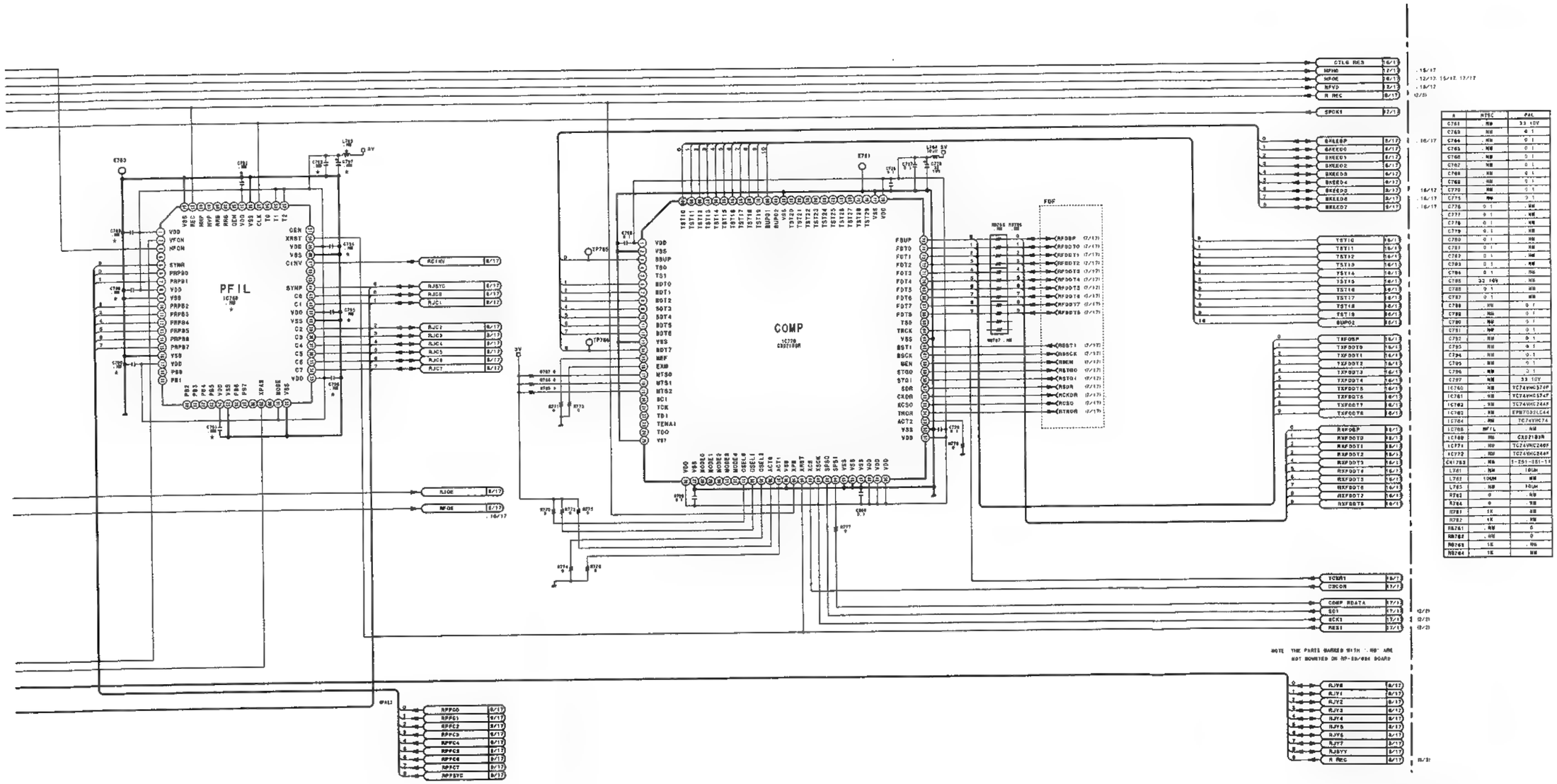

RP-89/89A (9/17)
PART NO 1-662-794-12
MODEL ESBK-7041
B-ESBK7041-RP89-12

PB1 BUFF

VIDEO PB1

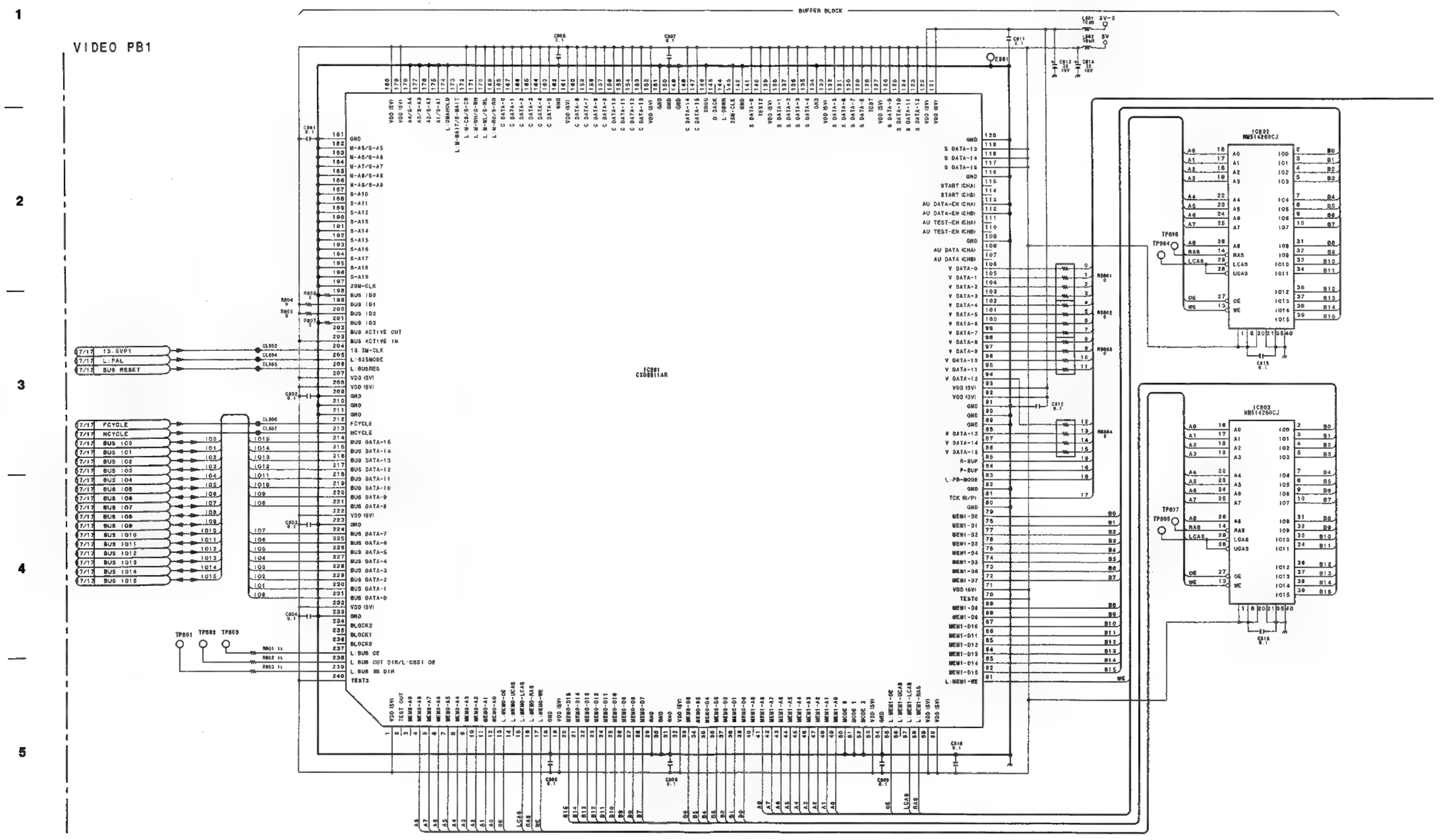

ESBK-7041

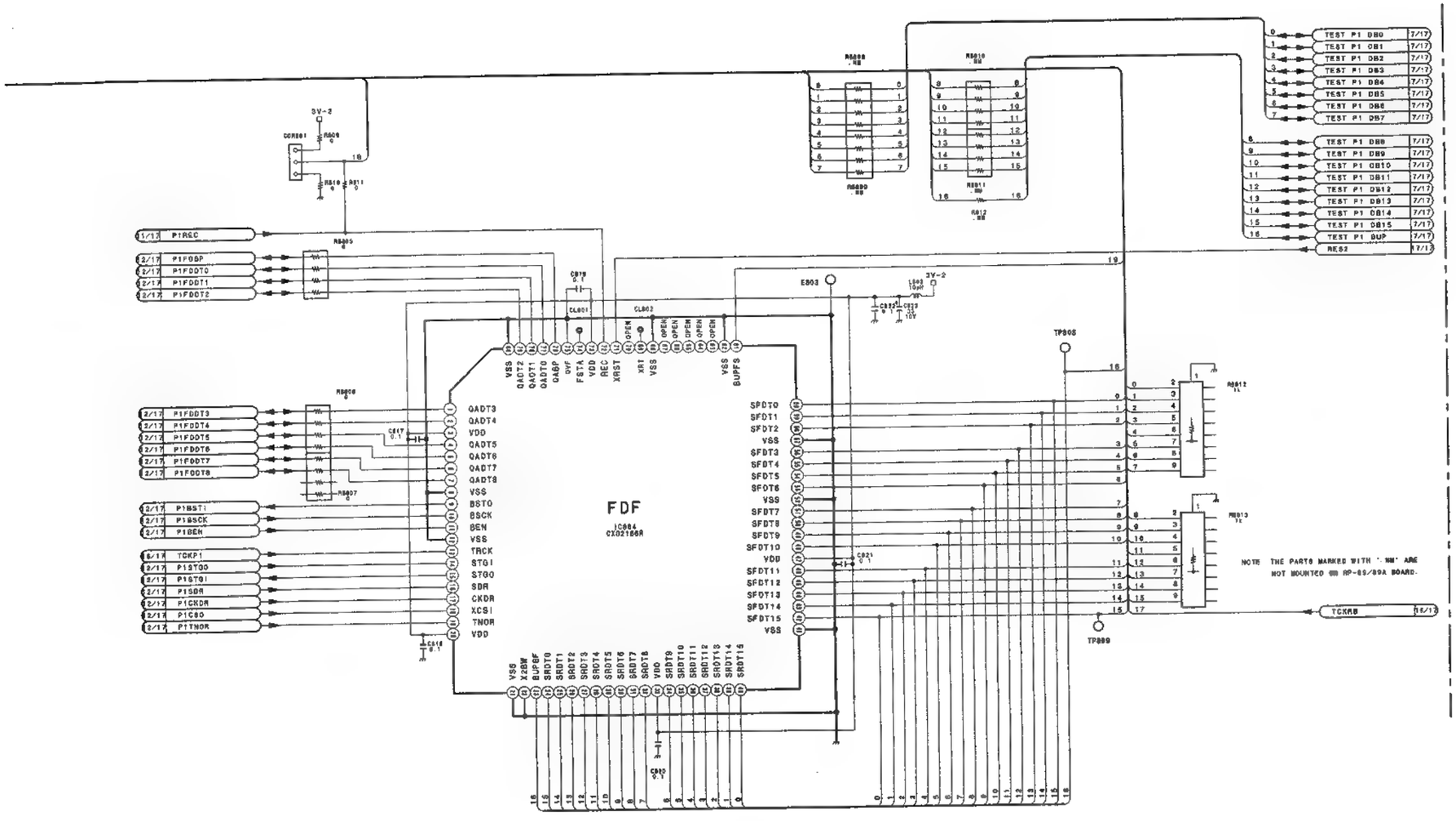

RP-89/89A (10/17)
PART NO 1-662-794-12
MODEL ESBK-7041
B-ESBK7041-RP89-12

PB1 BLK

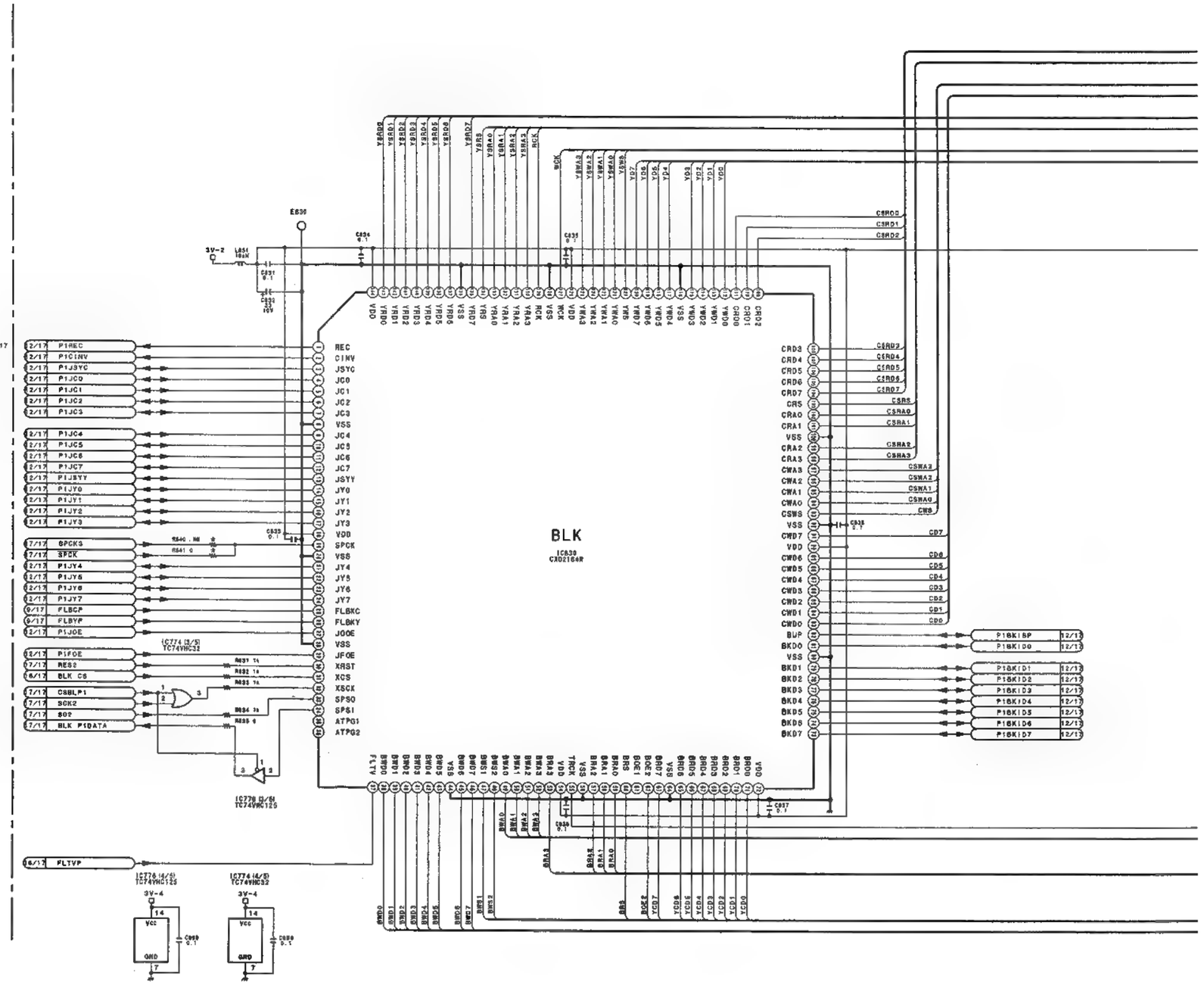

2-208 (1) 2-208 (1)

ESBK-7041

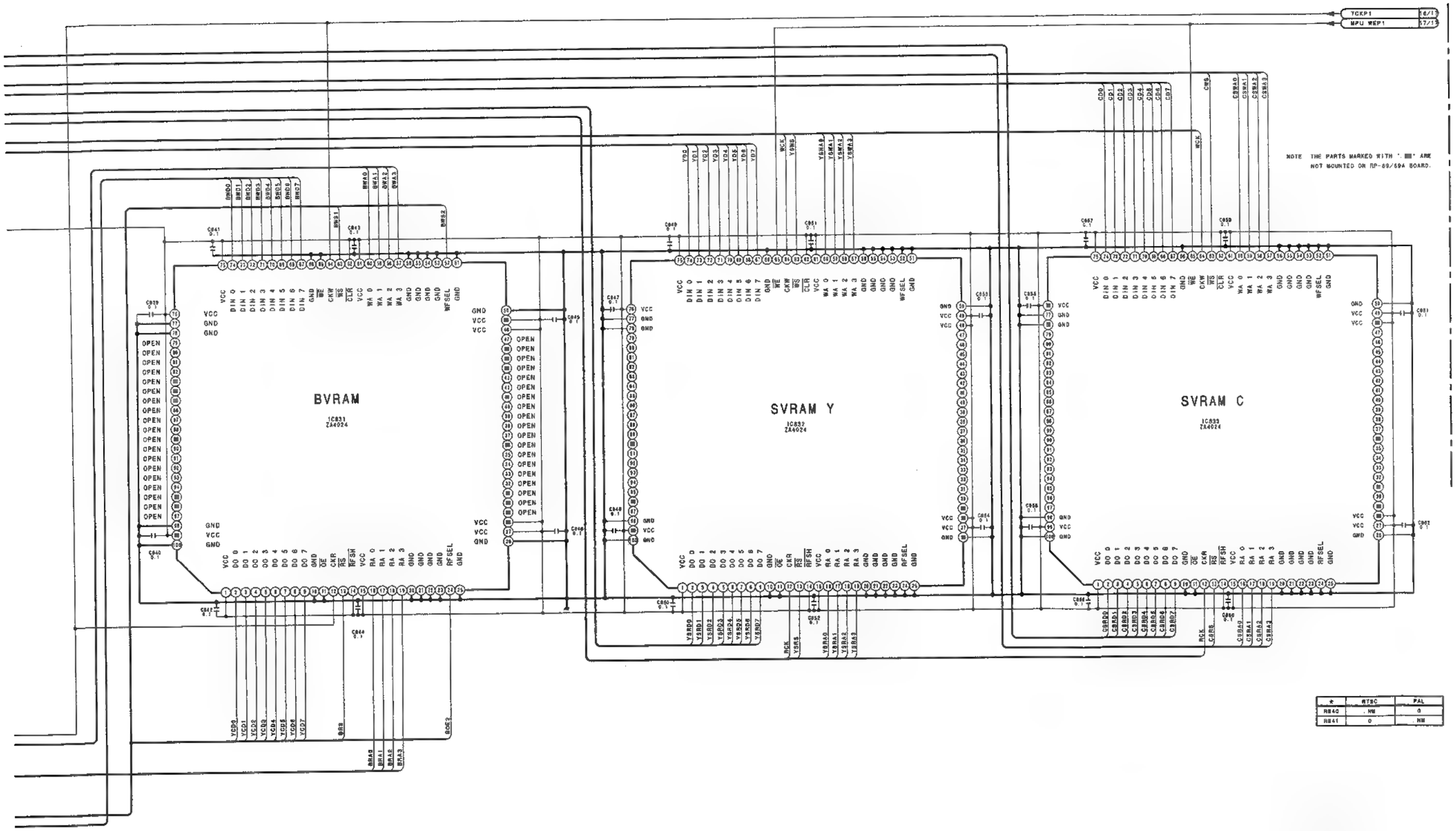

RP-89/89A (11/17)
PART NO 1-662-794-12
MODEL ESBK-7041
B-ESBK7041-RP89-12

PB1 NFIL

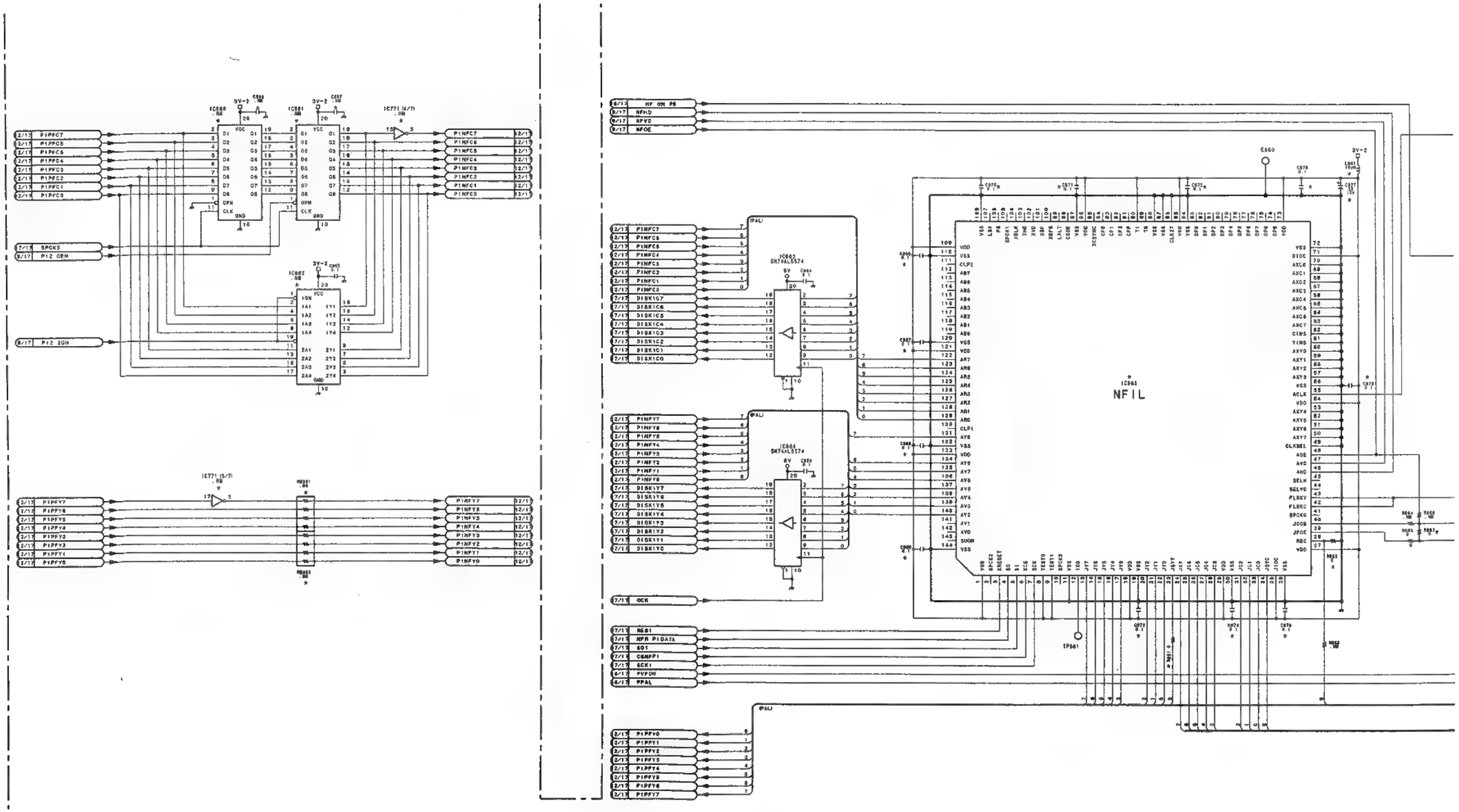

2-210 (1) 2-210 (1)

ESBK-7041

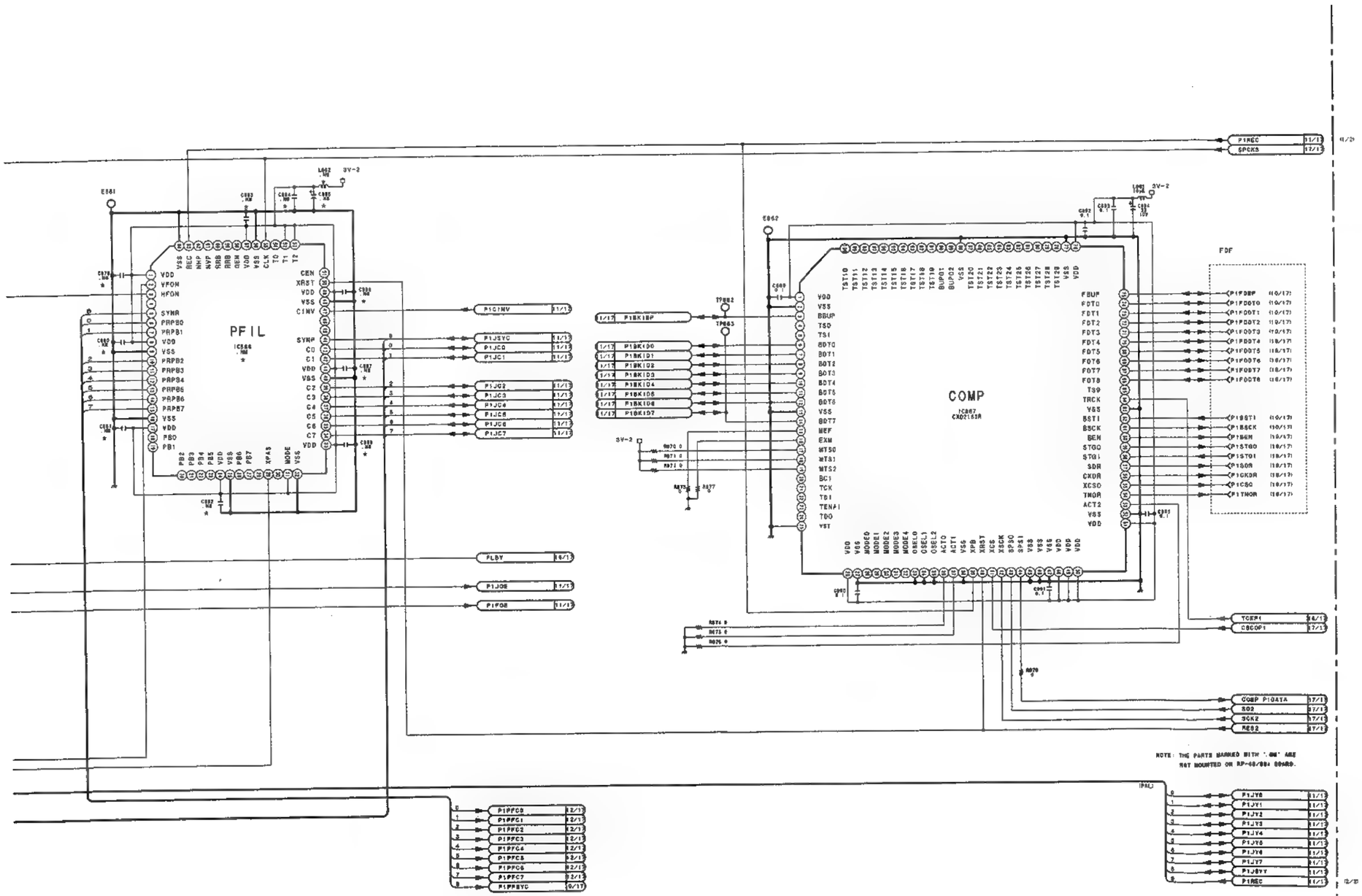

*	NTSC	PAL
C866	0.1	NS
C867	0.1	NS
C868	0.1	NS
C869	0.1	NS
C870	0.1	NS
C871	0.1	NS
C872	0.1	NS
C873	0.1	NS
C874	0.1	NS
C875	0.1	NS
C876	0.1	NS
C877	33 16V	NS
C878	0.1	NS
C879	NS	0.1
C880	NS	0.1
C881	NS	0.1
C882	NS	0.1
C883	NS	0.1
C884	NS	0.1
C885	NS	33 16V
C886	NS	0.1
C887	NS	0.1
C888	NS	0.1
C889	NS	0.1
IC860	NS	TC74VHC574F
IC861	NS	TC74VHC574F
IC862	NS	TC74VHC244F
IC865	MFIL	NS
IC866	NS	CXD2163R
L861	10UH	NS
L862	NS	10UH
R861	0	NS
R862	0	NS
R865	0	NS
R867	0	NS
RB861	NS	0
RB862	NS	0

RP-89/89A (12/17)
PART NO 1-662-794-12
MODEL ESBK-7041
B-ESBK7041-RP89-12

PB2 BUFF

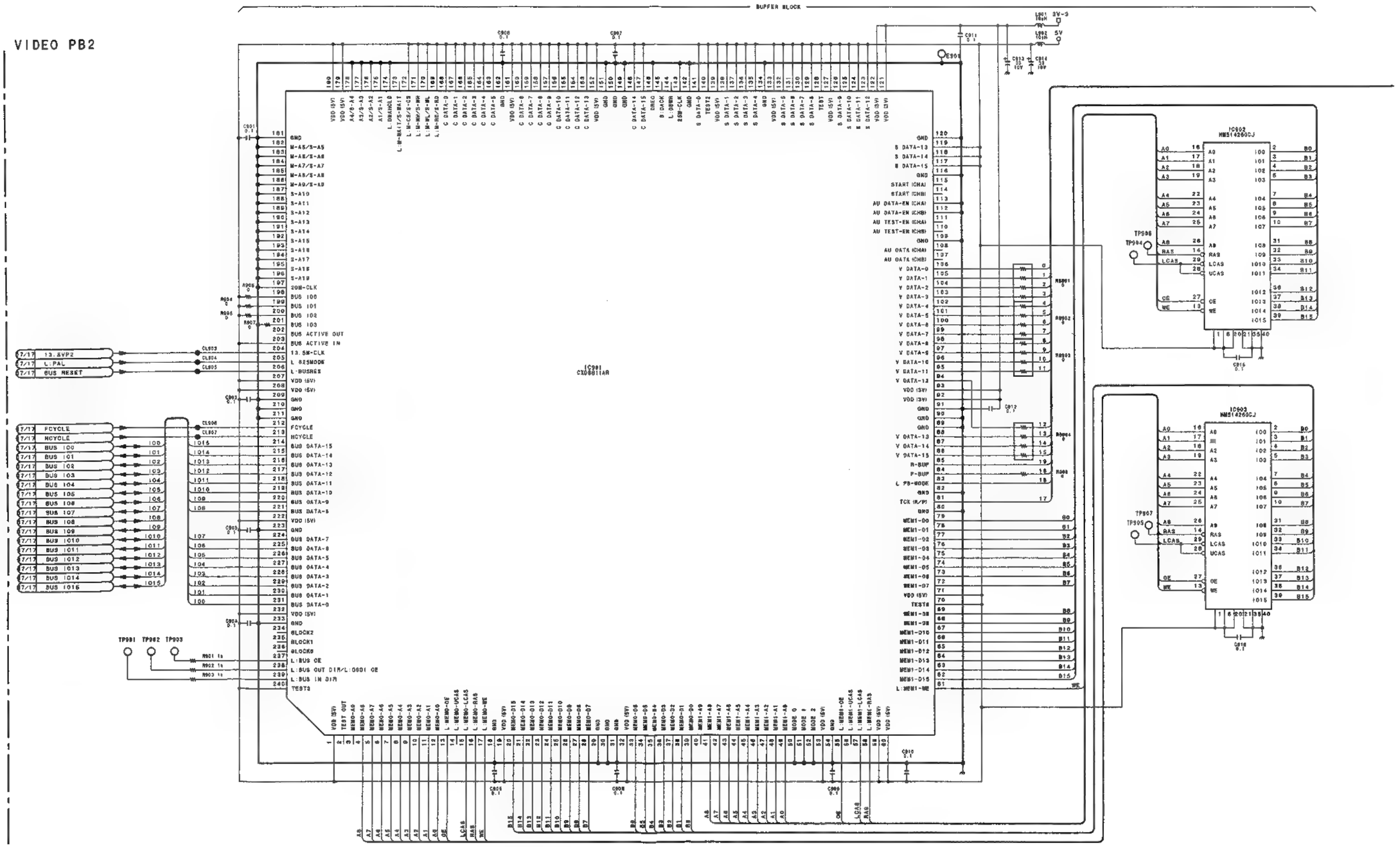

2-212 (1) 2-212 (1)

ESBK-7041

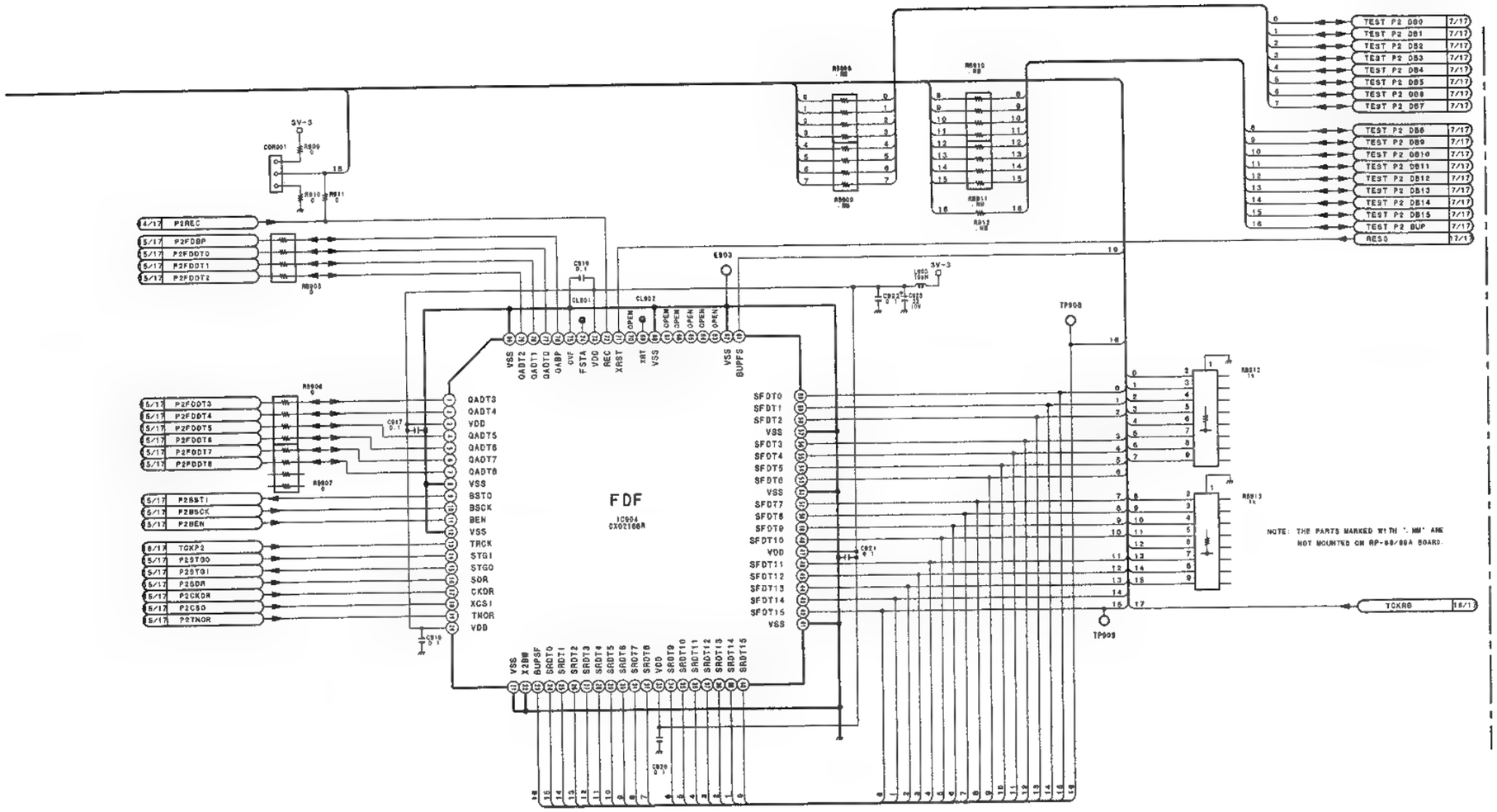

RP-89/89A (13/17)
PART NO 1-662-794-12
MODEL ESBK-7041
B-ESBK7041-RP89-12

PB2 BLK

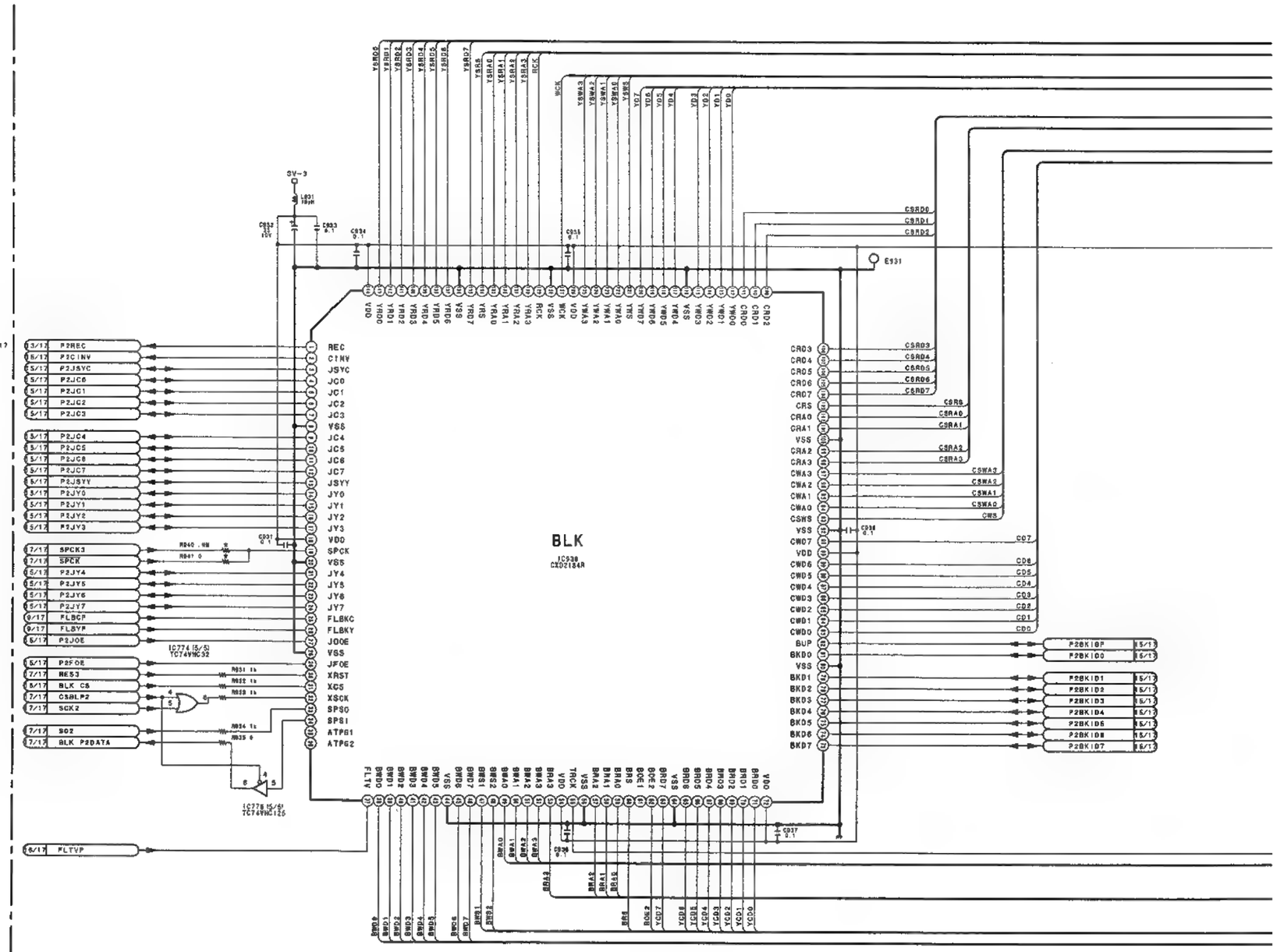
BLK
IC930
CXD2184R
IC774 (5/5)
TC74VHC32
IC778 (5/5)
TC74VHC125
REC
CINV
JSYC
JC0
JC1
JC2
JC3
VSS
JC4
JC5
JC6
JC7
JSYY
JY0
JY1
JY2
JY3
VDD
SPCK
VSS
JY4
JY5
JY6
JY7
FLBKC
FLBKY
JOOE
VSS
JFOE
XRST
XCS
XSCK
SPS0
SPS1
ATPG1
ATPG2
P2REC
P2CINV
P2JSYC
P2JC0
P2JC1
P2JC2
P2JC3
P2JC4
P2JC5
P2JC6
P2JC7
P2JSYY
P2JY0
P2JY1
P2JY2
P2JY3
SPCK3
SPCK
P2JY4
P2JY5
P2JY6
P2JY7
FLBCP
FLSYP
P2JOE
P2FOE
RES3
BLK CS
CSBLP2
SCK2
SO2
BLK P2DATA
FLTVP
P2BKID0
P2BKID1
P2BKID2
P2BKID3
P2BKID4
P2BKID5
P2BKID6
P2BKID7

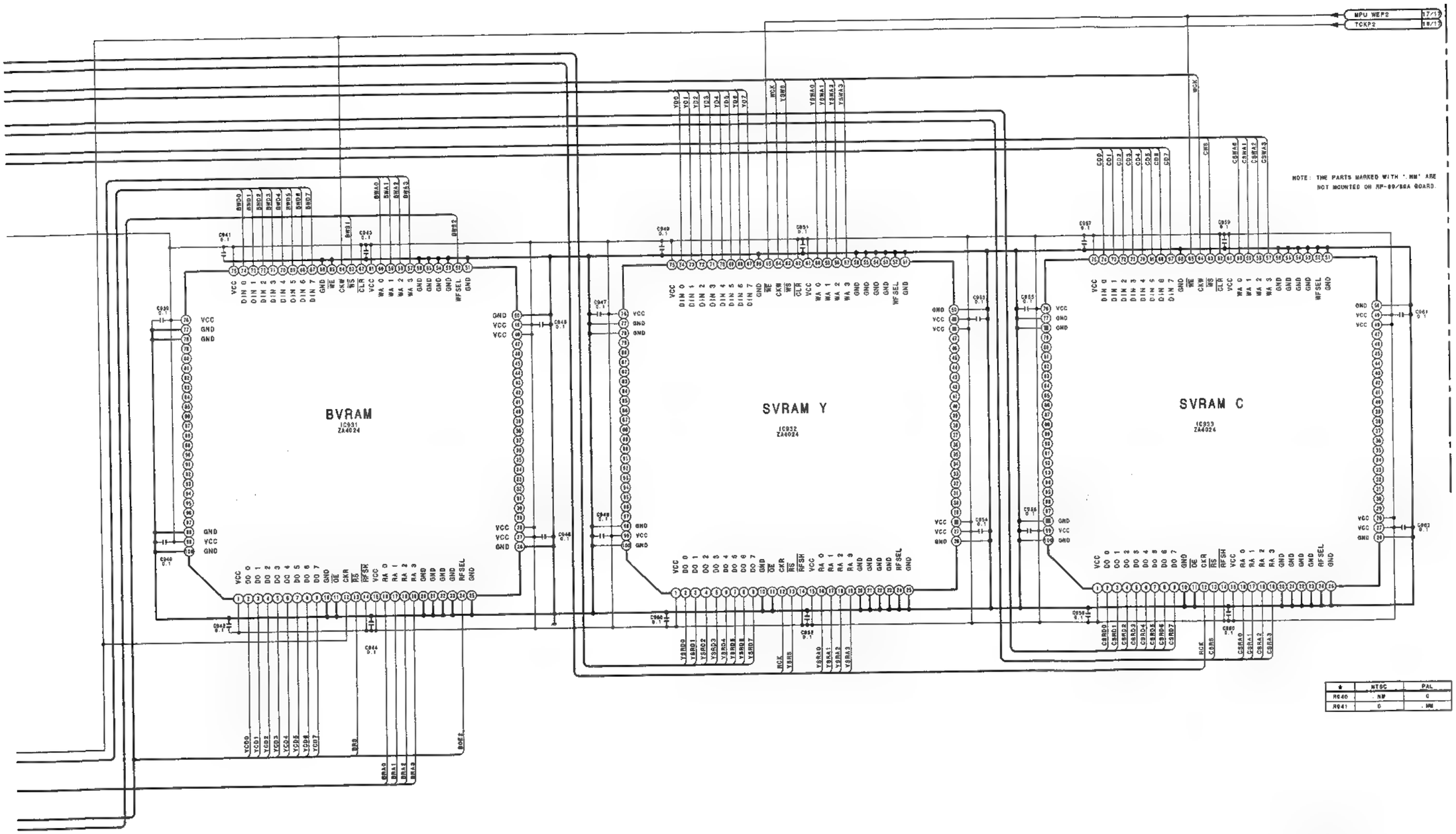

RP-89/89A (14/17)
PART NO 1-662-794-12
MODEL ESBK-7041
B-ESBK7041-RP89-12

PB2 NFIL

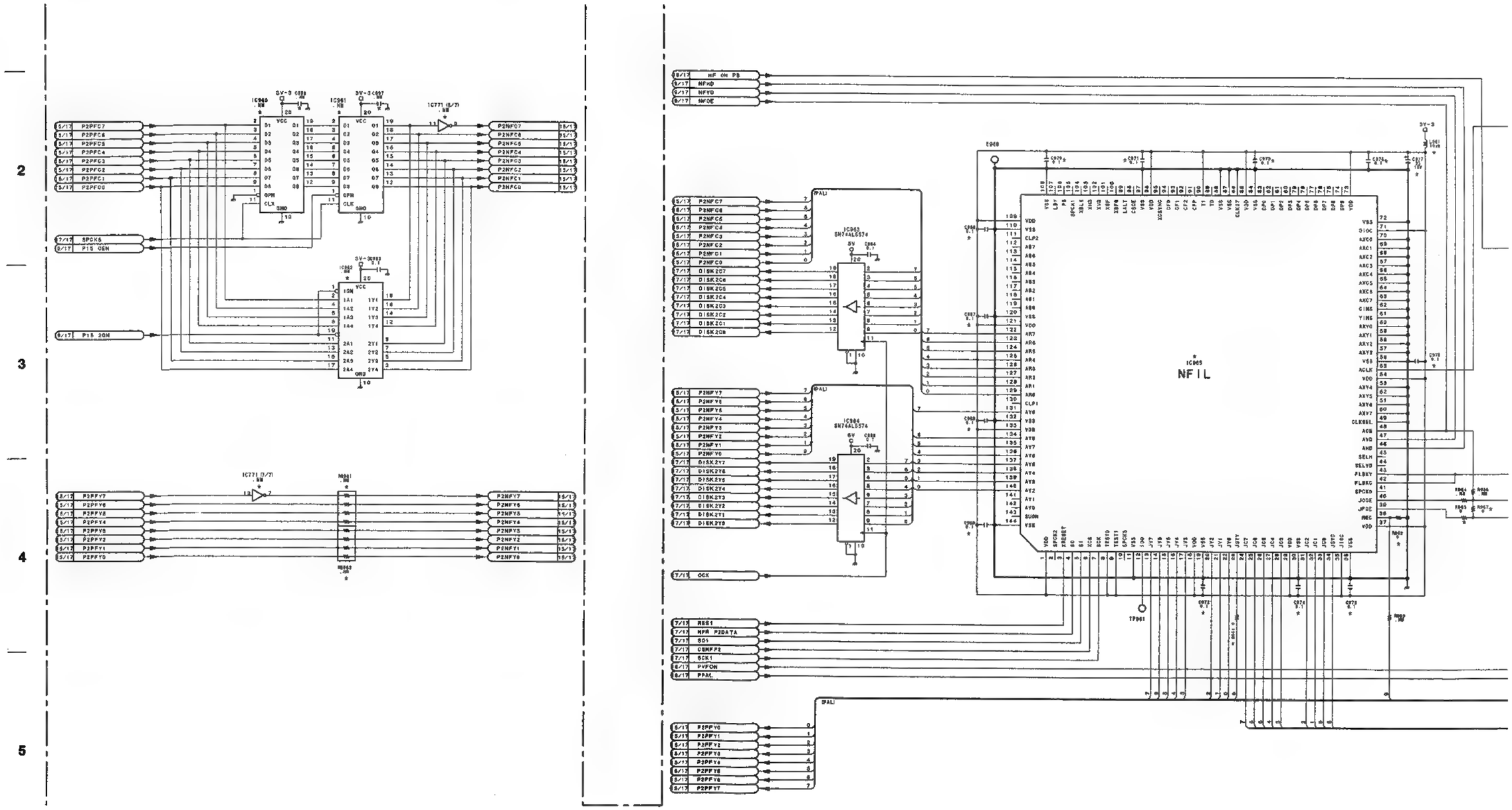

2-216 (1) 2-216 (1)

ESBK-7041

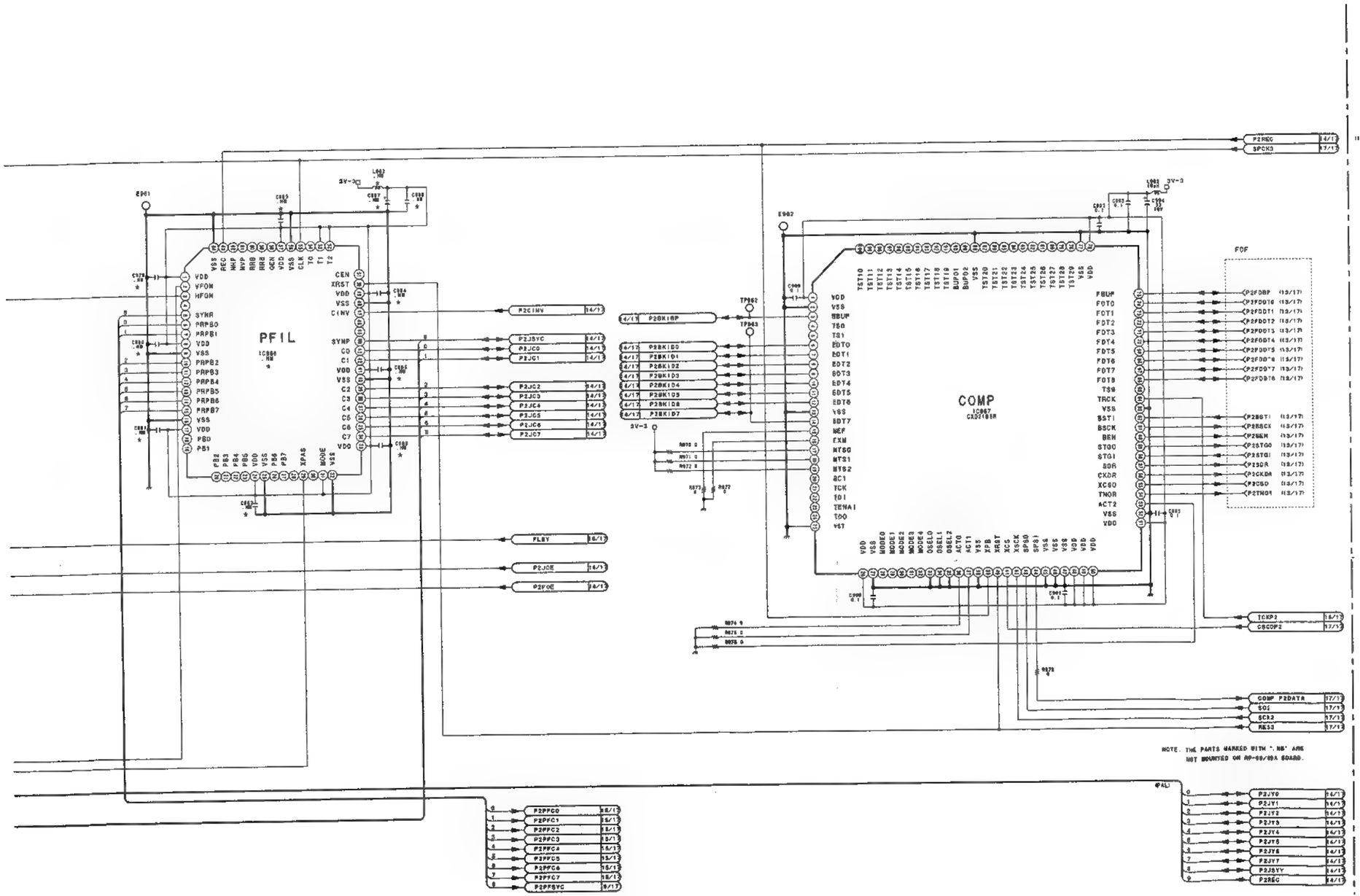

#	NTSC	PAL
C967	0.1	NB
C968	0.1	NB
C969	0.1	NB
C970	0.1	NB
C971	0.1	NB
C972	0.1	NB
C973	0.1	NB
C974	0.1	NB
C975	0.1	NB
C976	0.1	NB
C977	33 10V	NB
C978	0.1	NB
C979	NB	0.1
C980	NB	0.1
C981	NB	0.1
C982	NB	0.1
C983	NB	0.1
C984	NB	0.1
C985	NB	0.1
C987	NB	33 10V
C988	NB	0.1
C996	NB	0.1
C997	NB	0.1
IC960	NB	TC74VHC574F
IC961	NB	TC74VHC574F
IC962	NB	TC74VHC244F
IC965	NFIL	NB
IC966	NB	CXD2185R
L961	10UH	NB
L962	NB	10UH
R961	0	NB
R962	0	NB
R965	0	NB
R967	0	NB
RB961	NB	0
RB962	NB	0

RP-89/89A (15/17)
PART NO 1-662-794-12
MODEL ESBK-7041
B-ESBK7041-RP89-12

CTLG

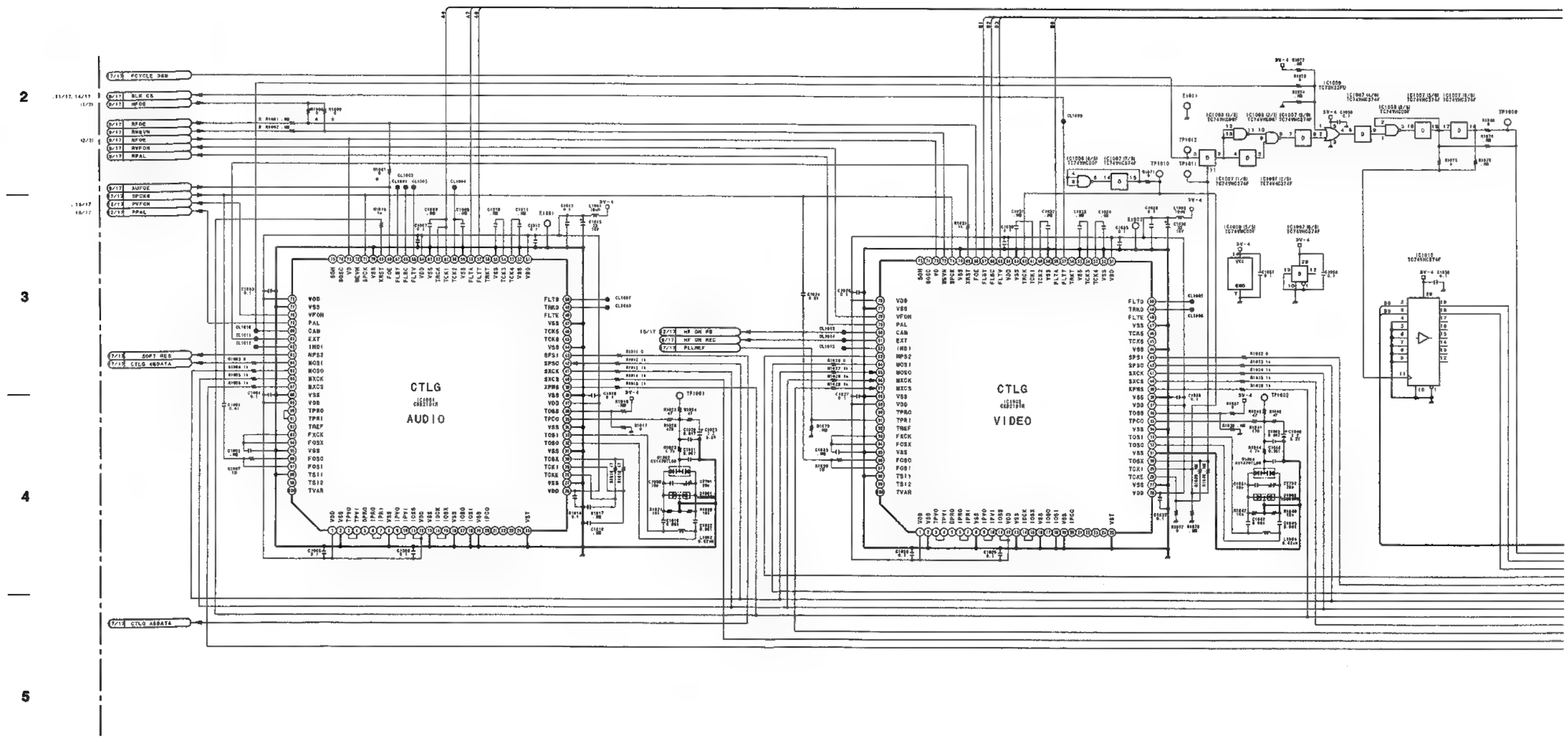

ESBK-7041

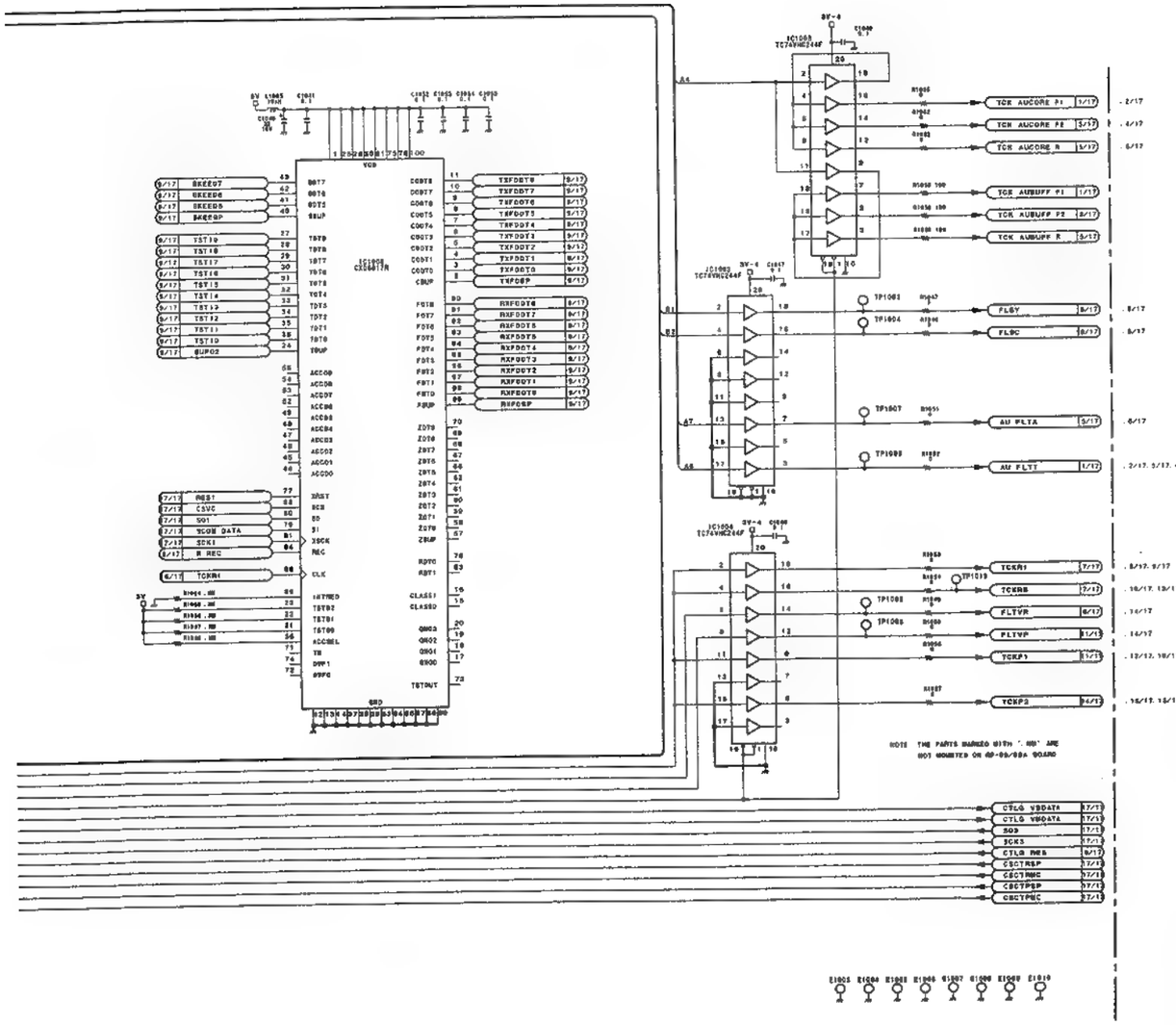

#	NTSC	PAL
R1001	* NM	0
R1003	* NM	0
R1008	0	* NM
R1009	0	* NM
R1061	0	* NM

RP-89/89A (16/17)
PART NO 1-662-794-12
MODEL ESBK-7041
B-ESBK7041-RP89-12

MB

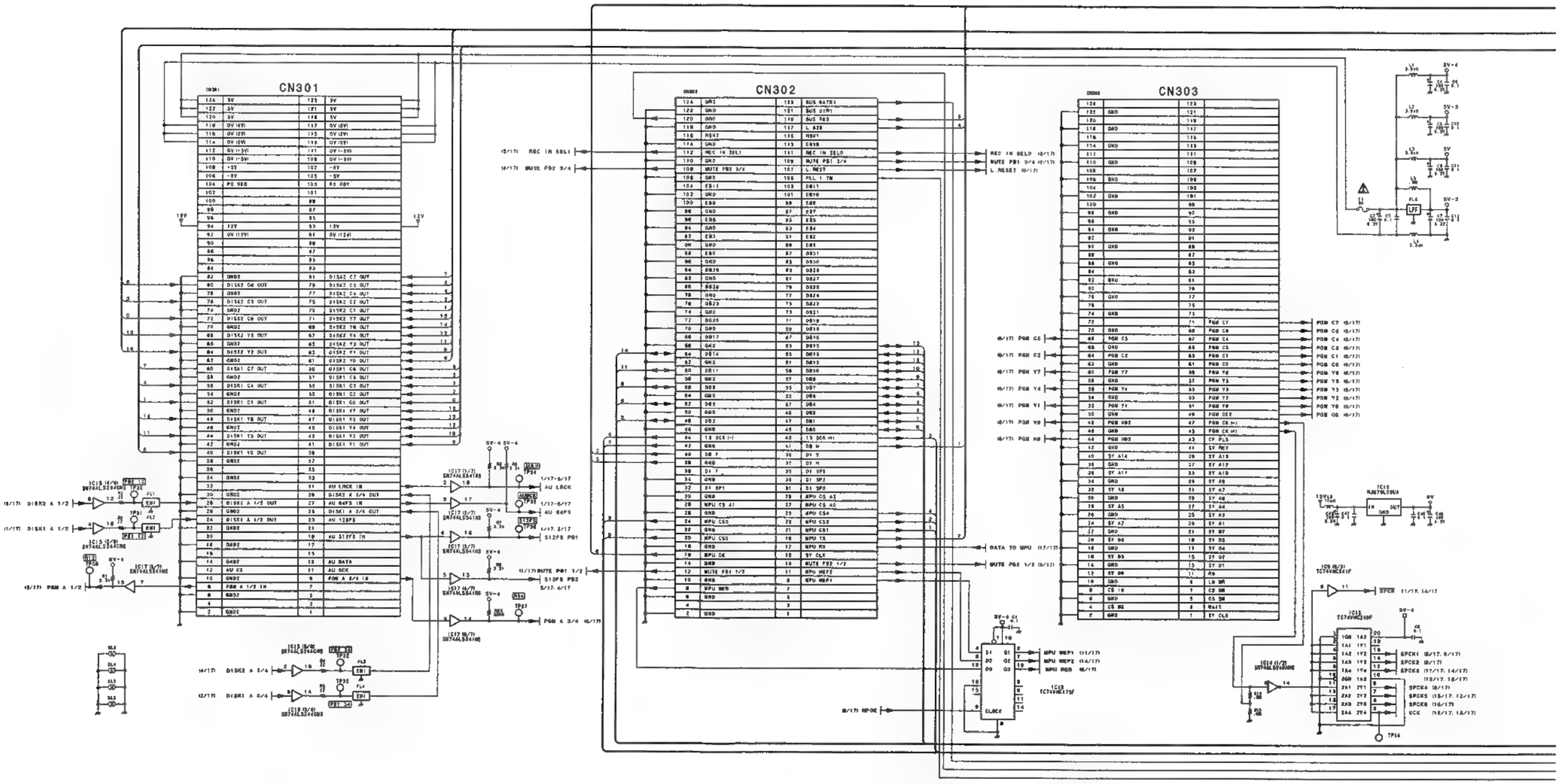

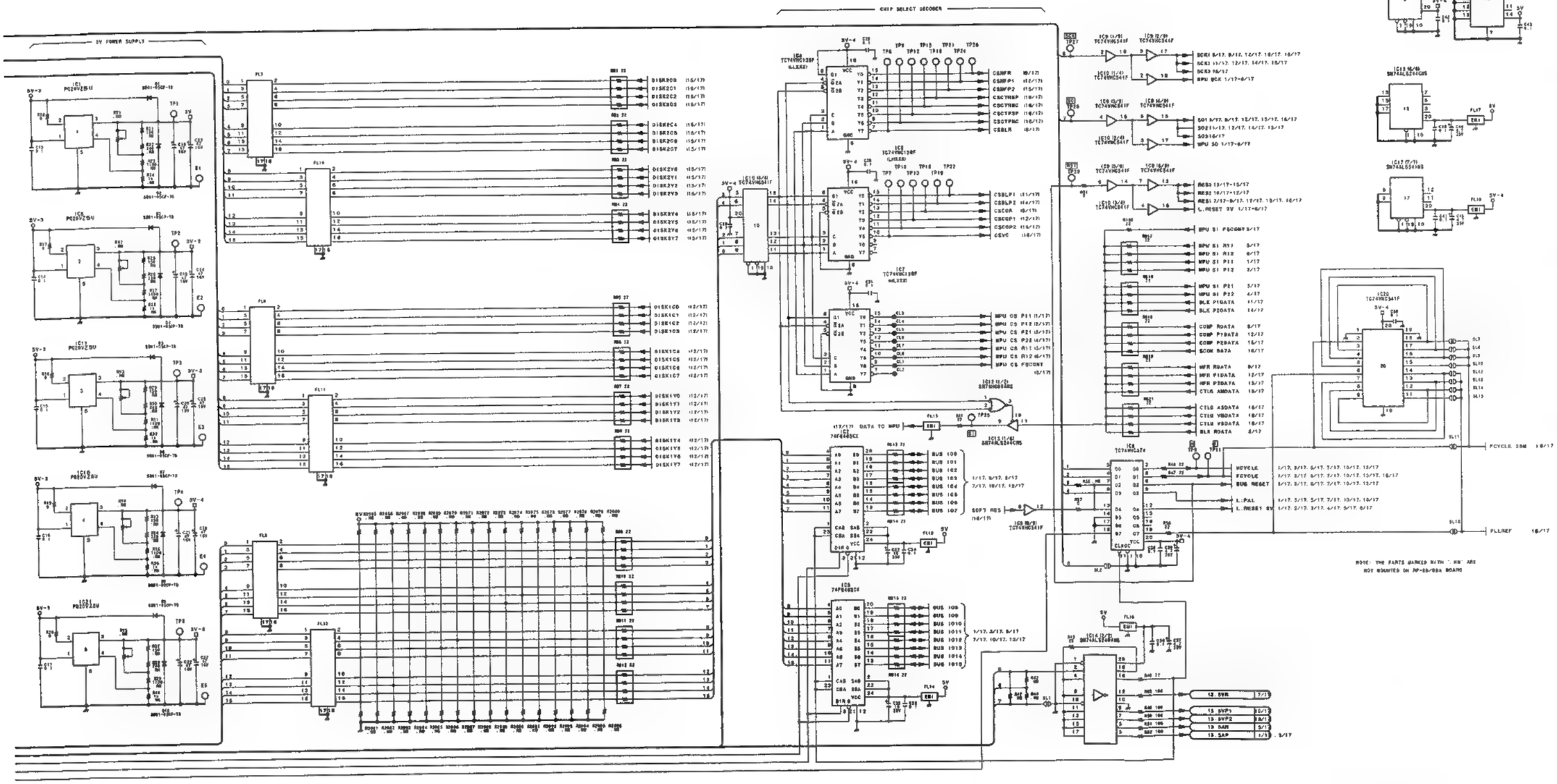
5V POWER SUPPLY
CHIP SELECT DECODER
IC1 PQ28V25U
IC6 PQ28V25U
IC11 PQ28V25U
IC16 PQ28V25U
IC21 PQ28V25U
IC8 TC74VHC138F
IC7 TC74VHC138F
IC9 74F648DCX
IC10 TC74VHC541F
IC12 TC74VHC541F
IC13 TC74VHC541F
IC14 TC74VHC541F
IC15 TC74VHC541F
IC17 TC74VHC541F
IC18 TC74VHC541F
IC19 TC74VHC541F
IC20 TC74VHC541F
IC24 TC74VHC374
IC25 TC74VHC541F
IC26 TC74VHC541F
IC27 TC74VHC541F
IC28 TC74VHC541F
IC29 TC74VHC541F
IC30 TC74VHC541F
IC31 TC74VHC541F
IC32 TC74VHC541F
IC33 TC74VHC541F
IC34 TC74VHC541F
IC35 TC74VHC541F
IC36 TC74VHC541F
IC37 TC74VHC541F
IC38 TC74VHC541F
IC39 TC74VHC541F
IC40 TC74VHC541F
IC41 TC74VHC541F
IC42 TC74VHC541F
IC43 TC74VHC541F
IC44 TC74VHC541F

AU PB1 1/2

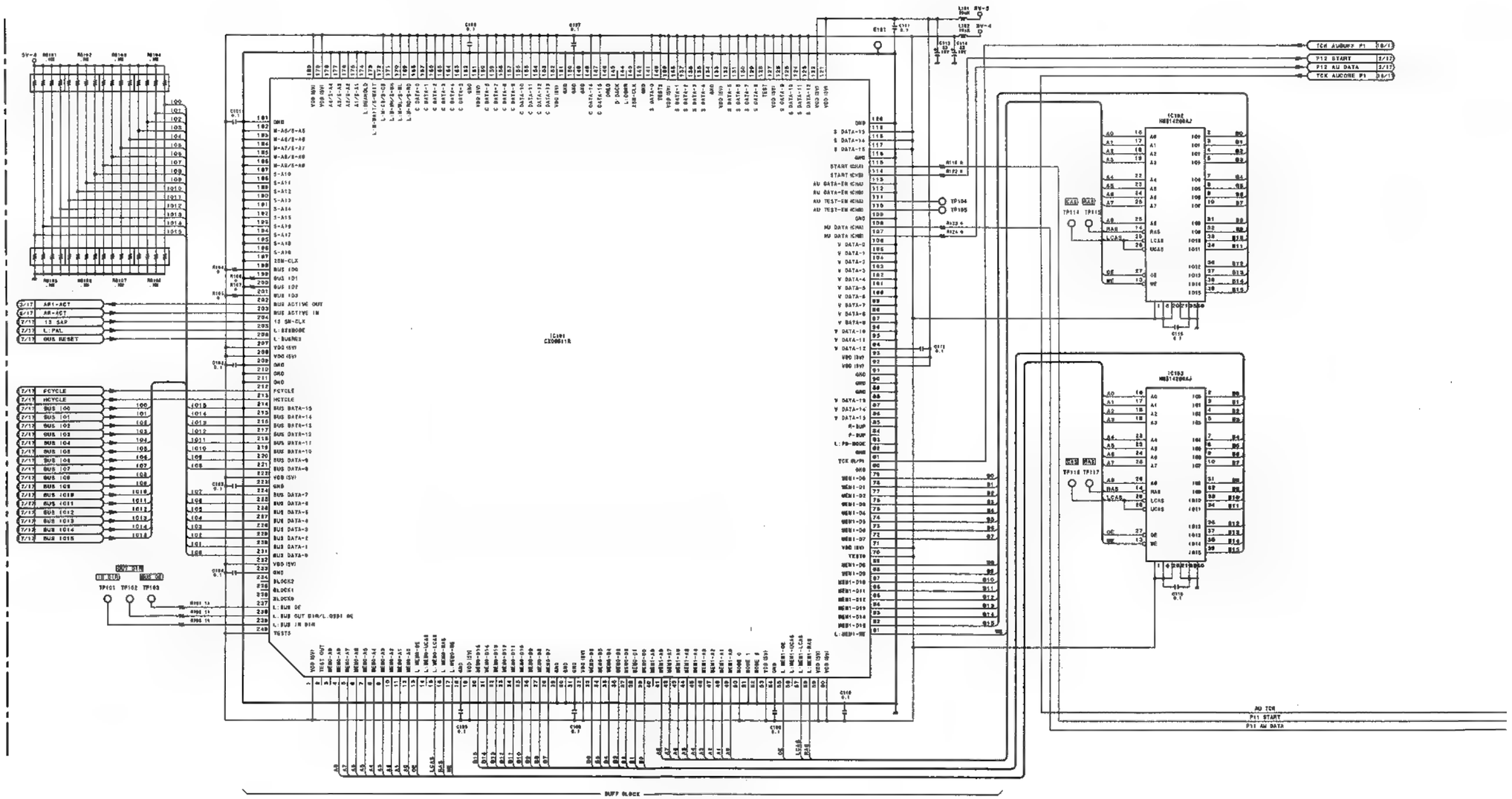

*	IC614	F7		RB807	K5
*	IC615	F7		RB808	J5
	IC701	A6		RB901	D8
	IC801	J7		RB902	D8
*	IC802	E5		RB903	F8
*	IC803	G6		RB904	C8
*	IC804	G6			
*	IC805	G5		RV11	A4
*	IC806	G6		RV201	C2
*	IC807	G6		RV301	F2
	IC809	J5		RV401	G2
*	IC810	H6		RV501	K3
	IC811	J5			
*	IC812	H6		S803	K4
*	IC813	J5		S804	K5
*	IC814	J8			
*	IC815	J8		TP2	C4
				TP202	D4
	L1	A1		TP302	F4
	L2	C4		TP402	H4
	L3	A1		TP503	J4
*	L4	B8		TP601	H8
*	L5	C8		TP602	H7
	L201	C1		TP603	H7
	L202	D2		TP604	H7
	L203	C1		TP605	H7
*	L204	D8		TP606	K7
*	L205	D8		TP607	K7
	L301	E8		TP608	K6
	L302	F2		TP801	J7
	L303	E1		TP802	J7
*	L304	E1		TP803	J7
*	L305	F8		TP804	H7
	L401	G1		TP805	H7
	L402	H2		TP901	E8
	L403	G1		TP902	A8
*	L404	H3			
*	L405	H3		X601	K7
	L501	K4			
	L502	H5			
	L503	J5			
	L504	H5			
	L505	K4			
	L506	K3			
	L508	K2			
	L509	J2			
	L510	J4			
	L511	J5			
	L512	K5			
	L513	K1			
	L514	J1			
	Q1	B3			
	Q3	B3			
	Q4	B1			
	Q5	A2			
	Q201	C3			
	Q203	C3			
	Q204	C1			
	Q205	C2			
	Q301	E3			
	Q303	E3			
	Q304	E1			
	Q305	E2			
	Q401	G3			
	Q403	G3			
	Q404	G1			
	Q405	G2			
*	Q406	G3			
	Q501	K3			
	Q502	K2			
	Q503	K2			
	RB1	C5			
	RB3	C5			
	RB4	B6			
	RB203	C6			
	RB204	B8			
	RB301	G5			
	RB303	E5			
	RB304	E6			
	RB403	E6			
	RB404	E8			
	RB601	H7			
	RB701	A6			
	RB801	J8			
	RB802	J5			
	RB803	J6			
	RB804	J7			
	RB805	E6			
	RB806	K5			

ESBK-7032

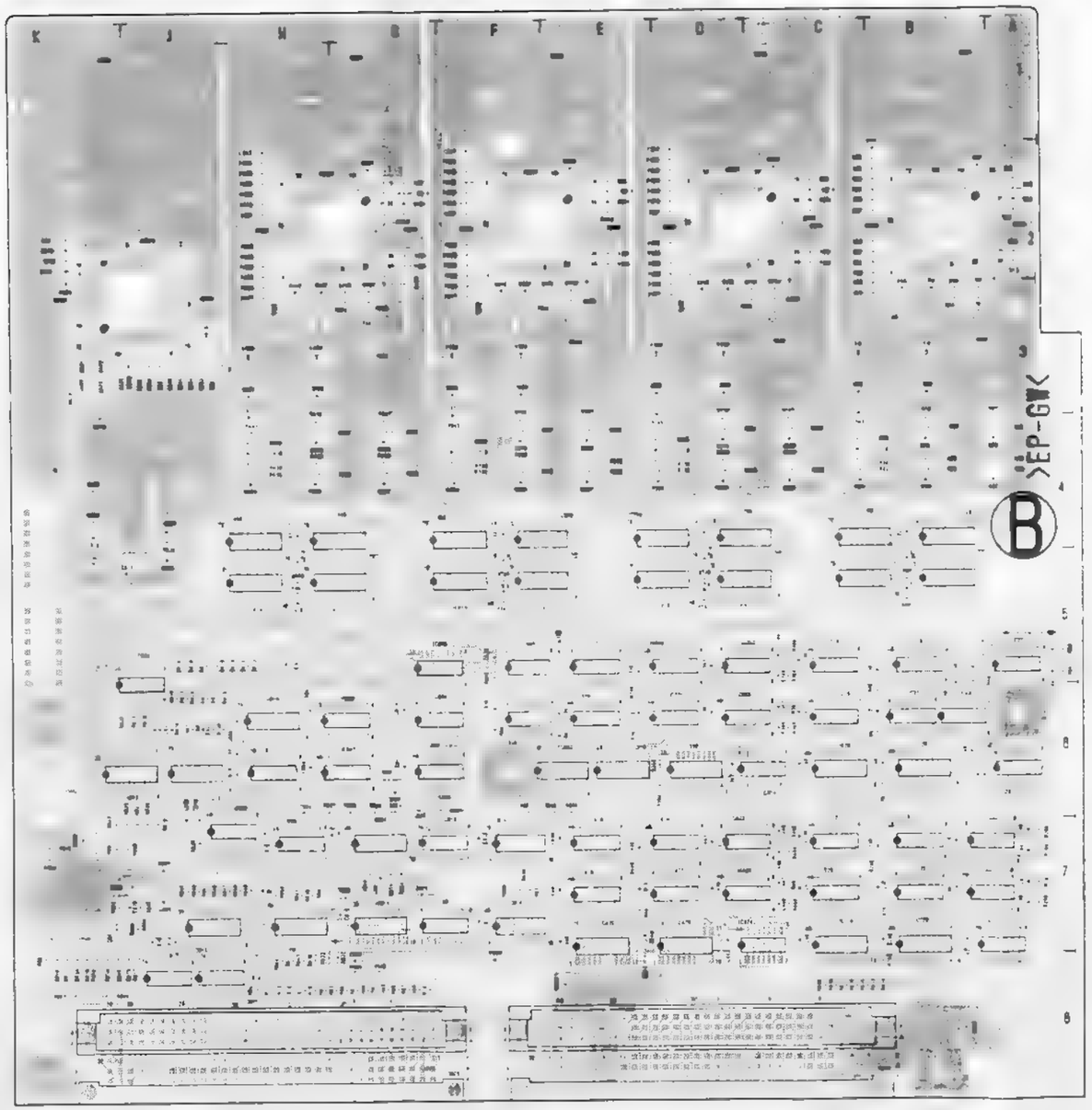

IO-148
PART NO 7-662-796-11
MODEL ESBK-7032
-B SIDE-

MPU-95 : DISK U NIT CONTROL BOARD

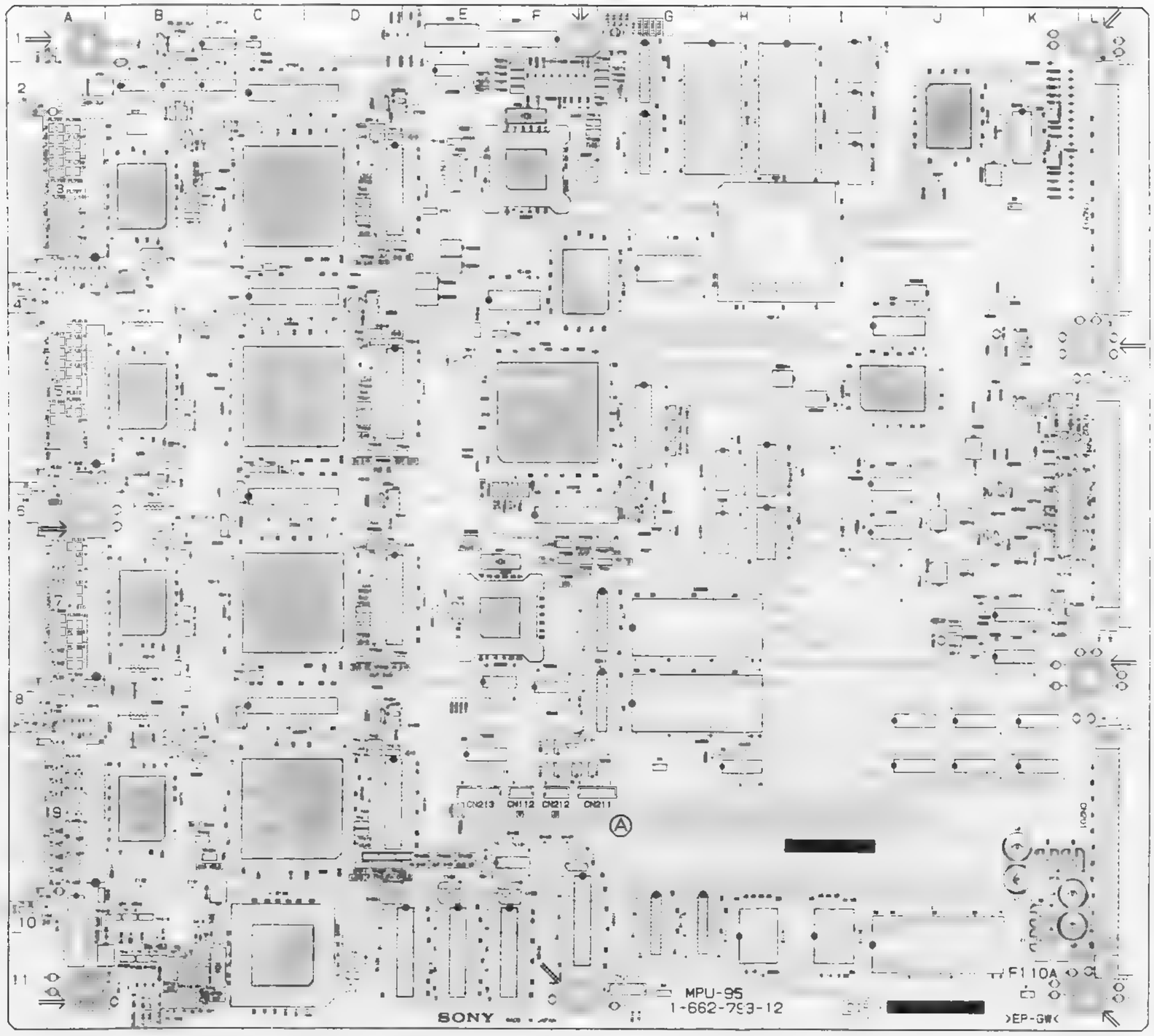

MPU-95 (1-662-793-12)

• B SIDE

CN111		FL304			
CN208		FL305			
CN209		FL306			
CN303		FL401			
CN304		FL402			
CN314		FL403			
CN111		FL404			
CN112		FL405			
CN20		FL406			
CN202		FL407			
CN203		FL408			
CN211		FL409			
CN212		FL410			
CN213		FL411			
CN311		FL412			
CN401		FL413			
CN501		FL414			
CN601		FL415			
CN701		FL416			
		FL417			
D101		FL418			
D102		FL501			
D103		FL502			
D104		FL503			
D105		FL504			
D106		FL505			
D107		FL506			
D108		FL507			
D201		FL508			
D202		FL509			
D203		FL510			
D301		FL511			
D302		FL512			
D303		FL513			
D304		FL514			
D305		FL515			
D3		FL516			
D3		FL517			
D3		FL518			
		FL601			
		FL602			
		FL603			
		FL604			
		FL605			
		FL606			
		FL607			
		FL608			
		FL609			
		FL610			
		FL611			
		FL612			
		FL613			
		FL614			
		FL615			
		FL616			
		FL617			
		FL618			
		FL701			
		FL702			
		FL703			
		FL704			
		FL705			
		FL706			
		FL707			
		FL708			
		FL709			
		FL710			
		FL711			
		FL712			
		FL713			
		FL714			
		FL715			
		FL716			
		FL717			
		FL718			
		FL719			
		FL720			
		FL721			
		FL722			
		FL723			
		FL724			
		FL725			
		FL726			
		FL727			
		FL728			
		FL729			
		FL730			
		FL731			
		FL732			
		FL733			
		FL734			

MPU-95
PART NO 1-662-793-12
MODEL ESBK-7041
-A SIDE-

RP-89/89A : REC/PLAY BOARD

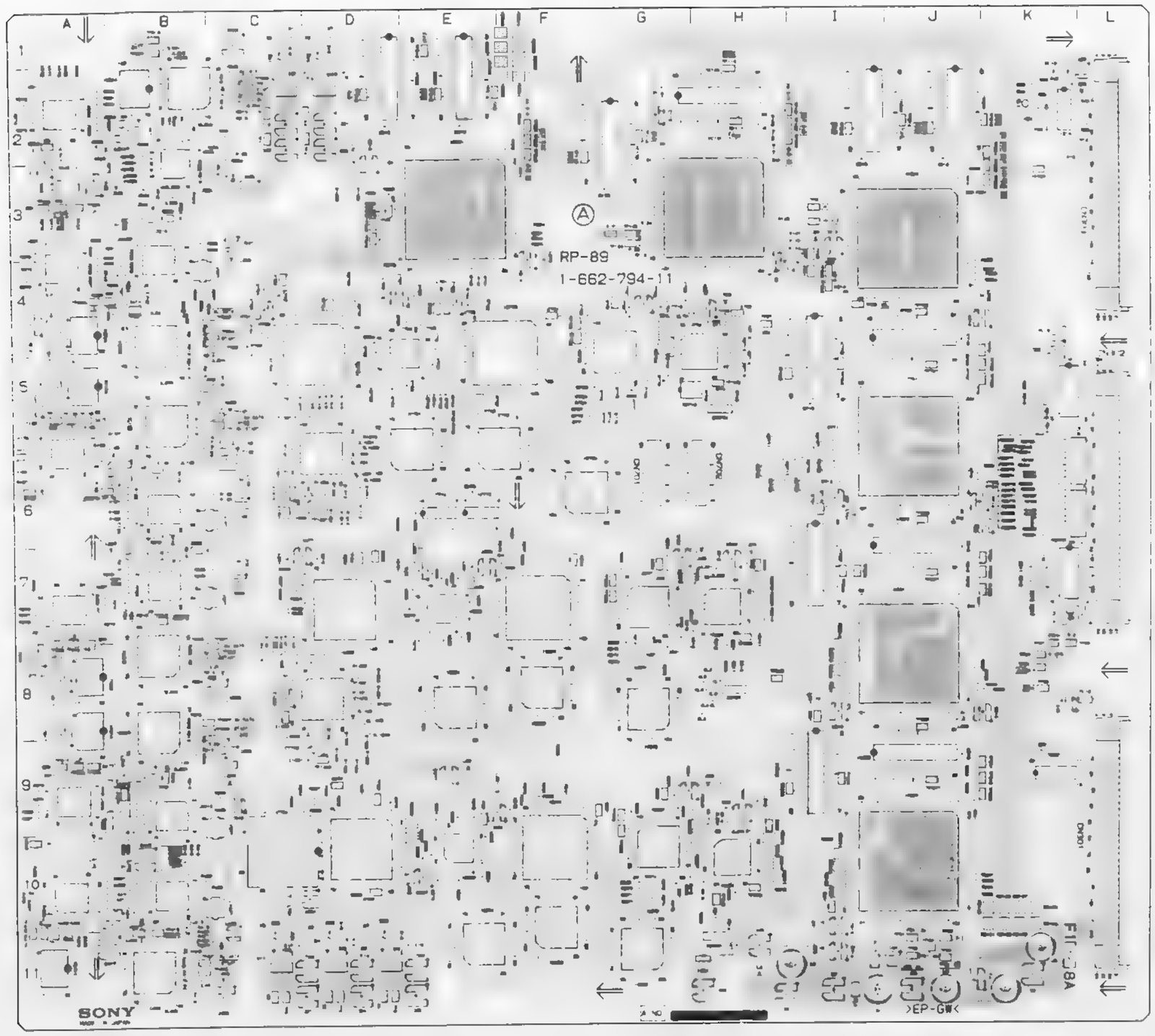

RP-89/89A
PART NO 1-662-794-11
MODEL ESBK-7041
-A SIDE-

RP-89/89A (1-6[illegible]

* B SIDE

CN1763	C10	* FL11	K8	IC732	F6
(RP-89A ONLY)		FL12	K6	IC733	F5
		FL13	K4	* IC760	D5
CN301	L9	FL14	K7	(RP-89A ONLY)	
CN302	L5	* FL15	J11	* IC761	E5
CN303	L2	FL16	K2	(RP-89A ONLY)	
CN701	G6	FL17	I11	* IC762	E4
CN702	H6	FL18	L8	(RP-89A ONLY)	
				* IC764	D10
CT701	D6	F1	K11	[illegible]	[illegible]
CT702	D9				
[illegible]	[illegible]	[illegible]	[illegible]	[illegible]	[illegible]
				* IC7[illegible]	E7
				(RP-89A ONLY)	
				* IC772	D10
				[illegible]89A ONLY	
				[illegible]73	D4
				[illegible]	E6
				[illegible]	E6
				[illegible]	J8
				[illegible]	J7
				[illegible]	H7
				[illegible]	E8
				[illegible]	G8
				[illegible]	F8
				* IC860	E8
				(RP-89A ONLY	
				* IC861	E8
				(RP-89A ONLY)	
				* IC862	[illegible]
				(RP-89A ONLY)	
				* IC863	I8
				* IC864	I7
				IC865	D7
				(RP-89 ONLY)	
				IC866	[illegible]
				(RP-89A ON[illegible]	
				IC867	[illegible]
				IC901	[illegible]
				IC902	[illegible]
				IC903	[illegible]
				IC904	[illegible]
				IC930	[illegible]
				IC931	[illegible]
				IC932	[illegible]
				IC933	[illegible]
				* IC960	[illegible]
				(RP-89A ONLY)	
				* IC961	G10
				(RP-89A ONLY)	
				* IC962	F9
				(RP-89A ONLY)	
				* IC963	I10
				* IC964	I9
				IC965	D10
				(RP-89 ONLY)	
				IC966	E10
				(RP-89A ONLY)	
				IC967	G10
				IC1001	D6
				IC1002	D8
				* IC1003	D8
				* IC1004	E8
				* IC1005	D2
* E1003	[illegible]				
* E1004	[illegible]			LV107	C6
* E1005	E5			LV207	B7
* E1006	I5		B4	LV307	C9
* E1007	J6			LV407	C10
* E1008	D8		B4	LV507	B4
* E1009	F8				
* E1010	J10			L1	K11
				L2	I11
* FL1	J11			L3	J11
* FL2	J11	IC604	A4	L4	K11
* FL3	J11	IC605	B4	L6	H11
* FL4	J11	IC611	A4	L101	G2
* FL5	K7	IC701	J5	L102	H4
* FL6	I11	IC702	I5	L103	C5
* FL7	K10	IC703	J4	L106	B6
* FL8	K9	IC704	H4	L108	C6
FL9	K6	IC730	F4	L111	A5
* FL10	K9	IC731	E5	L203	C8

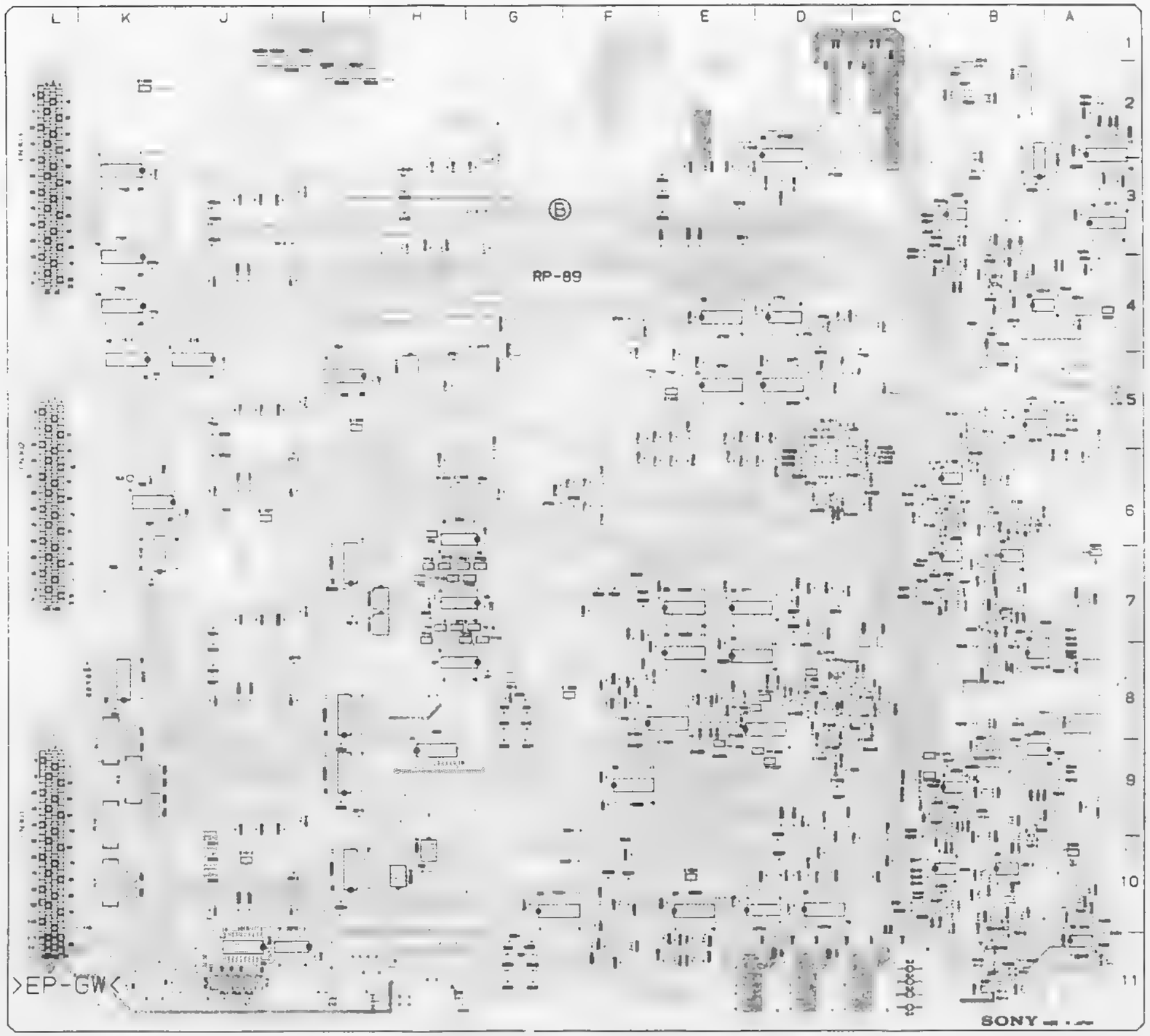

L301	I-3		RB763	D-5		TP309					
L302	K-4		(RP-89 ONLY)			TP310					
L303	C-9		RB764	D-5		TP314					
L306	B-9		(RP-89 ONLY)			TP315					
L308			RB801	I-8		TP316					
L311			RB802			TP317					
L403			RB803			TP318					
L406	B-10		RB804			TP406					
L408	C-11		RB805			TP407					
L411	A-10		RB806			TP408					
L501	D-2		RB807			TP409					
L502	F-4		RB812			TP410					
L503	B-2	*	RB813			TP418					
L504	B-3		RB861			TP501					
L505	C-3		(RP-89A ONLY)			TP502					
L506	B-3		RB862	D-6		TP503					
L508	C-3		(RP-89A ONLY)			TP504					
L510	A-3		RB901	I-10		TP505					
L603	C-5		RB902	I-10		TP506					
L610	A-4		RB903	I-10		TP507					
L701	I-6		RB904	I-10		TP508					
L702	J-6		RB905	H-9		TP509	A-3				
L703	H-4		RB906	H-10		TP510	C-2				
L731	E-4		RB907	H-10		TP511	C-2				
L761	C-10	*	RB912	H-10		TP512	E-1				
(RP-89A ONLY)		*	RB913	H-10		TP513	D-2				
L762	C-4	*	RB961	E-10		TP514	E-2				
(RP-89 ONLY)			(RP-89A ONLY)			TP515	E-2				
L763	D-4		RB962	E-9		TP517	A-3				
(RP-89A ONLY)			(RP-89A ONLY)			TP518	B-1				
L764	G-4					TP604	C-4				
L801	I-8		TP1	C-2		TP605	C-4				
L802	J-8		TP2	D-11		TP606	C-4				
L803	H-7		TP3	D-11		TP607					
L831	E-7		TP4	D-2		TP608					
L861	C-7		TP5	C-11		TP609					
(RP-89 ONLY)		*	TP6	H-6		TP701					
L862	E-7	*	TP7	H-7		TP702					
(RP-89A ONLY)			TP8	I-3		TP703					
L863	H-7	*	TP9	H-7		TP704					
L901	I-10	*	TP10	H-7		TP705					
L902	I-11		TP11	I-		TP706					
L903	H-9		TP12	H-7		TP707					
L931	E-9	*	TP13	H-7		TP708					
L961	E-9		TP14	I-		TP709					
(RP-89 ONLY)		*	TP15	H-7		TP761					
L962	E-10	*	TP16	H-7		TP762					
(RP-89A ONLY)		*	TP18	H-7		TP763					
L963	H-9		TP19	G-7		TP764					
L1001	C-6	*	TP21	H-7		TP765					
L1002	D-6	*	TP22	G-7		TP766					
L1003	C-8	*	TP24	G-7		TP767					
L1004	D-8		TP25	J-11		TP801					
L1005	G-6		TP26	G-7		TP802					
			TP27	H-4		TP803					
* Q101			TP28	I-4		TP804					
* Q201			TP29	I-3		TP805					
* Q301			TP30	J-11		TP806					
* Q401			TP31	J-11		TP807					
			TP32	J-11		TP808					
* RB1			TP33	J-11		TP809					
* RB2			TP34			TP861					
* RB3			TP35			TP862					
* RB4			TP36			TP863					
* RB5			TP37			TP901					
* RB6			TP38			TP902					
* RB7			TP101			TP903					
* RB8			TP102			TP904					
RB9			TP103			TP905					
RB10			TP104			TP906					
RB11			TP105	G-		TP907					
RB12			TP106			TP908					
RB13			TP107			TP909					
RB14			TP108	A-5		TP961					
RB15			TP109	A-5		TP962					
RB16			TP110	A-5		TP963					
* RB17			TP114	G-2		TP1001	D-6				
* RB18			TP115	F-2		TP1002	D-9				
* RB19			TP116	H-2	*	TP1003	E-8				
* RB20			TP117	H-2	*	TP1004	D-8				
* RB21			TP118	A-6		TP1005	E-8				
RB701			TP206	C-8	*	TP1006	E-9				
RB702			TP207	C-8	*	TP1007	D-9				
RB703			TP208	A-7	*	TP1008	E-9				
RB712			TP209	A-7	*	TP1009	C-9				
RB713			TP210	A-7		TP1010	C-9				
RB714	H-5		TP218	B-7		TP1011	C-8				
RB715	H-5		TP301	K-2		TP1012	C-9				
RB716	G-5		TP302	K-3		TP1013	F-9				
* RB717	H-5		TP303	K-3							
RB761	D-4		TP304	I-4							
(RP-89A ONLY)			TP305	I-4							
RB762	D-4		TP306	B-8							
(RP-89A ONLY)			TP307	B-8							
			TP308	A-9							

RP-89/89A
PART NO 1-662-794-12
MODEL ESBK-7041
-B SIDE-

ESBK 7041

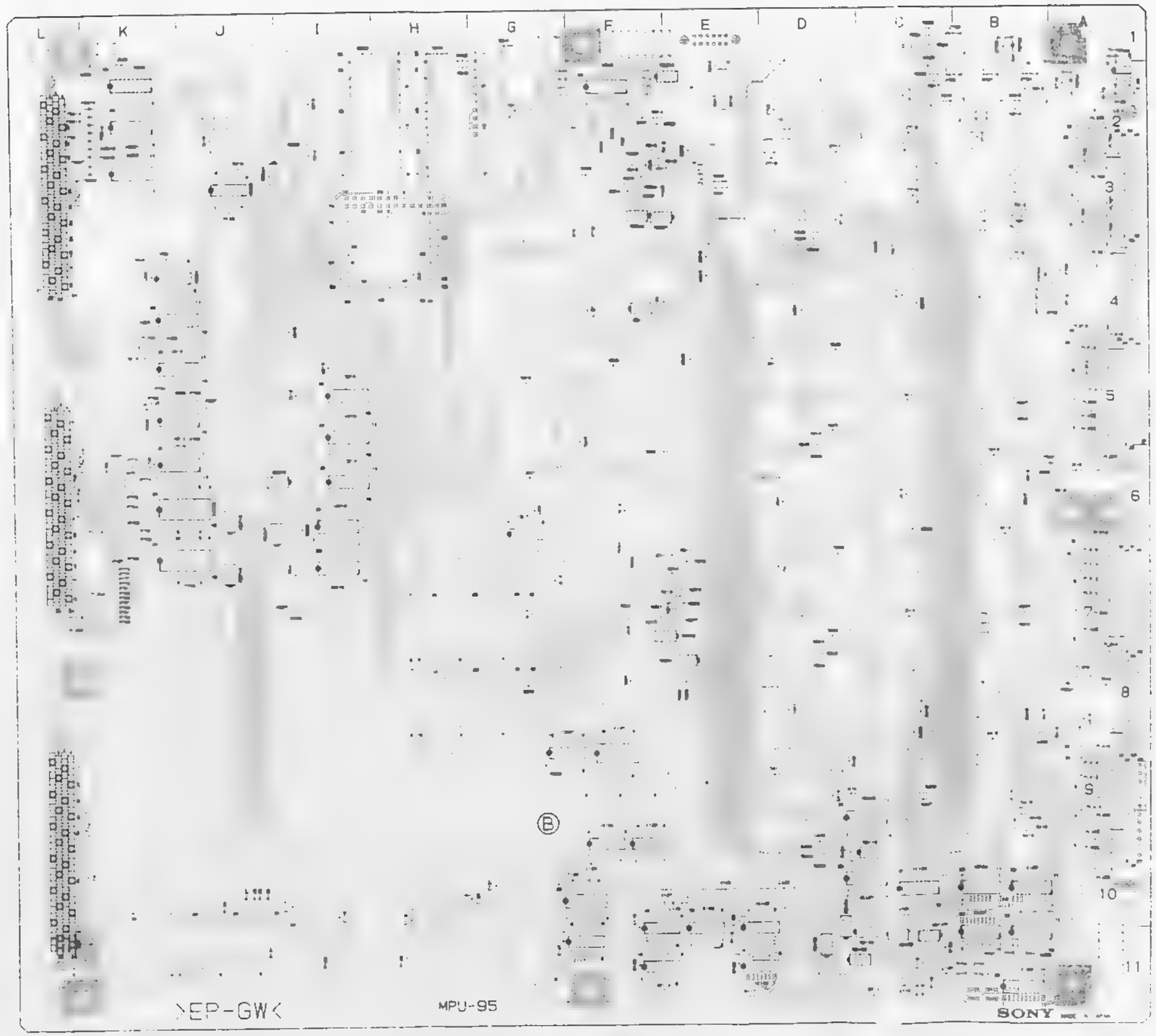

IC502	C7	RB717	J5	TP618	A
IC503	D7			TP701	
IC504	C6	S101	A7	TP702	
IC505	B7	S102	A10	TP703	
IC506	A8	S201		TP704	
IC601	D4	S301		TP705	
IC602	C5			TP706	
IC603	D5	TP101		TP707	
IC604	C4	TP102		TP708	
IC605	B5	TP103		TP709	
IC606	A6	TP104		TP710	
IC701	D2	TP105		TP711	
IC702	C3	TP106		TP712	
IC703	D3	TP107		TP713	
IC704	C2	TP108		TP714	
IC705	B3	TP109		TP716	
IC706	A3	TP110		TP717	
* IC708	J6	TP111		TP718	
* IC709	J7	TP112		TP901	
* IC710	K6	TP113		TP902	
IC711	B2	TP114		TP903	
IC712	B2	TP115		TP904	
IC713	C2	TP116		TP905	
IC714	C1	TP117		TP906	
IC901	G6	TP201		TP907	
IC902	F5	TP202		TP908	
IC903	F6	TP203		TP909	
IC904	G5	TP204		TP910	
IC908	I7	TP205		TP911	
		TP206		TP912	
L1	K10	TP301			
L2	K10	TP302		X701	
L3	K10	TP303		X702	
L4	K10	TP304			
L401	B8	TP305			
L402	B8	TP306			
L501	B6	TP307			
L502	B6	TP308			
L601	B4	TP309			
L602	B6	TP310			
L701	B2	TP311			
L702	B4	TP312			
L901	E5	TP313			
		TP314			
Q401	B9	TP401			
* Q402	B8	TP402			
Q501	B8	TP403			
Q502	B8	TP404			
Q601	B6	TP405			
* Q602	B6	TP406			
Q701	B4	TP407			
* Q702	A4	TP408			
		TP409			
RB101	A11	TP410			
* RB102	D11	TP411			
* RB103	D11	TP412			
* RB104	C10	TP413			
* RB105	C11	TP414			
* RB106	C11	TP415			
* RB107	C11	TP416			
RB108	B11	TP417			
RB109	C10	TP418			
* RB110	C10	TP419			
* RB111	F4	TP501			
RB112	E10	TP502			
* RB201	E8	TP503			
* RB202	F7	TP504			
RB203	I5	TP505			
RB204	H5	TP506			
RB205	K2	TP507			
* RB301	F3	TP508			
* RB302		TP509			
* RB303	E2	TP510			
* RB304	J3	TP511			
RB305	J4	TP516			
* RB306	J5	TP517			
* RB307	J6	TP518			
RB701	K6	TP601			
RB702	K6	TP602			
RB703	K6	TP603			
RB704	K6	TP604			
RB705	K6	TP605			
RB706	K6	TP606			
RB707	K6	TP607			
RB708	K7	TP608			
RB709	J6	TP609			
RB710	J6	TP610			
RB711	J7	TP611			
RB712	J7	TP612			
* RB713	J6	TP616			
* RB714	J7	TP617			

ESBK-7041

3-35 3-35

MPU-95
PART NO 1-662-793-11
MODEL ESBK-7041
-B SIDE-

RP-89/89A : REC/PLAY BOARD

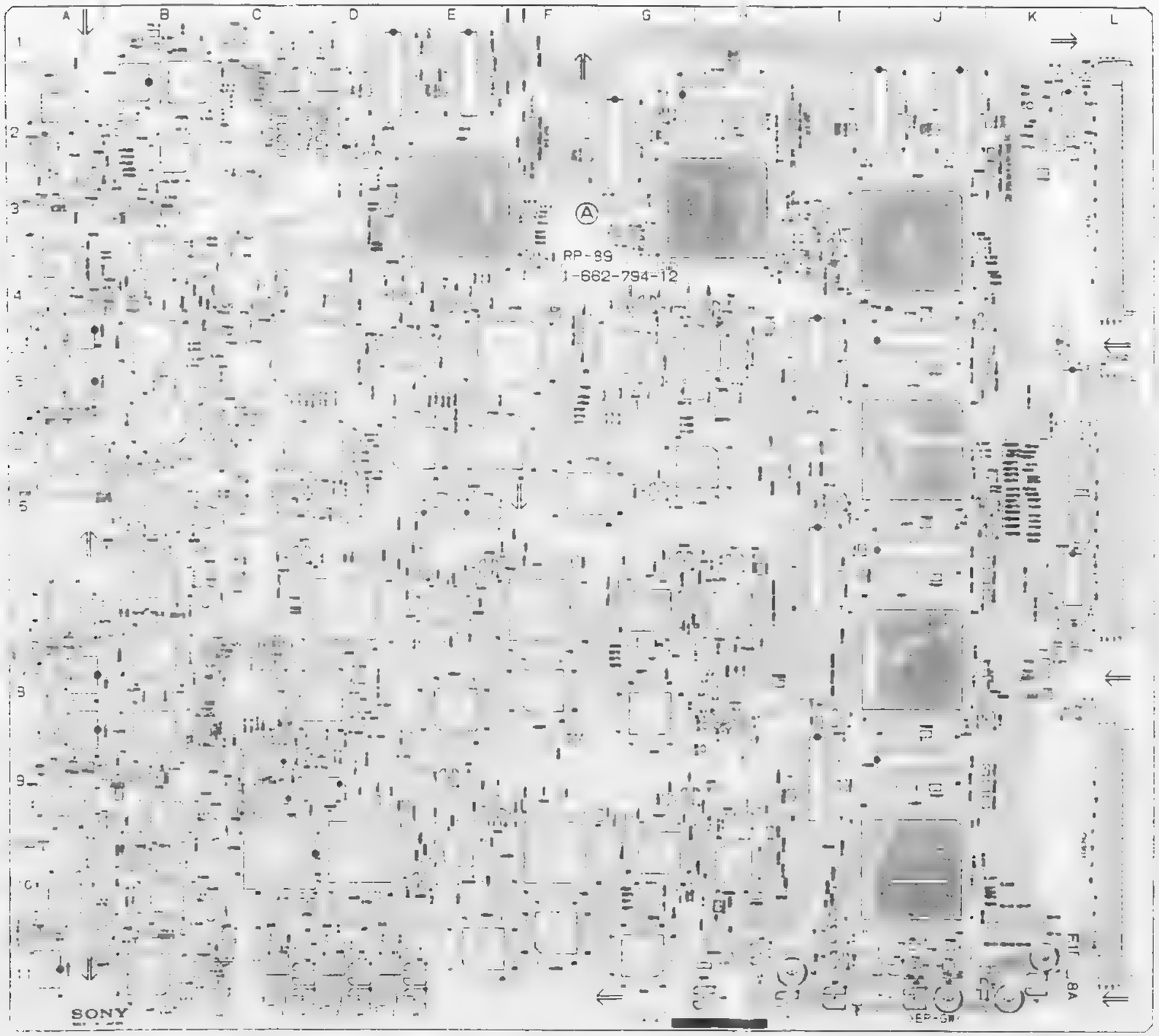

RP-89/89A (1-662-794-12)

* B SIDE

CN1763	C-10		FL18	L-8	*	IC762	E-4
(RP-89A ONLY)						(RP-89A ONLY)	
			F1	K-11		IC763	C-10
CN301	L-9					(RP-89A ONLY)	
CN302	L-5		IC1	C-2	*	IC764	D-10
CN303	L-2		IC2	K-5		(RP-89A ONLY)	
CT701	D-6		IC3	K-7	*	IC765	K-3
CT702	D-9	*	IC4		*	IC766	K-4
		*	IC5		*	IC767	K-4
D1	C-1		IC6			IC768	D-4
D2	C-1	*	IC7			(RP-89 ONLY)	
D3	D-	*	IC8			IC769	E-4
D4	D-11	*	IC9			(RP-89A ONLY)	
D5	D-	*	IC10			IC770	G-4
D6			IC11		*	IC771	7
D7		+	IC12			(RP-89A ONLY)	
D8		*	IC13	J-11	*	IC772	D-10
D9	C		IC14	K-2		(RP-89A ONLY)	
D10	C-11		IC15	J-5		IC773	D-4
* D101	C-5		IC16	D-2		IC774	E-6
* D201	C-7	*	IC17	K-8		IC776	E-6
* D301	C-9		IC18	K-7		IC801	J-8
* D401	C-10		IC19	H-11		IC802	-
* D501	C-4		IC20			IC803	J-7
* D1001	D-6		IC21			IC804	H-7
* D1002	D-6		IC101			IC830	F-7
* D1003	D-6		IC102			IC831	E-8
* D1004	D-9		IC103			IC832	G-8
			IC104			IC833	8
E1	C-2		IC105			IC860	8
E2			IC106	B-6		(RP-89A ONLY)	
			IC108	C	*	IC861	E-8
		*	IC110	B		(RP-89A ONLY)	
			IC111	A-			
		*	IC112	B-		(RP-89A ONLY)	
			IC113	B-6	*	IC863	I-8
		*	IC114	B-6	*	IC864	
			IC204	A-8		IC865	D-
			IC205	B-8		(RP-89 ONLY)	
		*	IC206	B-7		IC866	E-7
E302	B-9	*	IC208	C-7		(RP-89A ONLY)	
E303	A-10		IC210	B-8		IC867	G-7
E402	B-11		IC211	A-7		IC901	J-1
* E403	A-10		IC213	B-7		IC902	I-9
E501	D-3		IC214	B-7		IC903	J-9
E502	B-3		IC301	J-3		IC904	H-10
E503	A-2		IC302	I-2		IC930	F-10
* E603	A-4		IC303	J-2		IC931	E-11
E701	I-6		IC304	A-8		IC932	G-11
E702	H-4		IC305	B-5		IC933	F-10
E730	F-4	*	IC306	B-9	*	IC960	E-10
E760	D-10	*	IC308	B-9		(RP-89A ONLY)	
E761	G-4	*	IC310		*	IC961	G-10
	C-4		IC311			(RP-89A ONLY)	
	E-4	*	IC312		*	IC962	F-9
	5		IC313			(RP-89A ONLY)	
		*	IC314		*	IC963	I-10
			IC404		*	IC964	I-9
			IC405			IC965	D-10
		*	IC406			(RP-89 ONLY)	
		*	IC408			IC966	E-10
		*	IC410			(RP-89A ONLY)	
			IC411			IC967	G-10
			IC413			IC1001	
		*	IC414			IC1002	
			IC501	E-3	*	IC1003	
	9		IC502	D-2	*	IC1004	
	C-6		IC503	E-2	*	IC1005	
	C-8		IC504	B-2		IC1006	
	K-2		IC505	B-2		IC1007	
* E1004	E-10	*	IC508	B-3		IC1008	
* E1005	E-5	*	IC509	A-2		IC1009	
* E1006	I-5	*	IC510	B-4		IC1010	
* E1007	J-6		IC511	A-2			
* E1008	D-8		IC512	B-4		LV107	
* E1009	F-8	*	IC513	A-3		LV207	
* E1010	J-10	*	IC515	B-3		LV307	
* E1011	C-9		IC516	B-2		LV407	
			IC518	B-3		LV507	
* FL1	J-11		IC604	A-4			
* FL2	J-11		IC605	B-4			
* FL3	J-11		IC611	A-4			
* FL4	J-11		IC701	J-5			
FL5	I-11		IC702	I-5			
* FL7	K-10		IC703	J-4			
* FL8	K-9		IC704	H-4			
FL9	K-6		IC730	F-4			
* FL10	K-9		IC731	E-5			
* FL11	K-8		IC732	F-6			
FL12	K-6		IC733	F-5			
13	K-4	*	IC760	D-5			
FL14	K-7		(RP-89A ONLY)				
* FL15	J-11	*	IC761	E-5			
FL16	K-2		(RP-89A ONLY)				

RP-89/89A
PART NO. 1-662-794-12
MODEL ESBK-7041
-A SIDE-

MPU-95 : DISK UNIT CONTROL BOARD

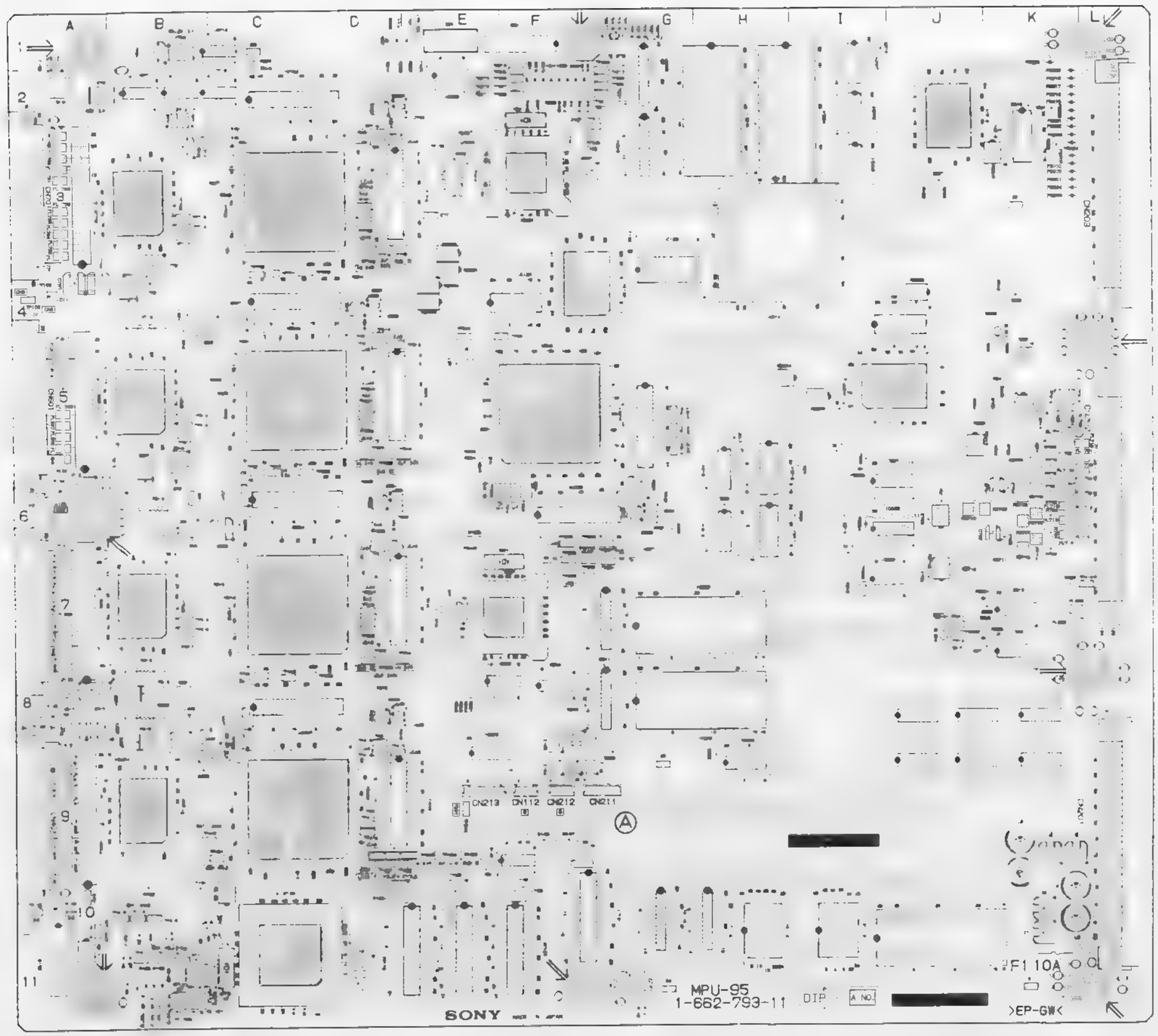

- B SIDE

CN1111					
CN1208					
CN1209					
CN1303					
CN1304					
CN1314					
CN111					
CN112					
CN201					
CN202					
CN203					
CN211					
CN212					
CN213					
CN311					
CN401					
CN501					
CN601					
CN701					
D101					
D102					
D103					
D104					
D105					
D106					
D107					
D108					

MPU-95
PART NO 1-662-793-11
MODEL ESBK-7041
-A SIDE-

IC501	D-6	RB717	J-5	TP705	D-3
IC502	C-7			TP707	D-3
IC503	D-7	S101	B-2	TP708	D-3
IC504	C-6	S102	A-10	TP709	[illegible]
IC505	B-7	S201	E-1	TP710	[illegible]
IC506	A-8	S301	F-1	TP711	[illegible]
IC601	D-4			TP712	[illegible]
IC602	C-[illegible]	TP101	B-[illegible]	TP713	B-[illegible]
IC603	D-5	TP102	B-[illegible]	TP714	B-[illegible]
IC604	C-4	TP103	[illegible]	TP715	[illegible]
IC605	[illegible]	TP104	B-[illegible]	TP716	B-[illegible]
IC606	A-[illegible]	TP105	A-[illegible]	TP717	B-[illegible]
IC701	D-2	TP106	A-[illegible]	TP718	B-[illegible]
IC702	C-3	TP107	A-[illegible]	TP901	F-[illegible]
IC703	D-3	TP108	A-4	TP902	[illegible]
IC704	C-2	TP109	[illegible]	TP903	[illegible]
IC705	B-3	TP110	B-[illegible]	TP904	[illegible]
IC706	A-3	TP111	B-[illegible]	TP905	[illegible]
* IC708	J-6	TP112	B-[illegible]	TP907	[illegible]
* IC709	J-7	TP113	B-[illegible]	TP908	[illegible]
* IC710	K-6	TP114	B-[illegible]	TP909	[illegible]
IC711	B-2	TP115	B-[illegible]	TP910	[illegible]
IC712	B-2	TP116	B-[illegible]	TP911	[illegible]
IC713	C-2	TP117	[illegible]	TP912	[illegible]
IC714	C-1	TP201	[illegible]		
IC901	G-6	TP202	F-[illegible]	X701	[illegible]
IC902	[illegible]	TP203	[illegible]	X702	[illegible]
IC903	F-[illegible]	TP204	[illegible]		
IC904	G-5	TP205			
		TP206	[illegible]		
L1	[illegible]	TP301	[illegible]		
L2	[illegible]	TP302	[illegible]		
L3	[illegible]	TP303	[illegible]		
L4	[illegible]	TP304	[illegible]		
L401	B-[illegible]	TP305	[illegible]		
L402	B-[illegible]	TP306	[illegible]		
L501	B-[illegible]	TP307	[illegible]		
L502	B-[illegible]	TP308	[illegible]		
L601	B-[illegible]	TP309	[illegible]		
L602	B-[illegible]	TP310	F-2		
L701	F-[illegible]	TP311	J-7		
L702	B-[illegible]	TP312	J-7		
L901	[illegible]	TP313	[illegible]		
		TP314	K-5		
Q401	B-[illegible]	TP401	C-10		
Q402	B-[illegible]	TP402	B-10		
Q501	B-[illegible]	TP403	D-10		
Q502	B-[illegible]	TP404	D-10		
Q601	B-[illegible]	TP405	D-10		
Q602	B-[illegible]	TP406	D-10		
Q701	B-[illegible]	TP407	D-10		
Q702	B-[illegible]	TP410	[illegible]		
		TP411	D-10		
RB101	A-11	TP412	D-9		
* RB102	D-11	TP413	D-9		
* RB103	[illegible]	TP414	[illegible]		
* RB104	D-10	TP415	D-9		
* RB105	C-11	TP416	B-10		
* RB106	C-11	TP417	B-11		
* RB107	C-11	TP418	B-10		
RB108	B-11	TP501	C-8		
RB109	C-10	TP502	D-8		
* RB110	C-10	TP503	D-8		
* RB111	F-4	TP504	D-8		
RB112	E-10	TP506	D-7		
* RB201	E-8	TP507	D-7		
* RB202	F-7	TP508	D-7		
RB203	H-5	TP509	D-6		
RB204	H-5	TP510	D-7		
RB205	K-3	TP511	D-7		
* RB301	F-3	TP516	B-7		
* RB302	F-3	TP517	B-8		
* RB303	E-2	TP518	B-7		
* RB304	J-3	TP601	C-8		
RB305	J-4	TP602	C-6		
* RB306	J-6	TP603	D-6		
* RB307	J-6	TP604	D-6		
RB701	K-6	TP605	D-6		
RB702	K-6	TP607	D-5		
RB703	K-6	TP608	D-5		
RB704	K-6	TP609	D-5		
RB705	K-6	TP610	D-4		
RB706	K-6	TP611	D-4		
RB707	K-6	TP612	D-4		
RB708	K-7	TP615	B-5		
RB709	J-6	TP617	B-6		
RB710	J-6	TP618	B-5		
RB711	J-7	TP701	C-4		
RB712	J-7	TP702	C-4		
* RB713	J-6	TP703	D-3		
* RB714	J-7	TP704	D-3		

MPU-95
PART NO. 1-662-793-12
MODEL ESBK-7041
-B SIDE-

ESBK-7041

FRONT PANEL AND CD-ROM FLOPPY DISK

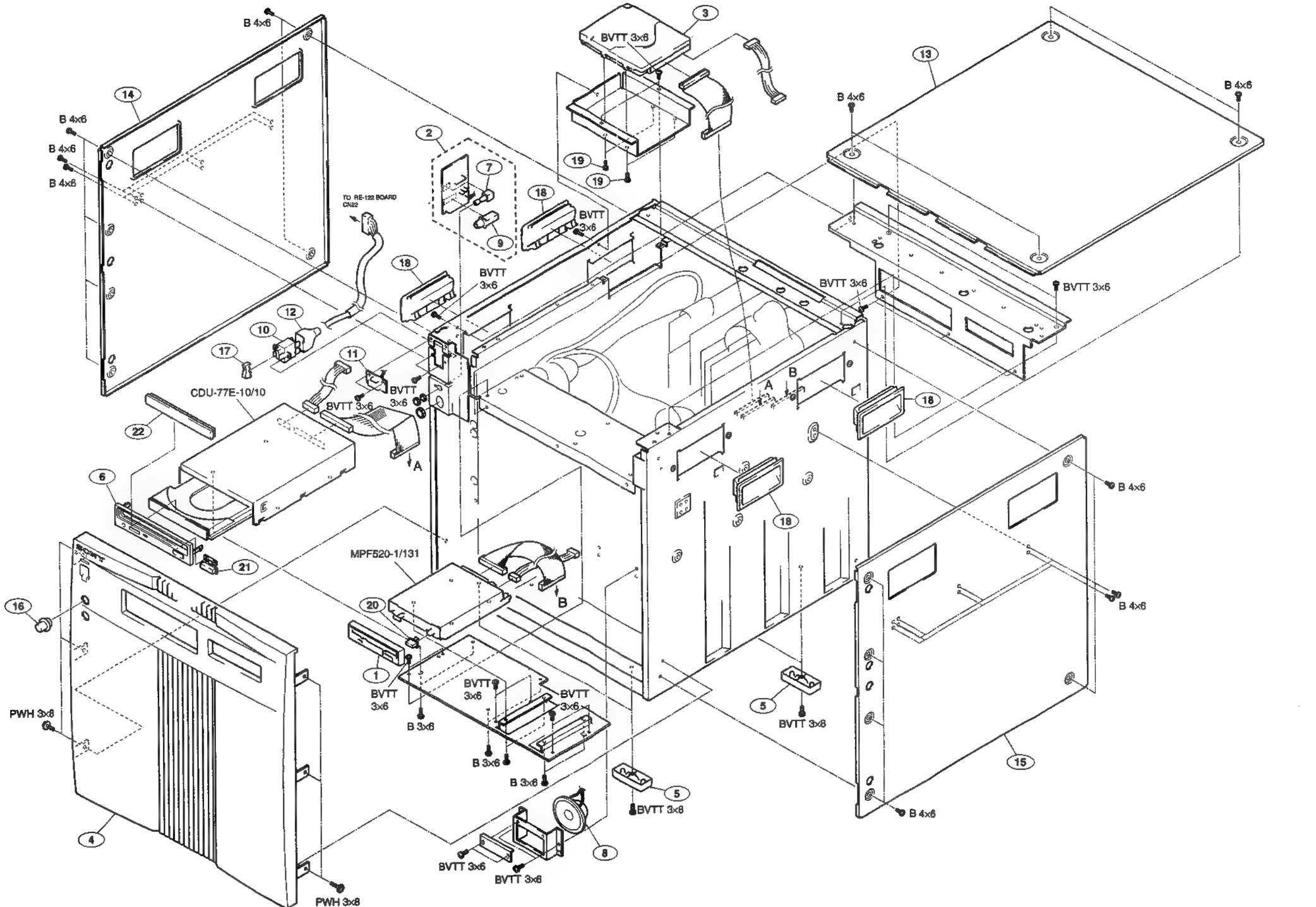

PC ASSY

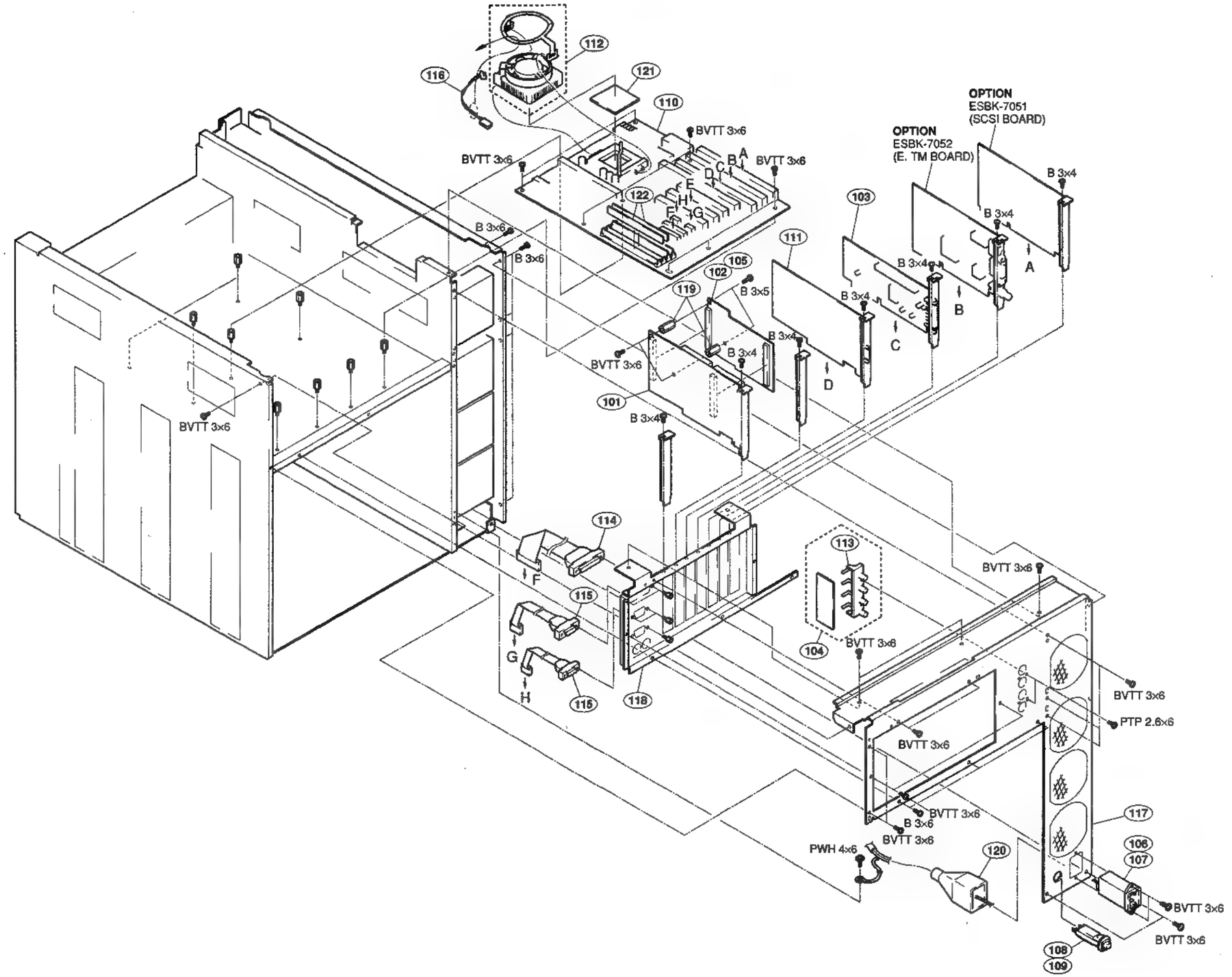
112
116
121
110
BVTT 3x6
BVTT 3x6
BVTT 3x6
A
B
C
D
E
F
G
H
122
B 3x6
B 3x6
OPTION
ESBK-7051
(SCSI BOARD)
OPTION
ESBK-7052
(E. TM BOARD)
B 3x4
B 3x4
103
111
105
102
B 3x5
119
B 3x4
B 3x4
B 3x4
B 3x4
BVTT 3x6
101
B 3x4
BVTT 3x6
114
F
115
G
H
115
118
113
104
BVTT 3x6
BVTT 3x6
BVTT 3x6
PTP 2.6x6
BVTT 3x6
117
B 3x6
BVTT 3x6
PWH 4x6
120
106
107
BVTT 3x6
BVTT 3x6
108
109

PC ASSY

No.	Parts No.	SP	Description
101	A-8273-914-A	o	MOUNTED CIRCUIT BOARD, VPR-18
102	A-8273-915-A	o	MOUNTED CIRCUIT BOARD, DSC-75 (For J,UC)
103	A-8273-916-A	o	MOUNTED CIRCUIT BOARD, BF-54
104	A-8273-937-A	o	MOUNTED CIRCUIT BOARD, CN-1242
105	A-8273-944-A	o	MOUNTED CIRCUIT BOARD, DSC-75A (For CE)
106	⚠1-251-506-11	s	INLET (WITH FILTER) (For J, UC)
107	⚠1-251-507-11	s	INLET (WITH FILTER) (For CE)
108	⚠1-533-570-11	s	BREAKER, CIRCUIT (For J, UC)
109	⚠1-533-630-11	s	BREAKER, CIRCUIT (For CE)
110	*1 1-589-861-11	■	BOARD, PC, MAIN
110	*2 1-761-019-11	s	BOARD, PC, MAIN
111	1-589-888-11	o	BOARD,VGA
112	*1 1-698-827-11	s	FAN, D. C. (WITH HEAT SINK)
112	*2 1-763-027-11	s	FAN, D. C. (WITH HEAT SINK)
113	1-774-966-11	o	CONNECTOR, BNC (RECEPTACLE)
114	1-777-296-11	o	CABLE (WITH CONNECTOR) (25P)
115	1-777-297-11	o	CABLE (WITH CONNECTOR) (9P)
116	1-956-406-11	o	HARNESS, SUB (FAN)
117	3-603-451-02	o	PANEL, REAR
118	3-603-463-01	o	PLATE (2), PC CN
119	3-718-661-01	o	SUPPORT, TC
120	4-601-466-11	s	COVER, 3P INLET
121	*1 8-759-379-37	s	IC A80502-6100
121	*2 8-759-481-25	s	IC FV80502-66200
122	*1 8-749-012-23	s	IC S16265NHC
122	*2 8-749-014-04	o	IC S32265NHC

*1 Serial No. up to 20999 (For J)
Serial No. up to 10999 (For UC)
Serial No. up to 30999 (For CE)

*2 Serial No. 21001 and higher (For J)
Serial No. 11001 and higher (For UC)
Serial No. 31001 and higher (For CE)

WER SUPPLY

POWER SUPPLY

No.	Parts No.	SP	Description
201	A-8273-931-A	o	MOUNTED CIRCUIT BOARD, MB-639
202	A-8273-938-A	o	MOUNTED CIRCUIT BOARD, RE-122 (For J, UC)
203	A-8311-628-A	o	MOUNTED CIRCUIT BOARD, RE-122A (For CE)
204	1-698-779-11	s	FAN, DC
205	1-956-148-11	o	HARNESS, SUB (VPR 1)
206	1-956-149-11	o	HARNESS, SUB (VPR 2)
207	1-956-150-11	o	HARNESS, SUB (BF)
208	1-956-151-11	o	HARNESS, SUB (FP)
209	3-178-164-01	o	RAIL (290), PC BOARD GUIDE

VPR-18 BOARD(ES-7)

Ref. No. or Q'ty	Part No.	SP	Description
1pc	A-8273-914-A	■	MOUNTED CIRCUIT BOARD, VPR-18
2pcs	7-685-871-01	s	SCREW +BVTT 3x6 (S)
2pcs	7-682-546-04	s	SCREW +B 3x5
2pcs	3-718-661-01	o	SUPPORT, TC
C1	1-164-346-11	s	CERAMIC 1uF 16V
C2	1-126-394-11	s	ELECT, CHIP 10uF 20% 16V
C3	1-163-038-91	s	CERAMIC, CHIP 0.1uF 25V
C4	1-126-396-11	■	ELECT, CHIP 47uF 20% 16V
C5	1-163-038-91	s	CERAMIC, CHIP 0.1uF 25V
C6	1-164-346-11	s	CERAMIC 1uF 16V
C7	1-163-038-91	s	CERAMIC, CHIP 0.1uF 25V
C8	1-126-394-11	■	ELECT, CHIP 10uF 20% 16V
C9	1-126-926-11	s	ELECT 1000uF 20% 10V
C10	1-163-038-91	s	CERAMIC, CHIP 0.1uF 25V
C11	1-164-232-11	s	CERAMIC, CHIP 0.01uF 10% 100V
C12	1-126-394-11	s	ELECT, CHIP 10uF 20% 16V
C13	1-163-038-91	■	CERAMIC, CHIP 0.1uF 25V
C14	1-163-038-91	s	CERAMIC, CHIP 0.1uF 25V
C15	1-163-038-91	s	CERAMIC, CHIP 0.1uF 25V
C16	1-163-038-91	s	CERAMIC, CHIP 0.1uF 25V
C17	1-164-232-11	s	CERAMIC, CHIP 0.01uF 10% 100V
C18	1-164-232-11	s	CERAMIC, CHIP 0.01uF 10% 100V
C19	1-164-232-11	s	CERAMIC, CHIP 0.01uF 10% 100V
C20	1-164-232-11	s	CERAMIC, CHIP 0.01uF 10% 100V
C21	1-126-396-11	■	ELECT, CHIP 47uF 20% 16V
C22	1-163-038-91	■	CERAMIC, CHIP 0.1uF 25V
C23	1-163-038-91	s	CERAMIC, CHIP 0.1uF 25V
C24	1-164-232-11	s	CERAMIC, CHIP 0.01uF 10% 100V
C25	1-163-038-91	s	CERAMIC, CHIP 0.1uF 25V
C26	1-163-038-91	■	CERAMIC, CHIP 0.1uF 25V
C27	1-164-232-11	s	CERAMIC, CHIP 0.01uF 10% 100V
C28-33	1-163-038-91	s	CERAMIC, CHIP 0.1uF 25V
C34	1-126-396-11	s	ELECT, CHIP 47uF 20% 16V
C35	1-126-394-11	■	ELECT, CHIP 10uF 20% 16V
C36-43	1-163-038-91	s	CERAMIC, CHIP 0.1uF 25V
C44	1-126-394-11	s	ELECT, CHIP 10uF 20% 16V
C45	1-164-346-11	s	CERAMIC 1uF 16V
C46	1-164-346-11	s	CERAMIC 1uF 16V
C47-51	1-164-232-11	s	CERAMIC, CHIP 0.01uF 10% 100V
C52	1-164-346-11	s	CERAMIC 1uF 16V
C53	1-164-346-11	■	CERAMIC 1uF 16V
C54	1-126-394-11	s	ELECT, CHIP 10uF 20% 16V
C55	1-164-232-11	s	CERAMIC, CHIP 0.01uF 10% 100V
C56	1-164-232-11	s	CERAMIC, CHIP 0.01uF 10% 100V
C57	1-164-346-11	s	CERAMIC 1uF 16V
C58	1-164-346-11	s	CERAMIC 1uF 16V
C59	1-126-394-11	■	ELECT, CHIP 10uF 20% 16V
C60	1-163-038-91	s	CERAMIC, CHIP 0.1uF 25V
C73	1-163-038-91	s	CERAMIC, CHIP 0.1uF 25V
C74	1-163-038-91	s	CERAMIC, CHIP 0.1uF 25V
C75	1-164-346-11	■	CERAMIC 1uF 16V
CN2	1-766-364-11	■	CONNECTOR, BB 100P, HERMAPHRODITE
CN3	1-766-364-11	s	CONNECTOR, ■ 100P, HERMAPHRODITE
CN4	1-566-343-11	o	CONNECTOR, 40P, MALE
CN5	1-566-312-11	s	CONNECTOR, 50P, MALE
DL1	8-759-297-58	s	IC DS1000Z-50
FB1-6	1-239-626-11	s	EMIFIL ARRAY, CHIP

(VPR-18 BOARD(ES-7))

Ref. No. or Q'ty	Part No.	SP	Description
IC1	8-759-359-54	s	IC SN74ALS244CNS-E20
IC2	8-759-386-35	s	IC SN74ABT16374ADL
IC3	8-759-396-68	s	IC CXD8596Q
IC4	8-759-396-67	■	IC CXD8597Q
IC5	8-759-515-12	■	IC SN74ALS574BNS
IC6	8-759-515-12	s	IC SN74ALS574BNS
IC7	8-759-515-12	■	IC SN74ALS574BNS
IC8	8-759-296-24	s	IC CY7C199-20VC
IC9	8-759-296-24	s	IC CY7C199-20VC
IC10	8-759-296-24	■	IC CY7C199-20VC
IC11	8-759-296-24	s	IC CY7C199-20VC
IC14	8-759-298-24	s	IC SN74ALS240ANS-E20
L1	1-500-202-11	■	BEAD, FERRITE
L2	1-402-798-11	s	COIL, CHOKE 22uH
L3	1-500-202-11	s	BEAD, FERRITE
L4	1-500-202-11	s	BEAD, FERRITE
L5	1-500-202-11	■	BEAD, FERRITE
L6	1-500-202-11	s	BEAD, FERRITE
L9	1-500-202-11	s	BEAD, FERRITE
L10	1-500-202-11	■	BEAD, FERRITE
R1	1-216-073-00	s	METAL, CHIP 10k 5% 1/10W
R2	1-216-073-00	■	METAL, CHIP 10k 5% 1/10W
R3-7	1-216-298-00	■	METAL 2.2 5% 1/10W
R35	1-216-009-00	s	METAL, CHIP 22 5% 1/10W
R36	1-216-043-91	s	METAL, CHIP 560 5% 1/10W
R37	1-216-041-00	s	METAL, CHIP 470 5% 1/10W
R38	1-216-043-91	s	METAL, CHIP 560 5% 1/10W
R39	1-216-041-00	s	METAL, CHIP 470 5% 1/10W
R40	1-216-043-91	s	METAL, CHIP 560 5% 1/10W
R41	1-216-041-00	s	METAL, CHIP 470 5% 1/10W
R42	1-216-043-91	s	METAL, CHIP 560 5% 1/10W
R43	1-216-041-00	s	METAL, CHIP 470 5% 1/10W
R44	1-216-073-00	s	METAL, CHIP 10k 5% 1/10W
R45	1-216-073-00	s	METAL, CHIP 10k 5% 1/10W
R46-50	1-216-009-00	s	METAL, CHIP 22 5% 1/10W
R58	1-216-073-00	s	METAL, CHIP 10k 5% 1/10W
R59	1-216-073-00	s	METAL, CHIP 10k 5% 1/10W
R60	1-216-073-00	s	METAL, CHIP 10k 5% 1/10W
R61	1-216-073-00	s	METAL, CHIP 10k 5% 1/10W
R62	1-216-009-00	s	METAL, CHIP 22 5% 1/10W
R63	1-216-009-00	■	METAL, CHIP 22 5% 1/10W
R64	1-216-009-00	s	METAL, CHIP 22 5% 1/10W
R65	1-216-009-00	s	METAL, CHIP 22 5% 1/10W
R67	1-216-009-00	s	METAL, CHIP 22 5% 1/10W
R68	1-216-009-00	s	METAL, CHIP 22 5% 1/10W
R69	1-216-009-00	s	METAL, CHIP 22 5% 1/10W
R71-77	1-216-009-00	s	METAL, CHIP 22 5% 1/10W
R78	1-216-073-00	s	METAL, CHIP 10k 5% 1/10W
R79	1-216-073-00	s	METAL, CHIP 10k 5% 1/10W
R80	1-216-043-91	s	METAL, CHIP 560 5% 1/10W
R81	1-216-043-91	s	METAL, CHIP 560 5% 1/10W
R83	1-216-009-00	s	METAL, CHIP 22 5% 1/10W
R84	1-216-009-00	s	METAL, CHIP 22 5% 1/10W
R85	1-216-073-00	s	METAL, CHIP 10k 5% 1/10W
R107	1-216-073-00	s	METAL, CHIP 10k 5% 1/10W
R132	1-216-073-00	s	METAL, CHIP 10k 5% 1/10W
R135	1-216-041-00	s	METAL, CHIP 470 5% 1/10W

(VPR-18 BOARD(ES-7))

Ref. No. or Q'ty	Part No.	SP	Description
R136	1-216-043-91	■	METAL, CHIP 560 5% 1/10W
R137	1-216-009-00	■	METAL, CHIP 22 5% 1/10W
R138	1-216-009-00	■	METAL, CHIP 22 5% 1/10W
R139-143	1-216-073-00	■	METAL, CHIP 10k 5% 1/10W
R144	1-216-009-00	s	METAL, CHIP 22 5% 1/10W
R145	1-216-009-00	■	METAL, CHIP 22 5% 1/10W
R146	1-216-009-00	s	METAL, CHIP 22 5% 1/10W
R147	1-216-009-00	s	METAL, CHIP 22 5% 1/10W
R151	1-216-009-00	■	METAL, CHIP 22 5% 1/10W
R152	1-216-298-00	s	METAL 2.2 5% 1/10W
R153	1-216-009-00	s	METAL, CHIP 22 5% 1/10W
R156	1-216-043-91	s	METAL, CHIP 560 5% 1/10W
R157	1-216-043-91	s	METAL, CHIP 560 5% 1/10W
R192	1-216-073-00	s	METAL, CHIP 10k 5% 1/10W
R193	1-216-009-00	■	METAL, CHIP 22 5% 1/10W
R195	1-216-073-00	■	METAL, CHIP 10k 5% 1/10W
R196	1-216-073-00	■	METAL, CHIP 10k 5% 1/10W
R197-202	1-216-009-00	■	METAL, CHIP 22 5% 1/10W
RB1-6	1-239-621-11	s	RESISTOR BLOCK, CHIP 22x4
RB21-26	1-236-908-11	s	RESISTOR BLOCK, CHIP 10kx4
TP8	1-535-757-11	s	TERMINAL, TP
TP9	1-535-757-11	s	TERMINAL, TP
TP10	1-535-757-11	s	TERMINAL, TP
TP12-16	1-535-757-11	s	TERMINAL, TP

Note: The parts with * marked are design-chanded.
Applicabie serial numbers are as follows;

#1: Serial No.; up to 10999 (for UC)
; up to 20999 (for J)
; up to 30999 (for CE)

#2: Serial No.; 11001 and higher (for UC)
; 21001 and higher (for J)
; 31001 and higher (for CE)

MPU-95 BOARD(ESBK-7041) board suffix number -12

Ref. No. or Q'ty	Part No.	SP	Description
1pc	A-8311-015-A	o	MOUNTED CIRCUIT BOARD, MPU-95
1pc	1-528-749-11	s	BATTERY, MOLD TYPE
1pc	3-172-089-01	o	HANDLE
1pc	3-603-856-01	o	PLATE,MPU CN
8pcs	3-696-947-11	s	SCREW(+B2.5)
1pc	3-696-948-11	s	PRECISION SCREW(+P2.5X6)
1pc	7-682-947-01	s	SCREW +PSW 3x6
1pc	7-682-948-01	s	SCREW +PSW 3x8
1pc	7-685-862-09	s	SCREW +BVTT 2.6x6 (S)
C1	1-126-396-11	s	ELECT, CHIP 47uF 20% 16V
C2	1-163-038-91	s	CERAMIC, CHIP 0.1uF 25V
C3	1-126-396-11	s	ELECT, CHIP 47uF 20% 16V
C4	1-163-038-91	s	CERAMIC, CHIP 0.1uF 25V
C5	1-126-396-11	s	ELECT, CHIP 47uF 20% 16V
C6	1-126-396-11	s	ELECT, CHIP 47uF 20% 16V
C101-105	1-126-401-11	s	ELECT, CHIP 1uF 20% 50V
C108	1-163-038-91	s	CERAMIC, CHIP 0.1uF 25V
C109	1-126-401-11	s	ELECT, CHIP 1uF 20% 50V
C110-113	1-163-038-91	s	CERAMIC, CHIP 0.1uF 25V
C114	1-126-396-11	s	ELECT, CHIP 47uF 20% 16V
C115-123	1-163-038-91	■	CERAMIC, CHIP 0.1uF 25V
C124	1-126-396-11	s	ELECT, CHIP 47uF 20% 16V
C125	1-163-038-91	■	CERAMIC, CHIP 0.1uF 25V
C126	1-126-396-11	s	ELECT, CHIP 47uF 20% 16V
C127	1-163-038-91	s	CERAMIC, CHIP 0.1uF 25V
C128	1-126-396-11	s	ELECT, CHIP 47uF 20% 16V
C129	1-163-038-91	s	CERAMIC, CHIP 0.1uF 25V
C130	1-126-396-11	s	ELECT, CHIP 47uF 20% 16V
C131-142	1-163-038-91	s	CERAMIC, CHIP 0.1uF 25V
C147	1-163-038-91	■	CERAMIC, CHIP 0.1uF 25V
C148	1-163-038-91	s	CERAMIC, CHIP 0.1uF 25V
C203-206	1-163-038-91	■	CERAMIC, CHIP 0.1uF 25V
C207	1-126-396-11	■	ELECT, CHIP 47uF 20% 16V
C208-227	1-163-038-91	■	CERAMIC, CHIP 0.1uF 25V
C229	1-163-038-91	■	CERAMIC, CHIP 0.1uF 25V
C303-306	1-163-038-91	s	CERAMIC, CHIP 0.1uF 25V
C307	1-126-396-11	s	ELECT, CHIP 47uF 20% 16V
C308-317	1-163-038-91	■	CERAMIC, CHIP 0.1uF 25V
C318	1-126-394-11	s	ELECT, CHIP 10uF 20% 16V
C319	1-163-038-91	s	CERAMIC, CHIP 0.1uF 25V
C320	1-126-394-11	s	ELECT, CHIP 10uF 20% 16V
C321-329	1-163-038-91	s	CERAMIC, CHIP 0.1uF 25V
C330	1-163-037-11	s	CERAMIC, CHIP 0.022uF 10% 25V
C331	1-163-038-91	s	CERAMIC, CHIP 0.1uF 25V
C332	1-163-038-91	s	CERAMIC, CHIP 0.1uF 25V
C401	1-163-038-91	■	CERAMIC, CHIP 0.1uF 25V
C402	1-126-394-11	s	ELECT, CHIP 10uF 20% 16V
C403-405	1-163-038-91	s	CERAMIC, CHIP 0.1uF 25V
C406	1-126-396-11	s	ELECT, CHIP 47uF 20% 16V
C407	1-126-396-11	s	ELECT, CHIP 47uF 20% 16V
C408-416	1-163-038-91	s	CERAMIC, CHIP 0.1uF 25V
C417	1-126-396-11	s	ELECT, CHIP 47uF 20% 16V
C418	1-126-396-11	s	ELECT, CHIP 47uF 20% 16V
C419	1-163-038-91	s	CERAMIC, CHIP 0.1uF 25V
C420	1-126-396-11	■	ELECT, CHIP 47uF 20% 16V
C501	1-163-038-91	s	CERAMIC, CHIP 0.1uF 25V
C502	1-126-394-11	s	ELECT, CHIP 10uF 20% 16V
C503-505	1-163-038-91	s	CERAMIC, CHIP 0.1uF 25V
C506	1-126-396-11	■	ELECT, CHIP 47uF 20% 16V

(MPU-95 BOARD(ESBK-7041) board suffix number -12)

Ref. No. or Q'ty	Part No.	SP	Description
C507	1-126-396-11	s	ELECT, CHIP 47uF 20% 16V
C508-513	1-163-038-91	■	CERAMIC, CHIP 0.1uF 25V
C514	1-126-396-11	s	ELECT, CHIP 47uF 20% 16V
C515	1-126-396-11	s	ELECT, CHIP 47uF 20% 16V
C516	1-163-038-91	s	CERAMIC, CHIP 0.1uF 25V
C517	1-126-396-11	s	ELECT, CHIP 47uF 20% 16V
C601	1-163-038-91	s	CERAMIC, CHIP 0.1uF 25V
C602	1-126-394-11	■	ELECT, CHIP 10uF 20% 16V
C603-605	1-163-038-91	■	CERAMIC, CHIP 0.1uF 25V
C606	1-126-396-11	s	ELECT, CHIP 47uF 20% 16V
C607	1-126-396-11	s	ELECT, CHIP 47uF 20% 16V
C608-613	1-163-038-91	■	CERAMIC, CHIP 0.1uF 25V
C614	1-126-396-11	■	ELECT, CHIP 47uF 20% 16V
C615	1-126-396-11	■	ELECT, CHIP 47uF 20% 16V
C616-618	1-163-038-91	s	CERAMIC, CHIP 0.1uF 25V
C619	1-126-396-11	s	ELECT, CHIP 47uF 20% 16V
C701	1-126-394-11	s	ELECT, CHIP 10uF 20% 16V
C702	1-126-394-11	s	ELECT, CHIP 10uF 20% 16V
C703-706	1-163-038-91	s	CERAMIC, CHIP 0.1uF 25V
C707	1-126-394-11	■	ELECT, CHIP 10uF 20% 16V
C708	1-163-038-91	s	CERAMIC, CHIP 0.1uF 25V
C709	1-126-396-11	■	ELECT, CHIP 47uF 20% 16V
C710	1-163-038-91	s	CERAMIC, CHIP 0.1uF 25V
C711	1-163-038-91	s	CERAMIC, CHIP 0.1uF 25V
C712	1-126-396-11	s	ELECT, CHIP 47uF 20% 16V
C713-720	1-163-038-91	s	CERAMIC, CHIP 0.1uF 25V
C721	1-126-396-11	s	ELECT, CHIP 47uF 20% 16V
C722	1-126-396-11	■	ELECT, CHIP 47uF 20% 16V
C723-729	1-163-038-91	s	CERAMIC, CHIP 0.1uF 25V
C730	1-126-396-11	■	ELECT, CHIP 47uF 20% 16V
C731	1-126-396-11	s	ELECT, CHIP 47uF 20% 16V
C901	1-163-038-91	s	CERAMIC, CHIP 0.1uF 25V
C902	1-126-394-11	s	ELECT, CHIP 10uF 20% 16V
C903-909	1-163-038-91	s	CERAMIC, CHIP 0.1uF 25V
C910	1-126-396-11	s	ELECT, CHIP 47uF 20% 16V
C911	1-126-396-11	s	ELECT, CHIP 47uF 20% 16V
C912	1-163-038-91	s	CERAMIC, CHIP 0.1uF 25V
C913	1-163-038-91	s	CERAMIC, CHIP 0.1uF 25V
CN111	1-564-004-11	■	CONNECTOR 5P, MALE
CN112	1-564-002-11	s	CONNECTOR 3P, MALE
CN201-203	1-778-261-11	o	CONNECTOR, BB 124P, MALE
CN211	1-506-470-11	s	CONNECTOR 5P, MALE
CN212	1-506-468-11	■	CONNECTOR 3P, MALE
CN213	1-506-471-11	s	CONNECTOR 6P, MALE
CN311	1-506-470-11	s	CONNECTOR 5P, MALE
CN401	1-770-231-11	o	CONNECTOR, D-HALF 50P, MALE
CN501	1-770-231-11	■	CONNECTOR, D-HALF 50P, MALE
CN601	1-770-231-11	■	CONNECTOR, D-HALF 50P, MALE
CN701	1-770-231-11	o	CONNECTOR, D-HALF 50P, MALE
CNI111	1-526-660-21	o	SOCKET, IC 32P
CNI208	1-526-660-21	o	SOCKET, IC 32P
CNI209	1-526-660-21	o	SOCKET, IC 32P
CNI303	1-526-660-21	o	SOCKET, IC 32P
CNI304	1-526-660-21	o	SOCKET, IC 32P
CNI314	1-540-069-11	s	SOCKET, IC (IC113) 84P
D101-108	8-719-026-16	s	DIODE CL-150D-CD

(MPU-95 BOARD(ESBK-7041) board suffix number -12)

Ref. No. or Q'ty	Part No.	SP	Description
D201-203	8-719-026-16	■	DIODE CL-150D-CD
D301-308	8-719-026-16	■	DIODE CL-150D-CD
F1	⚠ 1-576-260-51	s	FUSE 10A 125V
FB201-226	1-500-202-11	■	BEAD, FERRITE
FB301-304	1-500-202-11	s	BEAD, FERRITE
FB401	1-500-202-11	■	BEAD, FERRITE
FB501	1-500-202-11	■	BEAD, FERRITE
FB601	1-500-202-11	s	BEAD, FERRITE
FB701-703	1-500-202-11	s	BEAD, FERRITE
FL301-306	1-239-719-11	s	FILTER, NOISE, CHIP
FL401-418	1-239-719-11	s	FILTER, NOISE, CHIP
FL501-518	1-239-719-11	s	FILTER, NOISE, CHIP
FL601-618	1-239-719-11	■	FILTER, NOISE, CHIP
FL701-737	1-239-719-11	■	FILTER, NOISE, CHIP
IC101	8-759-296-67	s	IC HD6417032F20
IC103	8-759-043-33	■	IC LB1721M
IC104	8-759-369-92	■	IC M51958AFP600D
IC105	8-759-081-44	■	IC TC74VHC04F
IC106	8-759-186-38	s	IC TC74VHC32F
IC107	8-759-521-15	■	IC MAX232CWE
IC108	8-759-186-47	■	IC TC74VHC138F
IC109	8-759-186-47	■	IC TC74VHC138F
IC110	8-759-186-49	■	IC TC74VHC139F
IC111	8-759-477-64	o	IC 27C1001-ES7DRHDV101, EPROM
IC112	8-759-479-06	s	IC AM29F200AB-70EC, FLASH
IC113	8-759-479-06	s	IC AM29F200AB-70EC, FLASH
IC114	8-759-296-24	s	IC CY7C199-20VC
IC115	8-759-296-24	s	IC CY7C199-20VC
IC116	8-759-175-29	s	IC TC74VHC374F
IC117	8-759-186-49	■	IC TC74VHC139F
IC118	8-759-341-64	s	IC UPD4218160LE-60
IC118	8-759-380-51	s	IC TMS418160-60DZ
IC119	8-759-341-64	s	IC UPD4218160LE-60
IC119	8-759-380-51	s	IC TMS418160-60DZ
IC122	8-759-081-44	s	IC TC74VHC04F
IC123	8-759-186-39	■	IC TC74VHC74F
IC124	8-759-186-77	s	IC TC74VHC541F
IC125	8-759-186-77	s	IC TC74VHC541F
IC126	8-759-186-63	■	IC TC74VHC245F
IC127	8-759-186-63	s	IC TC74VHC245F
IC128	8-759-399-65	s	IC M48Z58Y-70MH1TR
IC129	8-759-095-41	s	IC CXD8176AQ
IC130	8-759-053-58	s	IC IDT6116SA25SO
IC131	8-759-081-48	s	IC TC74VHC08F
IC132	8-759-081-48	■	IC TC74VHC08F
IC201	8-759-371-00	s	IC HD6437021C02X

(MPU-95 BOARD (ESBK-7041) board suffix number -12)

Ref. No. or Q'ty	Part No.	SP	Description
IC202	8-759-061-67	s	IC MC34051M
IC204	8-759-300-71	s	IC HD14053BFP
IC205	8-759-043-33	s	IC LB1721M
IC206	8-759-925-76	s	IC SN74HC08ANS
IC207	8-759-186-47	s	IC TC74VHC138F
IC208	8-759-477-65	o	IC 27C1001-ES7DRS1V100, EPROM
IC209	8-759-477-66	o	IC 27C1001-ES7DRS2V100, EPROM
IC210	8-759-296-24	■	IC CY7C199-20VC
IC211	8-759-296-24	s	IC CY7C199-20VC
IC212-214	8-759-186-77	■	IC TC74VHC541F
IC215	8-759-186-63	s	IC TC74VHC245F
IC216	8-759-186-63	s	IC TC74VHC245F
IC217	8-759-186-29	s	IC TC74VHC11F
IC218	8-759-095-41	■	IC CXD8176AQ
IC219	8-759-053-58	s	IC IDT6116SA25SO
IC220	8-759-939-92	s	IC SN74ALS541NS
IC221	8-759-939-92	■	IC SN74ALS541NS
IC222	8-759-947-45	■	IC SN74ALS245ANS
IC223	8-759-933-99	s	IC SN74ALS09NS
IC224	8-759-175-29	s	IC TC74VHC374F
IC301	8-759-371-00	s	IC HD6437021C02X
IC302	8-759-043-33	■	IC LB1721M
IC303	8-759-477-67	o	IC 27C1001-ES7DRB1V102, EPROM
IC304	8-759-477-68	o	IC 27C1001-ES7DRB2V102, EPROM
IC305	8-759-254-78	■	IC CY7C185-25VCTEL
IC306	8-759-254-78	■	IC CY7C185-25VCTEL
IC307	8-759-186-77	s	IC TC74VHC541F
IC308	8-759-186-77	s	IC TC74VHC541F
IC309	8-759-186-63	■	IC TC74VHC245F
IC310	8-759-095-41	s	IC CXD8176AQ
IC311	8-759-053-58	■	IC IDT6116SA25SO
IC312	8-759-934-41	s	IC SN74ALS240ANS
IC313	8-759-934-41	s	IC SN74ALS240ANS
IC315	8-759-186-63	s	IC TC74VHC245F
IC316	8-759-186-63	s	IC TC74VHC245F
IC317	8-759-053-58	■	IC IDT6116SA25SO
IC318	8-759-053-58	s	IC IDT6116SA25SO
IC319-322	8-759-515-09	s	IC SN74ALS374ANS
IC323	8-759-359-54	■	IC SN74ALS244CNS-E20
IC324	8-759-239-55	■	IC TC74HC123AF
IC401	8-759-347-01	s	IC TK11230AMTL
IC403	8-759-341-64	s	IC UPD4218160LE-60
IC403	8-759-380-51	s	IC TMS418160-60DZ
IC404	8-759-341-64	s	IC UPD4218160LE-60
IC404	8-759-380-51	s	IC TMS418160-60DZ
IC405	8-759-368-65	s	IC SYM53CF96-2
IC406	8-749-010-87	s	HIC BP3510
IC407	8-759-947-45	s	IC SN74ALS245ANS
IC408	8-759-947-45	s	IC SN74ALS245ANS
IC409	8-759-359-54	s	IC SN74ALS244CNS-E20
IC501	8-759-347-01	s	IC TK11230AMTL
IC503	8-759-341-64	s	IC UPD4218160LE-60
IC503	8-759-380-51	s	IC TMS418160-60DZ
IC504	8-759-341-64	s	IC UPD4218160LE-60
IC504	8-759-380-51	s	IC TMS418160-60DZ
IC505	8-759-368-65	s	IC SYM53CF96-2

(MPU-95 BOARD(ESBK-7041) board suffix number -12)

Ref. No. or Q'ty	Part No.	SP	Description
IC506	8-749-010-87	s	HIC BP3510
IC601	8-759-347-01	s	IC TK11230AMTL
IC603	8-759-341-64	s	IC UPD4218160LE-60
IC603	8-759-380-51	■	IC TMS418160-60DZ
IC604	8-759-341-64	s	IC UPD4218160LE-60
IC604	8-759-380-51	s	IC TMS418160-60DZ
IC605	8-759-368-65	■	IC SYM53CF96-2
IC606	8-749-010-87	s	HIC BP3510
IC701	8-759-347-01	s	IC TK11230AMTL
IC703	8-759-341-64	s	IC UPD4218160LE-60
IC703	8-759-380-51	s	IC TMS418160-60DZ
IC704	8-759-341-64	s	IC UPD4218160LE-60
IC704	8-759-380-51	s	IC TMS418160-60DZ
IC705	8-759-368-65	s	IC SYM53CF96-2
IC706	8-749-010-87	s	HIC BP3510
IC710	8-759-515-09	s	IC SN74ALS374ANS
IC711	8-759-081-44	■	IC TC74VHC04F
IC712	8-759-186-39	s	IC TC74VHC74F
IC713	8-759-033-02	s	IC MC74F04M
IC714	8-759-033-02	s	IC MC74F04M
IC901	8-759-347-01	s	IC TK11230AMTL
IC903	8-759-371-04	■	IC HM514260CJ7-Z
IC904	8-759-371-04	■	IC HM514260CJ7-Z
L1-4	1-412-520-11	■	INDUCTOR 3.9uH
L401	1-410-381-11	■	INDUCTOR, CHIP 10uH
L402	1-410-381-11	s	INDUCTOR, CHIP 10uH
L501	1-410-381-11	s	INDUCTOR, CHIP 10uH
L502	1-410-381-11	s	INDUCTOR, CHIP 10uH
L601	1-410-381-11	s	INDUCTOR, CHIP 10uH
L602	1-410-381-11	■	INDUCTOR, CHIP 10uH
L701	1-410-381-11	s	INDUCTOR, CHIP 10uH
L702	1-410-381-11	s	INDUCTOR, CHIP 10uH
L901	1-410-381-11	s	INDUCTOR, CHIP 10uH
Q401	8-729-111-14	s	TRANSISTOR 2SA1385-Z-L
Q402	8-729-216-22	s	TRANSISTOR 2SA1162
Q501	8-729-111-14	s	TRANSISTOR 2SA1385-Z-L
Q502	8-729-216-22	■	TRANSISTOR 2SA1162
Q601	8-729-111-14	s	TRANSISTOR 2SA1385-Z-L
Q602	8-729-216-22	s	TRANSISTOR 2SA1162
Q701	8-729-111-14	s	TRANSISTOR 2SA1385-Z-L
Q702	8-729-216-22	s	TRANSISTOR 2SA1162
R101-110	1-216-089-91	s	METAL, CHIP 47k 5% 1/10W
R111	1-216-295-91	s	RES, CHIP 0
R113	1-216-295-91	s	RES, CHIP 0
R115	1-216-049-91	s	METAL, CHIP 1k 5% 1/10W
R116	1-216-089-91	s	METAL, CHIP 47k 5% 1/10W
R117	1-216-065-00	s	METAL, CHIP 4.7K 5% 1/10W
R118	1-216-085-00	s	METAL, CHIP 33K 5% 1/10W
R119	1-216-089-91	s	METAL, CHIP 47k 5% 1/10W
R120	1-216-077-00	s	METAL, CHIP 15K 5% 1/10W
R121	1-216-089-91	■	METAL, CHIP 47k 5% 1/10W
R122	1-216-089-91	s	METAL, CHIP 47k 5% 1/10W
R132	1-216-089-91	■	METAL, CHIP 47k 5% 1/10W
R133	1-216-089-91	■	METAL, CHIP 47k 5% 1/10W
R201	1-216-097-91	s	METAL, CHIP 100k 5% 1/10W
R202	1-216-089-91	s	METAL, CHIP 47k 5% 1/10W
R203	1-216-089-91	s	METAL, CHIP 47k 5% 1/10W
R204	1-216-077-00	s	METAL, CHIP 15K 5% 1/10W

(MPU-95 BOARD(ESBK-7041) board suffix number -12)

Ref. No. or Q'ty	Part No.	SP	Description
R205	1-216-077-00	s	METAL, CHIP 15K 5% 1/10W
R206	1-216-097-91	s	METAL, CHIP 100k 5% 1/10W
R207	1-216-089-91	s	METAL, CHIP 47k 5% 1/10W
R208-210	1-216-045-00	s	METAL, CHIP 680 5% 1/10W
R211-214	1-216-295-91	■	RES, CHIP 0
R215	1-216-049-91	s	METAL, CHIP 1k 5% 1/10W
R216-218	1-216-089-91	s	METAL, CHIP 47k 5% 1/10W
R219	1-216-049-91	s	METAL, CHIP 1k 5% 1/10W
R220-225	1-216-089-91	s	METAL, CHIP 47k 5% 1/10W
R226	1-216-049-91	■	METAL, CHIP 1k 5% 1/10W
R301-305	1-216-089-91	s	METAL, CHIP 47k 5% 1/10W
R306-313	1-216-045-00	s	METAL, CHIP 680 5% 1/10W
R314	1-216-295-91	■	RES, CHIP 0
R315	1-216-295-91	■	RES, CHIP 0
R317	1-216-295-91	s	RES, CHIP 0
R318-327	1-216-049-91	s	METAL, CHIP 1k 5% 1/10W
R333-339	1-216-009-00	■	METAL, CHIP 22 5% 1/10W
R340	1-216-089-91	s	METAL, CHIP 47k 5% 1/10W
R341	1-216-049-91	■	METAL, CHIP 1k 5% 1/10W
R342	1-216-049-91	s	METAL, CHIP 1k 5% 1/10W
R343	1-216-009-00	s	METAL, CHIP 22 5% 1/10W
R344	1-216-295-91	■	RES, CHIP 0
R345	1-216-295-91	s	RES, CHIP 0
R401	1-216-295-91	s	RES, CHIP 0
R402	1-216-295-91	■	RES, CHIP 0
R403-405	1-216-065-00	■	METAL, CHIP 4.7K 5% 1/10W
R407	1-216-037-00	s	METAL, CHIP 330 5% 1/10W
R409	1-216-039-00	s	METAL, CHIP 390 5% 1/10W
R410	1-216-073-00	s	METAL, CHIP 10K 5% 1/10W
R411	1-216-073-00	s	METAL, CHIP 10K 5% 1/10W
R414	1-216-073-00	s	METAL, CHIP 10K 5% 1/10W
R415	1-216-073-00	s	METAL, CHIP 10K 5% 1/10W
R416	1-216-365-00	s	METAL 0.47 5% 2W
R417	1-216-075-00	s	METAL, CHIP 12K 5% 1/10W
R418	1-216-689-11	s	METAL, CHIP 39K 0.5% 1/10W
R419	1-216-037-00	■	METAL, CHIP 330 5% 1/10W
R501	1-216-295-91	s	RES, CHIP 0
R502	1-216-295-91	■	RES, CHIP 0
R503-505	1-216-065-00	s	METAL, CHIP 4.7K 5% 1/10W
R506	1-216-073-00	s	METAL, CHIP 10K 5% 1/10W
R507	1-216-073-00	s	METAL, CHIP 10K 5% 1/10W
R512	1-216-037-00	s	METAL, CHIP 330 5% 1/10W
R513	1-216-039-00	s	METAL, CHIP 390 5% 1/10W
R516	1-216-365-00	s	METAL 0.47 5% 2W
R517	1-216-075-00	s	METAL, CHIP 12K 5% 1/10W
R518	1-216-689-11	s	METAL, CHIP 39K 0.5% 1/10W
R519	1-216-037-00	s	METAL, CHIP 330 5% 1/10W
R601	1-216-295-91	s	RES, CHIP 0
R602	1-216-295-91	s	RES, CHIP 0
R603-605	1-216-065-00	s	METAL, CHIP 4.7K 5% 1/10W
R606	1-216-073-00	s	METAL, CHIP 10K 5% 1/10W
R607	1-216-073-00	s	METAL, CHIP 10K 5% 1/10W
R608	1-216-037-00	s	METAL, CHIP 330 5% 1/10W
R609	1-216-039-00	s	METAL, CHIP 390 5% 1/10W
R616	1-216-365-00	s	METAL 0.47 5% 2W
R617	1-216-075-00	s	METAL, CHIP 12K 5% 1/10W
R618	1-216-689-11	s	METAL, CHIP 39K 0.5% 1/10W
R619	1-216-037-00	s	METAL, CHIP 330 5% 1/10W
R701	1-216-037-00	s	METAL, CHIP 330 5% 1/10W

(MPU-95 BOARD(ESBK-7041) board suffix number -12)

Ref. No. or Q'ty	Part No.	SP	Description
R702	1-216-039-00	s	METAL, CHIP 390 5% 1/10W
R716	1-216-365-00	s	METAL 0.47 5% 2W
R717	1-216-075-00	s	METAL, CHIP 12K 5% 1/10W
R718	1-216-689-11	s	METAL, CHIP 39K 0.5% 1/10W
R719	1-216-037-00	s	METAL, CHIP 330 5% 1/10W
R765	1-216-009-00	s	METAL, CHIP 22 5% 1/10W
R766	1-216-009-00	s	METAL, CHIP 22 5% 1/10W
R799	1-216-009-00	s	METAL, CHIP 22 5% 1/10W
R800	1-216-009-00	s	METAL, CHIP 22 5% 1/10W
R801	1-216-295-91	s	RES, CHIP 0
R808-810	1-216-065-00	s	METAL, CHIP 4.7K 5% 1/10W
R811	1-216-073-00	s	METAL, CHIP 10K 5% 1/10W
R812	1-216-073-00	s	METAL, CHIP 10K 5% 1/10W
R813	1-216-009-00	s	METAL, CHIP 22 5% 1/10W
R814	1-216-013-00	s	METAL, CHIP 33 5% 1/10W
R817	1-216-009-00	s	METAL, CHIP 22 5% 1/10W
R819	1-216-009-00	s	METAL, CHIP 22 5% 1/10W
R820	1-216-627-11	s	METAL, CHIP 100 0.5% 1/10W
R821-825	1-216-009-00	s	METAL, CHIP 22 5% 1/10W
R826	1-216-037-00	■	METAL, CHIP 330 5% 1/10W
R827	1-216-039-00	s	METAL, CHIP 390 5% 1/10W
R828	1-216-639-11	s	METAL, CHIP 330 0.5% 1/10W
R901	1-216-295-91	■	RES, CHIP 0
R902	1-216-295-91	■	RES, CHIP 0
R903-905	1-216-065-00	■	METAL, CHIP 4.7K 5% 1/10W
RB101	1-239-308-11	s	RESISTOR BLOCK, CHIP 47kx8
RB102-112	1-239-305-11	s	RESISTOR BLOCK, CHIP 4.7kx8
RB201-205	1-239-305-11	s	RESISTOR BLOCK, CHIP 4.7kx8
RB301-307	1-239-305-11	■	RESISTOR BLOCK, CHIP 4.7kx8
RB701-709	1-239-621-11	s	RESISTOR BLOCK, CHIP 22x4
RB710-712	1-239-388-91	s	RESISTOR BLOCK, CHIP 68x4
RB713	1-239-305-11	■	RESISTOR BLOCK, CHIP 4.7kx8
RB714	1-239-305-11	s	RESISTOR BLOCK, CHIP 4.7kx8
RB717	1-239-305-11	s	RESISTOR BLOCK, CHIP 4.7kx8
S101	1-571-787-31	s	SWITCH, PUSH
S102	1-570-623-11	s	SWITCH, DIP 8-CKT
S201	1-692-504-11	s	SWITCH, SLIDE
S301	1-570-623-11	s	SWITCH, DIP 8-CKT
X701	1-579-448-21	■	OSCILLATOR, CRYSTAL 40.00MHz
X702	1-760-568-21	s	OSC, CRYSTAL, CHIP 53.203425MHz

RP-89/89A BOARD(ESBK-7041) board suffix number -12

Ref. No. or Q'ty	Part No.	SP	Description
1pc	A-8311-017-A	o	MOUNTED CIRCUIT BOARD, RP-89 [for NTSC]
1pc	A-8311-019-A	o	MOUNTED CIRCUIT BOARD, RP-89A [for PAL]
1pc	3-172-089-01	o	HANDLE
1pc	7-682-947-01	s	SCREW +PSW 3x6
1pc	7-682-948-01	s	SCREW +PSW 3x8
1pc	7-685-862-09	s	SCREW +BVTT 2.6x6 (S)
C1	1-163-038-91	s	CERAMIC, CHIP 0.1uF 25V
C2	1-126-392-11	s	ELECT, CHIP 100uF 20% 6.3V
C3	1-163-038-91	s	CERAMIC, CHIP 0.1uF 25V
C4-7	1-126-392-11	■	ELECT, CHIP 100uF 20% 6.3V
C8-17	1-163-038-91	s	CERAMIC, CHIP 0.1uF 25V
C18-27	1-126-396-11	s	ELECT, CHIP 47uF 20% 16V
C28-36	1-163-038-91	s	CERAMIC, CHIP 0.1uF 25V
C37	1-126-398-11	■	ELECT, CHIP 4.7uF 20% 35V
C38	1-163-038-91	s	CERAMIC, CHIP 0.1uF 25V
C39	1-126-398-11	■	ELECT, CHIP 4.7uF 20% 35V
C40-43	1-163-038-91	s	CERAMIC, CHIP 0.1uF 25V
C44	1-126-398-11	s	ELECT, CHIP 4.7uF 20% 35V
C45	1-126-398-11	s	ELECT, CHIP 4.7uF 20% 35V
C46	1-126-392-11	s	ELECT, CHIP 100uF 20% 6.3V
C47	1-163-038-91	s	CERAMIC, CHIP 0.1uF 25V
C48	1-163-038-91	s	CERAMIC, CHIP 0.1uF 25V
C49	1-126-392-11	s	ELECT, CHIP 100uF 20% 6.3V
C50	1-163-038-91	s	CERAMIC, CHIP 0.1uF 25V
C101-112	1-163-038-91	s	CERAMIC, CHIP 0.1uF 25V
C113	1-126-393-11	s	ELECT, CHIP 33uF 20% 10V
C114	1-126-393-11	s	ELECT, CHIP 33uF 20% 10V
C115	1-163-038-91	s	CERAMIC, CHIP 0.1uF 25V
C116	1-163-038-91	■	CERAMIC, CHIP 0.1uF 25V
C117	1-126-396-11	■	ELECT, CHIP 47uF 20% 16V
C118-121	1-163-038-91	s	CERAMIC, CHIP 0.1uF 25V
C122	1-126-396-11	s	ELECT, CHIP 47uF 20% 16V
C123	1-163-038-91	s	CERAMIC, CHIP 0.1uF 25V
C124	1-163-251-11	s	CERAMIC, CHIP 100PF 5% 50V
C125	1-163-038-91	s	CERAMIC, CHIP 0.1uF 25V
C126	1-126-396-11	s	ELECT, CHIP 47uF 20% 16V
C127	1-163-251-11	s	CERAMIC, CHIP 100PF 5% 50V
C128	1-163-038-91	■	CERAMIC, CHIP 0.1uF 25V
C130	1-163-038-91	s	CERAMIC, CHIP 0.1uF 25V
C132	1-163-038-91	s	CERAMIC, CHIP 0.1uF 25V
C134	1-163-038-91	■	CERAMIC, CHIP 0.1uF 25V
C135	1-163-038-91	s	CERAMIC, CHIP 0.1uF 25V
C139	1-163-038-91	■	CERAMIC, CHIP 0.1uF 25V
C142	1-126-396-11	s	ELECT, CHIP 47uF 20% 16V
C144	1-163-275-11	s	CERAMIC, CHIP 0.001uF 5% 50V
C145	1-163-275-11	s	CERAMIC, CHIP 0.001uF 5% 50V
C147	1-163-038-91	s	CERAMIC, CHIP 0.1uF 25V
C148	1-126-394-11	s	ELECT, CHIP 10uF 20% 16V
C149	1-163-038-91	s	CERAMIC, CHIP 0.1uF 25V
C150	1-109-994-11	■	CERAMIC, CHIP 2.2uF 10% 10V
C151	1-164-489-11	s	CERAMIC, CHIP 0.22uF 10% 16V
C152	1-163-251-11	s	CERAMIC, CHIP 100PF 5% 50V
C153	1-163-033-91	s	CERAMIC, CHIP 0.022uF 50V
C154	1-163-038-91	s	CERAMIC, CHIP 0.1uF 25V
C158	1-163-033-91	s	CERAMIC, CHIP 0.022uF 50V
C210	1-163-038-91	■	CERAMIC, CHIP 0.1uF 25V

(RP-89/89A BOARD(ESBK-7041) board suffix number -12)

Ref. No. or Q'ty	Part No.	SP	Description
C211	1-163-038-91	s	CERAMIC, CHIP 0.1uF 25V
C217	1-126-396-11	s	ELECT, CHIP 47uF 20% 16V
C218-221	1-163-038-91	■	CERAMIC, CHIP 0.1uF 25V
C222	1-126-396-11	s	ELECT, CHIP 47uF 20% 16V
C223	1-163-038-91	s	CERAMIC, CHIP 0.1uF 25V
C224	1-163-251-11	s	CERAMIC, CHIP 100PF 5% 50V
C225	1-163-038-91	s	CERAMIC, CHIP 0.1uF 25V
C226	1-126-396-11	s	ELECT, CHIP 47uF 20% 16V
C227	1-163-251-11	s	CERAMIC, CHIP 100PF 5% 50V
C230	1-163-038-91	s	CERAMIC, CHIP 0.1uF 25V
C232	1-163-038-91	■	CERAMIC, CHIP 0.1uF 25V
C234	1-163-038-91	■	CERAMIC, CHIP 0.1uF 25V
C235	1-163-038-91	s	CERAMIC, CHIP 0.1uF 25V
C239	1-163-038-91	s	CERAMIC, CHIP 0.1uF 25V
C242	1-126-396-11	■	ELECT, CHIP 47uF 20% 16V
C244	1-163-275-11	s	CERAMIC, CHIP 0.001uF 5% 50V
C245	1-163-275-11	s	CERAMIC, CHIP 0.001uF ■ 50V
C247	1-163-038-91	s	CERAMIC, CHIP 0.1uF 25V
C248	1-126-394-11	■	ELECT, CHIP 10uF 20% 16V
C249	1-163-038-91	s	CERAMIC, CHIP 0.1uF 25V
C250	1-109-994-11	s	CERAMIC, CHIP 2.2uF 10% 10V
C251	1-164-489-11	s	CERAMIC, CHIP 0.22uF 10% 16V
C252	1-163-251-11	■	CERAMIC, CHIP 100PF 5% 50V
C253	1-163-033-91	s	CERAMIC, CHIP 0.022uF 50V
C254	1-163-038-91	■	CERAMIC, CHIP 0.1uF 25V
C258	1-163-033-91	s	CERAMIC, CHIP 0.022uF 50V
C301-312	1-163-038-91	s	CERAMIC, CHIP 0.1uF 25V
C313	1-126-393-11	■	ELECT, CHIP 33uF 20% 10V
C314	1-126-393-11	s	ELECT, CHIP 33uF 20% 10V
C315	1-163-038-91	s	CERAMIC, CHIP 0.1uF 25V
C316	1-163-038-91	s	CERAMIC, CHIP 0.1uF 25V
C317	1-126-396-11	■	ELECT, CHIP 47uF 20% 16V
C318-321	1-163-038-91	s	CERAMIC, CHIP 0.1uF 25V
C322	1-126-396-11	s	ELECT, CHIP 47uF 20% 16V
C323	1-163-038-91	s	CERAMIC, CHIP 0.1uF 25V
C324	1-163-251-11	s	CERAMIC, CHIP 100PF 5% 50V
C325	1-163-038-91	s	CERAMIC, CHIP 0.1uF 25V
C326	1-126-396-11	s	ELECT, CHIP 47uF 20% 16V
C327	1-163-251-11	s	CERAMIC, CHIP 100PF 5% 50V
C328	1-163-038-91	s	CERAMIC, CHIP 0.1uF 25V
C330	1-163-038-91	s	CERAMIC, CHIP 0.1uF 25V
C332	1-163-038-91	s	CERAMIC, CHIP 0.1uF 25V
C334	1-163-038-91	s	CERAMIC, CHIP 0.1uF 25V
C335	1-163-038-91	s	CERAMIC, CHIP 0.1uF 25V
C339	1-163-038-91	s	CERAMIC, CHIP 0.1uF 25V
C342	1-126-396-11	s	ELECT, CHIP 47uF 20% 16V
C344	1-163-275-11	s	CERAMIC, CHIP 0.001uF 5% 50V
C345	1-163-275-11	■	CERAMIC, CHIP 0.001uF ■ 50V
C347	1-163-038-91	s	CERAMIC, CHIP 0.1uF 25V
C348	1-126-394-11	s	ELECT, CHIP 10uF 20% 16V
C349	1-163-038-91	s	CERAMIC, CHIP 0.1uF 25V
C350	1-109-994-11	s	CERAMIC, CHIP 2.2uF 10% 10V
C351	1-164-489-11	s	CERAMIC, CHIP 0.22uF 10% 16V
C352	1-163-251-11	s	CERAMIC, CHIP 100PF 5% 50V
C353	1-163-033-91	s	CERAMIC, CHIP 0.022uF 50V
C354	1-163-038-91	s	CERAMIC, CHIP 0.1uF 25V
C358	1-163-033-91	s	CERAMIC, CHIP 0.022uF 50V
C410	1-163-038-91	s	CERAMIC, CHIP 0.1uF 25V
C411	1-163-038-91	s	CERAMIC, CHIP 0.1uF 25V

(RP-89/89A BOARD(ESBK-7041) board suffix number -12)

Ref. No. or Q'ty	Part No.	SP	Description
C417	1-126-396-11	■	ELECT, CHIP 47uF 20% 16V
C418-421	1-163-038-91	■	CERAMIC, CHIP 0.1uF 25V
C422	1-126-396-11	s	ELECT, CHIP 47uF 20% 16V
C423	1-163-038-91	s	CERAMIC, CHIP 0.1uF 25V
C424	1-163-251-11	s	CERAMIC, CHIP 100PF 5% 50V
C425	1-163-038-91	■	CERAMIC, CHIP 0.1uF 25V
C426	1-126-396-11	s	ELECT, CHIP 47uF 20% 16V
C427	1-163-251-11	s	CERAMIC, CHIP 100PF 5% 50V
C430	1-163-038-91	■	CERAMIC, CHIP 0.1uF 25V
C432	1-163-038-91	s	CERAMIC, CHIP 0.1uF 25V
C434	1-163-038-91	s	CERAMIC, CHIP 0.1uF 25V
C435	1-163-038-91	s	CERAMIC, CHIP 0.1uF 25V
C439	1-163-038-91	■	CERAMIC, CHIP 0.1uF 25V
C442	1-126-396-11	■	ELECT, CHIP 47uF 20% 16V
C444	1-163-275-11	■	CERAMIC, CHIP 0.001uF 5% 50V
C445	1-163-275-11	s	CERAMIC, CHIP 0.001uF 5% 50V
C447	1-163-038-91	■	CERAMIC, CHIP 0.1uF 25V
C448	1-126-394-11	■	ELECT, CHIP 10uF 20% 16V
C449	1-163-038-91	s	CERAMIC, CHIP 0.1uF 25V
C450	1-109-994-11	s	CERAMIC, CHIP 2.2uF 10% 10V
C451	1-164-489-11	s	CERAMIC, CHIP 0.22uF 10% 16V
C452	1-163-251-11	s	CERAMIC, CHIP 100PF 5% 50V
C453	1-163-033-91	■	CERAMIC, CHIP 0.022uF 50V
C454	1-163-038-91	s	CERAMIC, CHIP 0.1uF 25V
C458	1-163-033-91	s	CERAMIC, CHIP 0.022uF 50V
C501-512	1-163-038-91	■	CERAMIC, CHIP 0.1uF 25V
C513	1-126-393-11	■	ELECT, CHIP 33uF 20% 10V
C514	1-126-393-11	■	ELECT, CHIP 33uF 20% 10V
C515	1-163-038-91	■	CERAMIC, CHIP 0.1uF 25V
C516	1-163-038-91	■	CERAMIC, CHIP 0.1uF 25V
C517	1-126-396-11	s	ELECT, CHIP 47uF 20% 16V
C518-521	1-163-038-91	s	CERAMIC, CHIP 0.1uF 25V
C522	1-126-396-11	■	ELECT, CHIP 47uF 20% 16V
C523-526	1-163-038-91	s	CERAMIC, CHIP 0.1uF 25V
C527	1-163-251-11	s	CERAMIC, CHIP 100PF 5% 50V
C528	1-163-251-11	s	CERAMIC, CHIP 100PF 5% 50V
C529-531	1-163-038-91	s	CERAMIC, CHIP 0.1uF 25V
C532	1-126-396-11	s	ELECT, CHIP 47uF 20% 16V
C533	1-163-038-91	s	CERAMIC, CHIP 0.1uF 25V
C534	1-163-038-91	s	CERAMIC, CHIP 0.1uF 25V
C535	1-126-396-11	■	ELECT, CHIP 47uF 20% 16V
C536	1-163-038-91	s	CERAMIC, CHIP 0.1uF 25V
C538	1-163-038-91	s	CERAMIC, CHIP 0.1uF 25V
C542	1-126-396-11	■	ELECT, CHIP 47uF 20% 16V
C543	1-163-275-11	s	CERAMIC, CHIP 0.001uF 5% 50V
C544	1-163-275-11	s	CERAMIC, CHIP 0.001uF 5% 50V
C546	1-163-038-91	s	CERAMIC, CHIP 0.1uF 25V
C547	1-126-394-11	■	ELECT, CHIP 10uF 20% 16V
C548	1-163-038-91	■	CERAMIC, CHIP 0.1uF 25V
C549	1-109-994-11	■	CERAMIC, CHIP 2.2uF 10% 10V
C550	1-163-038-91	s	CERAMIC, CHIP 0.1uF 25V
C551	1-163-251-11	s	CERAMIC, CHIP 100PF ■ 50V
C552-554	1-163-033-91	■	CERAMIC, CHIP 0.022uF 50V
C555	1-126-396-11	s	ELECT, CHIP 47uF 20% 16V
C556	1-163-038-91	s	CERAMIC, CHIP 0.1uF 25V
C560	1-163-033-91	s	CERAMIC, CHIP 0.022uF 50V
C612	1-126-396-11	s	ELECT, CHIP 47uF 20% 16V
C617	1-126-396-11	s	ELECT, CHIP 47uF 20% 16V
C618-621	1-163-038-91	s	CERAMIC, CHIP 0.1uF 25V

(RP-89/89A BOARD(ESBK-7041) board suffix number -12)

Ref. No. or Q'ty	Part No.	SP	Description	
C622	1-126-396-11	s	ELECT, CHIP 47uF 20% 16V	
C623	1-163-038-91	s	CERAMIC, CHIP 0.1uF 25V	
C652	1-163-033-91	s	CERAMIC, CHIP 0.022uF 50V	
C654	1-163-033-91	s	CERAMIC, CHIP 0.022uF 50V	
C701-712	1-163-038-91	s	CERAMIC, CHIP 0.1uF 25V	
C713	1-126-393-11	s	ELECT, CHIP 33uF 20% 10V	
C714	1-126-393-11	s	ELECT, CHIP 33uF 20% 10V	
C715-722	1-163-038-91	s	CERAMIC, CHIP 0.1uF 25V	
C723	1-126-393-11	s	ELECT, CHIP 33uF 20% 10V	
C724-727	1-163-038-91	s	CERAMIC, CHIP 0.1uF 25V	
C728	1-126-393-11	s	ELECT, CHIP 33uF 20% 10V	
C729-732	1-163-038-91	s	CERAMIC, CHIP 0.1uF 25V	
C733	1-126-393-11	s	ELECT, CHIP 33uF 20% 10V	
C734-760	1-163-038-91	s	CERAMIC, CHIP 0.1uF 25V	
C761	1-126-393-11	■	ELECT, CHIP 33uF 20% 10V	[for PAL]
C753-760	1-163-038-91	s	CERAMIC, CHIP 0.1uF 25V	
C762	1-163-038-91	s	CERAMIC, CHIP 0.1uF 25V	
C763-770	1-163-038-91	s	CERAMIC, CHIP 0.1uF 25V	[for PAL]
C771-774	1-163-038-91	s	CERAMIC, CHIP 0.1uF 25V	
C775	1-163-038-91	s	CERAMIC, CHIP 0.1uF 25V	[for PAL]
C776-784	1-163-038-91	■	CERAMIC, CHIP 0.1uF 25V	[for NTSC]
C785	1-126-393-11	■	ELECT, CHIP 33uF 20% 10V	[for NTSC]
C786	1-163-038-91	s	CERAMIC, CHIP 0.1uF 25V	[for NTSC]
C787	1-163-038-91	s	CERAMIC, CHIP 0.1uF 25V	[for NTSC]
C788-796	1-163-038-91	s	CERAMIC, CHIP 0.1uF 25V	[for PAL]
C797	1-126-393-11	s	ELECT, CHIP 33uF 20% 10V	[for PAL]
C798-812	1-163-038-91	s	CERAMIC, CHIP 0.1uF 25V	
C813	1-126-393-11	s	ELECT, CHIP 33uF 20% 10V	
C814	1-126-393-11	s	ELECT, CHIP 33uF 20% 10V	
C815-822	1-163-038-91	s	CERAMIC, CHIP 0.1uF 25V	
C823	1-126-393-11	■	ELECT, CHIP 33uF 20% 10V	
C831	1-163-038-91	s	CERAMIC, CHIP 0.1uF 25V	
C832	1-126-393-11	s	ELECT, CHIP 33uF 20% 10V	
C833-857	1-163-038-91	s	CERAMIC, CHIP 0.1uF 25V	
C858	1-163-038-91	s	CERAMIC, CHIP 0.1uF 25V	[for NTSC]
C859	1-163-038-91	s	CERAMIC, CHIP 0.1uF 25V	[for NTSC]
C877	1-126-393-11	s	ELECT, CHIP 33uF 20% 10V	[for NTSC]
C878	1-163-038-91	■	CERAMIC, CHIP 0.1uF 25V	[for NTSC]
C879	1-163-038-91	■	CERAMIC, CHIP 0.1uF 25V	[for PAL]
C885	1-126-393-11	■	ELECT, CHIP 33uF 20% 10V	[for PAL]
C889	1-163-038-91	s	CERAMIC, CHIP 0.1uF 25V	[for NTSC]
C890	1-163-038-91	s	CERAMIC, CHIP 0.1uF 25V	[for NTSC]
C894	1-126-393-11	s	ELECT, CHIP 33uF 20% 10V	
C895	1-163-038-91	s	CERAMIC, CHIP 0.1uF 25V	[for NTSC]
C898	1-163-038-91	s	CERAMIC, CHIP 0.1uF 25V	[for NTSC]
C899	1-163-038-91	s	CERAMIC, CHIP 0.1uF 25V	[for NTSC]
C913	1-126-393-11	s	ELECT, CHIP 33uF 20% 10V	
C914	1-126-393-11	s	ELECT, CHIP 33uF 20% 10V	
C915	1-163-038-91	s	CERAMIC, CHIP 0.1uF 25V	[for NTSC]
C923	1-126-393-11	s	ELECT, CHIP 33uF 20% 10V	
C931	1-163-038-91	s	CERAMIC, CHIP 0.1uF 25V	
C932	1-126-393-11	s	ELECT, CHIP 33uF 20% 10V	
C933	1-163-038-91	s	CERAMIC, CHIP 0.1uF 25V	[for NTSC]
C977	1-126-393-11	s	ELECT, CHIP 33uF 20% 10V	[for NTSC]
C978	1-163-038-91	s	CERAMIC, CHIP 0.1uF 25V	[for NTSC]
C987	1-126-393-11	s	ELECT, CHIP 33uF 20% 10V	[for PAL]

(RP-89/89A BOARD(ESBK-7041) board suffix number -12)

Ref. No. or Q'ty	Part No.	SP	Description
C994	1-126-393-11	s	ELECT, CHIP 33uF 20% 10V
C995	1-163-038-91	■	CERAMIC, CHIP 0.1uF 25V [for NTSC]
C1001	1-164-232-11	s	CERAMIC, CHIP 0.01uF 10% 100V
C1012-1014	1-163-038-91	s	CERAMIC, CHIP 0.1uF 25V [for NTSC]
C1015	1-126-393-11	■	ELECT, CHIP 33uF 20% 10V
C1016	1-163-038-91	s	CERAMIC, CHIP 0.1uF 25V
C1019	1-163-009-11	s	CERAMIC, CHIP 0.001uF 10% 50V
C1020	1-104-760-11	s	CERAMIC, CHIP 0.047uF 10% 50V
C1021	1-163-009-11	s	CERAMIC, CHIP 0.001uF 10% 50V
C1022	1-163-009-11	■	CERAMIC, CHIP 0.001uF 10% 50V
C1023	1-135-149-21	■	TANTALUM, CHIP 2.2uF 10% 10V
C1024	1-164-232-11	s	CERAMIC, CHIP 0.01uF 10% 100V
C1035-1037	1-163-038-91	s	CERAMIC, CHIP 0.1uF 25V [for NTSC]
C1038	1-126-393-11	s	ELECT, CHIP 33uF 20% 10V
C1039	1-163-038-91	s	CERAMIC, CHIP 0.1uF 25V
C1040	1-126-393-11	s	ELECT, CHIP 33uF 20% 10V
C1041	1-163-038-91	■	CERAMIC, CHIP 0.1uF 25V
C1042	1-163-009-11	s	CERAMIC, CHIP 0.001uF 10% 50V
C1043	1-104-760-11	s	CERAMIC, CHIP 0.047uF 10% 50V
C1044	1-163-009-11	s	CERAMIC, CHIP 0.001uF 10% 50V
C1045	1-163-009-11	s	CERAMIC, CHIP 0.001uF 10% 50V
C1046	1-135-149-21	s	TANTALUM, CHIP 2.2uF 10% 10V
C1050	1-163-227-11	s	CERAMIC, CHIP 10PF 5% 50V
C1051	1-163-227-11	■	CERAMIC, CHIP 10PF 5% 50V
C1052-1055	1-163-038-91	s	CERAMIC, CHIP 0.1uF 25V [for NTSC]
CN301-303	1-778-261-11	■	CONNECTOR, BB 124P, MALE
CN1763	1-251-351-11	o	SOCKET, IC 44P [for PAL]
CT701	1-141-322-11	s	CAP, TRIMMER, CHIP 20pF
CT702	1-141-322-11	s	CAP, TRIMMER, CHIP 20pF
D1-10	8-719-938-72	s	DIODE SB01-05CP
D101	8-719-041-39	■	DIODE KV1470
D201	8-719-041-39	■	DIODE KV1470
D301	8-719-041-39	■	DIODE KV1470
D401	8-719-041-39	■	DIODE KV1470
D501	8-719-041-39	s	DIODE KV1470
D1001	8-719-027-95	s	DIODE HSM88WK
D1002	8-719-041-39	s	DIODE KV1470
D1003	8-719-027-95	s	DIODE HSM88WK
D1004	8-719-041-39	s	DIODE KV1470
F1	⚠ 1-533-477-11	s	FUSE, CHIP 8A 125V
FL1-4	1-239-719-11	■	FILTER, NOISE, CHIP
FL6	1-239-719-11	s	FILTER, NOISE, CHIP
FL7-12	1-239-642-21	s	EMIFIL ARRAY, CHIP
FL13-18	1-239-719-11	s	FILTER, NOISE, CHIP
IC1	8-759-259-77	s	IC PQ20VZ5U
IC4	8-759-186-47	s	IC TC74VHC138F
IC5	8-759-186-47	s	IC TC74VHC138F
IC6	8-759-259-77	s	IC PQ20VZ5U
IC7	8-759-186-47	s	IC TC74VHC138F
IC8	8-759-175-29	s	IC TC74VHC374F
IC9	8-759-186-77	s	IC TC74VHC541F
IC10	8-759-186-77	s	IC TC74VHC541F

(RP-89/89A BOARD(ESBK-7041) board suffix number -12)

Ref. No. or Q'ty	Part No.	SP	Description
IC11	8-759-259-77	s	IC PQ20VZ5U
IC12	8-759-925-76	s	IC SN74HC08ANS
IC13	8-759-359-54	s	IC SN74ALS244CNS-E20
IC14	8-759-934-41	s	IC SN74ALS240ANS
IC15	8-759-186-60	s	IC TC74VHC240F
IC16	8-759-259-77	s	IC PQ20VZ5U
IC17	8-759-939-92	s	IC SN74ALS541NS
IC18	8-759-186-57	s	IC TC74VHC175F
IC19	8-759-168-19	s	IC TA78L09F-TE12L
IC20	8-759-186-77	s	IC TC74VHC541F
IC21	8-759-259-77	s	IC PQ20VZ5U
IC102	8-759-371-04	s	IC HM514260CJ7-Z
IC103	8-759-371-04	s	IC HM514260CJ7-Z
IC104	8-759-337-74	s	IC HM62V256LT8Z
IC105	8-752-374-96	s	IC CXD2190R
IC106	8-759-058-58	s	IC TC7S04FU(TE85R)
IC108	8-759-906-53	s	IC TL062CPS
IC110	8-759-095-67	s	IC TC74ACT541FS
IC111	8-759-326-71	s	IC CXD8517Q
IC112	8-759-095-67	s	IC TC74ACT541FS
IC113	8-759-327-04	s	IC CXD2913Q
IC114	8-759-196-97	s	IC TC7SH32FU-TE85R
IC204	8-759-337-74	s	IC HM62V256LT8Z
IC205	8-752-374-96	s	IC CXD2190R
IC206	8-759-058-58	s	IC TC7S04FU(TE85R)
IC208	8-759-906-53	s	IC TL062CPS
IC210	8-759-095-67	s	IC TC74ACT541FS
IC211	8-759-326-71	s	IC CXD8517Q
IC213	8-759-327-04	s	IC CXD2913Q
IC214	8-759-196-97	s	IC TC7SH32FU-TE85R
IC302	8-759-371-04	s	IC HM514260CJ7-Z
IC303	8-759-371-04	s	IC HM514260CJ7-Z
IC304	8-759-337-74	s	IC HM62V256LT8Z
IC305	8-752-374-96	s	IC CXD2190R
IC306	8-759-058-58	s	IC TC7S04FU(TE85R)
IC308	8-759-906-53	s	IC TL062CPS
IC310	8-759-095-67	s	IC TC74ACT541FS
IC311	8-759-326-71	s	IC CXD8517Q
IC312	8-759-095-67	s	IC TC74ACT541FS
IC313	8-759-327-04	s	IC CXD2913Q
IC314	8-759-196-97	s	IC TC7SH32FU-TE85R
IC404	8-759-337-74	s	IC HM62V256LT8Z
IC405	8-752-374-96	s	IC CXD2190R
IC406	8-759-058-58	s	IC TC7S04FU(TE85R)
IC408	8-759-906-53	s	IC TL062CPS
IC410	8-759-095-67	s	IC TC74ACT541FS
IC411	8-759-326-71	s	IC CXD8517Q
IC413	8-759-327-04	s	IC CXD2913Q
IC414	8-759-196-97	s	IC TC7SH32FU-TE85R
IC502	8-759-371-04	s	IC HM514260CJ7-Z
IC503	8-759-371-04	s	IC HM514260CJ7-Z
IC504	8-759-337-74	s	IC HM62V256LT8Z
IC505	8-752-374-96	s	IC CXD2190R
IC508	8-759-906-53	s	IC TL062CPS
IC509	8-759-174-16	s	IC TC74VHC244F
IC510	8-759-095-67	s	IC TC74ACT541FS
IC511	8-759-326-71	s	IC CXD8517Q
IC512	8-759-271-86	s	IC TC7SH04FU
IC513	8-759-926-17	s	IC SN74HC153ANS

(RP-89/89A BOARD(ESBK-7041) board suffix number -12)

Ref. No. or Q'ty	Part No.	SP	Description	
IC515	8-759-186-38	s	IC TC74VHC32F	
IC518	8-759-327-04	s	IC CXD2913Q	
IC604	8-759-337-74	s	IC HM62V256LT8Z	
IC605	8-752-374-96	s	IC CXD2190R	
IC611	8-759-326-71	s	IC CXD8517Q	
IC702	8-759-371-04	s	IC HM514260CJ7-Z	
IC703	8-759-371-04	s	IC HM514260CJ7-Z	
IC704	8-759-327-06	s	IC CXD2186R	
IC730	8-759-327-05	s	IC CXD2184R	
IC731-733	8-759-328-28	s	IC ZA4024	
IC760-763	8-759-175-27	s	IC TC74VHC574F	[for PAL]
IC764	8-759-186-39	s	IC TC74VHC74F	[for PAL]
IC765-567	8-759-175-27	s	IC TC74VHC574F	
IC768	8-759-430-86	s	IC CXD8628R	[for NTSC]
IC769	8-759-327-31	s	IC CXD2183R	[for PAL]
IC770	8-752-373-89	s	IC CXD2185R	
IC771	8-759-186-60	s	IC TC74VHC240F	[for PAL]
IC772	8-759-174-16	s	IC TC74VHC244F	[for PAL]
IC773	8-759-081-42	s	IC TC74VHC00F	
IC774	8-759-186-38	s	IC TC74VHC32F	
IC776	8-759-186-44	s	IC TC74VHC125F	
IC802	8-759-371-04	s	IC HM514260CJ7-Z	
IC803	8-759-371-04	s	IC HM514260CJ7-Z	
IC804	8-759-327-06	s	IC CXD2186R	
IC830	8-759-327-05	s	IC CXD2184R	
IC831-833	8-759-328-28	s	IC ZA4024	
IC860-862	8-759-175-27	s	IC TC74VHC574F	[for PAL]
IC863	8-759-515-12	s	IC SN74ALS574BNS	
IC864	8-759-515-12	s	IC SN74ALS574BNS	
IC865	8-759-430-86	s	IC CXD8628R	[for NTSC]
IC866	8-759-327-31	s	IC CXD2183R	[for PAL]
IC867	8-752-373-89	s	IC CXD2185R	
IC902	8-759-371-04	s	IC HM514260CJ7-Z	
IC903	8-759-371-04	s	IC HM514260CJ7-Z	
IC904	8-759-327-06	s	IC CXD2186R	
IC930	8-759-327-05	s	IC CXD2184R	
IC931-933	8-759-328-28	s	IC ZA4024	
IC960-962	8-759-175-27	s	IC TC74VHC574F	[for PAL]
IC963	8-759-515-12	s	IC SN74ALS574BNS	
IC964	8-759-515-12	s	IC SN74ALS574BNS	
IC965	8-759-430-86	s	IC CXD8628R	[for NTSC]
IC966	8-759-327-31	s	IC CXD2183R	[for PAL]
IC967	8-752-373-89	s	IC CXD2185R	
IC1001	8-752-375-05	s	IC CXD2191R	
IC1002	8-752-375-05	s	IC CXD2191R	
IC1003-1005	8-759-174-16	s	IC TC74VHC244F	
IC1006	8-759-426-15	s	IC CXD8617R	

(RP-89/89A BOARD(ESBK-7041) board suffix number -12)

Ref. No. or Q'ty	Part No.	SP	Description	
IC1007	8-759-175-29	s	IC TC74VHC374F	
IC1008	8-759-081-42	s	IC TC74VHC00F	
IC1009	8-759-196-97	s	IC TC7SH32FU-TE85R	
IC1010	8-759-175-27	s	IC TC74VHC574F	
L1-3	1-412-520-11	s	INDUCTOR 3.9uH	
L4	1-412-519-11	s	INDUCTOR 3.3uH	
L6	1-410-381-11	■	INDUCTOR, CHIP 10uH	
L101-103	1-410-381-11	s	INDUCTOR, CHIP 10uH	
L106	1-410-381-11	s	INDUCTOR, CHIP 10uH	
L108	1-410-381-11	s	INDUCTOR, CHIP 10uH	
L111	1-410-381-11	s	INDUCTOR, CHIP 10uH	
L203	1-410-381-11	s	INDUCTOR, CHIP 10uH	
L206	1-410-381-11	■	INDUCTOR, CHIP 10uH	
L208	1-410-381-11	■	INDUCTOR, CHIP 10uH	
L211	1-410-381-11	s	INDUCTOR, CHIP 10uH	
L301-303	1-410-381-11	s	INDUCTOR, CHIP 10uH	
L306	1-410-381-11	s	INDUCTOR, CHIP 10uH	
L308	1-410-381-11	s	INDUCTOR, CHIP 10uH	
L311	1-410-381-11	s	INDUCTOR, CHIP 10uH	
L403	1-410-381-11	s	INDUCTOR, CHIP 10uH	
L406	1-410-381-11	s	INDUCTOR, CHIP 10uH	
L408	1-410-381-11	s	INDUCTOR, CHIP 10uH	
L411	1-410-381-11	s	INDUCTOR, CHIP 10uH	
L501-506	1-410-381-11	s	INDUCTOR, CHIP 10uH	
L508	1-410-381-11	s	INDUCTOR, CHIP 10uH	
L510	1-410-381-11	s	INDUCTOR, CHIP 10uH	
L603	1-410-381-11	s	INDUCTOR, CHIP 10uH	
L610	1-410-381-11	s	INDUCTOR, CHIP 10uH	
L701-703	1-410-381-11	s	INDUCTOR, CHIP 10uH	
L731	1-410-381-11	s	INDUCTOR, CHIP 10uH	
L761	1-410-381-11	s	INDUCTOR, CHIP 10uH	[for PAL]
L762	1-410-381-11	■	INDUCTOR, CHIP 10uH	[for NTSC]
L763	1-410-381-11	s	INDUCTOR, CHIP 10uH	[for PAL]
L764	1-410-381-11	s	INDUCTOR, CHIP 10uH	
L801-803	1-410-381-11	s	INDUCTOR, CHIP 10uH	
L831	1-410-381-11	s	INDUCTOR, CHIP 10uH	
L861	1-410-381-11	s	INDUCTOR, CHIP 10uH	[for NTSC]
L862	1-410-381-11	s	INDUCTOR, CHIP 10uH	[for PAL]
L863	1-410-381-11	s	INDUCTOR, CHIP 10uH	
L901-903	1-410-381-11	s	INDUCTOR, CHIP 10uH	
L931	1-410-381-11	s	INDUCTOR, CHIP 10uH	
L961	1-410-381-11	s	INDUCTOR, CHIP 10uH	[for NTSC]
L962	1-410-381-11	s	INDUCTOR, CHIP 10uH	[for PAL]
L963	1-410-381-11	■	INDUCTOR, CHIP 10uH	
L1001	1-410-381-11	s	INDUCTOR, CHIP 10uH	
L1002	1-410-740-31	s	INDUCTOR CHIP 0.82uH	
L1003	1-410-381-11	s	INDUCTOR, CHIP 10uH	
L1004	1-410-740-31	s	INDUCTOR CHIP 0.82uH	
L1005	1-410-381-11	s	INDUCTOR, CHIP 10uH	
LV107	1-411-984-11	s	COIL, VARIABLE	
LV207	1-411-984-11	s	COIL, VARIABLE	
LV307	1-411-984-11	s	COIL, VARIABLE	
LV407	1-411-984-11	s	COIL, VARIABLE	
LV507	1-411-984-11	s	COIL, VARIABLE	
Q101	8-729-027-59	s	TRANSISTOR DTC144EKA-T146	
Q201	8-729-027-59	s	TRANSISTOR DTC144EKA-T146	
Q301	8-729-027-59	s	TRANSISTOR DTC144EKA-T146	
Q401	8-729-027-59	s	TRANSISTOR DTC144EKA-T146	

(RP-89/89A BOARD(ESBK-7041) board suffix number -12)

Ref. No. or Q'ty	Part No.	SP	Description
R1	1-216-061-00	s	METAL, CHIP 3.3K 5% 1/10W
R2-5	1-216-009-00	s	METAL, CHIP 22 5% 1/10W
R6-9	1-216-061-00	s	METAL, CHIP 3.3K 5% 1/10W
R16-20	1-216-295-91	s	RES, CHIP 0
R21	1-216-631-11	s	METAL, CHIP 150 0.5% 1/10W
R22	1-216-636-11	s	METAL, CHIP 240 0.5% 1/10W
R23	1-216-652-11	s	METAL, CHIP 1.1K 0.5% 1/10W
R24	1-216-651-11	■	METAL, CHIP 1K 0.5% 1/10W
R25	1-216-631-11	■	METAL, CHIP 150 0.5% 1/10W
R26	1-216-636-11	s	METAL, CHIP 240 0.5% 1/10W
R27	1-216-652-11	■	METAL, CHIP 1.1K 0.5% 1/10W
R28	1-216-651-11	■	METAL, CHIP 1K 0.5% 1/10W
R29	1-216-631-11	s	METAL, CHIP 150 0.5% 1/10W
R30	1-216-636-11	s	METAL, CHIP 240 0.5% 1/10W
R31	1-216-652-11	s	METAL, CHIP 1.1K 0.5% 1/10W
R32	1-216-651-11	■	METAL, CHIP 1K 0.5% 1/10W
R33	1-216-631-11	s	METAL, CHIP 150 0.5% 1/10W
R34	1-216-636-11	s	METAL, CHIP 240 0.5% 1/10W
R35	1-216-652-11	s	METAL, CHIP 1.1K 0.5% 1/10W
R36	1-216-651-11	s	METAL, CHIP 1K 0.5% 1/10W
R37	1-216-631-11	s	METAL, CHIP 150 0.5% 1/10W
R38	1-216-636-11	■	METAL, CHIP 240 0.5% 1/10W
R39	1-216-652-11	s	METAL, CHIP 1.1K 0.5% 1/10W
R40	1-216-651-11	■	METAL, CHIP 1K 0.5% 1/10W
R41	1-216-009-00	s	METAL, CHIP 22 5% 1/10W
R45-48	1-216-009-00	■	METAL, CHIP 22 5% 1/10W
R49-53	1-216-025-91	s	METAL, CHIP 100 5% 1/10W
R54	1-216-295-91	s	RES, CHIP 0
R55	1-216-061-00	■	METAL, CHIP 3.3K 5% 1/10W
R57	1-216-295-91	s	RES, CHIP 0
R58	1-216-009-00	s	METAL, CHIP 22 5% 1/10W
R101-103	1-216-049-91	s	METAL, CHIP 1k 5% 1/10W
R104-109	1-216-295-91	■	RES, CHIP 0
R114	1-216-073-00	s	METAL, CHIP 10K 5% 1/10W
R118	1-216-295-91	s	RES, CHIP 0
R121	1-216-083-00	s	METAL, CHIP 27K 5% 1/10W
R122-124	1-216-295-91	■	RES, CHIP 0
R125	1-216-083-00	■	METAL, CHIP 27K 5% 1/10W
R135	1-216-049-91	■	METAL, CHIP 1k 5% 1/10W
R136-138	1-216-089-91	s	METAL, CHIP 47k 5% 1/10W
R140-143	1-216-295-91	s	RES, CHIP 0
R144	1-216-097-91	s	METAL, CHIP 100k 5% 1/10W
R145	1-216-091-00	s	METAL, CHIP 56K 5% 1/10W
R146	1-216-691-11	s	METAL, CHIP 47K 0.5% 1/10W
R147	1-216-089-91	■	METAL, CHIP 47k 5% 1/10W
R148	1-216-089-91	■	METAL, CHIP 47k 5% 1/10W
R149	1-216-295-91	s	RES, CHIP 0
R153-155	1-216-295-91	s	RES, CHIP 0
R169	1-216-009-00	s	METAL, CHIP 22 5% 1/10W
R171	1-216-295-91	s	RES, CHIP 0
R172	1-216-295-91	s	RES, CHIP 0
R173	1-216-009-00	s	METAL, CHIP 22 5% 1/10W
R201	1-216-295-91	s	RES, CHIP 0
R202	1-216-295-91	s	RES, CHIP 0
R214	1-216-073-00	■	METAL, CHIP 10K 5% 1/10W
R218	1-216-009-00	s	METAL, CHIP 22 5% 1/10W
R221	1-216-083-00	s	METAL, CHIP 27K 5% 1/10W
R225	1-216-083-00	s	METAL, CHIP 27K 5% 1/10W
R235	1-216-049-91	s	METAL, CHIP 1k 5% 1/10W

(RP-89/89A BOARD(ESBK-7041) board suffix number -12)

Ref. No. or Q'ty	Part No.	SP	Description
R236-238	1-216-089-91	s	METAL, CHIP 47k 5% 1/10W
R240-243	1-216-295-91	s	RES, CHIP 0
R244	1-216-097-91	s	METAL, CHIP 100k 5% 1/10W
R245	1-216-091-00	■	METAL, CHIP 56K 5% 1/10W
R246	1-216-691-11	s	METAL, CHIP 47K 0.5% 1/10W
R247	1-216-089-91	s	METAL, CHIP 47k 5% 1/10W
R248	1-216-089-91	s	METAL, CHIP 47k 5% 1/10W
R249	1-216-295-91	■	RES, CHIP 0
R253-255	1-216-295-91	s	RES, CHIP 0
R272	1-216-295-91	■	RES, CHIP 0
R301	1-216-049-91	s	METAL, CHIP 1k 5% 1/10W
R301	1-216-295-91	s	RES, CHIP 0 [for PAL]
R302	1-216-049-91	s	METAL, CHIP 1k 5% 1/10W
R303	1-216-049-91	s	METAL, CHIP 1k 5% 1/10W
R304	1-216-295-91	s	RES, CHIP 0 [for NTSC]
R305-309	1-216-295-91	■	RES, CHIP 0
R314	1-216-073-00	s	METAL, CHIP 10K 5% 1/10W
R318	1-216-295-91	■	RES, CHIP 0
R321	1-216-083-00	s	METAL, CHIP 27K 5% 1/10W
R322-324	1-216-295-91	s	RES, CHIP 0
R325	1-216-083-00	s	METAL, CHIP 27K 5% 1/10W
R335	1-216-049-91	■	METAL, CHIP 1k 5% 1/10W
R336-338	1-216-089-91	s	METAL, CHIP 47k 5% 1/10W
R340-343	1-216-295-91	■	RES, CHIP 0
R344	1-216-097-91	s	METAL, CHIP 100k 5% 1/10W
R345	1-216-091-00	■	METAL, CHIP 56K 5% 1/10W
R346	1-216-691-11	s	METAL, CHIP 47K 0.5% 1/10W
R347	1-216-089-91	■	METAL, CHIP 47k 5% 1/10W
R348	1-216-089-91	s	METAL, CHIP 47k 5% 1/10W
R349	1-216-295-91	s	RES, CHIP 0
R353-355	1-216-295-91	s	RES, CHIP 0
R369	1-216-009-00	s	METAL, CHIP 22 5% 1/10W
R372	1-216-295-91	■	RES, CHIP 0
R401	1-216-295-91	■	RES, CHIP 0
R402	1-216-295-91	■	RES, CHIP 0
R414	1-216-073-00	s	METAL, CHIP 10K 5% 1/10W
R418	1-216-009-00	■	METAL, CHIP 22 5% 1/10W
R421	1-216-083-00	s	METAL, CHIP 27K 5% 1/10W
R425	1-216-083-00	s	METAL, CHIP 27K 5% 1/10W
R435	1-216-049-91	s	METAL, CHIP 1k 5% 1/10W
R436-438	1-216-089-91	s	METAL, CHIP 47k 5% 1/10W
R440-443	1-216-295-91	s	RES, CHIP 0
R444	1-216-097-91	s	METAL, CHIP 100k 5% 1/10W
R445	1-216-091-00	s	METAL, CHIP 56K 5% 1/10W
R446	1-216-691-11	s	METAL, CHIP 47K 0.5% 1/10W
R447	1-216-089-91	s	METAL, CHIP 47k 5% 1/10W
R448	1-216-089-91	s	METAL, CHIP 47k 5% 1/10W
R449	1-216-295-91	s	RES, CHIP 0
R453-455	1-216-295-91	■	RES, CHIP 0
R472	1-216-295-91	s	RES, CHIP 0
R501-503	1-216-049-91	s	METAL, CHIP 1k 5% 1/10W
R504-507	1-216-295-91	s	RES, CHIP 0
R508	1-216-073-00	s	METAL, CHIP 10K 5% 1/10W
R509	1-216-073-00	s	METAL, CHIP 10K 5% 1/10W
R510	1-216-295-91	s	RES, CHIP 0
R511	1-216-295-91	s	RES, CHIP 0
R525	1-216-009-00	■	METAL, CHIP 22 5% 1/10W
R528	1-216-295-91	s	RES, CHIP 0
R532-536	1-216-073-00	s	METAL, CHIP 10K 5% 1/10W

(RP-89/89A BOARD(ESBK-7041) board suffix number -12)

Ref. No. or Q'ty	Part No.	SP	Description	
R537	1-216-295-91	s	RES, CHIP 0	
R538	1-216-049-91	■	METAL, CHIP 1k 5% 1/10W	
R539-541	1-216-089-91	■	METAL, CHIP 47k 5% 1/10W	
R543	1-216-295-91	s	RES, CHIP 0	
R544	1-216-295-91	s	RES, CHIP 0	
R545	1-216-009-00	s	METAL, CHIP 22 5% 1/10W	
R546	1-216-097-91	■	METAL, CHIP 100k 5% 1/10W	
R547	1-216-091-00	s	METAL, CHIP 56K 5% 1/10W	
R548	1-216-691-11	■	METAL, CHIP 47K 0.5% 1/10W	
R549	1-216-089-91	s	METAL, CHIP 47k 5% 1/10W	
R550	1-216-089-91	■	METAL, CHIP 47k 5% 1/10W	
R551	1-216-295-91	■	RES, CHIP 0	
R563	1-216-009-00	s	METAL, CHIP 22 5% 1/10W	
R565-568	1-216-295-91	s	RES, CHIP 0	
R575	1-216-009-00	s	METAL, CHIP 22 5% 1/10W	
R578-581	1-216-295-91	■	RES, CHIP 0	
R582	1-216-073-00	s	METAL, CHIP 10K 5% 1/10W	
R584-592	1-216-295-91	s	RES, CHIP 0	
R594	1-216-083-00	s	METAL, CHIP 27K 5% 1/10W	
R595	1-216-295-91	s	RES, CHIP 0	
R596	1-216-083-00	s	METAL, CHIP 27K 5% 1/10W	
R601	1-216-295-91	s	RES, CHIP 0	
R602	1-216-295-91	s	RES, CHIP 0	
R604	1-216-683-11	s	METAL, CHIP 22K 0.5% 1/10W	
R605	1-216-295-91	s	RES, CHIP 0	
R608	1-216-073-00	■	METAL, CHIP 10K 5% 1/10W	
R609	1-216-073-00	■	METAL, CHIP 10K 5% 1/10W	
R619	1-216-009-00	s	METAL, CHIP 22 5% 1/10W	
R643	1-216-009-00	s	METAL, CHIP 22 5% 1/10W	
R644	1-216-009-00	s	METAL, CHIP 22 5% 1/10W	
R651	1-216-295-91	■	RES, CHIP 0	
R655-662	1-216-073-00	s	METAL, CHIP 10K 5% 1/10W	
R663	1-216-009-00	■	METAL, CHIP 22 5% 1/10W	
R678	1-216-295-91	s	RES, CHIP 0	
R701-703	1-216-049-91	s	METAL, CHIP 1k 5% 1/10W	
R704-710	1-216-295-91	■	RES, CHIP 0	
R731-734	1-216-049-91	■	METAL, CHIP 1k 5% 1/10W	
R735	1-216-295-91	s	RES, CHIP 0	
R736-744	1-216-001-00	s	METAL, CHIP 10 5% 1/10W	
R762	1-216-295-91	s	RES, CHIP 0 [for NTSC]	
R764	1-216-295-91	s	RES, CHIP 0 [for NTSC]	
R767-778	1-216-295-91	s	RES, CHIP 0	
R779	1-216-089-91	s	METAL, CHIP 47k 5% 1/10W	
R780	1-216-089-91	■	METAL, CHIP 47k 5% 1/10W	
R781	1-216-049-91	s	METAL, CHIP 1k 5% 1/10W	[for NTSC]
R782	1-216-049-91	s	METAL, CHIP 1k 5% 1/10W	[for NTSC]
R783	1-216-295-91	■	RES, CHIP 0	
R801-803	1-216-049-91	s	METAL, CHIP 1k 5% 1/10W	
R804-811	1-216-295-91	■	RES, CHIP 0	
R831-834	1-216-049-91	s	METAL, CHIP 1k 5% 1/10W	
R835	1-216-295-91	s	RES, CHIP 0	
R840	1-216-295-91	s	RES, CHIP 0	[for PAL]
R841	1-216-295-91	s	RES, CHIP 0	[for NTSC]
R861	1-216-295-91	s	RES, CHIP 0	[for NTSC]
R862	1-216-295-91	s	RES, CHIP 0	[for NTSC]
R865	1-216-295-91	s	RES, CHIP 0	[for NTSC]
R867	1-216-295-91	s	RES, CHIP 0	[for NTSC]
R870-878	1-216-295-91	s	RES, CHIP 0	
R901-903	1-216-049-91	s	METAL, CHIP 1k 5% 1/10W	

(RP-89/89A BOARD(ESBK-7041) board suffix number -12)

Ref. No. or Q'ty	Part No.	SP	Description	
R904-911	1-216-295-91	s	RES, CHIP 0	
R931-934	1-216-049-91	s	METAL, CHIP 1k 5% 1/10W	
R935	1-216-295-91	s	RES, CHIP 0	
R940	1-216-295-91	s	RES, CHIP 0	[for PAL]
R941	1-216-295-91	s	RES, CHIP 0	[for NTSC]
R961	1-216-295-91	s	RES, CHIP 0	[for NTSC]
R962	1-216-295-91	s	RES, CHIP 0	[for NTSC]
R965	1-216-295-91	■	RES, CHIP 0	[for NTSC]
R967	1-216-295-91	■	RES, CHIP 0	[for NTSC]
R970-978	1-216-295-91	s	RES, CHIP 0	
R1001	1-216-295-91	s	RES, CHIP 0	[for PAL]
R1002	1-216-295-91	s	RES, CHIP 0	[for PAL]
R1003	1-216-295-91	s	RES, CHIP 0	
R1004-1007	1-216-049-91	s	METAL, CHIP 1k 5% 1/10W	
R1008	1-216-295-91	s	RES, CHIP 0	[for NTSC]
R1009	1-216-295-91	s	RES, CHIP 0	[for NTSC]
R1010	1-216-049-91	s	METAL, CHIP 1k 5% 1/10W	
R1011	1-216-295-91	■	RES, CHIP 0	
R1012-1015	1-216-049-91	■	METAL, CHIP 1k 5% 1/10W	
R1017	1-216-295-91	s	RES, CHIP 0	
R1018	1-216-017-91	s	METAL, CHIP 47 5% 1/10W	
R1019	1-216-017-91	s	METAL, CHIP 47 5% 1/10W	
R1020	1-216-041-00	s	METAL, CHIP 470 5% 1/10W	
R1021	1-216-073-00	s	METAL, CHIP 10K 5% 1/10W	
R1022	1-216-017-91	■	METAL, CHIP 47 5% 1/10W	
R1023	1-216-065-00	s	METAL, CHIP 4.7K 5% 1/10W	
R1024	1-216-017-91	s	METAL, CHIP 47 5% 1/10W	
R1025	1-216-073-00	s	METAL, CHIP 10K 5% 1/10W	
R1026	1-216-295-91	s	RES, CHIP 0	
R1027-1029	1-216-049-91	s	METAL, CHIP 1k 5% 1/10W	
R1030	1-216-121-91	■	METAL, CHIP 1M 5% 1/10W	
R1031	1-216-049-91	s	METAL, CHIP 1k 5% 1/10W	
R1032	1-216-295-91	s	RES, CHIP 0	
R1033	1-216-049-91	s	METAL, CHIP 1k 5% 1/10W	
R1034-1036	1-216-049-91	s	METAL, CHIP 1k 5% 1/10W	
R1037	1-216-295-91	s	RES, CHIP 0	
R1041	1-216-041-00	s	METAL, CHIP 470 5% 1/10W	
R1042	1-216-073-00	s	METAL, CHIP 10K 5% 1/10W	
R1043	1-216-017-91	s	METAL, CHIP 47 5% 1/10W	
R1044	1-216-065-00	s	METAL, CHIP 4.7K 5% 1/10W	
R1045	1-216-017-91	s	METAL, CHIP 47 5% 1/10W	
R1046	1-216-073-00	s	METAL, CHIP 10K 5% 1/10W	
R1047-1057	1-216-295-91	s	RES, CHIP 0	
R1058-1060	1-216-025-91	■	METAL, CHIP 100 5% 1/10W	
R1061	1-216-295-91	s	RES, CHIP 0	[for NTSC]
R1062	1-216-295-91	s	RES, CHIP 0	
R1063	1-216-295-91	s	RES, CHIP 0	
R1069	1-216-295-91	s	RES, CHIP 0	
R1071	1-216-295-91	s	RES, CHIP 0	
R1073	1-216-295-91	■	RES, CHIP 0	

(RP-89/89A BOARD(ESBK-7041) board suffix number -12)

Ref. No. or Q'ty	Part No.	SP	Description	
R1076	1-216-295-91	s	RES, CHIP 0	
R1077	1-216-295-91	m	RES, CHIP 0	
R1078	1-216-295-91	s	RES, CHIP 0	
RB1-21	1-239-621-11	s	RESISTOR BLOCK, CHIP 22x4	
RB701-717	1-239-711-11	m	RESISTOR BLOCK, CHIP 0x4	
RB761	1-239-711-11	m	RESISTOR BLOCK, CHIP 0x4	[for PAL]
RB762	1-239-711-11	s	RESISTOR BLOCK, CHIP 0x4	[for PAL]
RB763	1-236-904-11	s	RESISTOR BLOCK, CHIP 1.0kx4	[for NTSC]
RB764	1-236-904-11	s	RESISTOR BLOCK, CHIP 1.0kx4	[for NTSC]
RB801-807	1-239-711-11	s	RESISTOR BLOCK, CHIP 0x4	
RB812	1-239-303-11	s	RESISTOR BLOCK, CHIP 1kx8	
RB813	1-239-303-11	s	RESISTOR BLOCK, CHIP 1kx8	
RB861	1-239-711-11	s	RESISTOR BLOCK, CHIP 0x4	[for PAL]
RB862	1-239-711-11	s	RESISTOR BLOCK, CHIP 0x4	[for PAL]
RB901-907	1-239-711-11	m	RESISTOR BLOCK, CHIP 0x4	
RB912	1-239-303-11	s	RESISTOR BLOCK, CHIP 1kx8	
RB913	1-239-303-11	s	RESISTOR BLOCK, CHIP 1kx8	
RB961	1-239-711-11	m	RESISTOR BLOCK, CHIP 0x4	[for PAL]
RB962	1-239-711-11	s	RESISTOR BLOCK, CHIP 0x4	[for PAL]

FRAME(ES-7)

Ref. No. or Q'ty	Part No.	SP	Description	
1pc	1-504-289-11	m	SPEAKER (5cm)	
1pc	⚠ 1-570-384-11	s	SWITCH, ROCKER (AC POWER)	
*1pc	1-589-861-11	o	BOARD, PC MAIN(P/I-P55TP4XE)	#1
*1pc	1-761-019-11	s	BOARD, PC MAIN	#2
1pc	1-589-888-11	o	BOARD, VGA	
4pcs	1-698-779-11	s	FAN, DC	
1pc	1-698-827-11	m	FAN, DC (WITH HEAT SINK)	
1pc	1-759-216-12	s	DRIVE, HARD DISK (3.5" 1GB)	
2pcs	1-777-295-11	o	CABLE, FLAT 40P, 0.45m (CD-ROM drive to SECONDARY/PC Main board) (Hard disk drive to PRIMARY/PC Main board)	
1pc	1-777-298-11	o	CABLE, FLAT 34P, 0.32m (Floppy disk drive to FLOPPY/PC Main board)	
1pc	1-777-296-11	o	CABLE, FLAT 25P, 0.2m (PRINTER connector/Rear panel to PRINTER/ PC Main board)	
2pcs	1-777-297-11	m	CABLE, FLAT 9P, 0.15m (COM1 connector/Rear panel to COM1/PC Main board) (COM2 connector/Rear panel to COM2/PC Main board)	
*1pc	8-749-012-23	s	IC S16265NHC	#1
*1pc	8-749-014-04	m	IC S32265NHC	#2
*1pc	8-759-379-37	s	IC A80502-66100	#1
*1pc	8-759-481-25	m	IC FV80502-66200	#2
CB1	⚠ 1-533-630-11	s	BREAKER, CIRCUIT 5A(for CE)	
CB1	⚠ 1-533-570-11	s	BREAKER, CIRCUIT 8A(for UC/J)	

HARNESS, SUB(5V PWR):
(CN4/RE-122 board to CN4/MB-639 board)
(CN14/RE-122 board to CN14/MB-639 board)

(to CN4 and CN14/MB-639 board)

CN4/14	1-563-888-11	m	HOUSING, VH 10P	
10pcs	1-562-210-11	o	CONTACT, FEMALE AWG18-22	

(to CN4 and CN14/RE-122 board)

CN4/14	1-563-888-11	o	HOUSING, VH 10P	
10pcs	1-562-210-11	m	CONTACT, FEMALE AWG18-22	

HARNESS, SUB(AC IN)
(CN21/RE-122 board to AC IN)

(to AC IN)

1pc	⚠ 1-251-506-11	o	FILTER, NOISE(for UC/J)	
1pc	⚠ 1-251-507-11	o	FILTER, NOISE(for CE)	

(to CN21/RE-122 board)

CN21	1-561-828-00	o	HOUSING, 3P	
2pcs	1-561-067-00	o	CONTACT, FEMALE AWG14-20	

HARNESS, SUB(AU-01):
(CN800/AU-217 board to CN800/CN-1237 board)
(CN801/AU-217 board to CN801/CN-1237 board)
(CN803/AU-217 board to CN803/CN-1237 board)
(CN804/AU-217 board to CN803/CN-1237 board)

4pcs	1-956-152-12	m	HARNESS, SUB (AU-01)	

HARNESS, SUB(AU-02):
(CN802/AU-217 board to CN802/CN-1237 board)

1pc	1-956-153-12	o	HARNESS, SUB (AU-02)	

HARNESS, SUB(AU-03):
(CN805/AU-217 board to CN805/CN-1238 board)

1pc	1-956-154-12	o	HARNESS, SUB (AU-03)	

(FRAME(ES-7))

Ref. No.
or Q'ty Part No. SP Description

HARNESS, SUB(BF):
(CN1/BF-54 board to CN3/MB-639 board)
1pc 1-956-150-11 o HARNESS, SUB (BF)

HARNESS, SUB (CD-ROM PWR):
(CN33/RE-122 board to CD-ROM Drive)

(to CN33/RE-122 board)
CN33 1-562-285-11 o HOUSING, 4P
4pcs 1-562-210-11 o CONTACT, FEMALE AWG18-22

(to CD-ROM Drive)
1-508-424-11 o HOUSING 4P, PLUG
4pcs 1-535-714-11 o CONTACT, FEMALE

HARNESS, SUB(DC PWR1)
(CN5/RE-122 board to CN5/MB-639 board)

(to CN5/RE-122 board)
CN5 1-562-640-11 o HOUSING, CONNECTOR 8P
8pcs 1-562-210-11 o CONTACT, FEMALE AWG18-22

(to CN5/MB-639 board)
CN5 1-562-640-11 o HOUSING, CONNECTOR 8P
8pcs 1-562-210-11 o CONTACT, FEMALE AWG18-22

HARNESS, SUB(DC PWR2)
(CN6/RE-122 board to CN6/MB-639 board)

(to CN6/RE-122 board)
CN6 1-561-520-00 o HOUSING, 10P
10pcs 1-560-372-00 o CONTACT, ILG, FEMALE

(to CN6/MB-639 board)
CN6 1-561-520-00 o HOUSING, 10P
10pcs 1-560-372-00 o CONTACT, ILG, FEMALE

HARNESS, SUB (FDD PWR):
(CN35/RE-122 board to Floppy Disk Drive)

(to CN35/RE-122 board)
CN35 1-562-211-11 o HOUSING, 3P
3pcs 1-562-210-11 o CONTACT, FEMALE AWG18-22

(to Floppy Disk Drive)
1-561-664-00 o CONNECTOR 4P, FEMALE
3pcs 1-560-006-00 o CONTACT, EI, FEMALE AWG20-26

HARNESS, SUB(FP):
(CN7/FP-74 board to CN7/MB-639 board)
1pc 1-956-151-11 o HARNESS, SUB (FP)

HARNESS, SUB (HDD PWR):
(CN34/RE-122 board to Hard Disk Drive)

(to CN34/RE-122 board)
CN34 1-562-285-11 o HOUSING, 4P
4pcs 1-562-210-11 o CONTACT, FEMALE AWG18-22

(to Hard Disk Drive)
1-508-424-11 o HOUSING 4P, PLUG
4pcs 1-535-714-11 o CONTACT, FEMALE

HARNESS, SUB (REF OUT):
(CN8/CN-1242 board to CN8/MB-639 board)

(to CN8/CN-1242 board)
CN8 1-561-519-00 o HOUSING, 8P
8pcs 1-560-372-00 o CONTACT, ILG, FEMALE

(FRAME(ES-7))

Ref. No.
or Q'ty Part No. SP Description

(to CN8/MB-639 board)
CN8 1-561-519-00 o HOUSING, 8P
8pcs 1-560-372-00 o CONTACT, ILG, FEMALE

HARNESS, SUB(PC PWR):
(CN31 and pin-1 of CN32/RE-122 board and to CPU P1/PC Main board)
(Pin-2 thru 7 of CN32/RE-122 board to CPU P2/PC Main board)

(to CN31/RE-122 board)
CN31 1-562-286-11 o HOUSING, 5P
5pcs 1-562-210-11 o CONTACT, FEMALE AWG18-22

(to CN32/RE-122 board)
CN32 1-562-833-11 o HOUSING, 7P
7pcs 1-562-210-11 o CONTACT, FEMALE AWG18-22

(to CPU P1/PC Main board)
CPU P1 1-778-620-11 o HOUSING, 6P
6pcs 1-778-621-11 o CONTACT, FEMALE AWG18-24

(to CPU P2/PC Main board)
CPU P2 1-778-620-21 o HOUSING, 6P
6pcs 1-778-621-11 o CONTACT, FEMALE AWG18-24

HARNESS, SUB(PWR SW):
(CN22/RE-122 board to POWER ON switch)

(to CN22/RE-122 board
CN22 1-561-863-00 o HOUSING, MATE-N 5P, PLUG
4pcs 1-561-067-00 o CONTACT, FEMALE AWG14-20

HARNESS, SUB(VPR1):
(CN5/VPR-18 board to CN1/MB-639 board)
1pc 1-956-148-11 o HARNESS, SUB (VPR1)

HARNESS, SUB(VPR3):
(CN1/DUS-27 board to CN2/MB-639 board)
1pc 1-957-091-11 o HARNESS, SUB (VPR3)

HARNESS, SUB(VPR4):
(CN2/DUS-27 board to CN4/VPR-18 board)
1pc 1-957-092-11 o HARNESS, SUB (VPR4)

5-4. PACKING MATERIAL & SUPPLIED ACCESSORIES

ES-7

Ref. No. or Q'ty	Part No.	SP	Description
1pc	⚠ 1-551-812-11	s	CORD, POWER 3P(for UC)
1pc	⚠ 1-557-161-11	s	CORD, POWER 2P(for J)
1pc	1-563-375-11	s	SHELL, D-SUB 9P
1pc	1-568-182-11	o	CONNECTOR, D-SUB 9P, MALE
1pc	⚠ 1-590-910-11	s	CORD, AC POWER 3P(for CE)
1pc	1-759-259-11	o	MOUSE
1pc	1-759-260-21	o	KEYBOARD ASSY (101)
1pc	1-777-294-11	s	CORD, CONNECTION
1pc	3-603-504-01	o	PACKAGE,OS (E)(for UC/CE)
1pc	2-603-505-01	o	PACKAGE,OS (J)(for J)
1pc	3-704-318-01	o	BAG, PROTECTION
1pc	3-856-429-03	s	MANUAL, INSTRUCTION (JAPANESE, FOR J)
1pc	⚠ 3-856-429-12	s	MANUAL, INSTRUCTION (ENGLISH, FOR UC/CE)
1pc	3-856-429-22	s	MANUAL, INSTRUCTION (FRENCH, FOR UC/CE)
1pc	3-856-429-33	s	MANUAL, INSTRUCTION (GERMAN, FOR CE)
1pc	3-856-429-41	s	MANUAL, INSTRUCTION (ITALIAN, FOR CE)
1pc	1-759-311-11	o	CD-ROM

ESBK-7021

Ref. No. or Q'ty	Part No.	SP	Description
1pc	3-856-431-02	s	MANUAL, INSTRUCTION

ESBK-7022

Ref. No. or Q'ty	Part No.	SP	Description
1pc	3-704-046-31	s	BAG,PREVENTION,ELECTRIFICATION
1pc	3-856-431-02	s	MANUAL, INSTRUCTION
6pcs	7-682-545-04	s	SCREW +B 3x4

ESBK-7023

Ref. No. or Q'ty	Part No.	SP	Description
1pc	3-856-431-02	s	MANUAL, INSTRUCTION

ESBK-7024

Ref. No. or Q'ty	Part No.	SP	Description
1pc	3-856-431-02	s	MANUAL, INSTRUCTION
9pcs	7-682-545-04	s	SCREW +B 3x4

ESBK-7031

Ref. No. or Q'ty	Part No.	SP	Description
1pc	3-856-431-02	s	MANUAL, INSTRUCTION

ESBK-7032

Ref. No. or Q'ty	Part No.	SP	Description
1pc	3-856-431-02	s	MANUAL, INSTRUCTION
5pcs	1-765-112-12	o	CABLE ASSY, COAXIAL
8pcs	7-682-947-01	s	SCREW +PSW 3x6

ESBK-7041

Ref. No. or Q'ty	Part No.	SP	Description
1pc	3-856-431-02	s	MANUAL, INSTRUCTION

ESBK-7071

Ref. No. or Q'ty	Part No.	SP	Description
1pc	1-759-312-11	o	CD-ROM
1pc	3-704-046-91	s	BAG,PREVENTION,ELECTRIFICATION
5pcs	7-682-947-01	s	SCREW +PSW 3x6

5-5. OPTIONAL FIXTURE

Part No.	SP	Description
J-6381-380-A	o	CABLE, VIDEO(S-BNC)
J-6441-950-A	o	EXTENSION BOARD, EX-488
J-6442-500-A	o	EXTENSION BOARD, EX-619